Birla Central Library
PILANI (Rajasthan)
Class No :- 621·38
Book No :- S234I
Accession No :- 39488

# AN INTRODUCTION TO THE THEORY AND DESIGN OF ELECTRIC WAVE FILTERS

# AN INTRODUCTION TO THE THEORY AND DESIGN OF

# ELECTRIC WAVE FILTERS

*By*

F. SCOWEN

B.Sc., A.Inst.P.

*Post Office Research Station*

*With a Foreword by*

SIR ARCHIBALD J. GILL

B.Sc., M.I.E.E., F.I.R.E.

*Engineer-in-Chief,*

*British Post Office, Engineering Department*

SECOND EDITION REVISED

LONDON

CHAPMAN & HALL LTD

37 ESSEX STREET W.C.2

1950

*First published, 1945*
*Second edition, 1950*

CATALOGUE NO. 294/4

Printed in Great Britain by Butler & Tanner Ltd., Frome and London
Bound by G. & J. Kitcat Ltd. Flexiback Binding.

# FOREWORD

The author has asked me to write a foreword to this little work on filters.

The subject is one which the author is well qualified to expound, as he has been actively engaged on the design of filters of the types described in this book.

The wave filter, like the loading of cables, although developed in America, originated in conception in this country.

The possibility of devising low-pass and high-pass filters by the appropriate association of capacitances and inductances was suggested by Mr. G. M. B. Shepherd of the Post Office Engineering Department in a communication to *The Electrician*, June 13, 1913. The mathematical development of the theory of such devices, however, was carried out at a later date by the technicians of the Bell Telephone Laboratories of America.

The use of filters is becoming of increasing importance in all branches of telecommunications and the latest development in this art lies in the utilization of piezo electric quartz plates as elements in such devices with a resulting gain in compactness, stability and performance.

The present work should constitute a useful aid to the student and the designer in the approach of this rather specialized subject.

A. J. GILL.

*April 1945.*

# PREFACE TO FIRST EDITION

Electric wave filters have become increasingly important in the past twenty years, and all communication engineers should have a knowledge of the theory on which their design is based. It is an advantage if engineers are able to design their own filters, and are able to realize the point at which a filter should be handed over to a specialist in, for example, crystal filters. The theory of the ladder-type filter is described in some detail, and a method of design is put forward which should enable a large number of filters to be designed. The theory of the lattice-type filter is dealt with in a brief manner, as are the developments due to Cauer and the design of crystal filters. It is considered that the ladder-type filter offers more possibilities to the non-specialist than does the lattice-type filter, as the computing is likely to be less, and the adjustment of the components is more easily carried out, the tolerances being wider in the case of the ladder-type filter than in the lattice-type filter.

It is not intended that this book should replace the standard works on this subject, such as the original articles of Zobel, or the text-books written by Guillemin, Shea, Starr, and others. A bibliography of useful books and articles may encourage engineers to extend their reading on the subject of wave filters to these important works.

The theory of the electric wave filter was first published by Zobel. This was followed by such authors as Bode, Guillemin, Laurent, Shea and Starr, to all of whom the author wishes to express his thanks. His acknowledgement is also made to the Editors of the *Bell System Technical Journal* and to the Editor of *Ericsson Review* for their permission to use the work of those authors which appear in these Journals, and on which this book is largely based.

It is hoped that this book may encourage the publication of recent advances which have been made in the subject of electric wave filters. Too few articles are published on this subject, on which much work is being done. A pooling of ideas will do much to increase the rate of progress into this interesting and important subject.

The author will be grateful for the bringing to his notice any errors that may have slipped through unnoticed, and for any

criticisms or suggestions that may arise on putting into practice the methods described herein. Finally, the author wishes to express his thanks to his colleagues who have helped him by their criticisms and suggestions, and in particular to Mr. W. H. B. Cooper; and to the Post Office Engineering Department for permission to use certain material which has been developed therein.

F. SCOWEN.

## PREFACE TO SECOND EDITION

The author thanks those of his readers who have told him of errors they found in the first edition; these errors have now been corrected.

A Section has been added in this second edition; it describes Darlington's insertion-loss method of filter design. This method calls for a much greater effort from the designer than does the image parameter design method, but the results obtained by the new method are well worth the extra work. The author thinks that Darlington has made the most important advance in filter theory and design technique since the publication of Zobel's original work, and he hopes that his introduction to Darlington's method of filter design will give a new and powerful tool to the filter designer.

F. SCOWEN.

# CONTENTS


1. MATHEMATICAL INTRODUCTION . . . *Page* 1
   - 1.1. Quadratic equations . . . . . 1
   - 1.2. Relations between coefficients and roots of an equation. . . . . 1
   - 1.3. Determinants . . . . . 1
   - 1.3.1. Simultaneous equations of the first degree . 2
   - 1.4. Some algebraic symbols . . . . . 3
   - 1.5. Arithmetic and geometric progressions . . 3
   - 1.6. Exponential and logarithmic functions . . 4
   - 1.6.1. Circular functions . . . . . 5
   - 1.6.2. Hyperbolic functions . . . . . 7
   - 1.6.3. Inverse functions . . . . . 8
   - 1.7. Complex numbers . . . . . 11
   - 1.8. Examples on manipulation of complex numbers . 13
   - 1.9. The use of complex numbers in electrical calculations 15

2. ELECTRICAL INTRODUCTION . . . . . 20
   - 2.1. Current potential difference and resistance . . 20
   - 2.2. Kirchhoff's laws . . . . . 21
   - 2.3. Maxwell's cyclic currents . . . . . 23
   - 2.4. Thévenin's theorem . . . . . 26

3. INTRODUCTION TO THE LADDER NETWORK . 28

4. CONSTANT-$k$ SECTIONS . . . . . 31

5. THE WAVE FILTER . . . . . 32

6. $m$-DERIVATION . . . . . 35
   - 6.1. Mid-series derivation . . . . . 35
   - 6.2. Mid-shunt derivation . . . . . 36
   - 6.3. $mm'$ derivation . . . . . 37

7. EQUIVALENT NETWORKS . . . . . 39

8. INSERTION CHARACTERISTICS . . . . . 41

9. LOW-PASS FILTER HALF-SECTIONS . . . . . 45
   - 9.1. $m$-derived half-sections. . . . . 46

10. HIGH-PASS FILTER HALF-SECTIONS. . . . . 49
   - 10.1. $m$-derived half-sections . . . . . 50

11. BAND-PASS FILTER HALF-SECTIONS . . *Page* 52
11.1. $m$-derived half-sections . . . . . 55
11.2. $m_1m_2$-derived half-sections . . . . . 56
11.2.1. 5-element half-sections . . . . . 57
11.2.2. 4-element half-sections . . . . . 57
11.2.3. 3-element half-sections . . . . . 59
11.3. Relationships between band-pass half-sections . 60
11.4. Impedance transformation . . . . . 61

12. BAND-STOP FILTER HALF-SECTIONS . . . . 62
12.1. $m$-derived half-sections . . . . . 64

13. EFFECT OF DISSIPATION IN COMPONENTS OF A FILTER . . . . . 66

14. CALCULATION OF IMAGE ATTENUATION AND PHASE-SHIFT COEFFICIENTS, DISSIPATION LOSS AND INSERTION LOSS BY THE HELP OF TEMPLATES 72
14.1. Templates for image attenuation and phase-shift coefficients . . . . . 72
14.1.1. Low-pass half-sections . . . . . 75
14.1.2. High-pass half-sections . . . . . 76
14.1.3. Band-pass half-sections (symmetrical) . . 77
14.1.4. Band-pass half-sections (4-element dissymmetrical) 78
14.1.5. Band-stop half-sections . . . . . 80
14.2. Image impedance . . . . . 82

15. PARALLEL OR SERIES CONNECTION OF FILTERS 85

16. EXAMPLES OF LADDER-TYPE FILTER DESIGN . 92
16.1. Low-pass and high-pass filter . . . . . 93
16.2. Band-pass filter . . . . . 104
16.3. Parallel or series connection of filters . . 115
16.3.1. Fractional terminating of paralleled filters (Zobel) 115
16.3.2. Impedance correction applied to paralleled filters (Bode) . . . . . 117
16.4. Example of calculation of insertion-loss and phase-shift . . . . . 118

17. LATTICE NETWORKS . . . . . 120
17.1. Cauer lattice filters . . . . . 126
17.2. Crystal filters . . . . . 129
17.3. Insertion characteristics of lattice-type filter networks . . . . . 132

18. PRACTICAL CONSIDERATIONS IN FILTER CONSTRUCTION . . . . . *Page* 135
18.1. Balanced filters . . . . . 137
18.2. Unbalanced filters . . . . . 138
18.3. Components . . . . . 143
18.3.1. Capacitors . . . . . 143
18.3.2. Inductors . . . . . 144
18.3.2.1. Air-cored inductors . . . . . 144
18.3.2.2. Inductors with magnetic cores . . . 148
18.4. Measurement and adjustment of components . 150
18.4.1. Capacitors . . . . . 150
18.4.2. Inductors . . . . . 151
18.4.3. Adjustment of components in a filter . . 152
18.5. Choice of filter configuration . . . . . 152

19. MEASUREMENTS ON ACTUAL FILTERS . . . 153

20. THE DESIGN OF FILTERS ON AN INSERTION-LOSS BASIS . . . . . 158
20.1. The choice of an insertion-loss characteristic meeting the design requirements . . . 158
20.2. Allowance for dissipation . . . . . 164
20.3. Determination of open- and short-circuit impedances . . . . . 165
20.4. Determination of the values of the network components from $Z_f$ and $Z_c$ . . . . . 167
20.5. The design of high-pass, band-pass and band-stop networks . . . . . 169
20.6. Orchard's modification to Darlington's method . 171
20.7. Example. The design of a low-pass filter . . 173
20.8. Determination of the zeros of a polynomial . 179

BIBLIOGRAPHY . . . . . 183

INDEX . . . . . 185

# 1. MATHEMATICAL INTRODUCTION.

In order to understand this study of electric wave filters, some mathematical knowledge is essential. Some of this knowledge is elementary, and has been stated below with little or no proof. Some is, however, not considered to be so elementary, and as it is of great importance in the development of electric circuit theory, it is dealt with in some detail.

## 1.1. Quadratic Equations.

$$ax^2+bx+c = 0$$

has roots given by $$x = \frac{-b \pm \sqrt{b^2 - 4ac}}{2a} \quad . \quad . \quad . \quad 1(i)$$

If $b^2 > 4ac$, there are two real roots.
If $b^2 = 4ac$, there is only one root.
If $b^2 < 4ac$, there are two complex roots (see **1.9**).

**1.2. Relations between Coefficients and Roots of an Equation.** If any equation is written so that the coefficient of the highest term is unity, then

(*a*) the sum of the roots is equal to the coefficient of the second highest term with its sign changed,

(*b*) the sum of the products of the roots taken two at a time is equal to the coefficient of the third highest term,

(*c*) the sum of the products of the roots taken three at a time is equal to the coefficient of the fourth highest term with its sign changed,

and so on; e.g., if

$$ax^3+bx^2+cx+d = 0$$

has roots $\alpha$, $\beta$, $\gamma$,

$$\left.\begin{aligned} -\frac{b}{a} &= \alpha+\beta+\gamma \\ \frac{c}{a} &= \alpha\beta+\beta\gamma+\gamma\alpha \\ -\frac{d}{a} &= \alpha\beta\gamma \end{aligned}\right\} \quad . \quad . \quad . \quad 1(ii)$$

**1.3. Determinants.** The quantity $\begin{vmatrix} a_1 & a_2 \\ b_1 & b_2 \end{vmatrix}$ is called a determinant of the second order and is equal to the quantity $(a_1b_2 - a_2b_1)$.

The quantity

$$\begin{vmatrix} a_1 & a_2 & a_3 \\ b_1 & b_2 & b_3 \\ c_1 & c_2 & c_3 \end{vmatrix}$$

is called a determinant of the third order and is equal to

$$a_1 \begin{vmatrix} b_2 & b_3 \\ c_2 & c_3 \end{vmatrix} - a_2 \begin{vmatrix} b_1 & b_3 \\ c_1 & c_3 \end{vmatrix} + a_3 \begin{vmatrix} b_1 & b_2 \\ c_1 & c_2 \end{vmatrix}$$

The quantity

$$\begin{vmatrix} a_1 & a_2 & a_3 & a_4 \\ b_1 & b_2 & b_3 & b_4 \\ c_1 & c_2 & c_3 & c_4 \\ d_1 & d_2 & d_3 & d_4 \end{vmatrix}$$

is called a determinant of the fourth order and is equal to

$$a_1 \begin{vmatrix} b_2 & b_3 & b_4 \\ c_2 & c_3 & c_4 \\ d_2 & d_3 & d_4 \end{vmatrix} - a_2 \begin{vmatrix} b_1 & b_3 & b_4 \\ c_1 & c_3 & c_4 \\ d_1 & d_3 & d_4 \end{vmatrix} + a_3 \begin{vmatrix} b_1 & b_2 & b_4 \\ c_1 & c_2 & c_4 \\ d_1 & d_2 & d_4 \end{vmatrix} - a_4 \begin{vmatrix} b_1 & b_2 & b_3 \\ c_1 & c_2 & c_3 \\ d_1 & d_2 & d_3 \end{vmatrix}$$

and so on for determinants of higher orders.

If two rows (or columns) are identical, or differ only by a common multiplier, the determinant is zero.

If two rows (or columns) are interchanged, the magnitude of the determinant remains unaltered, but the sign is changed.

The elements of any row (or column) may be added to, or subtracted from, the corresponding elements of any other row (or column) without altering the value of the determinant.

**1.3.1. Simultaneous Equations of the First Degree.** If we have $n$ independent equations involving $n$ unknowns, there is only one set of values for the unknown quantities which will satisfy all of the $n$ equations. By taking the $n$ equations in $(n-1)$ different pairs, we may eliminate in each pair one of the variables, leaving $(n-1)$ independent equations involving $(n-1)$ unknowns. Successive elimination enables us to calculate the value of one of the unknowns. A similar process enables the remaining $(n-1)$ unknowns to be calculated. By the help of determinants the result may be written down direct.

For example,

$$\left.\begin{aligned} a_1x+a_2y+a_3 &= 0 \\ b_1x+b_2y+b_3 &= 0 \end{aligned}\right\}$$

has as solution

$$\left.\frac{x}{\begin{vmatrix} a_2 & a_3 \\ b_2 & b_3 \end{vmatrix}} = \frac{-y}{\begin{vmatrix} a_1 & a_3 \\ b_1 & b_3 \end{vmatrix}} = \frac{1}{\begin{vmatrix} a_1 & a_2 \\ b_1 & b_2 \end{vmatrix}}\right\} \quad . \quad . \quad 1(\text{iii})$$

and
$$\left.\begin{aligned} a_1x+a_2y+a_3z+a_4 &= 0 \\ b_1x+b_2y+b_3z+b_4 &= 0 \\ c_1x+c_2y+c_3z+c_4 &= 0 \end{aligned}\right\}$$
has as solution
$$\left.\frac{x}{\begin{vmatrix} a_2 & a_3 & a_4 \\ b_2 & b_3 & b_4 \\ c_2 & c_3 & c_4 \end{vmatrix}} = \frac{-y}{\begin{vmatrix} a_1 & a_3 & a_4 \\ b_1 & b_3 & b_4 \\ c_1 & c_3 & c_4 \end{vmatrix}} = \frac{z}{\begin{vmatrix} a_1 & a_2 & a_4 \\ b_1 & b_2 & b_4 \\ c_1 & c_2 & c_4 \end{vmatrix}} = \frac{-1}{\begin{vmatrix} a_1 & a_2 & a_3 \\ b_1 & b_2 & b_3 \\ c_1 & c_2 & c_3 \end{vmatrix}}\right\} \quad . \quad 1(\text{iv})$$
and so on.

**1.4. Some Algebraic Symbols.** $n!$ or $\lfloor n$ (factorial $n$) is used to express the product of the integers 1, 2, 3 . . . $n$, and we may write
$$n! \equiv \lfloor n \equiv 1.2.3. \ . \ . \ . \ (n-1).n$$
and
$$0! = 1.$$

$\Sigma$ (sigma) is used to express the sum of a number of similar terms, e.g.
$$\sum_{r=0}^{r=n} a_r x^r \equiv a_0 + a_1x + a_2x^2 + \ . \ . \ . \ + a_nx^n.$$

$\Pi$ (pi) is used to express the product of a number of similar terms, e.g.
$$\prod_{r=0}^{r=n} a_r x^r \equiv a_0 \times a_1x \times a_2x^2 \times \ . \ . \ . \ \times a_nx^n.$$

**1.5. Arithmetic and Geometric Progressions.** The terms of the series
$$a,\ a+b,\ a+2b,\ a+3b,\ . \ . \ .$$
are said to be in Arithmetic Progression (A.P.). The $r$th term is $a+(r-1)b$.

The sum of the first $n$ terms is written as
$$\left.\begin{aligned} \sum_{r=1}^{r=n}(a+r-1b) &= a+(a+b)+(a+2b)+ \ . \ . \ . \ +(a+n-1b) \\ &= an+\frac{n(n-1)}{2}b \end{aligned}\right\} \quad . \quad 1(\text{v})$$

The terms of the series
$$a,\ ab,\ ab^2,\ ab^3,\ . \ . \ .$$
are said to be in Geometric Progression (G.P.). The $r$th term is $ab^{(r-1)}$.

The sum of the first $n$ terms is written as

$$\left.\begin{aligned}\sum_{r=1}^{r=n} ab^{(r-1)} &= a+ab+ab^2+\ .\ .\ .\ +ab^{(n-1)}\\ &= \frac{a(b^n-1)}{b-1}\end{aligned}\right\} \quad . \quad 1(\text{vi})$$

If $b$ lies between $-1$ and $+1$ the sum of the first $n$ terms approaches a finite value as $n$ increases, and in the limit, when an infinite number of terms is taken

$$\sum_{r=1}^{r=\infty} ab^{(r-1)} = \frac{a}{1-b} \quad . \quad . \quad . \quad 1(\text{vii})$$

**1.6. Exponential and Logarithmic Functions.**

$$\left.\begin{aligned}\sum_{r=0}^{r=}\left(\frac{1}{r!}\right) &= \frac{1}{0!}+\frac{1}{1!}+\frac{1}{2!}+\ .\ .\ .\\ &= 1+\frac{1}{1!}+\frac{1}{2!}+\ .\ .\ .\\ &= 2{\cdot}71828\ .\ .\ .\\ &= \varepsilon\ (\text{epsilon})\end{aligned}\right\} \quad . \quad . \quad 1(\text{viii})$$

and

$$\left.\begin{aligned}\sum_{r=0}^{r=\infty}\left(\frac{x^r}{r!}\right) &= 1+x+\frac{x^2}{2!}+\ .\ .\ .\\ &= \varepsilon^x\\ &= \exp(x)\end{aligned}\right\} \quad . \quad . \quad 1(\text{ix})$$

$$\frac{d}{dx}\varepsilon^{kx} = k\varepsilon^{kx}$$

where $k$ is a constant.

The logarithm of a number to any base is the power to which the base must be raised to give the number. If $N$ is the number and $B$ the base, the logarithm of $N$ to the base $B$ is written as $\log_B N$, and if this is equal to $L$,

$$B^L = N \quad . \quad . \quad . \quad . \quad 1(\text{x})$$

$$\left.\begin{aligned}\log_B MN &= \log_B M+\log_B N\\ \log_B M/N &= \log_B M-\log_B N\\ \log_B M^n &= n\log_B M\\ \log_B M &= \log_A M\times\log_B A\end{aligned}\right\} \quad . \quad . \quad 1(\text{xi})$$

The most usual bases are 10 and $\varepsilon$. As in the majority of tables the base is 10 and the base $\varepsilon$ occurs in many expressions, the last result of 1(xi) is of use, for

$$\left.\begin{aligned} \log_e M &= \log_{10} M \times \log_e 10 \\ &= 2{\cdot}3026 \log_{10} M \\ \text{and} \qquad \log_{10} M &= (\log_e M)/2{\cdot}3026 \\ &= 0{\cdot}43429 \log_e M \end{aligned}\right\} \quad . \quad . \quad 1(\text{xii})$$

$$\frac{d}{dx} \log_e x = \frac{1}{x} \quad . \quad . \quad . \quad . \quad 1(\text{xiii})$$

**1.6.1. Circular Functions.** Angles may be measured in degrees or radians. If a line of unit length is rotated in a plane, about one end, it sweeps over 360 degrees (360°) when it returns to its original position. The end travels a distance of $2\pi$ and the angle swept through when it has returned to its original position is $2\pi$ radians. When the rotating line has moved $\frac{1}{n}$th of the 360° or $2\pi$ radian sweep, the angle between the original and final positions is $\frac{360°}{n}$ or $\frac{2\pi}{n}$ radians.

Thus

$$\left.\begin{aligned} 360° &= 2\pi \text{ radians} \\ 180° &= \pi \text{ radians} \\ 90° &= \pi/2 \text{ radians} \end{aligned}\right\} \quad . \quad . \quad . \quad 1(\text{xiv})$$

and so on; also

$$\left.\begin{aligned} 1 \text{ radian} &= \frac{360°}{2\pi} \\ &= 57{\cdot}296° \end{aligned}\right\} \quad . \quad . \quad . \quad 1(\text{xv})$$

If a line of unit length is turned about one end through an angle of $\theta$ (theta), and if from the moving end of the line a perpendicular is dropped on to its original direction, the length of the perpendicular between the end of the line and the original direction is known as the sine of the angle, and is written as $\sin\theta$. The length along the original direction, between the fixed end of the line and the foot of the perpendicular is equal to the cosine of the angle, and is written as $\cos\theta$. Other relationships are obtained from these. These are known as the tangent (tan), secant (sec), cosecant (cosec), and cotangent (cot), and are defined as

$$\left.\begin{aligned} \tan\theta &= \frac{\sin\theta}{\cos\theta} \\ \sec\theta &= \frac{1}{\cos\theta} \\ \operatorname{cosec}\theta &= \frac{1}{\sin\theta} \\ \cot\theta &= \frac{1}{\tan\theta} \end{aligned}\right\} \quad . \quad . \quad . \quad 1(\text{xvi})$$

The original direction, the line of unit length, and the perpendicular form a right-angled triangle, whose sides adjacent to the right-angle are of length $\sin\theta$ and $\cos\theta$, and whose hypotenuse is of unit length. Hence

$$\sin^2\theta+\cos^2\theta = 1 \qquad \text{1(xvii)}$$

It can be shown that

$$\left.\begin{aligned}\sin(A\pm B) &= \sin A\cos B\pm\cos A\sin B\\ \cos(A\pm B) &= \cos A\cos B\mp\sin A\sin B\\ \tan(A\pm B) &= \frac{\tan A\pm\tan B}{1\mp\tan A\tan B}\end{aligned}\right\} \qquad \text{1(xviii)}$$

and that

$$\left.\begin{aligned}\frac{d}{d\theta}\sin\theta &= \cos\theta\\ \frac{d}{d\theta}\cos\theta &= -\sin\theta\end{aligned}\right\} \qquad \text{1(xix)}$$

where $\theta$ is the angle in radians.

It is also possible to show that

$$\left.\begin{aligned}\sin\theta &= \theta-\frac{\theta^3}{3!}+\frac{\theta^5}{5!}-\ldots\\ \text{and}\qquad \cos\theta &= 1-\frac{\theta^2}{2!}+\frac{\theta^4}{4!}-\frac{\theta^6}{6!}+\ldots\end{aligned}\right\} \qquad \text{1(xx)}$$

from which it will be noticed that $\sin\theta$ is an odd power series in $\theta$, and if for $\theta$ we write $-\theta$,

$$\sin(-\theta) = -\sin\theta$$

whereas $\cos\theta$ is an even power series in $\theta$, and if for $\theta$ we write $-\theta$,

$$\cos(-\theta) = \cos\theta.$$

If we write $j=\sqrt{-1}$, then $j^2=-1$, $j^3=j^2\times j=-j$, $j^4=j^2\times j=-j\times j=+1$, and from 1(ix)

$$\begin{aligned}\varepsilon^{j\theta} &= 1+j\theta+\frac{j^2\theta^2}{2!}+\frac{j^3\theta^3}{3!}+\frac{j^4\theta^4}{4!}+\ldots\\ &= 1+j\theta-\frac{\theta^2}{2!}-\frac{j\theta^3}{3!}+\frac{\theta^4}{4!}\ldots\\ &= \left(1-\frac{\theta^2}{2!}+\frac{\theta^4}{4!}-\frac{\theta^6}{6!}+\ldots\right)\\ &\quad +j\left(\theta-\frac{\theta^3}{3!}+\frac{\theta^5}{5!}-\ldots\right)\\ &= \cos\theta+j\sin\theta \text{ from 1(xx).}\end{aligned}$$

In a similar way we may show that

$$\varepsilon^{-j\theta} = \cos\theta-j\sin\theta.$$

These two last results may be combined in

$$\varepsilon^{\pm j\theta} = \cos\theta \pm j\sin\theta \qquad . \quad . \quad . \quad 1(\text{xxi})$$

From the two results expressed in 1(xxi) addition and subtraction give

$$\left.\begin{aligned} \cos\theta &= \frac{1}{2}(\varepsilon^{j\theta}+\varepsilon^{-j\theta}) \\ \sin\theta &= \frac{1}{2j}(\varepsilon^{j\theta}-\varepsilon^{-j\theta}) \end{aligned}\right\} \quad . \quad . \quad . \quad 1(\text{xxii})$$

with similar results for the other circular functions. From 1(xxii) any of the relationships between the circular functions may be obtained.

It will also be seen that

$$(\cos\theta \pm j\sin\theta)^n = \varepsilon^{\pm jn\theta} = \cos n\theta \pm j\sin n\theta \qquad . \quad 1(\text{xxiii})$$

This result is known as Demoivre's Theorem.

**1.6.2. Hyperbolic Functions.** A second series of functions, known as Hyperbolic Functions, is obtained by eliminating the $j$'s in the exponential expressions for the circular functions. These functions are known as the hyperbolic sine, hyperbolic cosine, etc., and are written as sinh, cosh, etc. They are defined as

$$\left.\begin{aligned} \cosh\theta &= \tfrac{1}{2}(\varepsilon^{\theta}+\varepsilon^{-\theta}) \\ \sinh\theta &= \tfrac{1}{2}(\varepsilon^{\theta}-\varepsilon^{-\theta}) \\ \tanh\theta &= \frac{\sinh\theta}{\cosh\theta} \\ \operatorname{sech}\theta &= \frac{1}{\cosh\theta} \\ \operatorname{cosech}\theta &= \frac{1}{\sinh\theta} \\ \operatorname{cotanh}\theta &= \frac{1}{\tanh\theta} \end{aligned}\right\} \quad . \quad . \quad . \quad 1(\text{xxiv})$$

It may be shown that

$$\left.\begin{aligned} \cosh\theta \pm \sinh\theta &= \varepsilon^{\pm\theta} \\ (\cosh\theta \pm \sinh\theta)^n &= \varepsilon^{\pm n\theta} = \cosh n\theta \pm \sinh n\theta \\ \cosh^2\theta - \sinh^2\theta &= 1 \\ \cosh(A \pm B) &= \cosh A\cosh B \pm \sinh A\sinh B \\ \sinh(A \pm B) &= \sinh A\cosh B \pm \cosh A\sinh B \\ \tanh(A \pm B) &= \frac{\tanh A \pm \tanh B}{1 \pm \tanh A\tanh B} \\ \frac{d}{d\theta}\cosh\theta &= \sinh\theta \\ \frac{d}{d\theta}\sinh\theta &= \cosh\theta \end{aligned}\right\} \quad . \quad 1(\text{xxv})$$

We shall use two of the relations which exist between the hyperbolic functions of $\theta$ and $\theta/2$ which are proved below.

$$\begin{aligned}\cosh\theta &= \tfrac{1}{2}(\varepsilon^{\theta}+\varepsilon^{-\theta})\\ &= \tfrac{1}{2}[\varepsilon^{\theta}-2+\varepsilon^{-\theta}+2]\\ &= 1+\tfrac{1}{2}(\varepsilon^{\theta/2}-\varepsilon^{-\theta/2})^2\\ &= 1+2\left[\frac{\varepsilon^{\theta/2}-\varepsilon^{-\theta/2}}{2}\right]^2\\ &= 1+2\sinh^2\frac{\theta}{2} \qquad . \quad . \quad . \quad 1(\text{xxvi})\end{aligned}$$

and
$$\tanh 2\theta = \frac{\tanh\theta+\tanh\theta}{1+\tanh^2\theta}$$

which, on writing $\theta$ for $2\theta$, becomes

$$\tanh\theta = \frac{2\tanh\theta/2}{1+\tanh^2\theta/2} \qquad . \quad . \quad . \quad 1(\text{xxvii})$$

There are relationships between the hyperbolic functions of a quantity multiplied by $j$ and the circular functions of the same quantity, and vice versa, as may be seen by writing $j\theta$ for $\theta$ in say 1(xxiv) and comparing the resulting forms with 1(xxii). They are as follows

$$\left.\begin{aligned}\sinh j\theta &= j\sin\theta & \sin j\theta &= j\sinh\theta\\ \cosh j\theta &= \cos\theta & \cos j\theta &= \cosh\theta\\ \tanh j\theta &= j\tan\theta & \tan j\theta &= j\tanh\theta\end{aligned}\right\} \quad . \quad 1(\text{xxviii})$$

It is now possible to express circular or hyperbolic functions of a quantity of the form $(A\pm jB)$ in somewhat simpler forms.

For example

$$\left.\begin{aligned}\sinh(A\pm jB) &= \sinh A\cosh jB\pm\cosh A\sinh jB\\ &= \sinh A\cos B\pm j\cosh A\sin B\\ \cosh(A\pm jB) &= \cosh A\cosh jB\pm\sinh A\sinh jB\\ &= \cosh A\cos B\pm j\sinh A\sin B\end{aligned}\right\} \quad . \quad 1(\text{xxix})$$

**1.6.3. Inverse Functions.** There exist also inverse circular and hyperbolic functions written in the form $\sin^{-1}$, $\cos^{-1}$, etc., and $\sinh^{-1}$, $\cosh^{-1}$, etc. They are defined as shown below.

If
$$\sin\theta = s,\ \theta = \sin^{-1}s$$
$$\cos\theta = c,\ \theta = \cos^{-1}c$$
etc.
$$\sinh\theta = sh,\ \theta = \sinh^{-1}sh$$
$$\cosh\theta = ch,\ \theta = \cosh^{-1}ch$$
etc.

Tables are available for all these functions, and for the inverse functions. There is probably no need to deal further with the

ircular functions, but as the hyperbolic functions are not well nown, some general notes will not be out of place.

Fig. 1 shows the graphs of the three principal hyperbolic functions f a real positive quantity. When hyperbolic functions of a nega-

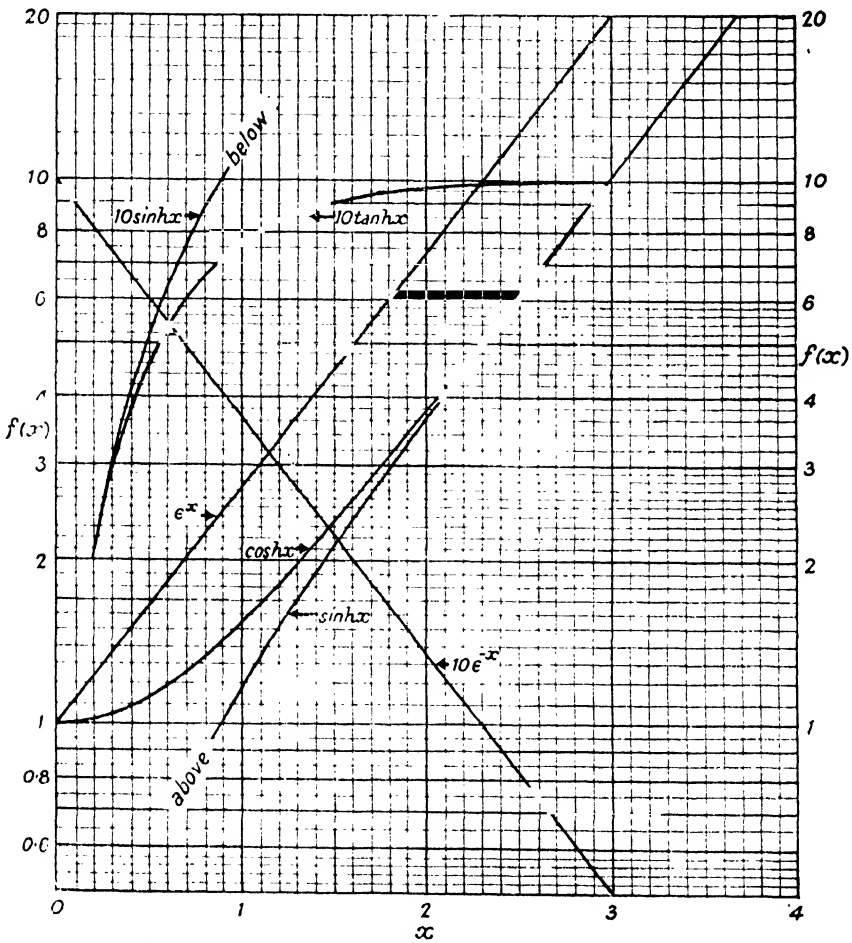


FIG. 1.—Exponential and Hyperbolic Functions of Positive Real Variable.

tive quantity are required, the following relationships should be noted.

$$\cosh(-\theta) = \cosh\theta$$
$$\sinh(-\theta) = -\sinh\theta$$
$$\tanh(-\theta) = -\tanh\theta.$$

In addition, it should also be noted that the hyperbolic cosine of a real quantity is always greater than or equal to 1, and that

the hyperbolic tangent of a real quantity lies between $-1$ and $+1$. Also, when $\theta$ is large, $\cosh\theta = \sinh\theta = \frac{1}{2}\exp(\theta)$.

The hyperbolic functions of any real quantity may be calculated from the equations given in 1(xxiv), using a table of natural logs.

For example, we will now determine $\cosh 0{\cdot}6$. From 1(xxiv) this is given by

$$\begin{aligned}\cosh 0{\cdot}6 &= \tfrac{1}{2}[\exp(0{\cdot}6)+\exp(-0{\cdot}6)]\\ &= \frac{1}{2}\left[\exp(0{\cdot}6)+\frac{1}{\exp(0{\cdot}6)}\right]\end{aligned}$$

Now if
$$\begin{aligned}N &= \exp(0{\cdot}6)\\ \log_\varepsilon N &= 0{\cdot}6\end{aligned}$$

and $N$ $(= \exp(0{\cdot}6))$ is the number whose natural logarithm is $0{\cdot}6$. From the body of a table of natural logs. we find that $N$ is equal to $1{\cdot}822$. If no natural log. tables are available, we may use common logs. and the relationship 1(xii)

$$\log_B M = \log_A M \times \log_B A$$

whence
$$\begin{aligned}\log_{10} N &= \log_\varepsilon N \times \log_{10}\varepsilon\\ &= \log_\varepsilon N \times 0{\cdot}43429\\ &= 0{\cdot}6 \times 0{\cdot}43429\\ &= 0{\cdot}26057\end{aligned}$$

and from a table of common antilogs. we find that $N$ is equal to $1{\cdot}822$.

Thus
$$\begin{aligned}\cosh 0{\cdot}6 &= \tfrac{1}{2}(1{\cdot}822+1/1{\cdot}822)\\ &= \tfrac{1}{2}(1{\cdot}822+0{\cdot}549)\\ &= 1{\cdot}186\end{aligned}$$

In order to use tables of logarithms to determine the values of inverse hyperbolic functions, some preliminary work is necessary.

Now
$$\begin{aligned}\sinh\theta &= \tfrac{1}{2}(\varepsilon^\theta - \varepsilon^{-\theta})\\ &= sh\end{aligned}$$

Then
$$\varepsilon^\theta - 2sh - \varepsilon^{-\theta} = 0$$

and
$$\varepsilon^{2\theta} - 2sh.\varepsilon^\theta - 1 = 0 \quad (\text{as } \varepsilon^\theta \neq 0)$$

which is a quadratic equation in $\varepsilon^\theta$. Hence, from 1(i)

$$\begin{aligned}\varepsilon^\theta &= \frac{2sh \pm \sqrt{(4sh^2+4)}}{2}\\ &= sh \pm \sqrt{(sh^2+1)}\end{aligned}$$

and
$$\theta = \log_\varepsilon[sh \pm \sqrt{(sh^2+1)}]$$

which we may write as

$$\sinh^{-1} x = \log_\varepsilon[x+\sqrt{(x^2+1)}] \qquad . \qquad . \qquad 1(\text{xxx})$$

the positive sign being chosen to make the quantity in the square brackets positive.

In a similar way we may show that

$$\left.\begin{aligned}\cosh^{-1} x &= \log_e [x \pm \sqrt{(x^2-1)}]\\ \tanh^{-1} x &= \log_e [(1+x)/(1-x)]\\ \coth^{-1} x &= \log_e [(x+1)/(x-1)]\end{aligned}\right\} \quad . \quad . \quad 1(\text{xxx})$$

We have seen from 1(xxix) that the hyperbolic function of a quantity of the form $A+jB$ may be expressed in the form $X+jY$. Hence the inverse problem may also be solved. Before we do this we shall have to consider more fully the use and meaning of the quantity "$j$".

**1.7. Complex Numbers.** If $x$ and $y$ are real numbers, each lying between $-\infty$ and $+\infty$, the quantity $x+jy$, where $j=\sqrt{-1}$ is known as a "*complex number*". A complex number follows the normal laws of algebraic quantities with the added fact that integral powers of $j$ give rise to no new quantity, for

$$j^2=-1, j^3=j^2\times j=-j, j^4=j^3\times j=-j\times j=+1, j^5=j^4\times j=j, \text{etc.}$$

If we have two complex numbers, $A+jB$ and $C+jD$, then

$$\left.\begin{aligned}(A+jB)+(C+jD) &= \{(A+C)+j(B+D)\}\\ (A+jB)\times(C+jD) &= AC+j(BC+AD)+j^2BD\\ &= \{(AC-BD)+j(BC+AD)\}\end{aligned}\right\} \quad 1(\text{xxxi})$$

The two complex numbers $x+jy$, $x-jy$ are said to be "*conjugate*", and the product of two conjugate numbers is wholly real, for

$$\left.\begin{aligned}(x+jy)(x-jy) &= x^2+j(xy-yx)-j^2y^2\\ &= x^2+y^2\end{aligned}\right\} \quad . \quad 1(\text{xxxii})$$

We may now divide one complex number by another, for

$$\begin{aligned}\frac{A+jB}{C+jD} &= \frac{(A+jB)(C-jD)}{(C+jD)(C-jD)}\\ &= \frac{(AC+BD)+j(BC-AD)}{C^2+D^2} \quad . \quad . \quad 1(\text{xxxiii})\end{aligned}$$

This method is known as "*rationalization of the denominator*".

In the complex number $A+jB$, $A$ is known as the real part, and $jB$ the imaginary part. If two complex numbers are equal, then their real parts are equal, and their imaginary parts are also equal, for if

$$A+jB = C+jD$$

then

$$A-C = j(D-B)$$

and squaring both sides,

$$(A-C)^2 = -(D-B)^2$$

i.e.

$$(A-C)^2+(D-B)^2 = 0$$

and as the square of a real quantity is always positive, both

$$A - C = 0, \text{ and } D - B = 0.$$

We have seen that

$$\varepsilon^{j\theta} = \cos\theta + j\sin\theta \quad . \quad . \quad . \quad 1(\text{xxi})$$

from which $$r\varepsilon^{j\theta} = r\cos\theta + jr\sin\theta$$

and this is of the form $x+jy$. If

$$x+jy = r\varepsilon^{j\theta}$$
$$x+jy = r\cos\theta + jr\sin\theta$$

whence
$$x = r\cos\theta$$
$$y = r\sin\theta.$$

Squaring the last two and adding,

$$x^2+y^2 = r^2\cos^2\theta + r^2\sin^2\theta$$
$$= r^2$$

and dividing,
$$\frac{y}{x} = \frac{\sin\theta}{\cos\theta}$$
$$= \tan\theta$$

Thus it is possible to write

$$\left.\begin{aligned} x+jy &= \sqrt{(x^2+y^2)}.\exp\left(j\tan^{-1}\frac{y}{x}\right) \\ \text{or} \quad r\varepsilon^{j\theta} &= r\cos\theta + jr\sin\theta \end{aligned}\right\} \quad . \quad . \quad 1(\text{xxxiv})$$

$x+jy$ is known as the "*cartesian form*" of the complex number, and $r\varepsilon^{j\theta}$ as the "*polar form*".

The cartesian form is of use when complex numbers are to be added or subtracted, whilst the polar form is of use when complex numbers are to be multiplied, divided, or powers or roots are to be determined.

In the polar form $r$ is known as the *modulus* and $\theta$ as the *argument* or *angle*.

If $Z = r\varepsilon^{j\theta}$, $|Z| = \text{mod. } Z = (\text{modulus of } Z) = r$,
and arg. $Z = (\text{argument of } Z) = \theta$,*

then, as

$$\left.\begin{aligned} r_1\varepsilon^{j\theta_1} \times r_2\varepsilon^{j\theta_2} &= r_1r_2\varepsilon^{j(\theta_1+\theta_2)} \\ \text{and} \quad r_1\varepsilon^{j\theta_1} \div r_2\varepsilon^{j\theta_2} &= \frac{r_1}{r_2}\varepsilon^{j(\theta_1-\theta_2)} \end{aligned}\right\} \quad . \quad . \quad 1(\text{xxxv})$$

we have the rules for multiplication and division of complex numbers, viz. :—

* When $\theta$ is expressed in degrees, it is usual to write $Z = r\underline{/\theta}$, the suffix for degrees being understood. It should be remembered, on taking logarithms, that the formulæ refer to $\theta$ expressed in radians, and this conversion must always be made in such circumstances.

*Multiplication.* Multiply moduli and add arguments.

*Division.* Divide moduli and subtract arguments.

Complex numbers may take up particular forms,

e.g.
$$\begin{aligned} a &= a+j0 \\ &= a \exp j2n\pi \end{aligned}$$

as $\cos 2n\pi = 1$, and $\sin 2n\pi = 0$, when $n$ is an integer,

and
$$\begin{aligned} -a &= -a+j0 \\ &= a \exp \{j(2n+1)\pi\} \end{aligned}$$

as $\cos \{(2n+1)\pi\} = -1$, and $\sin \{(2n+1)\pi\} = 0$, when $n$ is an integer.

We may now give a meaning to the expression $\log_\varepsilon(-x)$, where $x$ is a positive quantity, for

$$\begin{aligned} -x &= x.\exp \{j(2n+1)\pi\} \\ \therefore \log_\varepsilon(-x) &= \log_\varepsilon [x.\exp \{j(2n+1)\pi\}] \\ &= \log_\varepsilon x+\log_\varepsilon [\exp \{j(2n+1)\pi\}] \\ &= \log_\varepsilon x+j(2n+1)\pi \quad . \quad . \quad . \quad 1(\text{xxxvi}) \end{aligned}$$

and, as $n$ is to be an integer, it is usual to put $n = 0$, when

$$\log_\varepsilon(-x) = \log_\varepsilon x+j\pi.$$

Again

$$\begin{aligned} \log_\varepsilon(x+jy) &= \log_\varepsilon \left\{ \sqrt{(x^2+y^2)}.\exp\left(j \tan^{-1}\frac{y}{x}\right)\right\} \\ &= \log_\varepsilon \sqrt{(x^2+y^2)}+j \tan^{-1}\frac{y}{x} \quad . \quad . \quad 1(\text{xxxvii}) \end{aligned}$$

## 1.8. Examples on Manipulation of Complex Numbers.

$$\begin{aligned} 3+j4 &= \sqrt{(3^2+4^2)} \exp\left(j \tan^{-1}\frac{4}{3}\right) \\ &= 5 \exp(j0{\cdot}9269) \end{aligned}$$

as $\tan^{-1}\frac{4}{3} = 53°6' = 0{\cdot}9269$ radians.

---

$$\begin{aligned} 5+j12 &= \sqrt{(5^2+12^2)}.\exp\left(j \tan^{-1}\frac{12}{5}\right) \\ &= 13 \exp(j1{\cdot}1761) \end{aligned}$$

---

$$\begin{aligned} (3+j4)(5+j12) &= 15-48+j(20+36) \\ &= -33+j56 \\ &= \sqrt{(33^2+56^2)} \exp\left(j \tan^{-1}\frac{56}{-33}\right) \\ &= 65 \exp(j\pi - 1{\cdot}0385) \\ &= 65 \exp(j2{\cdot}1031) \end{aligned}$$

the angle being chosen to make its cosine negative, and its sine positive.

---

Or, $$\begin{aligned}(3+j4)(5+j12) &= 5\exp(j0{\cdot}9269).13\exp(j1{\cdot}1761)\\ &= 65\exp(j\,\overline{0{\cdot}9269+1{\cdot}1761})\\ &= 65\exp(j2{\cdot}1030)\end{aligned}$$

which agrees with the result obtained by the first method used.

---

$$\begin{aligned}\sqrt{(3+j4)} &= \sqrt{\{5\exp(j0{\cdot}9269)\}}\\ &= \sqrt{5}.\exp(j0{\cdot}4635)\\ &= \sqrt{5}\{\cos 0{\cdot}4635+j\sin 0{\cdot}4635\}\\ &= \sqrt{5}\{0{\cdot}8949+j0{\cdot}4462\}\\ &= 2{\cdot}001+j0{\cdot}9977\end{aligned}$$

---

$$\begin{aligned}\cosh\{5\exp(j0{\cdot}9269)\} &= \cosh(3+j4)\\ &= \cosh 3.\cos 4+j\sinh 3.\sin 4.\end{aligned}$$

Now 4 radians are equal to $\pi+0{\cdot}8584$ radians or $180°+49°\ 11'$

$$\begin{aligned}\therefore \cosh\{5\exp(j0{\cdot}9269)\} &= 10{\cdot}068.\overline{-0{\cdot}6536}+j10{\cdot}018.0{\cdot}7568\\ &= -6{\cdot}680+j7{\cdot}583\end{aligned}$$

---

$$\begin{aligned}\sinh^{-1}(5+j12) &= \sinh^{-1}\{13\exp(j1{\cdot}1761)\}\\ &= \sinh^{-1}x\\ &= \log_e\{x+\sqrt{(x^2+1)}\} \qquad . \qquad . \qquad 1(\text{xxx})\end{aligned}$$

where $$\begin{aligned}x &= 13\exp(j1{\cdot}1761)\\ &= 5+j12.\end{aligned}$$

Then $$\begin{aligned}x^2 &= 13^2.\exp(j2{\cdot}3522)\\ &= 169(\cos 2{\cdot}3522+j\sin 2{\cdot}3522)\\ &= 169(-0{\cdot}7042+j0{\cdot}7100)\\ &= -119+j120\\ x^2+1 &= -118+j120\\ &= \sqrt{(118^2+120^2)}.\exp\left(j\tan^{-1}\frac{120}{-118}\right)\\ &= 168{\cdot}3\exp(j.\overline{\pi-0{\cdot}7938})\\ &= 168{\cdot}3\exp(j2{\cdot}3478)\end{aligned}$$

the angle being chosen to make its cosine negative and its sine positive.

Then
$$\begin{aligned}\sqrt{(x^2+1)} &= \sqrt{\{168{\cdot}3 \exp(j2{\cdot}3478)\}}\\ &= \sqrt{168{\cdot}3}\exp(j1{\cdot}1739)\\ &= 12{\cdot}97\{\cos 1{\cdot}1739+j\sin 1{\cdot}1739\}\\ &= 12{\cdot}97(0{\cdot}3865+j0{\cdot}9223)\\ &= 5{\cdot}012+j11{\cdot}962\end{aligned}$$

and
$$\begin{aligned}x+\sqrt{(x^2+1)} &= 5+j12+5{\cdot}012+j11{\cdot}962\\ &= 10{\cdot}012+j23{\cdot}962\\ &= \sqrt{(10{\cdot}012^2+23{\cdot}962^2)}\exp\left(j\tan^{-1}\frac{23{\cdot}962}{10{\cdot}012}\right)\\ &= 2{\cdot}597\exp(j1{\cdot}1749)\end{aligned}$$

and
$$\begin{aligned}\sinh^{-1}(5+j12) &= \log_e\{x+\sqrt{(x^2+1)}\}\\ &= \log_e\{2{\cdot}597\exp(j1{\cdot}1749)\}\\ &= \log_e 2{\cdot}597+\log_e\{\exp(j1{\cdot}1749)\}\\ &= 0{\cdot}9544+j(2n\pi+1{\cdot}1749)\end{aligned}$$

where $n$ is an integer. We must have some other knowledge to determine $n$, for example, an approximate value for the imaginary part of $\sinh^{-1}(5+j12)$ obtained from experiment or adjacent calculations.

It will be seen that the work is simple in its steps, although it may be drawn out in any particular example.

**1.9. The Use of Complex Numbers in Electrical Calculations.** In some circumstances when a mathematical operation has to be performed on a cosine function of, say, $x$, it is possible to perform the same operation on $\exp jx$ and then extract the real part (R.P.). If a sine is concerned, it must be put into a cosine form by subtracting $\frac{\pi}{2}$ from $x$.

For example,

$$\begin{aligned}\cos\theta &= \text{R.P.}\exp(j\theta)\\ \frac{d}{d\theta}\cos\theta &= \text{R.P.}\frac{d}{d\theta}(\exp(j\theta))\\ &= \text{R.P.}\, j\exp(j\theta)\\ &= \text{R.P.}\, j(\cos\theta+j\sin\theta)\\ &= \text{R.P.}\,(j\cos\theta-\sin\theta)\\ &= -\sin\theta\end{aligned}$$

a result which is well known.

We appear to have increased the complexity of the operation in this case, but as will be shown, we have derived some advantages from the use of this method.

For example, if a current $I$ is passing through an inductance $L$, the p.d. developed across the inductance is given by

$$V = L\frac{dI}{dt}$$

If $I$ is a sinusoidal current, it may be written as

$$I = \hat{I}\cos\omega t$$

where $\omega$ is its angular velocity in radians per second, and $t$ is the time in seconds. Then

$$\begin{aligned} V &= L\frac{d}{dt}(\hat{I}\cos\omega t) \\ &= \hat{I}L(-\omega\sin\omega t) \\ &= \hat{I}\omega L\cos\left(\omega t+\frac{\pi}{2}\right). \end{aligned}$$

This means that the p.d. produced is directly proportional to $I$, $\omega$ and $L$, and is $\frac{\pi}{2}$ radians in advance of $I$.

Let us now write

$$I = \text{R.P. } \hat{I}\exp(j\omega t).$$

Then
$$\begin{aligned} V &= \text{R.P. } L\frac{d}{dt}\{\hat{I}\exp(j\omega t)\} \\ &= \text{R.P. } j\omega L\hat{I}\exp(j\omega t). \end{aligned}$$

Now we may interpret $j$ as

$$\begin{aligned} j &= 0+j \\ &= \exp\left(j\frac{\pi}{2}\right) \end{aligned}$$

and
$$\begin{aligned} V &= \text{R.P. } \omega L\hat{I}\exp\left\{j\left(\omega t+\frac{\pi}{2}\right)\right\} \\ &= \hat{I}\omega L\cos\left(\omega t+\frac{\pi}{2}\right) \end{aligned}$$

as before. We may, however, go back to

$$V = \text{R.P. } j\omega L\hat{I}\exp(j\omega t)$$

and write it as

$$V = \text{R.P. } j\omega LI$$

since
$$I = \text{R.P. } \hat{I}\exp(j\omega t).$$

It is the custom to leave out the symbol R.P. and write

$$V = j\omega LI$$

whence
$$\frac{V}{I} = j\omega L$$

and as $\frac{V}{I}$ is of the form of resistance, we call it the *impedance* of the inductance at an angular velocity $\omega$, and write

$$Z_L = j\omega L.$$

This convention enables us to apply all the circuit laws which have been developed for steady and uniform currents and resistances, to the case where the current is varying sinusoidally, and the circuit contains inductances. It is, however, only a convention, and if we want to know the actual p.d., we must introduce the symbol R.P. to obtain the actual value of the p.d.

In a similar way, if a current $I$ is flowing into a capacitor of capacitance $C$, the charge on the plates of the capacitor is given by

$$q = \int I\,dt$$

and

$$q = CV$$

where $V$ is the p.d. between the plates. Therefore

$$V = \frac{q}{C}$$

$$= \frac{1}{C}\int I\,dt$$

and if $I$ is written as

$$I = \hat{I}.\cos\omega t$$

$$= \text{R.P. } \hat{I}.\exp(j\omega t),$$

$$V = \text{R.P. } \frac{1}{C}\int \hat{I}\exp(j\omega t)\,dt$$

$$= \text{R.P. } \frac{1}{j\omega C}.\hat{I}\exp(j\omega t)$$

$$= \text{R.P. } \frac{1}{j\omega C}.I$$

and using the same convention, we may write

$$V = \frac{1}{j\omega C}.I$$

$$\frac{V}{I} = \frac{1}{j\omega C} = \frac{-j}{\omega C} = Z_C.$$

We interpret

$$V = \frac{1}{j\omega C}.I = \frac{-j}{\omega C}.I$$

as meaning that the p.d. across a capacitor is inversely proportional to $\omega$ and $C$, and directly proportional to $\hat{I}$ and is $\frac{\pi}{2}$ radians after the current.

Let us consider the case where a current $I$ ($= \hat{I} \cos \omega t$) is flowing in a circuit consisting of an inductance $L$, a resistance $R$ and a capacitance $C$, all connected in series. We want to know the p.d. developed across the network. Without the use of complex numbers we work as follows.

The p.d. across the network is equal to the sum of the p.d.s across its components. These are

(*a*) $L\frac{dI}{dt}$ across the inductance,

(*b*) $RI$ across the resistance,

(*c*) $\frac{1}{C}\int I\,dt$ across the capacitance.

$$\text{and} \qquad V = L\frac{dI}{dt} + RI + \frac{1}{C}\int I\,dt.$$

But $\quad I = \hat{I} \cos \omega t$

$$\therefore\ V = L\frac{d}{dt}(\hat{I} \cos \omega t) + R\hat{I}\cos \omega t + \frac{1}{C}\int \hat{I} \cos \omega t\,dt$$

$$= \omega L\hat{I} \cos\left(\omega t + \frac{\pi}{2}\right) + R\hat{I} \cos \omega t + \frac{1}{\omega C}\hat{I} \cos\left(\omega t - \frac{\pi}{2}\right)$$

$$= R\hat{I} \cos \omega t + \left(\omega L - \frac{1}{\omega C}\right).\hat{I}.\cos\left(\omega t + \frac{\pi}{2}\right)$$

since

$$\cos\left(\omega t - \frac{\pi}{2}\right) = -\cos\left(\omega t + \frac{\pi}{2}\right),$$

or

$$V = R\hat{I} \cos \omega t - \left(\omega L - \frac{1}{\omega C}\right).\hat{I}.\sin \omega t$$

since

$$\cos\left(\omega t + \frac{\pi}{2}\right) = -\sin \omega t.$$

Now

$$A \cos \theta + B \sin \theta = \sqrt{(A^2+B^2)}\left[\frac{A}{\sqrt{(A^2+B^2)}} \cos \theta + \frac{B}{\sqrt{(A^2+B^2)}} \sin \theta\right]$$

$$= \sqrt{(A^2+B^2)}[\cos \phi \cos \theta + \sin \phi \sin \theta]$$

where $\quad \cos \phi = \dfrac{A}{\sqrt{(A^2+B^2)}}$

$$\sin\phi = \frac{B}{\sqrt{(A^2+B^2)}}$$

$$\tan\phi = \frac{B}{A}$$

and

$$A\cos\theta + B\sin\theta = \sqrt{(A^2+B^2)}\cos(\theta-\phi)$$

hence

$$V = \sqrt{\left[R^2+\left(\omega L-\frac{1}{\omega C}\right)^2\right]}.\hat{I}\cos\left[\omega t+\tan^{-1}\frac{\left(\omega L-\frac{1}{\omega C}\right)}{R}\right] \quad 1(\text{xxxviii})$$

If we use the method of complex numbers, we work as follows.

(*a*) Impedance of inductance $= j\omega L$

(*b*) Impedance of resistance $= R$

(*c*) Impedance of capacitance $= \frac{1}{j\omega C}$.

Total impedance $= j\omega L + R + \frac{1}{j\omega C}$

$$= R + j\left(\omega L - \frac{1}{\omega C}\right)$$

and p.d. is given by (impedance) multiplied by (current), i.e.

$$V = \left[R+j\left(\omega L-\frac{1}{\omega C}\right)\right]I \quad . \quad . \quad . \quad . \quad . \quad 1(\text{xxxix})$$

$$= \sqrt{\left[R^2+\left(\omega L-\frac{1}{\omega C}\right)^2\right]}\exp\left(j\tan^{-1}\frac{\left(\omega L-\frac{1}{\omega C}\right)}{R}\right).I$$

which, on putting

$$I = \hat{I}.\exp(j\omega t)$$

and reintroducing the symbol R.P. (which, it should be remembered, has been omitted throughout) and carrying out the operation denoted by R.P., the result already given by 1(xxxviii) is obtained. The form 1(xxxix) is more simple than 1(xxxviii) and represents the same quantity.

It is obvious from this example that the work involved using the complex number method is much less, and involves more simple operations, than does the classical method. The complex number method is used throughout this book, and the symbol R.P. is omitted.

## 2. ELECTRICAL INTRODUCTION.

In addition to the Mathematical Introduction, the elementary theory of electric currents is also necessary for the understanding of the subject of electric wave filters. No proofs are given, as these may be found in electrical text-books.

**2.1. Current, Potential Difference and Resistance.** If $I$ is the current in amps. (amperes) in a circuit of resistance $R$ ohms, the potential difference between the ends of the circuit is given by

$$V = I.R \qquad . \quad . \quad . \quad . \quad 2(\text{i})$$

where $V$ is in volts. The current is here assumed to be steady. This relationship is known as Ohm's Law.

If a closed or continuous loop circuit of resistance $R$ ohms has a current $I$ amps. flowing in it, there must be a source of electromotive-force (e.m.f.) of $I.R$ volts in the loop. Such a source of e.m.f. may be provided by a cell, accumulator, generator, etc.

If the current varies with time, we may write it as $I(t)$, in which case the p.d. will also vary with time, and a modified form of Ohm's Law holds. This is

$$V(t) = I(t).Z \qquad . \quad . \quad . \quad . \quad 2(\text{ii})$$

$Z$ is known as the *impedance* of the circuit and is also measured in ohms. We usually shorten 2(ii) by writing $I(t)$ as $I$, and $V(t)$ as $V$, when 2(ii) becomes

$$V = I.Z \qquad . \quad . \quad . \quad . \quad . \quad 2(\text{ii}a)$$

In both 2(i) and 2(ii) $R$ and $Z$ are assumed to be independent of $I$ or $V$. Such circuits are known as linear circuits. If, however, $R$ or $Z$ depend on $I$, we may write them as $R(I)$ or $Z(I)$ and the relationships become

$$E = I.R(I) \qquad . \quad . \quad . \quad . \quad 2(\text{iii})$$

and

$$E = I.Z(I) \qquad . \quad . \quad . \quad . \quad 2(\text{iv})$$

Circuits for which these relationships hold are known as non-linear circuits. Unless otherwise stated, all the results developed in this book refer to linear circuits.

In the case of a linear circuit, an important theorem, the *Superposition Theorem*, enables us to simplify our work on any particular problem. This theorem states that, if in a linear circuit an e.m.f. $E_1$ gives rise to a current $I_1$ in one part of the circuit, and an e.m.f.

$E_2$ gives rise to a current $I_2$ in the same part of the circuit, then the two e.m.f.s applied together give rise to a current $I_1+I_2$ in the same part of the circuit.

**2.2. Kirchhoff's Laws.** Two laws, due to Kirchhoff, enable us to calculate the current in any part of a given network, for any applied e.m.f. These two laws are—

(*a*) At any point in a circuit, the algebraic sum of the current flowing to the point is zero;

(*b*) Passing round a closed loop, or mesh, in the circuit, the algebraic sum of the p.d.s across each element of the circuit is equal to the algebraic sum of the e.m.f.s in that mesh.

These two laws are illustrated in Figs. 2(*a*) and 2(*b*).

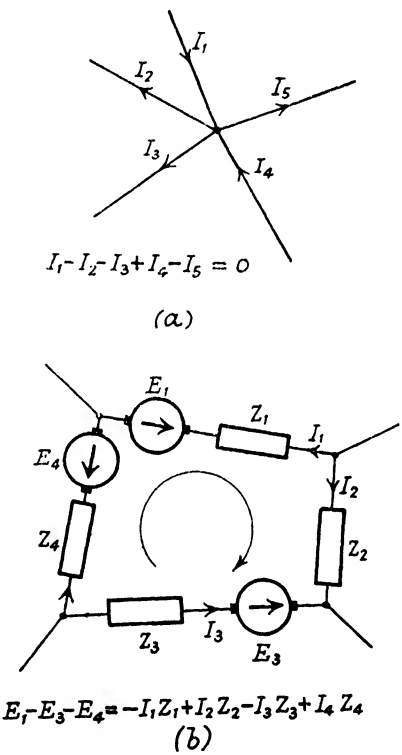


FIG. 2.—Kirchhoff's Laws.

An example of the use of these two laws is shown in Fig. 3, which represents a Wheatstone bridge network.

As a result of the e.m.f. $E_1$ let a current $I_1$ flow towards $A$. Let the current in the arm $AB$ be $I_2$. Then the current in the arm $AD$ must, by the first law, be $I_1 - I_2$. Let the current in the arm $BD$ be $I_3$. Then, at $B$, application of the first law shows that the current in the arm $BC$ must be $I_2 - I_3$. At the point $D$, it will be seen that the current in the arm $DC$ must be $(I_1 - I_2)+I_3$, and at the point $C$, the current flowing back to the source of e.m.f. is $(I_1 - I_2+I_3)+(I_2 - I_3) = I_1$.

We now have three unknowns, $I_1$, $I_2$ and $I_3$. We shall be able to find three simultaneous equations with which to determine these quantities, by the application of the second law.

In the mesh $A,B,C$ we have a source of e.m.f. $E_1$. Across $Z_1$ we have a p.d. of $I_1Z_1$, across $AB$ a p.d. of $I_2Z_5$, and across $BC$ a p.d. of $(I_2 - I_3)Z_4$. By the second law

$$I_1Z_1+I_2Z_5+(I_2 - I_3)Z_4 = E_1 \qquad . \qquad . \qquad 2(\text{v}a)$$

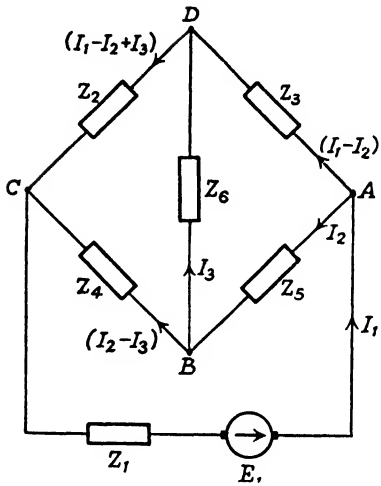


FIG. 3.—Wheatstone Bridge Network.

Similarly, in the mesh $ADB$, there is no e.m.f. and

$$(I_1 - I_2)Z_3 - I_3Z_6 - I_2Z_5 = 0 \quad . \quad . \quad 2(\text{vi}a)$$

and in the mesh $BDC$ there is again no e.m.f. and

$$I_3Z_6+(I_1 - I_2+I_3)Z_2 - (I_2 - I_3)Z_4 = 0 \; . \quad . \quad 2(\text{vii}a)$$

These three equations may be written

$$I_1Z_1+I_2(Z_4+Z_5) - I_3Z_4 - E_1 = 0 \; . \quad . \quad 2(\text{v})$$

$$I_1Z_3 - I_2(Z_3+Z_5) - I_3Z_6 = 0 \; . \quad . \quad 2(\text{vi})$$

$$I_1Z_2 - I_2(Z_2+Z_4)+I_3(Z_2+Z_4+Z_6) = 0 \; . \quad . \quad 2(\text{vii})$$

We may solve these by means of determinants, as shown in 1.3, and

$$I_1\Delta = -\begin{vmatrix} (Z_4+Z_5) & -Z_4 & -E_1 \\ (Z_3+Z_5) & -Z_6 & 0 \\ (Z_2+Z_4) & (Z_2+Z_4+Z_6) & 0 \end{vmatrix}$$

$$I_2\Delta = \begin{vmatrix} Z_1 & -Z_4 & -E_1 \\ Z_3 & -Z_6 & 0 \\ Z_2 & (Z_2+Z_4+Z_6) & 0 \end{vmatrix}$$

$$I_3\Delta = -\begin{vmatrix} Z_1 & (Z_4+Z_5) & -E_1 \\ Z_3 & -(Z_3+Z_5) & 0 \\ Z_2 & -(Z_2+Z_4) & 0 \end{vmatrix}$$

where

$$\Delta = \begin{vmatrix} Z_1 & (Z_4+Z_5) & -Z_4 \\ Z_3 & -(Z_3+Z_5) & -Z_6 \\ Z_2 & -(Z_2+Z_4) & (Z_2+Z_4+Z_6) \end{vmatrix}$$

Let us work out $I_3$.

$$-\begin{vmatrix} Z_1 & (Z_4+Z_5) & -E_1 \\ Z_3 & -(Z_3+Z_5) & 0 \\ Z_2 & -(Z_2+Z_4) & 0 \end{vmatrix} = -Z_1\begin{vmatrix} -(Z_3+Z_5) & 0 \\ -(Z_2+Z_4) & 0 \end{vmatrix} - [-(Z_4+Z_5)]\begin{vmatrix} Z_3 & 0 \\ Z_2 & 0 \end{vmatrix}$$

$$-(-E_1)\begin{vmatrix} Z_3 & -(Z_3+Z_5) \\ Z_2 & -(Z_2+Z_4) \end{vmatrix}$$

$$= E_1\begin{vmatrix} Z_3 & -(Z_3+Z_5)+Z_3 \\ Z_2 & -(Z_2+Z_4)+Z_2 \end{vmatrix}$$ (adding first column to second column)

$$= E_1\begin{vmatrix} Z_3 & -Z_5 \\ Z_2 & -Z_4 \end{vmatrix}$$

$$= -E_1(Z_3Z_4 - Z_2Z_5)$$

and
$$I_3 = \frac{-E_1(Z_3Z_4 - Z_2Z_5)}{\Delta}.$$

Now $I_3$ is zero if

$$Z_3Z_4 = Z_2Z_5$$

and in this condition the bridge is said to be balanced, and the circuits $AC$ and $BD$ are said to be conjugate.

**2.3. Maxwell's Cyclic Currents.** As the number of meshes in a circuit increases, the work involved in complying with Kirchhoff's first law becomes more and more involved, and it may happen that too few (or too many) variables $I_n$ are chosen and too many (or too few) simultaneous equations are obtained. In order to simplify the setting up of these equations, Kirchhoff's first law may be replaced by Maxwell's method of cyclic currents. In each mesh a cyclic current is imagined to flow. This immediately gives the same number of unknowns as simultaneous equations. The second law of Kirchhoff applied to each mesh gives an equation as before. Fig. 4 shows the Wheatstone bridge network of Fig. 3 as solved by Maxwell's cyclic currents. Cyclic currents of $I_1$, $I_2$ and $I_3$ flow in the meshes $ABC$- generator, $ADB$ and $DCB$ respectively.

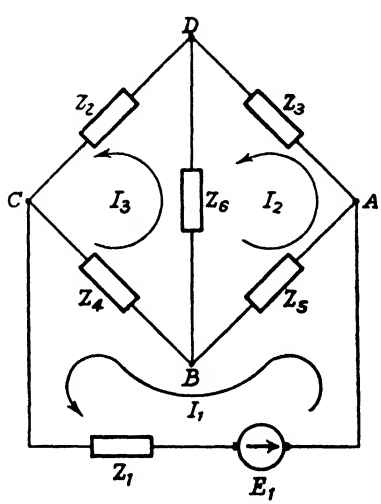


FIG. 4.—Wheatstone Bridge Network. Maxwell's Cyclic Currents.

In the first mesh, the e.m.f. is $E_1$, the p.d. across $Z_1$ is $I_1Z_1$, the p.d. across $Z_5$ is $(I_1 - I_2)Z_5$ and the p.d. across $Z_4$ is $(I_1 - I_3)Z_4$, and

$$I_1Z_1+(I_1 - I_2)Z_5+(I_1 - I_3)Z_4 = E_1$$

or
$$I_1(Z_1+Z_4+Z_5) - I_2Z_5 - I_3Z_4 - E_1 = 0.$$

Similarly, in the second mesh,

$$(I_2 - I_1)Z_5 + I_2Z_3+(I_2 - I_3)Z_6 = 0$$

or
$$- I_1Z_5+I_2(Z_3+Z_5+Z_6) - I_3Z_6 = 0$$

and in the third mesh,

$$I_3Z_2+(I_3 - I_1)Z_4+(I_3 - I_2)Z_6 = 0$$

or
$$- I_1Z_4 - I_2Z_6+I_3(Z_2+Z_4+Z_6) = 0.$$

Solving by means of determinants we have

$$I_1\Delta' = - \begin{vmatrix} -Z_5 & -Z_4 & -E_1 \\ (Z_3+Z_5+Z_6) & -Z_6 & 0 \\ -Z_6 & (Z_2+Z_4+Z_6) & 0 \end{vmatrix}$$

$$I_2\Delta' = \begin{vmatrix} (Z_1+Z_4+Z_5) & -Z_4 & -E_1 \\ -Z_5 & -Z_6 & 0 \\ -Z_4 & (Z_2+Z_4+Z_6) & 0 \end{vmatrix}$$

$$I_3\Delta' = - \begin{vmatrix} (Z_1+Z_4+Z_5) & -Z_5 & -E_1 \\ -Z_5 & (Z_3+Z_5+Z_6) & 0 \\ -Z_4 & -Z_6 & 0 \end{vmatrix}$$

and

$$I_2\Delta' = -E_1 \begin{vmatrix} -Z_5 & -Z_6 \\ -Z_4 & (Z_2+Z_4+Z_6) \end{vmatrix}$$
$$= E_1\,[Z_5(Z_2+Z_4+Z_6)+Z_4Z_6]$$
$$I_3\Delta' = E_1 \begin{vmatrix} -Z_5 & (Z_3+Z_5+Z_6) \\ -Z_4 & -Z_6 \end{vmatrix}$$
$$= E_1\,[Z_5Z_6+Z_4(Z_3+Z_5+Z_6)].$$

The current in the arm $BD$ is $(I_3 - I_2)$, and

$$(I_3 - I_2)\Delta' = E_1[Z_5Z_6+Z_4(Z_3+Z_5+Z_6) - Z_4Z_6 - Z_5(Z_2+Z_4+Z_6)]$$
$$= E_1(Z_3Z_4 - Z_5Z_2).$$

In this case

$$\Delta' = \begin{vmatrix} (Z_1+Z_4+Z_5) & -Z_5 & -Z_4 \\ -Z_5 & (Z_3+Z_5+Z_6) & -Z_6 \\ -Z_4 & -Z_6 & (Z_2+Z_4+Z_6) \end{vmatrix}$$

If we add the second and third columns to the first,

$$\Delta' = \begin{vmatrix} Z_1 & -Z_5 & -Z_4 \\ Z_3 & (Z_3+Z_5+Z_6) & -Z_6 \\ Z_2 & -Z_6 & (Z_2+Z_4+Z_6) \end{vmatrix}$$

and adding the third column to the second

$$\Delta' = \begin{vmatrix} Z_1 & -(Z_2+Z_4) & -Z_4 \\ Z_3 & (Z_3+Z_5) & -Z_6 \\ Z_2 & (Z_2+Z_4) & (Z_2+Z_4+Z_6) \end{vmatrix}$$

and is seen to be equal to $-\Delta$, and the current in $BD$ is thus

$$\frac{E_1}{\Delta'}(Z_3Z_4 - Z_5Z_2) = \frac{-E_1}{\Delta}(Z_3Z_4 - Z_5Z_2).$$

If, in the $i$th mesh of a network, we set up the equation following from Kirchhoff's second law, the equation will have the following form

$$I_1Z_{i1}+I_2Z_{i2}+ \ . \ . \ . \ +I_iZ_{ii}+ \ . \ . \ . \ +I_nZ_{in} = E_n$$

where $Z_{ik}$ is the impedance which is common to meshes $i$ and $k$, and through which $I_k$, the mesh current in mesh $k$, has effect on the mesh $i$, and $Z_{ii}$ is the total impedance of the elements of the network which form the immediate boundary of the mesh $i$. It will be seen that $Z_{ik} = Z_{ki}$. The mesh equations will thus take the form

$$\left.\begin{array}{l} I_1Z_{11}+I_2Z_{12}+ \ . \ . \ . \ +I_iZ_{1i}+ \ . \ . \ . \ +I_nZ_{1n} = E_1 \\ I_1Z_{21}+I_2Z_{22}+ \ . \ . \ . \ +I_iZ_{2i}+ \ . \ . \ . \ +I_nZ_{2n} = E_2 \\ \vdots \qquad \vdots \qquad \vdots \qquad \vdots \qquad \vdots \\ I_1Z_{n1}+I_2Z_{n2}+ \ . \ . \ . \ +I_iZ_{ni}+ \ . \ . \ . \ +I_nZ_{nn} = E_n \end{array}\right\} \quad . \quad 2(\text{viii})$$

and in the symbols of matrix algebra this may be written as

$$\begin{bmatrix} Z_{11} & Z_{12} & \ldots & Z_{1i} & \ldots & Z_{1n} \\ Z_{21} & Z_{22} & \ldots & Z_{2i} & \ldots & Z_{2n} \\ \vdots & \vdots & & \vdots & & \vdots \\ Z_{n1} & Z_{n2} & \ldots & Z_{ni} & \ldots & Z_{nn} \end{bmatrix} \begin{bmatrix} I_1 \\ I_2 \\ \vdots \\ I_n \end{bmatrix} = \begin{bmatrix} E_1 \\ E_2 \\ \vdots \\ E_n \end{bmatrix} \quad . \quad 2(\text{ix})$$

which in a more symbolic form may be written

$$[Z][I] = [E] \quad . \quad . \quad . \quad . \quad 2(\text{x})$$

and we may write

$$[I] = [Z]^{-1}[E] \quad . \quad . \quad . \quad . \quad (2\text{xi})$$

with a suitable meaning applied to $[Z]^{-1}$. Although the final amount of calculation necessary to determine any particular mesh current is not reduced by the use of matrix algebra, we are able to handle the whole set of simultaneous equations of a network in a suitable shorthand way. A large amount of electric circuit theory has been developed, chiefly in Germany, by the use of matrix algebra. The book *Determinants and Matrices*, by A. C. Aitken

(Oliver & Boyd), may be referred to for methods of handling matrices.

**2.4. Thévenin's Theorem.** Let us return to 2(viii) and solve by determinants.

$$(\pm)I_i = \frac{\begin{vmatrix} Z_{11} & Z_{12} & \cdots & Z_{1(i-1)} & Z_{1(i+1)} & \cdots & Z_{1n} & -E_1 \\ \vdots & \vdots & & \vdots & \vdots & & \vdots & \vdots \\ Z_{n1} & Z_{n2} & \cdots & Z_{n(i-1)} & Z_{n(i+1)} & \cdots & Z_{nn} & -E_n \end{vmatrix}}{\begin{vmatrix} Z_{11} & Z_{12} & \cdots & Z_{1(i-1)} & Z_{1i} & \cdots & Z_{1(n-1)} & Z_{1n} \\ \vdots & \vdots & & \vdots & \vdots & & \vdots & \vdots \\ & & & & Z_{ii} & & & \\ \vdots & \vdots & & \vdots & \vdots & & \vdots & \vdots \\ Z_{n1} & Z_{n2} & \cdots & Z_{n(i-1)} & Z_{ni} & \cdots & Z_{n(n-1)} & Z_{nn} \end{vmatrix}} \equiv \frac{G}{H}, \text{ say.}$$

If we add an impedance into mesh $i$ without increasing $Z_{ik}$,

$$(\pm)I_i' = \frac{G}{\begin{vmatrix} Z_{11} & Z_{12} & \cdots & Z_{1(i-1)} & Z_{1i} & \cdots & Z_{1(n-1)} & Z_{1n} \\ \vdots & \vdots & & \vdots & \vdots & & \vdots & \vdots \\ & & & & (Z_{ii}+Z) & & & \\ \vdots & \vdots & & \vdots & \vdots & & \vdots & \vdots \\ Z_{n1} & Z_{n2} & \cdots & Z_{n(i-1)} & Z_{ni} & \cdots & Z_{n(n-1)} & Z_{nn} \end{vmatrix}} = \frac{G}{H+ZK}$$

where $K$ is a determinant obtained from the determinant $H$ by striking out the $i$th row and column.

Then
$$(\pm)I_i' = \frac{\dfrac{G}{K}}{Z+\dfrac{H}{K}}.$$

Now if we make $Z$ zero, and all internal sources of e.m.f. zero, and add a source of e.m.f. $E$ into mesh $i$,

$$(\pm)I_i = \frac{EK}{H}$$

as will be seen by writing $G$ out in full. Thus $\dfrac{H}{K}$ is the impedance of the network as seen by a source of e.m.f. in mesh $i$. Write this impedance $Z_{0i}$, and

$$(\pm)I_i' = \frac{\dfrac{G}{K}}{Z+Z_{0i}}.$$

If $I_i$ is made zero by introducing an e.m.f. of $E_{0i}$ into the $i$th mesh, $E_{0i}$ must be equal and opposite to the p.d. which would be developed

between the two severed ends of the mesh $i$, were it cut. If we add $-E_{0i}$ to $E_i$ in $G$, we shall find that $G$ becomes

$$G - E_{0i}K$$

whence
$$E_{0i} = \frac{G}{K}$$

and
$$(\pm)I_i' = \frac{E_{0i}}{Z+Z_{0i}}.$$

We may therefore say that a network with an external pair of

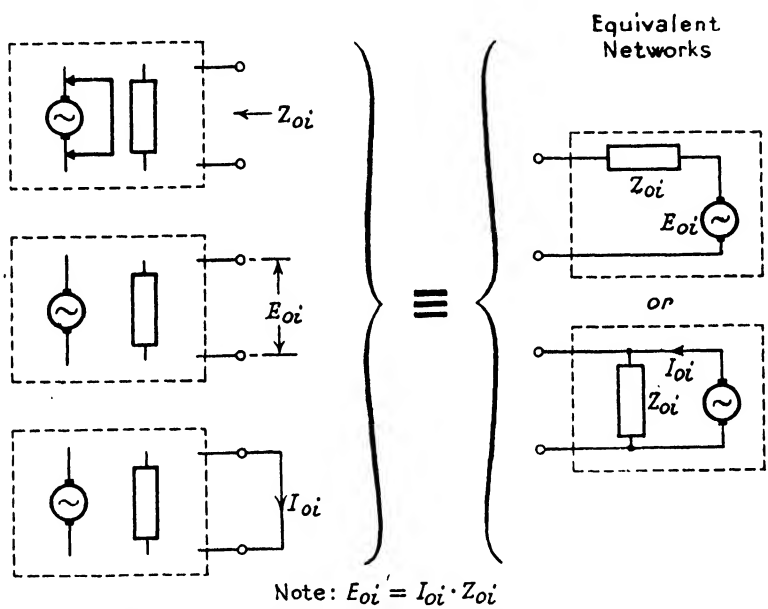


FIG. 5.—Equivalent Networks. Thévenin's Theorem.

terminals (in our example, in mesh $i$) may be replaced by a generator of internal impedance ($Z_{0i}$) equal to the impedance measured between those terminals with all the internal sources of e.m.f. short-circuited, and of e.m.f. ($E_{0i}$) equal to the p.d. between the pair of terminals when open-circuited. This theorem is generally attributed to Thévenin, but was stated earlier by Helmholtz.

A similar representation of a two-terminal network is a constant-current generator closed at the terminals by an impedance ($Z_{0i}$) equal to the impedance between the terminals with all of the internal sources of e.m.f. short-circuited, and of current ($I_{0i}$) equal to the current between the two terminals when they are short-circuited. The two representations are shown in Fig. 5.

## 3. INTRODUCTION TO THE LADDER NETWORK.

The ladder network theory which will be developed in the following sections is based on the work of Campbell, Zobel and others.

The basic network in ladder network theory is shown in Fig. 6(*a*), in which $Z_1$ and $Z_2$ are generalized impedances.* The network is unbalanced, but may be made balanced by splitting the series arm $Z_1$ equally between the longitudinal connections as shown in Fig. 6(*b*).

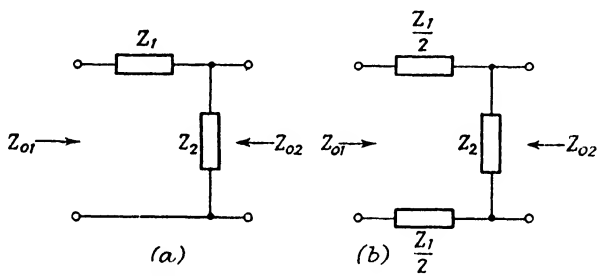


FIG. 6.—Unbalanced and Balanced Half-sections.

In all the work that follows the unbalanced form will be used, and any network can be changed into the balanced form by the method of Fig. 6(*b*).

The network of Fig. 6(*a*) will be known as the *basic* or *parent half-section.*

We shall associate three parameters with all networks, and in particular with this basic half-section. For the basic half-section these parameters are not independent as there are only two variables (i.e. $Z_1$ and $Z_2$) in the half-section. The three parameters are two *image impedances,* $Z_{01}$ and $Z_{02}$, and an *image transfer coefficient,* $\frac{P}{2}$. They are defined as follows :

*Image Impedance.* If the end 2 of a network is closed by its image impedance $Z_{02}$, the impedance shown by the end 1 is its

* The half-section is chosen as the basic structure as the formulæ obtained are more simple than are obtained if the whole section is used, the figures 2 and 4 which appear in the latter case being absent in the former.

image impedance $Z_{01}$. Similarly, if the end 1 is closed by $Z_{01}$, the end 2 shows an impedance of $Z_{02}$.

In the case of the basic half-section of Fig. 6(*a*), $Z_{01}$ is known as the *mid-series image impedance,* and $Z_{02}$ as the *mid-shunt image impedance.*

*Image Transfer Coefficient.* If the end 1 (or 2) is closed by its image impedance $Z_{01}$ (or $Z_{02}$) and a current $I_2$ (or $I_1$) caused to flow into the end 2 (or 1), giving rise to a p.d. of $V_2$ (or $V_1$) at the end 2 (or 1), a p.d. of $V_1$ (or $V_2$) at the end 1 (or 2) and a current $I_1$ (or $I_2$) into the closing impedance $Z_{01}$ (or $Z_{02}$), then the image transfer coefficient is given by

$$* \frac{P}{2} = \log_e \left[\frac{\sqrt{(V_2 I_2)}}{\sqrt{(V_1 I_1)}}\right] \left(\text{or } \log_e \left[\frac{\sqrt{(V_1 I_1)}}{\sqrt{(V_2 I_2)}}\right]\right) \quad . \quad . \quad 3(\text{i})$$

Let us now determine these parameters for the basic half-section of Fig. 6(*a*).

When the end 2 is closed by $Z_{02}$, the impedance shown by end 1 is $Z_{01}$, i.e.

$$Z_{01} = Z_1 + \frac{Z_2 Z_{02}}{Z_2 + Z_{02}} \quad . \quad . \quad . \quad .$$

Similarly, when end 1 is closed by $Z_{01}$, the impedance shown by end 2 is $Z_{02}$, i.e. 3(ii)

$$Z_{02} = \frac{Z_2(Z_1 + Z_{01})}{Z_1 + Z_2 + Z_{01}} \quad . \quad . \quad . \quad .$$

and on solving for $Z_{01}$ and $Z_{02}$ we get

$$\left.\begin{aligned} Z_{01} &= \sqrt{(Z_1^2 + Z_1 Z_2)} \\ Z_{02} &= \frac{Z_1 Z_2}{\sqrt{(Z_1^2 + Z_1 Z_2)}} \\ \text{whence} \qquad Z_{01} Z_{02} &= Z_1 Z_2 \end{aligned}\right\} \quad . \quad . \quad . \quad 3(\text{iii})$$

Now close end 1 by $Z_{01}$ and apply a p.d. of $V_2$ at the end 2. Then, since this end presents an impedance $Z_{02}$, the current $I_2$ is equal to $\frac{V_2}{Z_{02}}$. The p.d. $V_1$ across $Z_{01}$ is $V_2 \frac{Z_{01}}{Z_1 + Z_{01}}$ and the current $I_1$ in $Z_{01}$ is $\frac{V_1}{Z_{01}}$. Then

$$V_2 I_2 = \frac{V_2^2}{Z_{02}}$$

and

$$V_1 I_1 = V_2^2 \left[\frac{Z_{01}}{Z_1 + Z_{01}}\right]^2 \frac{1}{Z_{01}}$$

---

* $\frac{P}{2}$ as we are considering a half-section.

and from (i)

$$\frac{P}{2} = \log_e \left\{ \sqrt{\frac{Z_{01}}{Z_{02}}} \left[ \frac{Z_1 + Z_{01}}{Z_{01}} \right] \right\}$$

which on eliminating $Z_{01}$ and $Z_{02}$ by means of (iii) reduces to

$$\frac{P}{2} = \log_e \left\{ \sqrt{\frac{Z_1}{Z_2}} \left[ 1 + \sqrt{1 + \frac{Z_2}{Z_1}} \right] \right\}.$$

If we work from the other end of the network, we will find that $\frac{P}{2}$ has the same value.

An alternative form for $\frac{P}{2}$ is

$$\exp\left(\frac{P}{2}\right) = \sqrt{\frac{Z_1}{Z_2}} \left[ 1 + \sqrt{1 + \frac{Z_2}{Z_1}} \right]$$

and as

$$\sinh \frac{P}{2} = \frac{1}{2} \left[ \exp\left(\frac{P}{2}\right) - \exp\left(-\frac{P}{2}\right) \right]$$

this may be written as

$$\left.\begin{aligned} \sinh \frac{P}{2} &= \sqrt{\frac{Z_1}{Z_2}} \\ \text{or} \qquad \cosh P &= 1 + 2\frac{Z_1}{Z_2} \end{aligned}\right\} \quad . \quad . \quad . \quad . \quad 3(\text{iv})$$

since

$$\cosh \theta = 1 + 2 \sinh^2 \frac{\theta}{2} \quad . \quad . \quad . \quad 1(\text{xxvi})$$

It will be seen that $P$ is infinite if $Z_1$ is infinite, or $Z_2$ is zero and $Z_1$ is not zero.

If the end 2 is open-circuited, or short-circuited, the impedances shown by the end 1 are given by

$$Z_{f1} = Z_1 + Z_2$$

and

$$Z_{c1} = Z_1 \text{ respectively,}$$

and if the end 1 is open-circuited, or short-circuited, the impedances shown by the end 2 are given by

$$Z_{f2} = Z_2$$

$$Z_{c2} = \frac{Z_1 Z_2}{Z_1 + Z_2} \text{ respectively.}$$

It will be seen from (iii) that

$$\left.\begin{aligned} Z_{01} &= \sqrt{(Z_{f1} Z_{c1})} \\ Z_{02} &= \sqrt{(Z_{f2} Z_{c2})} \end{aligned}\right\} \quad . \quad . \quad . \quad . \quad 3(\text{v})$$

and as
$$\cosh\frac{P}{2} = \sqrt{\left(1+\sinh^2\frac{P}{2}\right)} \text{ from 1(xxv)}$$
$$= \sqrt{\left(1+\frac{Z_1}{Z_2}\right)} \text{ from (iv),}$$
$$\tanh\frac{P}{2} = \sqrt{\frac{Z_1}{Z_2}}\left[\sqrt{\left(1+\frac{Z_1}{Z_2}\right)}\right]^{-1}$$
$$= \sqrt{\left[\frac{Z_1}{Z_1+Z_2}\right]}$$
$$= \sqrt{\left[\frac{Z_{c1}}{Z_{f1}}\right]} = \sqrt{\left[\frac{Z_{c2}}{Z_{f2}}\right]} \quad . \quad . \quad 3(\text{vi})$$

Equations (v) and (vi) are sometimes used to define the three image parameters.

## 4. CONSTANT-*k* SECTIONS.

When the product of the impedances $Z_1$ and $Z_2$ is a constant for all frequencies, the half-section is known as a *constant-k half-section*, and if $Z_1Z_2 = R_0^2$, $R_0$ is known as the *design impedance* of the half-section. For such a half-section (iii) and (iv) reduce to

$$\left.\begin{aligned} Z_{01} &= R_0\sqrt{\left[1+\left(\frac{Z_1}{R_0}\right)^2\right]} = R_0\sqrt{\left[1+\left(\frac{R_0}{Z_2}\right)^2\right]} \\ Z_{02} &= \frac{R_0}{\sqrt{\left[1+\left(\frac{Z_1}{R_0}\right)^2\right]}} = \frac{R_0}{\sqrt{\left[1+\left(\frac{R_0}{Z_2}\right)^2\right]}} \\ \text{and}\quad Z_{01}Z_{02} &= R_0^2 \end{aligned}\right\} \quad . \quad 4(\text{i})$$

and
$$\sinh\frac{P}{2} = \frac{Z_1}{R_0} = \frac{R_0}{Z_2} \quad . \quad . \quad . \quad 4(\text{ii})$$

## 5. THE WAVE FILTER.

It has been shown that

$$\cosh P = 1+2\frac{Z_1}{Z_2}. \qquad . \qquad . \qquad . \qquad 3(\text{iv})$$

In general $Z_1$ and $Z_2$ are complex and in consequence $\cosh P$ will also be complex, and we will write

$$P = A+jB \qquad . \qquad . \qquad . \qquad . \qquad 5(\text{i})$$

where $A$ and $B$ are real. Now we know that

$$\frac{P}{2} = \log_\varepsilon \left[\frac{\sqrt{(V_2I_2)}}{\sqrt{(V_1I_1)}}\right] \qquad . \qquad . \qquad . \qquad 3(\text{i})$$

and if we simplify matters by making $Z_{01}$ equal to $Z_{02}$ (which is only possible for a more complex form of network), we shall see that the root-volt-amps. ratio is equal to either the voltage ratio or the current ratio, and 3(i) reduces to

$$\frac{P}{2} = \log_\varepsilon \frac{V_2}{V_1}$$

whence

$$V_1 = V_2 \exp\left(-\frac{P}{2}\right)$$

$$= V_2 \exp\left[-\frac{(A+jB)}{2}\right] \text{ from } 5(\text{i}).$$

Suppose $\quad V_2 = \hat{V}_2 \exp(j\omega t)$

where $\omega$ is the angular velocity $(=2\pi f)$ and $\hat{V}_2$ is the peak value of $V_2$.

Then

$$V_1 = \hat{V}_2 \exp(j\omega t).\exp\left[-\frac{(A+jB)}{2}\right]$$

$$= \hat{V}_2 \exp\left(-\frac{A}{2}\right).\exp\left[j\left(\omega t - \frac{B}{2}\right)\right].$$

This is a voltage of peak value $\exp\left(-\frac{A}{2}\right)$ of the peak voltage at 2, and lagging behind the latter by $\frac{B}{2}$ radians.

$A$ is known as the *image attenuation coefficient*,

and $B$ is known as the *image phase-shift coefficient*.

In all formulæ where the natural base $\varepsilon$ is used, $A$ is given in *nepers* and $B$ in *radians*. $V_1I_1$ and $V_2I_2$ differ by $N$ nepers if

$$\sqrt{(V_1I_1)} = \exp(\pm N).\sqrt{(V_2I_2)}.$$

To avoid the use of natural logarithms, the *decibel* is often used, and $V_1I_1$ and $V_2I_2$ differ by $D$ decibels if

$$(V_1I_1) = 10^{\pm\frac{D}{10}}.(V_2I_2).$$

It can easily be shown that 1 neper = 8·686 decibels, and that 1 db. = 0·1151 neper (1(xii)).

Let us now make $Z_1$ and $Z_2$ pure reactances. Then $\frac{Z_1}{Z_2}$ will be wholly real, as will be cosh $P$.

But $$\cosh P = \cosh (A+jB)$$
$$= \cosh A \cos B + j \sinh A \sin B$$

and is real.

Hence $\sinh A \sin B = 0$ . . . . . 5(ii)

i.e., either $\sinh A = 0$, i.e. $A = 0$, $B \neq 0$ . . 5(iii)

or $\sin B = 0$, i.e. $B = n\pi$, $A \neq 0$ . . 5(iv)

As $Z_1$ and $Z_2$ vary with frequency one of these two conditions must always hold. The first condition forms what is known as a *pass-band* (i.e., $A = 0$, or no attenuation) and the second is known as an *attenuating-band* (i.e. $A \neq 0$).

cosh $P$ may take up any value between $-\infty$ and $+\infty$. Three ranges are of interest.

(*a*) $-\infty < \cosh P < -1$. cosh $A$ is always positive and greater than 1. Hence cos $B$ must be equal to $-1$. $A$ is then given by

$$\left.\begin{aligned} A &= \cosh^{-1}.[-\cosh P] \\ \text{and} \quad B &= (2n+1)\pi \end{aligned}\right\} \quad . \quad . \quad . \quad 5(v)$$

This is an attenuating-band.

(*b*) $-1 < \cosh P < +1$. cosh $A$ cannot be less than 1.

Hence $$\left.\begin{aligned} A &= 0 \\ B &= \cos^{-1}[\cosh P] \end{aligned}\right\} \quad . \quad . \quad . \quad 5(vi)$$

This is a pass-band.

(*c*) $1 < \cosh P < +\infty$. cosh $A$ is positive, hence cos $B$ must also be positive, and $$\left.\begin{aligned} A &= \cosh^{-1}[\cosh P] \\ B &= 2n\pi \end{aligned}\right\} \quad . \quad . \quad . \quad 5(vii)$$

This change of cosh $P$ from $-\infty$ to $+\infty$ may occur partially, or any number of times as the frequency varies from zero to infinity. There will therefore be a series of pass-bands alternating with attenuating-bands. The frequencies at which the network passes over from a pass-band to an attenuating-band, or *vice versa*, are known as *cut-off frequencies*.

Cut-off frequencies are given by

$$\cosh P = \pm 1 \quad . \quad . \quad . \quad . \quad . \quad 5(\text{viii})$$

and for the basic half-section are given by

$$1+2\frac{Z_1}{Z_2} = \pm 1$$

and

$$\left.\begin{aligned} &\frac{Z_1}{Z_2} = 0 \text{ or } -1 \\ \text{i.e. } &Z_1 = 0,\ Z_2 \neq 0;\ Z_2 = \pm\infty,\ Z_1 \neq \infty;\ Z_2 = -Z_1 \end{aligned}\right\} \quad . \quad 5(\text{ix})$$

It has been shown that in a pass-band where the network is made of pure reactances, $\frac{\partial B}{\partial \omega}$ is always positive.* This enables us to give a sign to the value of $B$ which on calculation from any of the formulæ given has an indeterminate sign.

As $Z_1$ and $Z_2$ are pure reactances, let us write them as $jX_1$ and $jX_2$ respectively. Then, from 3(iii)

$$\begin{aligned} Z_{01} &= \sqrt{[jX_1(jX_1+jX_2)]} \\ &= X_2\sqrt{\left[-\left(\frac{X_1^2}{X_2^2}+\frac{X_1}{X_2}\right)\right]}. \end{aligned}$$

Now in a pass-band $-1 < \frac{Z_1}{Z_2} < 0$ whence $-1 < \frac{X_1}{X_2} < 0$ and $\frac{X_1^2}{X_2^2}+\frac{X_1}{X_2}$ is negative. It follows that $Z_{01}$ is real, and as a passive network cannot have a negative resistance, $Z_{01}$ is a pure resistance.

In an attenuating range the reverse holds and $Z_{01}$ is purely reactive. A network theorem † shows that for any pure reactance $\frac{\partial X}{\partial \omega}$ is always positive.

Thus, in pass-ranges the image impedances are purely resistive, and in attenuating ranges they are purely reactive.

* "Theory and Design of Wave-filters", by Zobel, *B.S.T.J.*, Vol. 2, No. 1, Jan. 1923.

† Foster, *B.S.T.J.*, April 1924.

## 6. $m$-DERIVATION.

From the preceding sections we have seen that when a half-section is placed between generator and load whose impedances are equal to the image impedances of the ends of the network adjacent to generator and load respectively, the relationship between root-volt-amps. entering to those leaving the half-section can be determined by the aid of the image transfer coefficient $\frac{P}{2}$. If half-sections are joined together in cascade, so that at each junction the image impedance of the half-section on one side of the junction is equal to the image impedance of the half-section on the other side of the junction, the image impedances of the whole network are then equal to those of the free ends of the terminal half-sections, and the image transfer coefficient of the whole network is equal to the sum of the image transfer coefficients of its constituent half-sections. It is therefore important for us to be able to modify our basic half-section so that one of its image impedances is unaltered whilst its image transfer coefficient is altered (preferably in a way which is to our advantage). One such way of modifying a basic half-section is known as *m-derivation.*

Starting with a basic half-section having image impedances $Z_{01}$ and $Z_{02}$, we derive two modified half-sections, one having image impedances $Z_{01}$ and $Z_{02m}$, and the other having image impedances $Z_{01m}$ and $Z_{02}$. The former is known as a *mid-series derived half-section*, the latter as a *mid-shunt derived half-section.*

**6.1. Mid-series Derivation.** Here we make the impedance of the series arm $mZ_1$. The impedance of the shunt arm which will leave the mid-series image impedance unaltered at $Z_{01}$ is $\frac{1-m^2}{m}Z_1+\frac{1}{m}Z_2$ as shown in Fig. 7($a$). Replacing $Z_1$ and $Z_2$ in 3 (iii) by these modified values we get

$$\left.\begin{aligned} Z_{02m} &= [(1-m^2)Z_1+Z_2].\sqrt{\left[\frac{Z_1}{Z_1+Z_2}\right]} \\ &= \frac{Z_1Z_2}{Z_{01m}} \text{ from (iii) below} \end{aligned}\right\} \quad . \quad . \quad 6(i)$$

where $Z_{02m}$ is the mid-shunt image impedance of the mid-series $m$-derived half-section.

From 3(v) a similar modification to that used for 3(iv) gives

$$\left.\begin{aligned} \sinh \frac{P_m}{2} &= m\sqrt{\left[\frac{Z_1}{(1-m^2)Z_1+Z_2}\right]} \\ \text{or} \qquad \cosh P_m &= \frac{(1+m^2)Z_1+Z_2}{(1-m^2)Z_1+Z_2} \end{aligned}\right\} \quad . \quad . \quad 6\text{(ii)}$$

where $\frac{P_m}{2}$ is the image transfer coefficient of the mid-series $m$-derived half-section.

**6.2. Mid-shunt Derivation.** In this derivation we make the impedance of the shunt arm $\frac{1}{m}Z_2$, and in order to keep the mid-shunt image impedance equal to $Z_{02}$, the admittance of the series arm must be $\frac{1}{mZ_1}+\frac{1-m^2}{mZ_2}$ as shown in Fig. 7($c$), and from 3(iii)

$$\left.\begin{aligned} Z_{01m} &= \left[\frac{Z_1Z_2}{(1-m^2)Z_1+Z_2}\right]\sqrt{\frac{Z_1+Z_2}{Z_1}} \\ &= \frac{Z_1Z_2}{Z_{02m}} \text{ from (i) above} \end{aligned}\right\} \quad . \quad . \quad 6\text{(iii)}$$

where $Z_{01m}$ is the mid-series image impedance of the mid-shunt $m$-derived half-section.

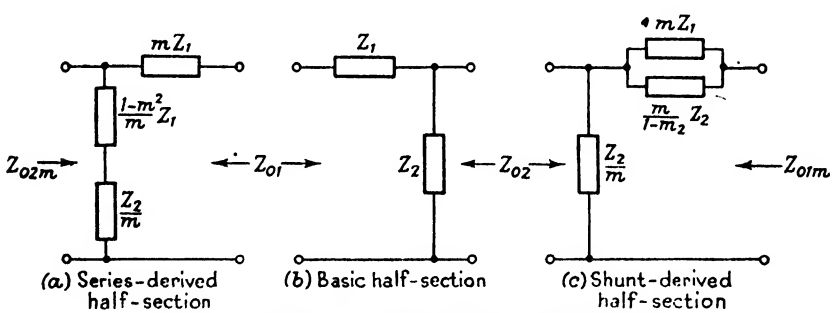


FIG. 7.—Series and Shunt-derived Half-sections.

From 3(v) we find that the image transfer coefficient of the mid-shunt $m$-derived half-section is equal to that of the mid-series $m$-derived half-section and is given by 6(ii) above.

In both mid-series and mid-shunt $m$-derivation, $P_m$ is infinite when

$$(1-m^2)Z_1+Z_2 = 0 \quad . \quad . \quad . \quad 6\text{(iv)}$$

whence

$$Z_{01m} = j\,\infty \text{ and } Z_{02m} = j0 \quad . \quad . \quad . \quad 6\text{(v)}$$

From 5(ix) cut-off frequencies of the basic half-section are given by

$$\frac{Z_1}{Z_2} = 0 \text{ or } -1$$

and on substituting the series- and shunt-arm impedances of either of the $m$-derived half-sections for $Z_1$ and $Z_2$ respectively, the same condition 5(ix) is found to hold for the cut-off frequencies of the $m$-derived half-sections. Thus the process of $m$-derivation leaves unaltered one image impedance and the cut-off frequencies, but modifies the other image impedance and the image transfer coefficient.

**6.3. *mm'*-Derivation.** We are not restricted to any par-

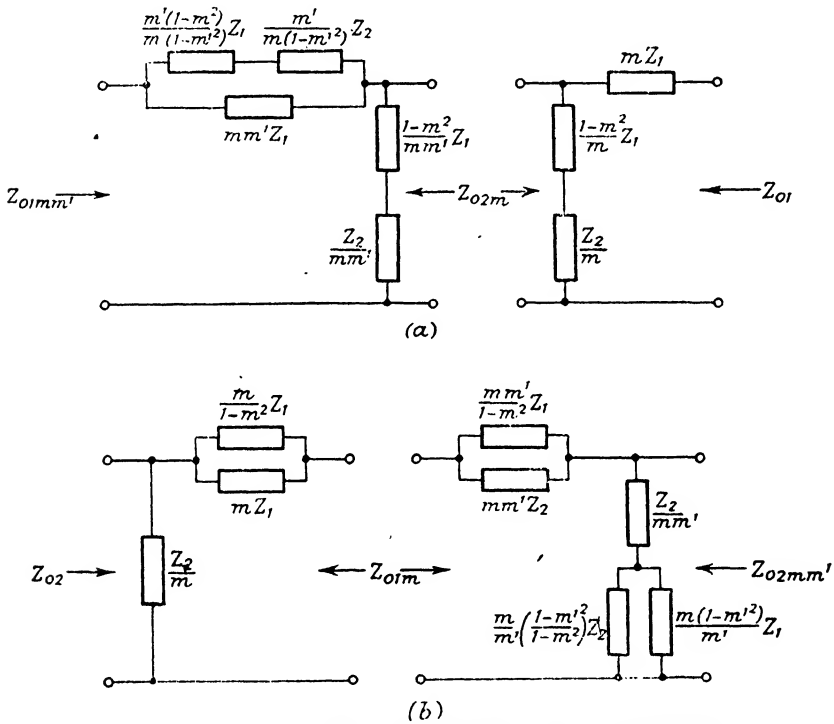


FIG. 8.—Shunt and Series Double-($mm'$) derived Half-sections.

ticular half-section from which to $m$-derive, and we may therefore use one of the $m$-derived half-sections already discussed from which to derive a further half-section. This process is known as *double-derivation* or *mm'-derivation* where $m$ is the parameter referring to the first derivation and $m'$ is that referring to the second derivation. Such half-sections are shown in Fig. 8($a$) and ($b$).

The double-derived image impedances are given by

$$Z_{01mm'} = \frac{Z_1 Z_2}{Z_{02mm'}} = \sqrt{[Z_1^2 + Z_1 Z_2]}\frac{(1-m^2)Z_1 + Z_2}{(1-m^2m'^2)Z_1 + Z_2} \quad . \quad 6(\text{vi})$$

and the image transfer coefficient is given by

$$\cosh P_{mm'} = \frac{(1+m^2m'^2)Z_1+Z_2}{(1-m^2m'^2)Z_1+Z_2} \quad . \quad . \quad 6(\text{vii})$$

and is the same as that for a single $m$-derived half-section of $m$ equal to $mm'$.

On the score of attenuation there is no gain in using an $mm'$ derivation, but the double-derived image impedances $Z_{01mm'}$ and $Z_{02mm'}$ show desirable characteristics. Zobel has shown that in a wave filter a double-derived half-section having $m = 0{\cdot}723$ and $m' = 0{\cdot}413$, $Z_{01mm'}$ and $Z_{02mm'}$ differ from $\sqrt{[Z_1Z_2]}$ by less than $\pm 2$ per cent. for values of $\frac{Z_1}{Z_2}$ between 0 and $-0{\cdot}92$. This half-section is thus used when it is necessary to present a very uniform image impedance in the pass-band of a filter.

Laurent * has shown that if the portion of a pass-band over which a good impedance is required extends over values of $\frac{Z_1}{Z_2}$ lying between 0 and $-\rho$ ($\rho < 1$) the least square deviation from a constant image impedance is obtained if

$$\left.\begin{aligned} m^2 &= 1 - \frac{35}{3\rho^2}\left[1+\sqrt{\left(1-\frac{6}{7}\rho+\frac{3}{35}\rho^2\right)}\right. \\ &\qquad \left. -\sqrt{\left\{2-\frac{6}{7}\rho+2\sqrt{\left(1-\frac{6}{7}\rho+\frac{3}{35}\rho^2\right)}\right\}}\right] \\ m'^2 &= \frac{1}{m^2} - \left(\frac{1}{m^2}-1\right)\sqrt{\left(1-\frac{6}{7}\rho+\frac{3}{35}\rho^2\right)} \end{aligned}\right\} \quad . \quad . \quad 6(\text{viii})$$

If $Z_1$ and $Z_2$ are physically realizable, the derived half-sections will be physically realizable only if $\frac{1-m^2}{m}$ is positive. This means that $m$ must be positive and must not exceed 1.†

* "Théorie et application pratique des demi-cellules à trois branches pour filtres électriques." T. Laurent, *Ericsson Technics*, 1934, No. 5.

† In Section 17 it will be shown that in other types of filter networks $m$ may exceed 1.

## 7. EQUIVALENT NETWORKS.

So far we have considered the image parameters of a network. If a network is made up of half-sections whose image impedances are matched at the junctions between the half-sections, we end up with a network having image impedances equal to the free end image impedances of the two terminal half-sections, and an image transfer coefficient equal to the sum of those of its constituent half-sections. Let the image characteristics be $Z_{0A}$, $Z_{0B}$ and $P_{AB}$. Then if the ends of the network are terminated by the correct image impedances, we can calculate the root-volt-amps. ratio between the input (one end of the network) and the output (the other end of the network). In general, however, a network is not terminated by its correct image impedances, and in such a case the root-volt-amps. ratio calculation becomes more difficult. We shall calculate this ratio with the aid of an *equivalent network*. Such a network simulates the actual network in all external respects (i.e. image impedance and image transfer coefficient) but internally is of such a form that calculation is made more easy.

As the network we are considering has only three parameters (the image parameters), the equivalent network must have at least three independent elements. These three elements may be put together either in the form of a T, or of a Π. The two forms of equivalent networks are known as *equivalent-T* and *equivalent-Π networks*.

Let us first consider the case where the two image impedances $Z_{0A}$ and $Z_{0B}$ are equal. Then there will be no way of distinguishing one end of the network from the other and the equivalent network will thus be symmetrical. The equivalent-$T$ network will be as shown in Fig. 9 with $Z_{0A} = Z_{0B}$ and $Z_a = Z_b$.

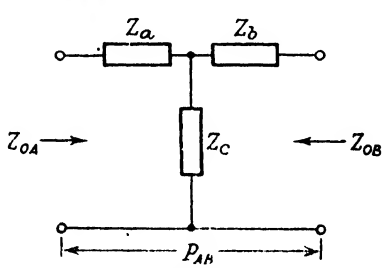


FIG. 9.—General $T$-network.

For symmetrical network

$$Z_{0A} = Z_{0B} \text{ and } Z_a = Z = Z_{0A} \tanh \frac{P_{AB}}{2}.$$

$$Z_c = \frac{Z_{0A}}{\sinh P_{AB}}.$$

If one end of the network is closed by its image impedance, we know that the impedance at the other end is equal to its image impedance, i.e.

$$Z_{0A} = Z_a + \frac{(Z_a+Z_{0A})Z_c}{Z_a+Z_c+Z_{0A}} \quad . \quad . \quad . \quad 7(\text{i})$$

When so terminated we know that the root-volt-amps. at $A$ are equal to exp $(\pm P_{AB})$ times those at $B$, and since the two image impedances are equal the root-volt-amp. ratio is equal to the current or voltage ratios.

If a unit p.d. is applied at the end $A$ of the network, the current entering the network is equal to $\frac{1}{Z_{0A}}$. The current leaving the network at the end $B$ is equal to $\frac{1}{Z_{0A}}\left[\frac{Z_c}{Z_a+Z_c+Z_{0A}}\right]$. The ratio of these two currents is equal to exp $(P_{AB})$, i.e.

$$\exp(P_{AB}) = \frac{Z_a+Z_c+Z_{0A}}{Z_c} \quad . \quad . \quad . \quad 7(\text{ii})$$

Substituting in (i) for $\frac{Z_a+Z_c+Z_{0A}}{Z_c}$

$$Z_{0A} = Z_a + (Z_a+Z_{0A})\exp(-P_{AB})$$

which reduces to $$Z_a = Z_{0A}\tanh\frac{P_{AB}}{2} \quad . \quad . \quad . \quad 7(\text{iii})$$

and substituting for $Z_a$ in (ii) we find that

$$Z_c = \frac{Z_{0A}}{\sinh P_{AB}} \quad . \quad . \quad . \quad 7(\text{iv})$$

In a similar manner the equivalent-Π symmetrical network may also be deduced. Its configuration and element values are shown in Fig. 10.

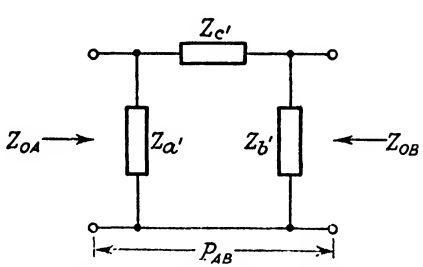


FIG. 10.—General $\pi$-network.

For symmetrical network

$Z_{0A} = Z_{0B}$, and $Z_{a'} = Z_{b'} = Z_{0A}\coth\frac{P_{AB}}{2}$

$Z_{c'} = Z_{0A}\sinh P_{AB}$.

We could find the equivalent networks for the general network where $Z_{0A}$ and $Z_{0B}$ are not equal, but this would involve solving three simultaneous equations giving $Z_a$, $Z_b$ and $Z_c$, or $Z_{a'}$, $Z_{b'}$, and $Z_{c'}$. A perfect transformer has the property of transforming a p.d. $v_{(i)}$ across winding (i) to a p.d. of $\phi v_{(i)}$ across the winding (ii), of transforming a current $i_{(i)}$ through winding (i) to a current $\frac{i_{(i)}}{\phi}$, and an impedance $Z_{(i)}$ across winding (i) to an impedance $\phi^2 Z_{(i)}$ across winding (ii), where $\phi$ is the turns ratio and $\phi^2$ the impedance ratio between windings (ii) and (i). A perfect transformer with impedance ratio $Z_{0A} : Z_{0B}$ placed with its $Z_{0A}$ winding connected to a symmetrical-$T$ or -$\Pi$ network will transform it to a network having two unequal image impedances $Z_{0A}$ and $Z_{0B}$. We can use these equivalent networks to determine the behaviour of a given network between given terminal impedances.

## 8. INSERTION CHARACTERISTICS.

If a generator of internal impedance $Z_A$ be connected to a load of impedance $Z_B$ and a p.d. of $V_B$ and a current of $I_B$ be set up across and through the load respectively, and if a network be inserted between generator and load giving rise to $V_{B'}$ and $I_{B'}$ across and through the load respectively, the insertion factor is given by $\frac{V_B}{V_{B'}}$ or $\frac{I_B}{I_{B'}}$ and the *insertion loss* is given by

$$\left.\begin{aligned} A' &= \log_\varepsilon \left|\frac{V_B}{V_{B'}}\right| \\ &= \log_\varepsilon \left|\frac{I_B}{I_{B'}}\right| \end{aligned}\right\} \quad . \quad . \quad . \quad 8(i)$$

and the *insertion phase shift* by

$$\left.\begin{aligned} B' &= \arg \frac{V_B}{V_{B'}} \\ &= \arg \frac{I_B}{I_{B'}} \end{aligned}\right\} \quad . \quad . \quad . \quad . \quad 8(ii)$$

where $|r.\exp(j\theta)| = r$

$\arg\{r.\exp(j\theta)\} = \theta.$

$A'$ may be expressed in decibels by

$$\left.\begin{aligned} A'_{db} &= 20 \log_{10} \left|\frac{V_B}{V_{B'}}\right| \\ &= 20 \log_{10} \left|\frac{I_B}{I_{B'}}\right| \end{aligned}\right\} \quad . \quad . \quad 8(ia)$$

Consider the case of a network of image impedances $Z_{0A}$ and $Z_{0B}$ and image transfer coefficient $P_{AB}$, inserted between generator of internal impedance $Z_A$ and load of impedance $Z_B$, $Z_A$ and $Z_{0A}$, $Z_B$ and $Z_{0B}$ being together. When the network is absent

$$I_B = \frac{E}{Z_A+Z_B} \quad . \quad . \quad . \quad . \quad 8(iii)$$

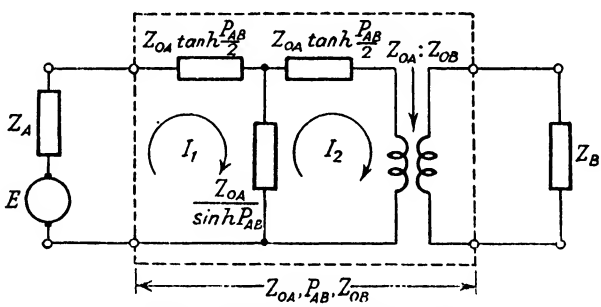


FIG. 11.—Insertion-loss of Network $Z_{0A}$, $P_{AB}$, $Z_{0B}$ between Impedance $Z_A$ and $Z_B$.

We can use the equivalent-$T$ network to calculate the current $I_{B'}$ when the network is inserted, as shown in Fig. 11. We have to set up two equations from which $I_2$ may be determined, and $I_{B'}$ is obtained from $I_2$ by multiplication by $\sqrt{\frac{Z_{0A}}{Z_{0B}}}$.

The two equations are

$$E = I_1\left[Z_A+Z_{0A}\left(\tanh \frac{P_{AB}}{2}+\frac{1}{\sinh P_{AB}}\right)\right] - I_2 \frac{Z_{0A}}{\sinh P_{AB}}$$

and

$$0 = -I_1 \frac{Z_{0A}}{\sinh P_{AB}} + I_2\left[Z_B \cdot \frac{Z_{0A}}{Z_{0B}}+Z_{0A}\left(\tanh \frac{P_{AB}}{2}+\frac{1}{\sinh P_{AB}}\right)\right]$$

and after expressing the hyperbolic functions in their exponential forms and eliminating $I_1$ we get

$$\frac{1}{I_2} = \frac{\exp(P_{AB})}{2E} \cdot \frac{(Z_A+Z_{0A})(Z_B+Z_{0B})}{Z_{0B}}$$
$$\left[1 - \frac{Z_A - Z_{0A}}{Z_A+Z_{0A}} \cdot \frac{Z_B - Z_{0B}}{Z_B+Z_{0B}} . \exp(-2P_{AB})\right]$$

and remembering that $I_{B'}$ is equal to $I_2\sqrt{\dfrac{Z_{0A}}{Z_{0B}}}$ and that the insertion factor is equal to $\dfrac{E}{Z_A+Z_B}\left[\dfrac{1}{I_{B'}}\right]$, we finally get the insertion loss $A'$ and the insertion phase shift $B'$ from

$$\left.\begin{aligned}
A' &= -\log_\varepsilon\left|\frac{Z_A+Z_B}{2\sqrt{(Z_AZ_B)}}\right|+\log_\varepsilon\left|\frac{Z_A+Z_{0A}}{2\sqrt{(Z_AZ_{0A})}}\right|+\log_\varepsilon\left|\frac{Z_B+Z_{0B}}{2\sqrt{(Z_BZ_{0B})}}\right| \\
&\quad +\log_\varepsilon\left|1-\frac{Z_A-Z_{0A}}{Z_A+Z_{0A}}\cdot\frac{Z_B-Z_{0B}}{Z_B+Z_{0B}}.\exp(-2P_{AB})\right|+A_{AB} \\
&\text{and} \\
B' &= -\arg\frac{Z_A+Z_B}{2\sqrt{(Z_AZ_B)}}+\arg\frac{Z_A+Z_{0A}}{2\sqrt{(Z_BZ_{0A})}}+\arg\frac{Z_B+Z_{0B}}{2\sqrt{(Z_BZ_{0B})}} \\
&\quad +\arg\left[1-\frac{Z_A-Z_{0A}}{Z_A+Z_{0A}}\cdot\frac{Z_B-Z_{0B}}{Z_B+Z_{0B}}.\exp(-2P_{AB})\right]+B_{AB}
\end{aligned}\right\}\quad 8(\text{iv})$$

where $P_{AB} = A_{AB}+jB_{AB}$.

$A'$ may be expressed in decibels as

$$\begin{aligned}
A'_{db} = &-20\log_{10}\left|\frac{Z_A+Z_B}{2\sqrt{(Z_AZ_B)}}\right|+20\log_{10}\left|\frac{Z_A+Z_{0A}}{2\sqrt{(Z_AZ_{0A})}}\right| \\
&+20\log_{10}\left|\frac{Z_B+Z_{0B}}{2\sqrt{(Z_BZ_{0B})}}\right| \\
&+20\log_{10}\left|1-\frac{Z_A-Z_{0A}}{Z_A+Z_{0A}}\cdot\frac{Z_B-Z_{0B}}{Z_B+Z_{0B}}\exp(-2P_{AB})\right|+A_{AB\,\text{db}}.
\end{aligned}$$

In the expressions for both $A'$ and $B'$, the first term is due to the mismatch between generator and load impedances, the second is due to the mismatch between generator impedance and the input image impedance of the network, the third term is due to the mismatch between the output image impedance of the network and the load impedance, the fourth term is due to the interaction caused by the mismatches at both ends of the network, and the fifth term is due to the image transfer coefficient of the network.

As was shown in Section 5, the image impedance of a wave filter in its attenuating bands is a pure reactance. On substituting $jX$ for $Z_{0A}$ or $Z_{0B}$ in the second or third term respectively of (iv), and making $Z_A$ or $Z_B$ purely resistive, it can be shown that these terms lie between $+\infty$ and $-\frac{1}{2}\log_\varepsilon 2$. Thus the insertion loss may be as much as $2\times 0{\cdot}345$ nepers (6 db.) less than the attenuation coefficient of the wave filter in the latter's attenuating-band. This is important when we consider the design of a particular wave filter, as we shall have to design the complete filter to have

an attenuation coefficient which is 0·69 neper, or 6 db. greater than the minimum design requirement.

Fig. 12 enables the interaction term of the insertion loss to be calculated once $\frac{Z_A - Z_{0A}}{Z_A + Z_{0A}} \cdot \frac{Z_B - Z_{0B}}{Z_B + Z_{0B}} . \exp(-2P_{AB})$ has been expressed in the form $r.\exp j\theta$. The terms $\frac{Z_A - Z_{0A}}{Z_A + Z_{0A}}$ may be

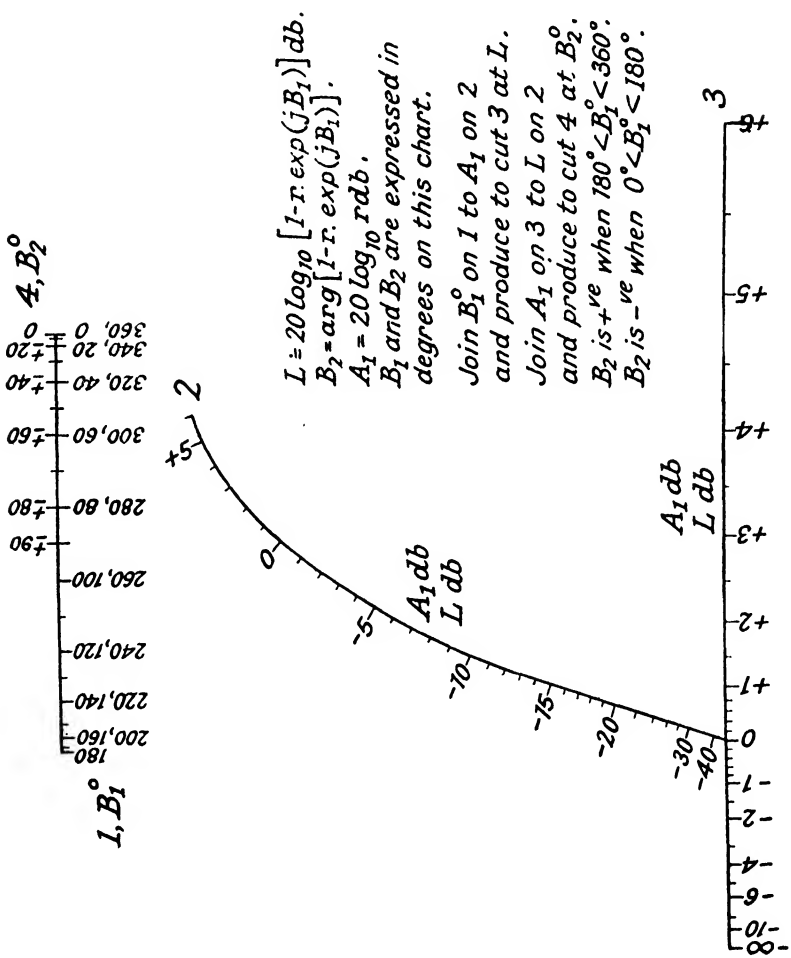


FIG. 12.—Nomogram for Calculating Interaction-loss and Phase-shift.

obtained when $Z_A$ is resistive and $Z_{0A}$ the image impedance of a filter from the single line nomograph in Fig. 12.

We will now consider some of the possible ladder-type wave filters of the low-pass, high-pass, band-pass and band-stop classes.

## 9. LOW-PASS FILTER HALF-SECTIONS.

Let us make the series arm of the basic half-section an inductor of inductance $L_k$. Then $Z_1$ will be equal to $j\omega L_k$. From Section 4, the condition for a constant-$k$ half-section is given by $Z_1 Z_2 = R_0^2$. Hence $Z_2$ is equal to $\frac{R_0^2}{Z_1}$, i.e. $\frac{R_0^2}{j\omega L_k}$. This impedance is that of a capacitor of capacitance $\frac{L_k}{R_0^2}$, which we will write as $C_k$ (Fig. 13(*b*)).

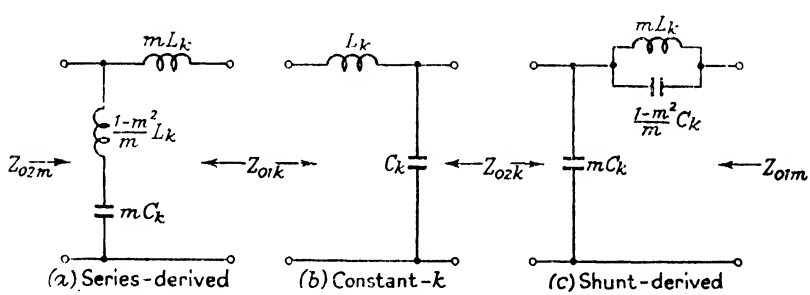


FIG. 13.—Low-pass Half-sections. $R_0^2 = \frac{L_k}{C_k}$; $\omega_0^2 = \frac{1}{L_k C_k}$.

From this it follows that $R_0^2$ is equal to $\frac{L_k}{C_k}$.

Substituting for $Z_1$ and $Z_2$ in 4(i) and 4(ii) we get

$$\left.\begin{aligned} Z_{01k} &= \sqrt{\frac{L_k}{C_k}} \cdot \sqrt{[1 - \omega^2 L_k C_k]} \\ Z_{02k} &= \sqrt{\frac{L_k}{C_k}} \cdot \frac{1}{\sqrt{[1 - \omega^2 L_k C_k]}} \end{aligned}\right\} \quad . \quad . \quad 9(ia)$$

$$\left.\begin{aligned} \sinh\frac{P}{2} &= j\omega\sqrt{(L_kC_k)} \\ \text{or} \qquad \cosh P &= 1 - 2\omega^2L_kC_k \end{aligned}\right\} \quad . \quad . \quad . \quad . \quad 9(\text{ii}a)$$

From 5(viii), cut-off frequencies are given by

$$\cosh P = \pm 1$$

i.e.

$$1 - 2\omega^2L_kC_k = \pm 1$$

whence

$$\omega = 0 \text{ or } \frac{1}{\sqrt{(L_kC_k)}} \quad . \quad . \quad 9(\text{iii})$$

When $0 < \omega < \dfrac{1}{\sqrt{(L_kC_k)}}$, it will be seen that $1 > \cosh P > -1$ and this is a pass-band. The half-section is therefore known as a *low-pass half-section.*

Writing

$$\left.\begin{aligned} R_0 &= \sqrt{\frac{L_k}{C_k}}, \\ \omega_0 &= \frac{1}{\sqrt{(L_kC_k)}} \\ \text{and} \qquad \omega &= x\omega_0 \end{aligned}\right\} \quad . \quad . \quad . \quad . \quad 9(\text{iv})$$

($ia$) and (ii$a$) reduce to

$$\left.\begin{aligned} Z_{01k} &= R_0\sqrt{[1 - x^2]} \\ Z_{02k} &= \frac{R_0}{\sqrt{[1 - x^2]}} \end{aligned}\right\} \quad . \quad . \quad . \quad 9(\text{i})$$

$$\left.\begin{aligned} \sinh\frac{P}{2} &= jx \\ \cosh P &= 1 - 2x^2 \end{aligned}\right\} \quad . \quad . \quad . \quad . \quad 9(\text{ii})$$

When $0 < x < 1$, $1 > \cosh P > -1$ and from 5(vi)

$$\left.\begin{aligned} A &= 0 \\ B &= \cos^{-1}(1 - 2x^2) \end{aligned}\right\} \quad . \quad . \quad 9(\text{iii})$$

This is a pass-band extending from $\omega = 0$ to $\omega_0$ (i.e. $x = 0$ to 1). When $1 < x < \infty$, $-1 > \cosh P > -\infty$ and from 5(v)

$$\left.\begin{aligned} A &= \cosh^{-1}(2x^2 - 1) \\ B &= \pi \end{aligned}\right\} \quad . \quad . \quad 9(\text{iv})$$

This is an attenuating-band extending from $\omega_0$ to $\infty$ (i.e. $x = 1$ to $\infty$).

**9.1. *m*-Derived Half-Sections.** From Section 6 mid-series and mid-shunt half-sections may be derived from the basic low-pass half-section of Fig. 13($b$) and are shown in Figs. 13($a$) and 13($c$)

respectively. For these half-sections the derived image impedances are obtained from 6(iii) and 6(i), and

$$\left.\begin{aligned} Z_{01m} &= R_0\frac{\sqrt{(1-x^2)}}{1-x^2(1-m^2)} \\ &= R_0\frac{x_{2\infty}{}^2\sqrt{(1-x^2)}}{x_{2\infty}{}^2-x^2} \\ Z_{02m} &= R_0\frac{1-x^2(1-m^2)}{\sqrt{(1-x^2)}} \\ &= R_0\frac{x_{2\infty}{}^2-x^2}{x_{2\infty}{}^2\sqrt{(1-x^2)}} \end{aligned}\right\} \quad . \quad . \quad . \quad 9(\text{vi})$$

where $$x_{2\infty}{}^2 = \frac{1}{1-m^2} \quad . \quad . \quad . \quad . \quad . \quad 9(\text{vii})$$

From 6(ii)

$$\left.\begin{aligned} \sinh\frac{P_m}{2} &= jmx\sqrt{\left[\frac{1}{1-x^2(1-m^2)}\right]} \\ &= jx\sqrt{\left[\frac{x_{2\infty}{}^2-1}{x_{2\infty}{}^2-x^2}\right]} \\ \cosh P_m &= \frac{(1+m^2)x^2-1}{(1-m^2)x^2-1} \\ &= \frac{(2x_{2\infty}{}^2-1)x^2-x_{2\infty}{}^2}{x^2-x_{2\infty}{}^2} \end{aligned}\right\} \quad . \quad 9(\text{viii})$$

$x_{2\infty}$ is the value of $x$ for which $P$ is infinite and the frequency corresponding to this value is known as the *frequency of peak attenuation*. In American literature $x_{2\infty}$ is written as $a$. It will be seen that (i) and (ii) can be obtained from (vi) and (viii) if we make $m = 1$ and $x_{2\infty} = \infty$.

$$\left.\begin{aligned} &\text{When } 0 < x < 1,\ 1 > \cosh P_m > -1 \\ &\text{and} \qquad A = 0 \\ &\qquad B = \cos^{-1}\frac{(1+m^2)x^2-1}{(1-m^2)x^2-1} \\ &\qquad\quad = \cos^{-1}\frac{(2x_{2\infty}{}^2-1)x^2-x_{2\infty}{}^2}{x^2-x_{2\infty}{}^2} \\ &\text{When} \qquad 1 < x < x_{2\infty},\ -1 > \cosh P_m > -\infty \\ &\qquad A = \cosh^{-1}\frac{1-(1+m^2)x^2}{(1-m^2)x^2-1} \\ &\qquad\quad = \cosh^{-1}\frac{x_{2\infty}{}^2-(2x_{2\infty}{}^2-1)x^2}{x^2-x_{2\infty}{}^2} \\ &\qquad B = \pi \end{aligned}\right\} \quad . \quad 9(\text{ix})$$

$$\left.\begin{aligned} \text{When}\quad x_{2\infty} < x < \infty,\ +\infty > \cosh P > (2x_{2\infty}{}^2 - 1) \\ A &= \cosh^{-1}\frac{(1+m^2)x^2 - 1}{(1-m^2)x^2 - 1} \\ &= \cosh^{-1}\frac{x_{2\infty}{}^2 - (2x_{2\infty}{}^2 - 1)x^2}{x_{2\infty}{}^2 - x^2} \\ B &= 0 \end{aligned}\right\} \quad . \quad 9(\text{ix})$$

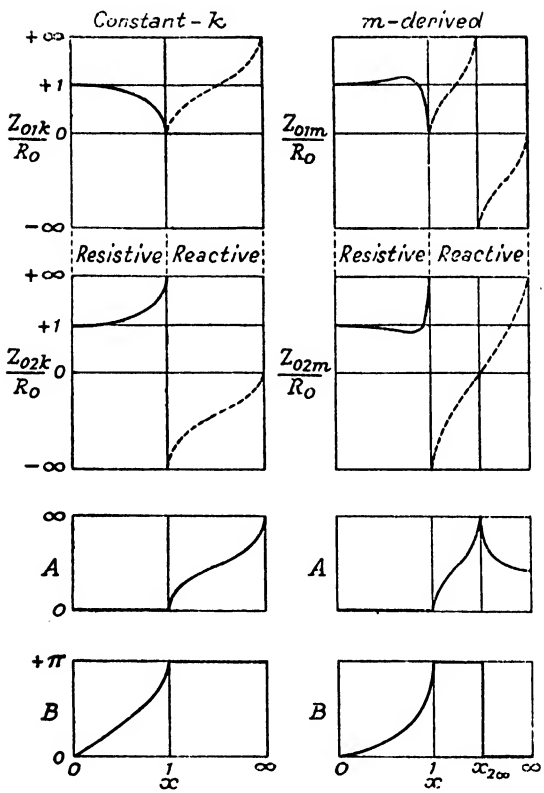


FIG. 14.—Low-pass Filter Characteristics. Full Sections.

Fig. 14 shows the general form taken by the image impedances and the image transfer coefficients of constant-$k$ and $m$-derived low-pass filter half-sections.

Section 14 deals with the calculation and design of filters of all types, and (viii) above is modified to enable the values of $A$ and $B$ to be determined by means of a template.

## 10. HIGH-PASS FILTER HALF-SECTIONS.

If we interchange the series and shunt arms of the constant-$k$ low-pass half-section of Fig. 13($b$) the structure we obtain is still a constant-$k$ half-section and is shown in Fig. 15($b$).

Substituting $\frac{1}{j\omega C_k}$ for $Z_1$ and $j\omega L_k$ for $Z_2$ in 4(i) and 4(ii) we get

$$\left.\begin{aligned} Z_{01k} &= R_0\sqrt{\left[1-\frac{1}{x^2}\right]} \\ Z_{02k} &= R_0\frac{1}{\sqrt{\left[1-\frac{1}{x^2}\right]}} \end{aligned}\right\} \quad . \quad . \quad . \quad 10(\text{i})$$

$$\left.\begin{aligned} \sinh\frac{P}{2} &= \frac{-j}{x} \\ \cosh P &= 1-\frac{2}{x^2} \end{aligned}\right\} \quad . \quad . \quad . \quad . \quad 10(\text{ii})$$

where
$$x = \frac{\omega}{\omega_0}$$
$$\omega_0^2 = \frac{1}{L_kC_k}$$
$$R_0^2 = \frac{L_k}{C_k}.$$

When $0 < x < 1$, $-\infty < \cosh P < -1$ and

$$\left.\begin{aligned} A &= \cosh^{-1}\left(\frac{2}{x^2}-1\right) \\ B &= -\pi \end{aligned}\right\} \quad . \quad . \quad . \quad 10(\text{iii})$$

This is an attenuating-band extending from 0 to $\omega_0$ (i.e. $x = 0$ to 1).

When $1 < x < \infty$, $-1 < \cosh P < +1$ and

$$\left.\begin{aligned} A &= 0 \\ B &= \cos^{-1}\left(1-\frac{2}{x^2}\right) \end{aligned}\right\} \quad . \quad . \quad . \quad 10(\text{iv})$$

This is a pass-band extending from $\omega_0$ to $\infty$ (i.e. $x = 1$ to $\infty$).

The half-section is known as a *high-pass half-section.*

**10.1. *m*-Derived Half-Sections.** As in the case of the low-pass half-section we may use Section 6 to derive mid-series and mid-shunt $m$-derived half-sections from this basic half-section.

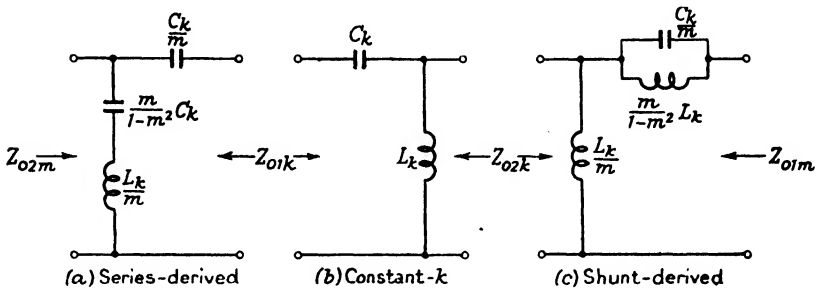


FIG. 15.—High-pass Half-sections. $R_0^2 = \frac{L_k}{C_k}$; $\omega_0^2 = \frac{1}{L_k C_k}$.

They are shown in Figs 15($a$) and 15($c$) respectively. The derived image impedances are obtained from 6(iii) and 6(i).

$$\left.\begin{aligned} Z_{01m} &= R_0 \frac{x\sqrt{(x^2-1)}}{x^2-(1-m^2)} \\ &= R_0 \frac{x\sqrt{(x^2-1)}}{x^2-x_{1\infty}^2} \\ Z_{02m} &= R_0 \frac{x^2-(1-m^2)}{x\sqrt{(x^2-1)}} \\ &= R_0 \frac{x^2-x_{1\infty}^2}{x\sqrt{(x^2-1)}} \end{aligned}\right\} \quad . \quad . \quad 10(\text{v})$$

where $$x_{1\infty}^2 = 1 - m^2 \quad . \quad . \quad . \quad . \quad 10(\text{vi})$$

From 6(ii)

$$\left.\begin{aligned} \sinh\frac{P_m}{2} &= jm\sqrt{\left[\frac{1}{x^2-(1-m^2)}\right]} \\ &= j\sqrt{\left[\frac{1-x_{1\infty}^2}{x^2-x_{1\infty}^2}\right]} \\ \cosh P_m &= \frac{(1+m^2)-x^2}{(1-m^2)-x^2} \\ &= \frac{(2-x_{1\infty}^2)-x^2}{x_{1\infty}^2-x^2} \end{aligned}\right\} \quad . \quad 10(\text{vii})$$

$x_{1\infty}$ is the value of $x$ for which $P_m$ is infinite and the corresponding value of frequency is the frequency of peak attenuation.

It will be seen on comparing these formulæ with those in Section 9, that one set may be obtained from the other by writing $\frac{1}{x}$ for $x$.

When $0 < x < x_{1\infty}$, $\left(\dfrac{2}{x_{1\infty}^2} - 1\right) < \cosh P < \infty$

$$\left.\begin{aligned}
A &= \cosh^{-1}\frac{(1+m^2) - x^2}{(1-m^2) - x^2} \\
&= \cosh^{-1}\frac{(2 - x_{1\infty}^2) - x^2}{x_{1\infty}^2 - x^2} \\
B &= 0 \\
\text{When}\quad x_{1\infty} < x < 1,\ -\infty < \cosh P < -1 \\
A &= \cosh^{-1}\frac{(1+m^2) - x^2}{x^2 - (1-m^2)} \\
&= \cosh^{-1}\frac{(2 - x_{1\infty}^2) - x^2}{x^2 - x_{1\infty}^2} \\
B &= -\pi \\
\text{When}\quad 1 < x < \infty,\ -1 < \cosh P < +1 \\
A &= 0 \\
B &= \cos^{-1}\frac{(1+m^2) - x^2}{(1-m^2) - x^2} \\
&= \cos^{-1}\frac{(2 - x_{1\infty}^2) - x^2}{x_{1\infty}^2 - x^2}
\end{aligned}\right\} \quad . \quad . \quad 10(\text{viii})$$

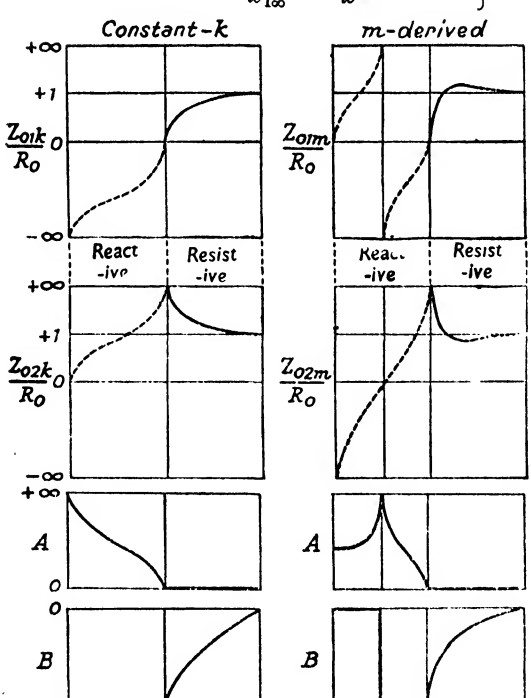


FIG. 16.—High-pass Filter Characteristics. Full Sections.

Fig. 16 shows the general form taken by the image impedances and image transfer coefficients of these high-pass filter half-sections. Section 14 deals with the method of calculation of $A$ and $B$ by the use of templates.

## 11. BAND-PASS FILTER HALF-SECTIONS.

Let us now make the series arm an inductor of inductance $\frac{1}{n}L_k$ in series with a capacitor of capacitance $nC_k$ where $n$ is a constant. The impedance of this arm is given by

$$Z_1 = j\frac{\left(\omega L_k - \frac{1}{\omega C_k}\right)}{n}$$

$$= jR_0\frac{x - \frac{1}{x}}{n}$$

if we continue to use the relationships

$$R_0^2 = \frac{L_k}{C_k}$$

$$\omega_0^2 = \frac{1}{L_k C_k}$$

$$x = \frac{\omega}{\omega_0}.$$

If we wish to make a constant-$k$ half-section of design impedance $R_0$,

$$Z_2 = jR_0\frac{n}{\frac{1}{x} - x}$$

$$= \frac{n}{j\left(\omega C_k - \frac{1}{\omega L_k}\right)}$$

which is the impedance of a capacitor of capacitance $\frac{1}{n}C_k$ in parallel

with an inductor of inductance $nL_k$. This network is shown in Fig. 17(*b*).

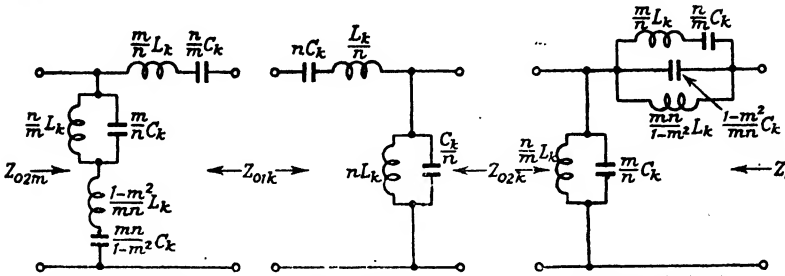


FIG. 17.—Band-pass Half-sections ($m$-derivation).

From 4(i) and 4(ii)

$$\left.\begin{aligned} Z_{01k} &= R_0 \frac{\sqrt{[n^2x^2 - (1-x^2)^2]}}{nx} \\ Z_{02k} &= R_0 \frac{nx}{\sqrt{[n^2x^2 - (1-x^2)^2]}} \end{aligned}\right\} \quad . \quad . \quad 11(ia)$$

$$\left.\begin{aligned} \sinh \frac{P}{2} &= -j\frac{1-x^2}{nx} \\ \cosh P &= 1 - 2\left[\frac{1-x^2}{nx}\right]^2 \end{aligned}\right\} \quad . \quad . \quad . \quad 11(ia)$$

Cut-off frequencies are given by $\cosh P = \pm 1$, i.e. by

$$-\left[\frac{1-x^2}{nx}\right]^2 = 0 \text{ or } -1.$$

These are

$$x = 1 \text{ or } \frac{\sqrt{(n^2+4)} \pm n}{2}.$$

Write

$$\left.\begin{aligned} x_1 &= \frac{\sqrt{(n^2+4)} - n}{2} \\ x_2 &= \frac{\sqrt{(n^2+4)} + n}{2} \end{aligned}\right\} \quad . \quad . \quad . \quad 11(iii)$$

then

$$\left.\begin{aligned} x_1x_2 &= 1 \\ n &= x_2 - x_1 \end{aligned}\right\}$$

At $x = 0$ and $x = \infty$ no current can be passed through the half-section as the series arm has an infinite impedance and the shunt arm has a zero impedance at both these values of $x$. Hence $x = 0$ and $\infty$ lie in attenuating-bands and a pass-band extends from $x_1$ to $x_2$. $n$ is then a measure of the *band-width*. The half-section is known as a *band-pass half-section*. The frequency corresponding to $x = 1$ is known as the *mid-band frequency* and is situated at the geometrical mean of the two cut-off frequencies.

The apparent cut-off frequency at $x = 1$ is a point at which both $A$ and $B$ are zero. The general network with a series-resonant circuit in the series arm and a parallel-resonant circuit in the shunt arm has two pass-bands separated by an attenuating-band and as the two resonant frequencies approach each other the two pass-bands also approach, joining when the series-arm and shunt-arm resonances occur at the same frequency. In this condition we have the constant-$k$ band-pass half-section we have just described, and $x = 1$ is a point at which two pass-bands have joined together. The half-section is therefore known as a *confluent band-pass half-section.*

We may substitute the functions of $x_1$ and $x_2$ for $n$ which were found in equations 11(iii), in 11(i*a*) and 11(ii*a*) as below

$$\left.\begin{aligned} Z_{01k} &= R_0 \frac{\sqrt{[n^2x^2-(1-x^2)^2]}}{nx} = R_0 \frac{\sqrt{[(x_2^2-x^2)(x^2-x_1^2)]}}{x(x_2-x_1)} \\ Z_{02k} &= R_0 \frac{nx}{\sqrt{[n^2x^2-(1-x^2)^2]}} = R_0 \frac{x(x_2-x_1)}{\sqrt{[(x_2^2-x^2)(x^2-x_1^2)]}} \end{aligned}\right\} \quad . \quad 11(\text{i})$$

$$\left.\begin{aligned} \sinh \frac{P}{2} &= -j\frac{1-x^2}{nx} = -j\frac{1-x^2}{x(x_2-x_1)} \\ \cosh P &= 1 - 2\left[\frac{1-x^2}{nx}\right]^2 = 1 - 2\left[\frac{1-x^2}{x(x_2-x_1)}\right]^2 \end{aligned}\right\} \quad . \quad . \quad 11(\text{ii})$$

When $0 < x < x_1$, $-\infty < \cosh P < -1$

$$A = \cosh^{-1}\left\{2\left[\frac{1-x^2}{nx}\right]^2 - 1\right\}$$

$$= 2\cosh^{-1}\frac{1-x^2}{nx}$$

$$B = -\pi$$

when $x_1 < x < x_2$, $-1 < \cosh P < 1$, and $\cosh P = -1$ when $x = x_1$ or $x_2$, and $\cosh P = 1$ when $x = 1$

$$A = 0$$

$$B = \cos^{-1}\left\{1 - 2\left[\frac{1-x^2}{nx}\right]^2\right\}$$

$$= -2\sin^{-1}\frac{1-x^2}{nx}$$

when $x_2 < x < \infty$, $-1 > \cosh P > -\infty$

$$A = \cosh^{-1}\left\{2\left[\frac{1-x^2}{nx}\right]^2 - 1\right\}$$

$$= 2\cosh^{-1}\frac{1-x^2}{nx}$$

$$B = \pi \quad . \quad 11(\text{iv})$$

The middle relationship shows more clearly that we are dealing with two confluent pass-bands, one for which $-1 < \cosh P < 1$ (i.e. $x_1 < x < 1$) and the other for which $1 > \cosh P > 1$ (i.e. $1 < x < x_2$).

**11.1. $m$-Derived Half-Sections.** Series- and shunt-derived half-sections are obtained by means of Section 6, and are shown in Fig. 17($a$) and ($c$) respectively. 6(iii), (i) and (ii) then give

$$\left.\begin{aligned} Z_{01m} &= R_0\frac{nx\sqrt{[n^2x^2-(1-x^2)^2]}}{n^2x^2-(1-m^2)(1-x^2)^2} \\ &= R_0\frac{x(x_{2\infty}-x_{1\infty})^2\sqrt{[x^2(x_2-x_1)^2-(1-x^2)^2]}}{(x_2-x_1)(x^2-x_{1\infty}{}^2)(x_{2\infty}{}^2-x^2)} \\ Z_{02m} &= R_0\frac{n^2x^2-(1-m^2)(1-x^2)^2}{nx\sqrt{[n^2x^2-(1-x^2)^2]}} \\ &= R_0\frac{(x_2-x_1)(x^2-x_{1\infty}{}^2)(x_{2\infty}{}^2-x^2)}{x(x_{2\infty}-x_{1\infty})^2\sqrt{[x^2(x_2-x_1)^2-(1-x^2)^2]}} \end{aligned}\right\} \quad . \quad 11(\text{v})$$

$$\sinh\frac{P_m}{2} = \frac{-jm(1-x^2)}{\sqrt{[n^2x^2-(1-m^2)(1-x^2)^2]}} \quad . \quad 11(\text{vi})$$

where

$$\left.\begin{aligned} m &= \frac{\sqrt{[(x_1{}^2-x_{1\infty}{}^2)(x_2{}^2-x_{1\infty}{}^2)]}}{1-x_{1\infty}{}^2} \\ x_{1\infty}x_{2\infty} &= 1 \end{aligned}\right\} \quad . \quad 11(\text{vii})$$

$x_{1\infty}$ and $x_{2\infty}$ are points of peak attenuation and are symmetrically placed about $x = 1$.

$$\left.\begin{aligned} &\text{When } 0 < x < x_{1\infty},\ \frac{-m}{\sqrt{(1-m^2)}} > \cosh P_m > -\infty \\ &A = 2\sinh^{-1}\frac{m(1-x^2)}{\sqrt{[(1-m^2)(1-x^2)^2-n^2x^2]}},\ B = 0 \\ &\text{when } x_{1\infty} < x < x_1,\ -\infty < \cosh P_m < -1 \\ &A = 2\cosh^{-1}\frac{m(1-x^2)}{\sqrt{[n^2x^2-(1-m^2)(1-x^2)^2]}},\ B = -\pi \\ &\text{when } x_1 < x < x_2,\ -1 < \cosh P_m < 1 \\ &A = 0,\ B = -2\sin^{-1}\frac{m(1-x^2)}{\sqrt{[n^2x^2-(1-m^2)(1-x^2)^2]}} \\ &\text{when } x_2 < x < x_{2\infty},\ -1 > \cosh P > -\infty \\ &A = 2\cosh^{-1}\frac{m(x^2-1)}{\sqrt{[n^2x^2-(1-m^2)(1-x^2)^2]}},\ B = \pi \\ &\text{when } x_{2\infty} < x < \infty,\ -\infty < \cosh P_m < \frac{-m'}{\sqrt{(1-m^2)}} \\ &A = 2\sinh^{-1}\frac{m(x^2-1)}{\sqrt{[(1-m^2)(1-x^2)^2-n^2x^2]}},\ B = 0 \end{aligned}\right\} \quad . \quad 11(\text{viii})$$

The attenuation coefficient of the $m$-derived half-section is symmetrical about the mid-band frequency, the phase coefficient at frequencies placed symmetrically about the mid-band frequency being of equal magnitude but of opposite sign.

**11.2. $m_1m_2$-Derived Half-Sections.** With the band-pass half-section $m$ may be a function of frequency (and therefore of $x$), instead of being a constant as has been the case in all derived half-sections which have preceded this paragraph. For a realizable $m$-derived half-section, $m$ $(= F(x))$ must be chosen so that the arms of the half-section are made up of physically realizable components. Such is the case if we write

$$m = \frac{m_2 - m_1x^2}{1 - x^2}.$$

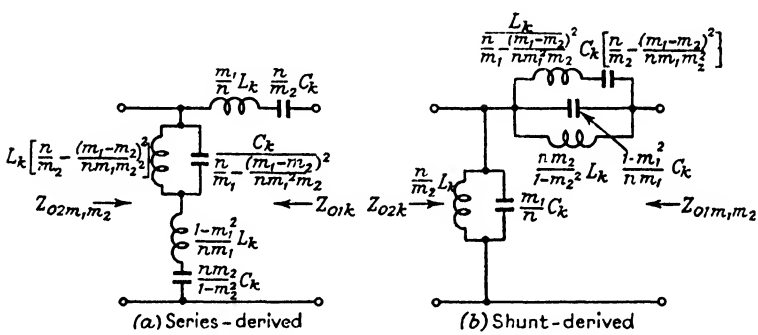


FIG. 18.—$m_1m_2$-derived Band-pass Half-sections.

Putting $m_1 = m_2$ in this relationship makes $m = m_1 = m_2$ and gives the $m$-derivation which we have discussed in 11(v) to 11(viii).

The mid-series and mid-shunt $m_1m_2$-derived half-sections are shown in Figs. 18($a$) and ($b$).

Substituting for $m$ in (v), (vi) and (vii) we get

$$\left.\begin{aligned} Z_{01m_1m_2} &= R_0\frac{nx\sqrt{[n^2x^2 - (1 - x^2)^2]}}{n^2x^2 - (1 - x^2)^2 + (m_2 - m_1x^2)^2} \\ Z_{02m_1m_2} &= R_0\frac{n^2x^2 - (1 - x^2)^2 + (m_2 - m_1x^2)^2}{nx\sqrt{[n^2x^2 - (1 - x^2)^2]}} \end{aligned}\right\} \quad . \quad 11(\text{ix})$$

$$\sinh\frac{P_{m_1m_2}}{2} = \frac{-j(m_2 - m_1x^2)}{\sqrt{[n^2x^2 - (1 - x^2)^2 + (m_2 - m_1x^2)^2]}} \quad . \quad 11(\text{x})$$

With this half-section $x_{1\infty}$ and $x_{2\infty}$, the values of $x$ for which $P_{m_1m_2}$ is infinite, are given by

$$\left.\begin{aligned}
x_{1\infty}^2+x_{2\infty}^2 &= \frac{n^2+2-2m_1m_2}{1-m_1^2}\\
x_{1\infty}^2x_{2\infty}^2 &= \frac{1-m_2^2}{1-m_1^2}\\
\text{or if } x_{1\infty} \text{ and } x_{2\infty} &\text{ are given}\\
m_1 &= \frac{\dfrac{g}{x_{2\infty}^2}+h}{1-\dfrac{x_{1\infty}^2}{x_{2\infty}^2}}\\
m_2 &= \frac{g+hx_{1\infty}^2}{1-\dfrac{x_{1\infty}^2}{x_{2\infty}^2}}\\
g &= \sqrt{[(1-x_{1\infty}^2/x_1^2)(1-x_{1\infty}^2/x_2^2)]}\\
h &= \sqrt{[(1-x_1^2/x_{2\infty}^2)(1-x_2^2/x_{2\infty}^2)]}
\end{aligned}\right\} \quad . \quad 11(\text{xi})$$

$x_{1\infty}$ and $x_{2\infty}$ are independent and not symmetrically placed about $x = 1$ as was the case with the $m$-derived half-sections.

By giving $x_{1\infty}$ and $x_{2\infty}$ particular values the number of elements in the $m_1m_2$-derived half-section can be reduced from 6 to 5, 4 and 3, the characteristics becoming more and more restricted as the number of elements is reduced.*

**11.2.1. 5-Element Half-Sections.** There are two types of 5-element half-sections. One has $x_{1\infty} = 0$, $x_2 < x_{2\infty} < \infty$ and the other has $0 < x_{1\infty} < x_1$, $x_{2\infty} = \infty$.

When $x_{1\infty} = 0$, $x_2 < x_{2\infty} < \infty$; $m_2 = 1$ and

$$\sinh\frac{P}{2} = \frac{j(m_1x^2-1)}{\sqrt{[x^4(1-m_1^2)-x^2(n^2+2-2m_1)]}} \quad . \quad 11(\text{xii})$$

and when $0 < x_{1\infty} < x_1$, $x_{2\infty} = \infty$; $m_1 = 1$ and

$$\sinh\frac{P}{2} = \frac{j(x^2-m_2)}{\sqrt{[(1-m_2^2)-x^2(n^2+2-2m_2)]}} \quad . \quad 11(\text{xiii})$$

**11.2.2. 4-Element Half-Sections.** There are three 4-element half-sections. One has $x_{1\infty} = 0$, $x_{2\infty} = \infty$, $m_1 = m_2 = 1$ and is the constant-$k$ half-section. Of the two other types, one has

* Zobel developed the $m_1m_2$ band-pass half-section from a consideration of a low- and band-pass half-section, and the parameters $a$, $b$, $c$, $d$, $g$, $h$, with others, are used for that type of filter.

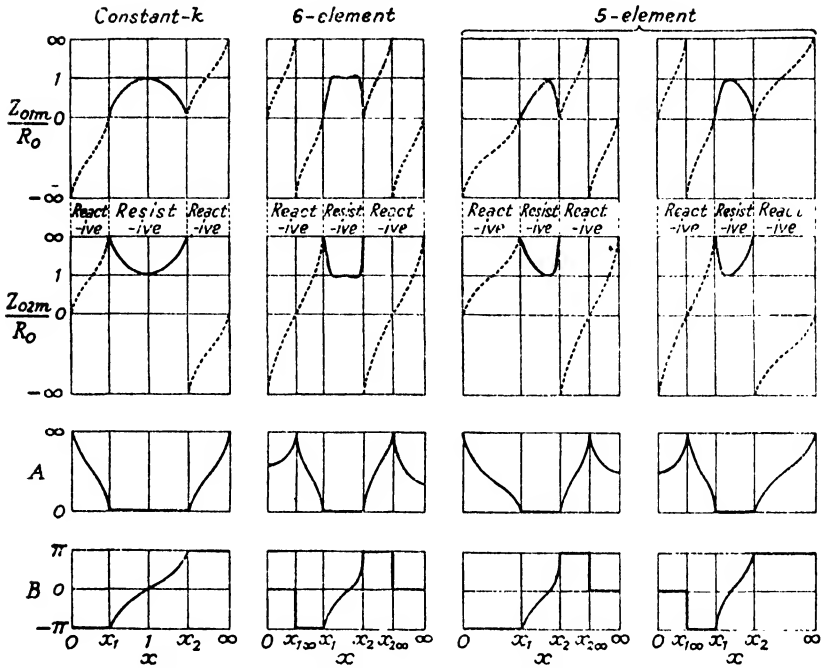


FIG. 19.—Characteristics of Band-pass Filters. Full Sections.

$0 < x_{1\infty} < x_1$, $x_{2\infty} = -x_2$,* for which

$$\left.\begin{aligned} m_1 &= \sqrt{\left[\frac{x_1^2 - x_{1\infty}^2}{x_2^2 - x_{1\infty}^2}\right]} \\ m_2 &= \frac{x_2}{x_1} m_1 \\ \sinh\frac{P}{2} &= jm_1\sqrt{\left[\frac{x^2 - x_2/x_1}{x^2(1 - m_1^2) - (x_1/x_2 - m_1^2 x_2/x_1)}\right]} \\ &= \sqrt{\left[\frac{(x_1^2 - x_{1\infty}^2)(x^2 - x_2^2)}{(x_2^2 - x_1^2)(x^2 - x_{1\infty}^2)}\right]} \end{aligned}\right\} \quad . \quad 11(\text{xiv})$$

and the other has $x_{1\infty} = -x_1$, $x_2 < x_{2\infty} < \infty$, for which

$$\left.\begin{aligned} m_1 &= \sqrt{\left[\frac{x_{2\infty}^2 - x_2^2}{x_{2\infty}^2 - x_1^2}\right]} \\ m_2 &= \frac{x_1}{x_2} m_1 \\ \sinh\frac{P}{2} &= jm_1\sqrt{\left[\frac{x^2 - x_1/x_2}{x^2(1 - m_1^2) - (x_2/x_1 - m_1^2 x_1/x_2)}\right]} \\ &= \sqrt{\left[\frac{(x_{2\infty}^2 - x_2^2)(x^2 - x_1^2)}{(x_2^2 - x_1^2)(x^2 - x_{2\infty}^2)}\right]} \end{aligned}\right\} \quad . \quad 11(\text{xv})$$

* Zobel assumed $x_{2\infty} = +x_2$, but Starr (*Electric Circuits and Wave Filters*) suggested that $x_{2\infty} = -x_2$ is a more reasonable assumption to make.

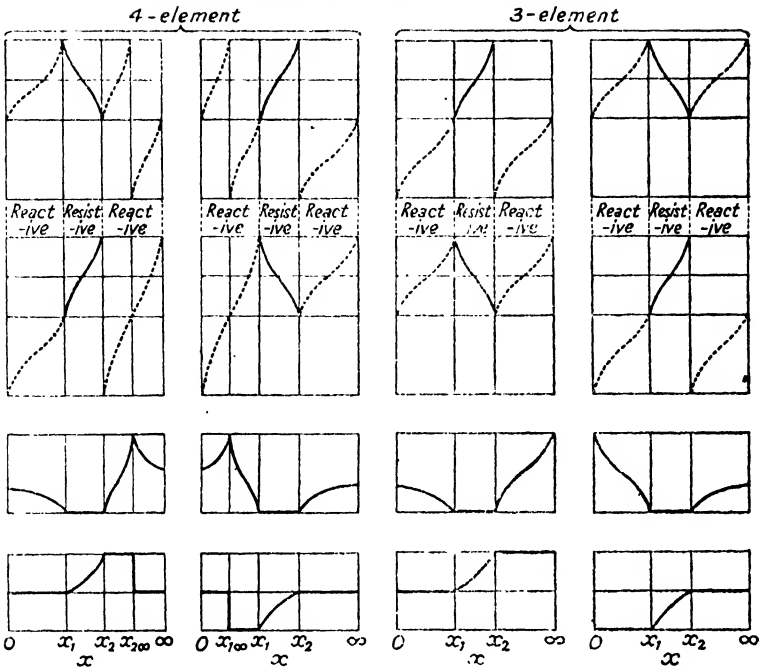


(See Fig. 20 for Component Values.)

**11.2.3. 3-Element Half-Sections.** There are two types of 3-element half-sections. One has $x_{1\infty} = 0$, $x_{2\infty} = -x_2$, for which

$$\left.\begin{aligned} m_1 &= \frac{x_1}{x_2} \\ m_2 &= 1 \\ \sinh\frac{P}{2} &= j\frac{x_1}{x}\sqrt{\left[\frac{x_2^2 - x^2}{x_2^2 - x_1^2}\right]} \end{aligned}\right\} \quad . \quad . \quad 11(\text{xvi})$$

and the other has $x_{1\infty} = -x_1$, $x_{2\infty} = \infty$, for which

$$\left.\begin{aligned} m_1 &= 1 \\ m_2 &= \frac{x_1}{x_2} \\ \sinh\frac{P}{2} &= \sqrt{\left[\frac{x_1^2 - x^2}{x_2^2 - x_1^2}\right]} \end{aligned}\right\} \quad . \quad . \quad 11(\text{xvii})$$

Fig. 19 shows the form taken by the image impedances and the image transfer coefficients of all these band-pass half-sections, and Fig. 20 shows the actual form of the half-sections. It will be noticed that the form of the arms containing four elements does not apparently agree with those shown in Fig. 18. They are, however, equivalent, and those shown in Fig. 20 have the advantage

over those shown in Fig. 18, that the resonant frequencies of the series or parallel resonant combinations are the frequencies of peak attenuation of the half-section. These frequencies of peak attenuation are indicated in Fig. 20 by the symbols $f_{1\infty}$ and $f_{2\infty}$ adjacent to the resonant combinations giving rise to the attenuation peaks. The use of the form of construction shown in Fig. 20 enables the adjustment of the components to be carried out as described in 18.4.3.

### 11.3. Relationships between Band-pass Half-Sections.

If in the expression for $\sinh \frac{P_{m_1 m_2}}{2}$ (11(x)), we substitute for $m_1$ and $m_2$ from 11(xi), $P_{m_1 m_2}$ may be determined by means of the relationship

$$\sinh^{-1}\theta = \log_e \{\theta + \sqrt{(\theta^2+1)}\} \quad . \quad . \quad 1(\text{xxx})$$

If, in a similar way, we determine $P$ from 11(xiv) and 11(xv) giving $x_{1\infty}$, $x_1$, $x_2$ and $x_{2\infty}$ in these last two expressions the same values as we used in 11(x) and 11(xi), it can be shown that the image transfer coefficient of a 6-element band-pass half-section is equal to the sum of the image transfer coefficients of two 4-element band-pass half-sections having the same values of $x_{1\infty}$, $x_1$, $x_2$ and $x_{2\infty}$.

We may describe the type of a band-pass half-section by a figure denoting the number of elements, followed by symbols giving the values of $x$ for which $P$ is infinite. The letter $P$ outside brackets enclosing these symbols refers to the image transfer coefficient of that section.

From the above it can be shown that

$$\begin{aligned}
P(6, x_{1\infty}, x_{2\infty}) &= P(4, x_{1\infty}) + P(4, x_{2\infty}) \\
P(5, 0, x_{2\infty}) &= P(3, 0) + P(4, x_{2\infty}) \\
P(5, x_{1\infty}, \infty) &= P(4, x_{1\infty}) + P(3, \infty) \\
P(4, 0, \infty) &= P(3, 0) + P(3, \infty) \\
P(3, 0) &= P(4, 0) \\
P(3, \infty) &= P(4, \infty)
\end{aligned}$$

and if $x_{1\infty}x_{2\infty} = 1$, $P(4, x_{2\infty})$ with $\frac{1}{x}$ written for $x$ is conjugate to $P(4, x_{1\infty})$.

These relationships are of importance in filter design as they enable us to design a filter on the basis of 4-element half-sections with their simple expressions for the calculation of $P$, and to combine these 4-element half-sections into more complicated structures with a reduction in the number of elements.

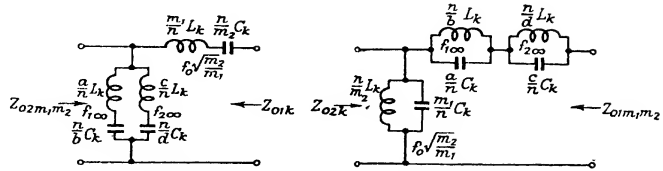


$$g = \sqrt{[(x_1^2 - x_{1\infty}^2)(x_2^2 - x_{1\infty}^2)]},$$

$$m_1 = \frac{g/x_{2\infty}^2 + h}{1 - x_{1\infty}^2/x_{2\infty}^2}, \qquad m_2 = \frac{g + hx_{1\infty}^2}{1 - x_{1\infty}^2/x_{2\infty}^2}, \qquad h = \sqrt{[(x_1^2 - 1/x_{2\infty}^2)(x_2^2 - 1/x_{2\infty}^2)]}, \qquad a = \frac{(1 - m_1^2)(x_{2\infty}^2 - x_{1\infty}^2)}{g}$$

| Type | $g$ | $h$ | $m_1$ | $m_2$ | $a$ | $b$ | $c$ | $d$ |
|---|---|---|---|---|---|---|---|---|
| 6, $x_{1\infty}$, $x_{2\infty}$ | $g$ | $h$ | $m_1$ | $m_2$ | $a$ | $ax_{1\infty}^2$ | $d/x_{2\infty}^2$ | $ag/h$ |
| 5, 0, $x_{2\infty}$ | 1 | $h$ | $\frac{1}{x_{2\infty}^2} + h$ | 1 | $x_{2\infty}^2(1 - m_1^2)$ | 0 | $d/x_{2\infty}^2$ | $a/h$ |
| 5, $x_{1\infty}$, $\infty$ | $g$ | 1 | 1 | $x_{1\infty}^2 + g$ | $d/g$ | $ax_{1\infty}^2$ | 0 | $\frac{1 - m_2^2}{x_{1\infty}^2}$ |
| 4, $x_{2\infty}$ | 0 | $h$ | $m_2x_2^2$ | $\sqrt{\left[\frac{x_1^2 - \frac{1}{x_{2\infty}^2}}{x_2^2 - \frac{1}{x_{2\infty}^2}}\right]}$ | $\infty$ | $\infty$ | $\frac{1 - m_1^2}{m_1}$ | $\left[= \frac{cx_{2\infty}^2}{\frac{1 - m_2^2}{m_2}}\right]$ |
| 4, $x_{1\infty}$ | $g$ | 0 | $\sqrt{\left[\frac{x_1^2 - x_{1\infty}^2}{x_2^2 - x_{1\infty}^2}\right]}$ | $m_1x_2^2$ | $\frac{1 - m_1^2}{m_1}$ | $\left[= \frac{ax_{1\infty}^2}{\frac{1 - m_2^2}{m_2}}\right]$ | $\infty$ | $\infty$ |
| 3, $\infty$ | 0 | 1 | 1 | $x_1^2$ | $\infty$ | $\infty$ | 0 | $x_2^2 - x_1^2$ |
| 3, 0 | 1 | 0 | $x_1^2$ | 1 | $x_2^2 - x_1^2$ | 0 | $\infty$ | $\infty$ |

FIG. 20.—Band-pass Filter Half-sections.

[Facing p. 60.

Section 14 shows the application of templates to the determination of $A$ and $B$ for band-pass filter sections.

**11.4. Impedance Transformation.** The two networks shown in Fig. 21($a$) and 21($b$) can be shown to be equivalent to those shown in Fig. 21($c$) and 21($d$) respectively by equating their open- and short-circuited impedances. The transformers shown in Fig. 21($a$) and 21($b$) are ideal transformers of impedance ratio $1:\phi^2$. An ideal transformer of impedance ratio $1:\phi^2$ has the properties of showing an impedance of $\phi^2 Z$ at the $\phi^2$-terminals when the 1-terminals are closed through an impedance $Z$, of showing a p.d. of $\phi V$ at the $\phi^2$-terminals when the 1-terminals have a p.d. of $V$ applied to them, and of causing a current of $\frac{I}{\phi}$ to flow through a circuit connected to the $\phi^2$-terminals when a current $I$ flows into the 1-terminals.

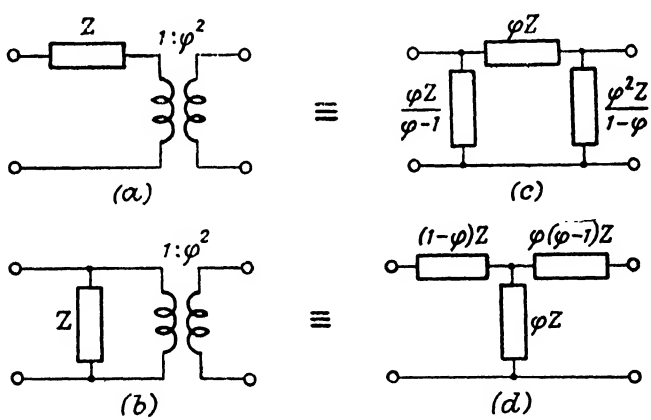


FIG. 21.—Impedance Transformation. Equivalent Circuits.

It will be noticed that one of the elements in each of the equivalent circuits of Fig. 21 ($c$) and ($d$) will be a negative quantity times the impedance $Z$. Although this is possible at a single frequency $\left(\text{e.g., } j\omega L \text{ and } \frac{1}{j\omega C} \text{ are of opposite sign and of equal magnitude when } \omega^2 = \frac{1}{LC}\right)$ it is not possible to make such an impedance which will hold over an extended frequency range. Thus we can use the equivalent circuit only when the "negative" impedance is placed in series or parallel with an impedance of the same kind.

An example of impedance transformation is shown in Fig. 22 (*a*) to (*d*). It is obvious that $L_1$ could have been used instead of $C_1$ in this transformation.

The impedance ratio of the transformation is limited by the condition that there is no negative inductance or capacitance in

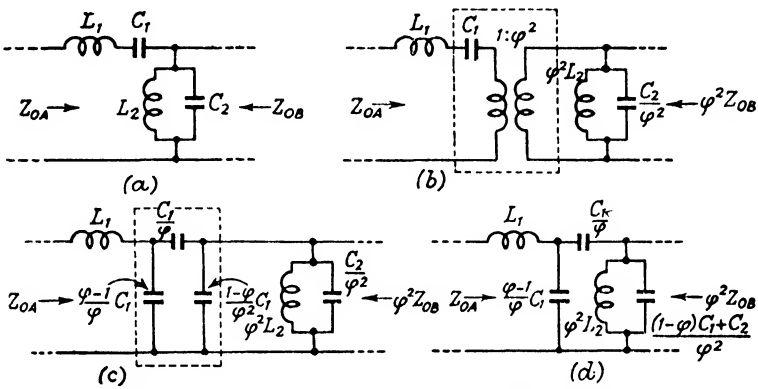


FIG. 22.—Impedance Transformation. Series Condenser.

the transformed ratio. The limit occurs when the negative component is of the same magnitude as the positive component with which it is associated.

From an analysis of the possible series and shunt-elements of low-pass, high-pass, band-pass and band-stop half-sections, it will be seen that only the band-pass structure is suitable for impedance transformation.

## 12. BAND-STOP FILTER HALF-SECTIONS.

If we interchange the series and shunt arms of the constant-$k$ band-pass half-section of Section 11, Fig. 17(*b*), we obtain the half-section shown in Fig. 23(*b*). Using the same symbols as were used in Section 11,

$$Z_1 = jR_0 \frac{n}{\left(\frac{1}{x} - x\right)}$$

$$Z_2 = jR_0 \frac{x - \frac{1}{x}}{n}$$

and from 4(i) and 4(ii)

$$\left.\begin{aligned} Z_{01k} &= R_0\frac{\sqrt{[1-x^2(n^2+2)+x^4]}}{1-x^2} \\ Z_{02k} &= R_0\frac{1-x^2}{\sqrt{[1-x^2(n^2+2)+x^4]}} \end{aligned}\right\} \quad . \quad 12(ia)$$

$$\left.\begin{aligned} \sinh\frac{P}{2} &= j\frac{nx}{1-x^2} \\ \cosh P &= 1-2\left[\frac{nx}{1-x^2}\right]^2 \end{aligned}\right\} \quad . \quad . \quad . \quad 12(iia)$$

Cut-off frequencies are given by

$$-\left[\frac{1-x^2}{nx}\right]^2 = 0 \text{ or } -1$$

i.e.

$$x = 1 \text{ or } \frac{\sqrt{(n^2+4)}\pm n}{2}.$$

Write

$$\left.\begin{aligned} x_1 &= \frac{\sqrt{(n^2+4)}-n}{2} \\ x_2 &= \frac{\sqrt{(n^2+4)}+n}{2} \end{aligned}\right\} \quad . \quad . \quad . \quad 12(iii)$$

then

$$\left.\begin{aligned} x_1x_2 &= 1 \\ n &= x_2 - x_1 \end{aligned}\right\}$$

At $x = 1$ the series arm has an infinite impedance and the shunt arm a zero impedance. $x = 1$ thus lies in an attenuating-band. The half-section has two pass-bands, one extending from 0 to $x_1$, and the other from $x_2$ to $\infty$, separated by an attenuating-band. The frequency corresponding to $x = 1$ is known as the mid (-attenuating) band frequency.

Substituting for $n$ in 12(i$a$) and 12(ii$a$) we get

$$\left.\begin{aligned} Z_{01k} &= R_0\frac{\sqrt{[(x^2-x_1^2)(x^2-x_2^2)]}}{1-x^2} \\ Z_{02k} &= R_0\frac{1-x^2}{\sqrt{[(x^2-x_1^2)(x^2-x_2^2)]}} \end{aligned}\right\} \quad . \quad . \quad 12(i)$$

$$\left.\begin{aligned} \sinh\frac{P}{2} &= j\frac{x(x_2-x_1)}{1-x^2} \\ \cosh P &= 1-2\left[\frac{x(x_2-x_1)}{1-x^2}\right]^2 \end{aligned}\right\} \quad . \quad . \quad . \quad 12(ii)$$

When $0 < x < x_1$, $0 > \cosh P > -1$

$$A = 0$$

$$B = 2 \sin^{-1} \frac{x(x_2 - x_1)}{1 - x^2}$$

when $x_1 < x < 1$, $-1 > \cosh P > -\infty$

$$A = 2 \cosh^{-1} \frac{x(x_2 - x_1)}{1 - x^2}$$

$$B = \pi$$

when $x = 1$, $A = \infty$

when $1 < x < x_2$, $-\infty < \cosh P < -1$

$$A = 2 \cosh^{-1} \frac{x(x_2 - x_1)}{x^2 - 1}$$

$$B = -\pi$$

when $x_2 < x < \infty$, $-1 < \cosh P < 0$

$$A = 0$$

$$B = 2 \sin^{-1} \frac{x(x_2 - x_1)}{1 - x^2}$$

**12.1. *m*-Derived Half-Sections.** Series- and shunt-derived half-sections are obtained by means of Section 6 and are shown in Fig. 23 (*a*) and (*c*) respectively. 6(iii), (i) and (ii) then give

$$\left.\begin{aligned} Z_{01m} &= R_0 \frac{\sqrt{\left[1 - \left(\frac{nx}{1 - x^2}\right)^2\right]}}{\left\{1 - \left(\frac{nx}{1 - x^2}\right)^2 (1 - m^2)\right\}} \\ Z_{02m} &= R_0 \frac{\left\{1 - \left(\frac{nx}{1 - x^2}\right)^2 (1 - m^2)\right\}}{\sqrt{\left[1 - \left(\frac{nx}{1 - x^2}\right)^2\right]}} \end{aligned}\right\} \quad . \quad . \quad 12(\text{iv}a)$$

$$\sinh \frac{P_m}{2} = j \frac{mnx}{\sqrt{[(1 - x^2)^2 - n^2x^2(1 - m^2)]}} \quad . \quad . \quad 12(\text{v}a)$$

$$x_{1\infty} = \frac{\sqrt{[(1 - m^2)^2 n^2 + 4]} - n(1 - m^2)}{2}$$

$$x_{2\infty} = \frac{\sqrt{[(1 - m^2)^2 n^2 + 4]} + n(1 - m^2)}{2}$$

$$x_{1\infty} x_{2\infty} = 1$$

and

$$m = \sqrt{\left[1 - \frac{(x_{2\infty} - x_{1\infty})^2}{n^2}\right]}$$

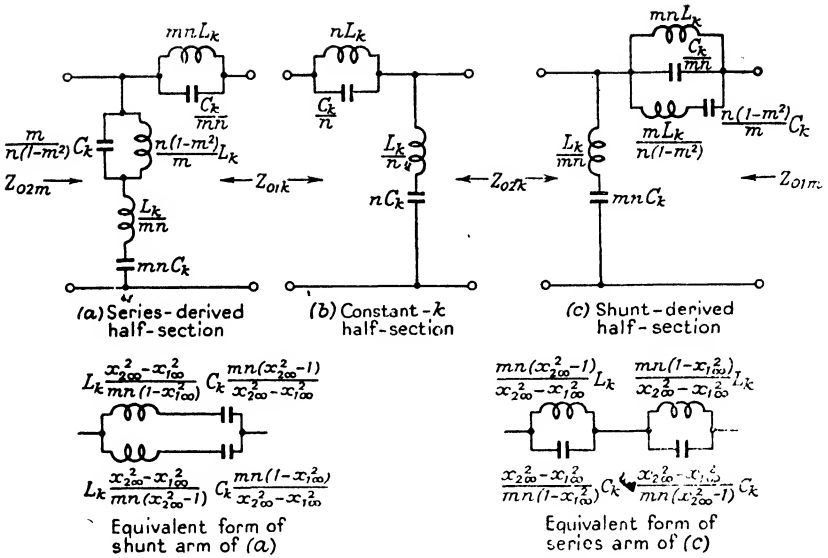


FIG. 23.—Band-stop Half-sections.

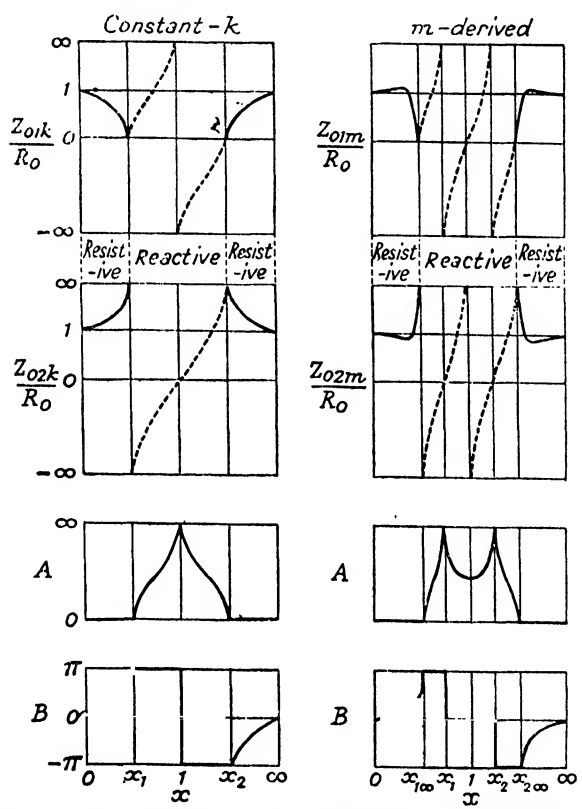


FIG. 24.—Band-stop Filter Characteristics. Full Sections.

On substituting for $m$ and $n$ we get

$$\left.\begin{aligned} Z_{01m} &= R_0\frac{(1-x^2)\sqrt{[(x^2-x_1^2)(x^2-x_2^2)]}}{(x^2-x_{1\infty}^2)(x^2-x_{2\infty}^2)} \\ Z_{02m} &= R_0\frac{(x^2-x_{1\infty}^2)(x^2-x_{2\infty}^2)}{(1-x^2)\sqrt{[(x^2-x_1^2)(x^2-x_2^2)]}} \end{aligned}\right\} \quad . \quad 12(\text{iv})$$

$$\sinh\frac{P_m}{2} = jx\sqrt{\left[\frac{(x_2^2+x_1^2)-(x_{2\infty}^2+x_{1\infty}^2)}{(x^2-x_{1\infty}^2)(x^2-x_{2\infty}^2)}\right]} \quad . \quad . \quad 12(\text{v})$$

Fig. 24 shows the form taken by the image impedances and the image transfer coefficients of band-stop half-sections.

Section 14 shows how the use of templates may be applied to the calculation of $A$ and $B$ for band-stop filter sections.

## 13. EFFECT OF DISSIPATION IN COMPONENTS OF A FILTER.

So far we have assumed that all components used in a filter network are pure reactances. As there are no perfect inductors or capacitors, this assumption does not hold in practice, and consequently $\frac{Z_1}{Z_2}$ is not wholly real as was assumed in Section 5. Hence $\cosh P$ will be complex and as

$$\cosh P = \cosh A \cos B + j \sinh A \sin B$$

the second term on the right-hand side of the equation will not be zero as was the case (5(ii)) when the elements were pure reactances. This means that there is no band of frequencies for which there is no attenuation, nor a band for which the phase-shift is an integral multiple of $\pi$. Fortunately the characteristics of a practical filter follow those of the ideal filter fairly closely, dissipation introducing only a second-order correction. We are thus able to base our design on ideal components, correcting our design characteristics where necessary.

If $\frac{Z_1}{Z_2}$ is complex, and equal to $U+jV$,

$$\cosh P = 1+2\frac{Z_1}{Z_2}. \quad . \quad . \quad . \quad 3(\text{iv})$$

$$= 1+2U+j2V$$

But $\cosh P = \cosh(A+jB)$ from 5(i)

$$= \cosh A \cos B + j \sinh A \sin B$$

and equating real parts and imaginary parts,

$$\cosh A \cos B = 1+2U, \quad \cos B = \frac{1+2U}{\cosh A}$$

$$\sinh A \sin B = 2V, \qquad \sin B = \frac{2V}{\sinh A}.$$

Now $\cos^2\theta + \sin^2\theta = 1$, whence

$$\frac{(1+2U)^2}{\cosh^2 A} + \frac{(2V)^2}{\sinh^2 A} = 1$$

or $$\sinh^2 A\,(1+2U)^2 + \cosh^2 A(2V)^2 = \cosh^2 A \sinh^2 A$$

and substituting $(1+\sinh^2 A)$ for $\cosh^2 A$, and rearranging terms,

$$\sinh^4 A - 4[U^2+V^2+U]\sinh^2 A - 4V^2 = 0$$

from which

$$\sinh^2 A = 2[(U^2+V^2+U) + \surd\{(U^2+V^2+U)^2+V^2\}]$$

the sign being chosen to make $\sinh^2 A$ positive. Thus

$$\left.\begin{aligned} &A = \sinh^{-1}\surd\{2[(U^2+V^2+U)+\surd\{(U^2+V^2+U)^2+V^2\}]\} \\ &\text{and similarly} \\ &B = \pm\sin^{-1}\surd\{2[\surd\{(U^2+V^2+U)^2+V^2\}-(U^2+V^2+U)]\}\end{aligned}\right\} \quad 13\text{(i)}$$

If $A$ is small, as for example in the pass-band of a filter, and in the attenuating-band near the cut-off frequencies, then we can use the approximation

$$\sinh A \doteqdot A$$

and the expression given in 13(i) for $A$ may be rewritten

$$A = \surd\{2[(U^2+V^2+U)+\surd\{(U^2+V^2+U)^2+V^2\}]\}. \quad . \quad 13\text{(ii)}$$

and $$A_{\text{db}} = 8{\cdot}7A.$$

We used the relationship

$$\sin B = \frac{2V}{\sinh A}$$

earlier in this section, and substituting $A$ for $\sinh A$ we get

$$B = \pm\sin^{-1}\frac{2V}{A}. \quad . \quad . \quad . \quad 13\text{(iii)}$$

where 13(ii) and 13(iii) apply to the pass-band and the adjoining portions of the attenuating-bands. We are generally interested in the effect of dissipation in and around the pass-band, and not very interested in the effects in the majority of the attenuating-bands. Thus equations 13(ii) and 13(iii) will be of use in calculating the effect of dissipation over the region in which we are interested.

Fig. 25 enables $A$ to be determined from $U$ and $V$ for the region in and about a transmitting band.

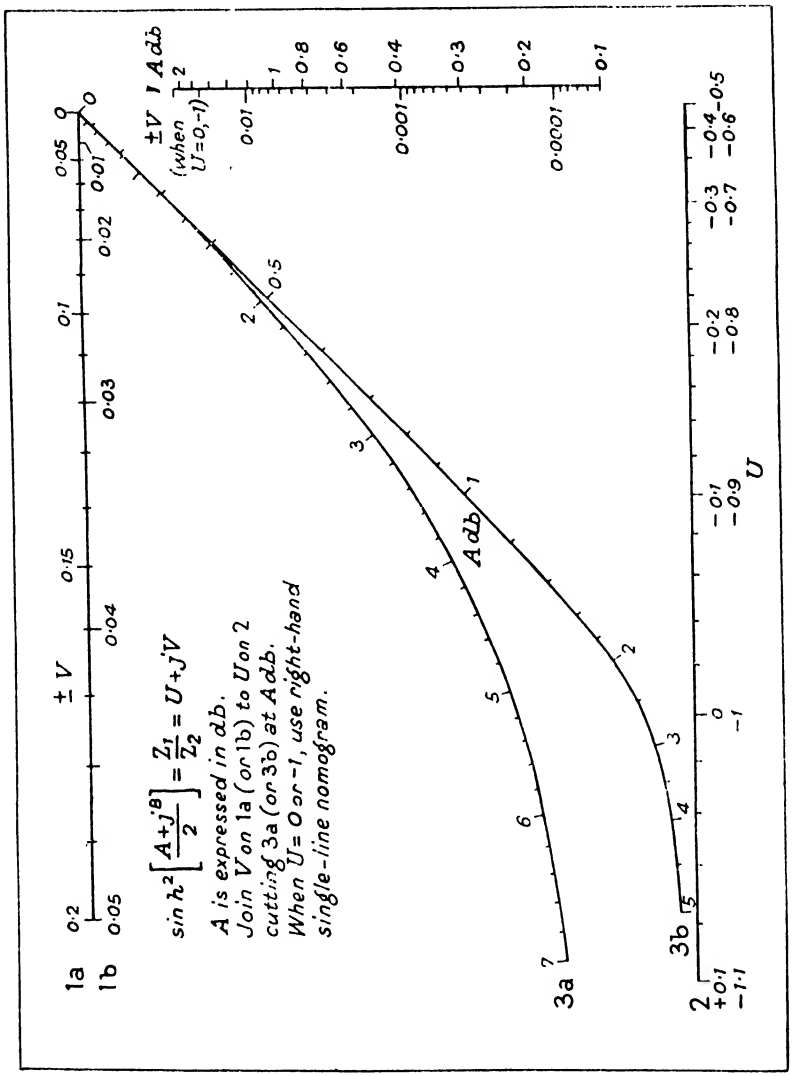


FIG. 25.—Nomogram for Calculating Image.
Transfer Attenuation Coefficient of Dissipative Filter in and around Pass-band.

For calculation we can go to the expression for $\sinh \frac{P}{2}$, which is equal to $\sqrt{\frac{Z_1}{Z_2}}$. As developed in all the work done so far, $\sinh \frac{P}{2}$ is expressed in terms of $x$, $x_{1\infty}$, $x_1$, $x_2$ and $x_{2\infty}$. $\sinh^2 \frac{P}{2} \left(= \frac{Z_1}{Z_2}\right)$ will be found to contain only even powers of these quantities, and in particular of $x$. It will be seen on examination of the

various half-sections, that $x^2$ occurs in an expression referring to an inductance and a capacitance, on eliminating the $\frac{1}{x}$ that occurs in the impedance of a capacitance. If the components are dissipative, we may write the impedance of an inductor as $jx(1-jd_L)L$ and that of a condenser as $\frac{1}{jx(1-jd_C)C}$, where $d_L$ and $d_C$ are the dissipation factors of the inductor and condenser respectively. It is assumed that all inductors have a dissipation factor $d_L$, and all condensers, $d_C$. Thus $x^2$ will now occur as $x^2(1-jd_L)(1-jd_C)$, and if $d_L$ and $d_C$ are so small that their squares may be neglected, this reduces to $x^2(1-jd)$, where $d = d_L + d_C$.

An alternative method of expressing the dissipation of a component is by means of its $Q$, and $Q = \frac{1}{d}$.

$$Q_L = \frac{\omega L}{R} = \frac{1}{d_L}, \quad Q_C = \frac{\omega C}{G} = \frac{1}{d_C}$$

where $R$ is the series resistance at a frequency $\frac{\omega}{2\pi}$ of the inductor, of inductance $L$, and $G$ is the parallel leakance at a frequency $\frac{\omega}{2\pi}$ of the capacitor of capacitance $C$.

Take for example the $m$-derived low-pass filter for which

$$\sinh\frac{P_m}{2} = jx\sqrt{\left[\frac{x_{2\infty}^2 - 1}{x_{2\infty}^2 - x^2}\right]} \quad . \quad . \quad 9(\text{viii})$$

Then
$$\frac{Z_1}{Z_2} = \sinh^2\frac{P_m}{2} = \frac{-x^2(x_{2\infty}^2 - 1)}{x_{2\infty}^2 - x^2}.$$

Allowing for dissipation this becomes

$$\frac{Z_1}{Z_2} = \frac{-x^2(1-jd)(x_{2\infty}^2 - 1)}{x_{2\infty}^2 - x^2(1-jd)}$$

which, if we are only concerned with the pass-band, is approximately given by

$$\frac{Z_1}{Z_2} \doteqdot \frac{-x^2(x_{2\infty}^2 - 1)}{x_{2\infty}^2 - x^2} + j\frac{x^2(x_{2\infty}^2 - 1)x_{2\infty}^2}{(x_{2\infty}^2 - x^2)^2}.$$

In the attenuating-band the effect of dissipation is most serious at the peak of attenuation, i.e. $x = x_{2\infty}$, at which point

$$\begin{aligned}\frac{Z_1}{Z_2} &= \frac{-x_{2\infty}^2(1-jd)(x_{2\infty}^2 - 1)}{x_{2\infty}^2 jd} \\ &= -(x_{2\infty}^2 - 1) + j\frac{1}{d}(x_{2\infty}^2 - 1) \\ &= U + jV.\end{aligned}$$

## Table of Values of $\frac{Z_1}{Z_2}(=U+jV)$ for some Filter Sections $\left(d=d_L+d_C=\frac{1}{Q_L}+\frac{1}{Q_C}\right)$

| | Low-pass | | High-pass | | 4-element Band-pass ($x_{1\infty}$) |
|---|---|---|---|---|---|
| | $U$ | $V$ | $U$ | $V$ | $U$ |
| In and around pass-band | $\frac{-x^2(x_{2\infty}^2-1)}{(x_{2\infty}^2-x^2)}$ | $\frac{-dx_{2\infty}^2U}{(x_{2\infty}^2-x^2)}$ | $\frac{-(1-x_{1\infty}^2)}{(x^2-x_{1\infty}^2)}$ | $\frac{-dx^2U}{(x^2-x_{1\infty}^2)}$ | $\frac{-(x_1^2-x_{1\infty}^2)(x_2^2-x^2)}{(x_2^2-x_1^2)(x^2-x_{1\infty}^2)}$ |
| At cut-off . . . | $-1$ | $\frac{d}{\left(1-\frac{1}{x_{2\infty}^2}\right)}$ | $-1$ | $\frac{d}{(1-x_{1\infty}^2)}$ | $x_1$ $-1$<br>$x_2$ $0$ |
| At $x_\infty$ . . . . . | $-(x_{2\infty}^2-1)$ | $\frac{(x_{2\infty}^2-1)}{d}$ | $0$ | $\frac{\left(\frac{1}{x_{1\infty}^2}-1\right)}{d}$ | $\frac{(x_1^2-x_{1\infty}^2)}{(x_2^2-x_1^2)}$ |

| | 4-element Band-pass ($x_{1\infty}$) | 4-element Band-pass ($x_{2\infty}$) | |
|---|---|---|---|
| | $V$ | $U$ | $V$ |
| In and around pass-band | $\frac{dx^2(x_1^2-x_{1\infty}^2)(x_2^2-x_{1\infty}^2)}{(x_2^2-x_1^2)(x^2-x_{1\infty}^2)^2}$ | $\frac{-(x_{2\infty}^2-x_2^2)(x^2-x_1^2)}{(x_2^2-x_1^2)(x_{2\infty}^2-x^2)}$ | $\frac{dx^2(x_{2\infty}^2-x_1^2)(x_{2\infty}^2-x_2^2)}{(x^2-x_1^2)(x_{2\infty}^2-x^2)^2}$ |
| At cut-off . . . | $\frac{dx_1^2(x_2^2-x_{1\infty}^2)}{(x_2^2-x_1^2)(x_1^2-x_{1\infty}^2)}$ | $x_1$ $0$ | $\frac{dx_1^2(x_{2\infty}^2-x_2^2)}{(x_2^2-x_1^2)(x_{2\infty}^2-x_2^2)}$ |
| | $\frac{dx_2^2(x_1^2-x_{1\infty}^2)}{(x_2^2-x_1^2)(x_2^2-x_{1\infty}^2)}$ | $x_2$ $-1$ | $\frac{dx_2^2(x_{2\infty}^2-x_1^2)}{(x_2^2-x_1^2)(x_{2\infty}^2-x_2^2)}$ |
| At $x_\infty$ . . . . . | $\frac{(x_1^2-x_{1\infty}^2)(x_2^2-x_{1\infty}^2)}{dx_{1\infty}^2(x_2^2-x_1^2)}$ | $\frac{(x_{2\infty}^2-x_2^2)}{(x_2^2-x_1^2)}$ | $\frac{(x_{2\infty}^2-x_2^2)(x_{2\infty}^2-x_1^2)}{dx_{2\infty}^2(x_2^2-x_1^2)}$ |

NOTE.—At $x_\infty$, $V >> U$, and $A_{db} \doteq 8{\cdot}7 \sinh^{-1} 2|V|$.

For values of $U$ and $V$ in and around the pass-band, use Fig. 26.

The image transfer coefficient of a 6-element band-pass section is equal to the sum of the image transfer coefficients of the two 4-element band-pass sections from which it may be constructed.

The table on page 70 gives the expression for $U+jV$ for low-pass, high-pass and the two four-element types of band-pass filter constructions. The expressions apply to the pass-band and its adjacent regions, and particular values of the expression apply to the cut-off and peak-attenuation frequencies.

Another method is available which may be applied to a complete filter, for which we have determined the non-dissipative image phase-shift coefficient.

It can be shown (e.g. Guillemin, *Communication Networks*, Vol. II, p. 445) that

$$A_{\text{db}} \doteqdot 4{\cdot}35\omega(d_L+d_C)\frac{\partial B_0}{\partial \omega} \quad . \quad . \quad . \quad 13(\text{iv})$$

where $B_0$ is equal to the image transfer phase-shift coefficient of the non-dissipative network, and $A_{\text{db}}$ is the image transfer attenuation-coefficient (in db) of the network when the inductors have dissipation factors of $d_L$, and the capacitors have dissipation factors of $d_C$.

Assuming that $d_L$ and $d_C$ are inversely proportional to $\omega$, it will be seen that $A$ is proportional to $\frac{\partial B_0}{\partial \omega}$. If $\frac{\partial B_0}{\partial \omega}$ is constant over the pass-band, the dissipation of the elements will add a constant attenuation in the pass-band of the filter. Bode has developed a filter theory based on keeping $\frac{\partial B_0}{\partial \omega}$ constant through the pass-bands of the filters.

The expression 13(iv) enables us to calculate the attenuation coefficient in the pass-band of a complete filter to a fair degree of accuracy providing the calculation is not extended to a cut-off frequency, at which point $B_0$ is discontinuous.

## 14. CALCULATION OF IMAGE ATTENUATION AND PHASE-SHIFT COEFFICIENTS, DISSIPATION LOSS AND INSERTION LOSS BY THE HELP OF TEMPLATES.

The work in the design of a particular filter is simplified by the possibility of using templates, first suggested by T. Laurent (*Ericsson Technics*, 1937, No. 4) and extended by E. Rumpelt (*T.F.T.*, Vol. 31, No. 8., Aug. 1942, pp. 203–10) who used Laurent's templates and frequency transformations. Very similar methods, involving frequency transformation and standard curves of the shape used in this section, have been in use in the P.O. Engineering * Department for some years.

**14.1. Templates for Image Attenuation and Phase-Shift Coefficients.** If a template is to be used to draw the curve of any function, certain limitations must be recognized. A template is capable only of translation and rotation and it is thus only possible to use a template to draw the curve of a function of the sum of, or difference between, two quantities.

Consider the image transfer coefficient of a filter section. For a given pass-band, the only variables are $x$ and $x_\infty$, since the cut-off values $x_1$ and $x_2$ are fixed.

Thus if it is possible to express the image transfer coefficient, $P$, as

$$P = F\{f(x) \pm f(x_\infty)\} \qquad . \quad . \quad . \quad 14(i)$$

a template can be used to draw the curve of $P$ against a linear scale of $f(x)$ instead of against a linear scale of $x$ as is usual.

It can be shown that

$$P = 2 \coth^{-1} c\sqrt{X}$$

where $c$ is a constant and $X$ is a function of $x$, is a suitable form for the use of a template.

For when $x$ is equal to $x_\infty$, $X$ is equal to $X_\infty$ and $P$ is infinite, from which it follows that $c\sqrt{X_\infty}$ is equal to one.†

* E.g. *P.O.E.E.J.*, Vol. 31, p. 259, Jan. 1939; Ibid., Vol. 35, p. 5, Apr. 1942.

† Since $\coth \infty = 1$.

Thus $$c = \frac{1}{\sqrt{X_\infty}}$$

and
$$\left.\begin{aligned} P &= 2\coth^{-1}\sqrt{\frac{X}{X_\infty}} \\ &= 2\coth^{-1}\exp\left[\log_e\sqrt{X} - \log_e\sqrt{X_\infty}\right] \end{aligned}\right\} \quad . \quad 14(\text{ii})$$

and this is of the same form as (i), and $f(x)$ is equal to $\log_e\sqrt{X}$ and $F\{\ \}$ is $2\coth^{-1}\exp[\ ]$.

In an attenuating-band

$$P = A + jn\pi$$

where $n$ is an integer, and

$$P = 2\coth^{-1}\left|\sqrt{\frac{|X|}{|X_\infty|}}\right| + jn\pi$$

where $n$ is even when $X/X_\infty$ is positive and odd when $X/X_\infty$ is negative.

Then
$$\left.\begin{aligned} A &= 2\coth^{-1}\left|\sqrt{\frac{|X|}{|X_\infty|}}\right| \\ &= \log_e\left|\frac{\sqrt{|X/X_\infty|}+1}{\sqrt{|X/X_\infty|}-1}\right| \text{ nepers} \\ &= 20\log_{10}\left|\frac{\sqrt{|X/X_\infty|}+1}{\sqrt{|X/X_\infty|}-1}\right| \text{db} \end{aligned}\right\} \quad . \quad . \quad 14(\text{iii})$$

For the attenuating-bands a template can be constructed by plotting

$$A = 20\log_{10}\left|\frac{\sqrt{X}+1}{\sqrt{X}-1}\right| \text{db} \quad . \quad . \quad . \quad 14(\text{iv})$$

on a linear scale of $A$ and a logarithmic scale of $X$. The template curve is obtained from (iii) by putting $X_\infty = 1$.

In a pass-band,

$$P = 0 + jB$$

and
$$\coth\frac{P}{2} = \coth\frac{jB}{2}$$
$$= -j\cot\frac{B}{2}.$$

But
$$\coth\frac{P}{2} = \sqrt{\frac{X}{X_\infty}} \text{ from (ii)}$$

and
$$\cot\frac{B}{2} = j\sqrt{X}.$$

As $B$ is real, $\cot \frac{B}{2}$ will also be real, whence

$$\cot \frac{B}{2} = \sqrt{\frac{|X|}{|X_\infty|}}$$

and

$$B = 2 \cot^{-1} \sqrt{\frac{|X|}{|X_\infty|}} \quad . \quad . \quad 14(v)$$

As before, a template can be constructed for $B$ by plotting

$$B = 2 \cot^{-1} \sqrt{X} \quad . \quad . \quad . \quad 14(vi)$$

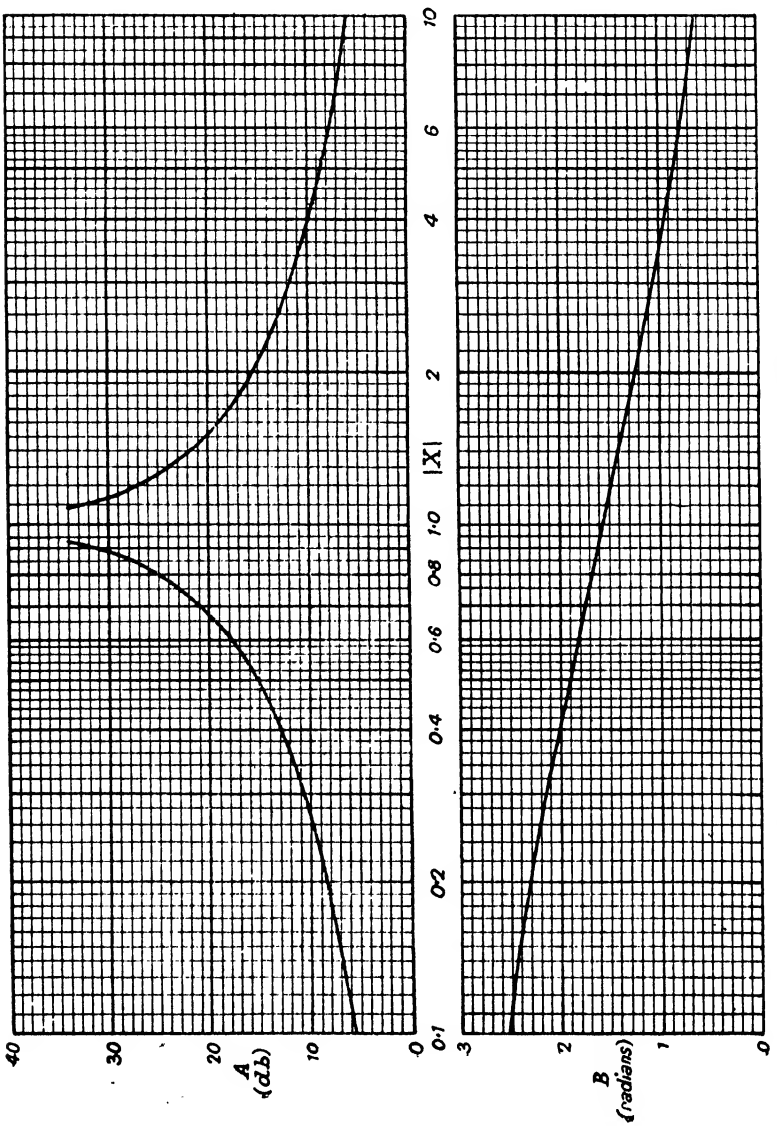


FIG. 26.—Form of Templates for the Determination of $A$ and $B$.

$$A = 20 \log_{10} \left| \frac{\sqrt{X} + 1}{\sqrt{X} - 1} \right| \text{db}$$

$$B = 2 \cot^{-1} \sqrt{X} \text{ radians.}$$

on a linear scale of $B$ and a logarithmic scale of $X$. The template curve is obtained from (v) by putting $X_\infty = 1$ as before.

Fig. 26 shows the shapes of these curves and the table below gives construction data.

| | | | | | |
|---|---|---|---|---|---|
| $X$ or $\frac{1}{X}$ . . . . | 0·01 | 0·03 | 0·1 | 0·3 | 0·5 |
| $A$(db) . . . . | 1·74 | 3·04 | 5·69 | 10·69 | 15·33 |
| $B'$ (radians) . . | 1·371 | 1·228 | 0·958 | 0·568 | 0·339 |
| $X$ or $\frac{1}{X}$ . . . . | 0·6 | 0·7 | 0·8 | 0·9 | 1·0 |
| $A$(db) . . . . | 17·92 | 21·02 | 25·10 | 31·59 | $\infty$ |
| $B'$ (radians) . . | 0·252 | 0·177 | 0·111 | 0·052 | 0 |

NOTE.—$B = 1{\cdot}571 + B'$ for $X$ and $1{\cdot}571 - B'$ for $\frac{1}{X}$.

It is useful to have two templates for $A$ and $B$, one giving $A$ for a whole section, one giving $\frac{A}{2}$ for a half-section, one giving $B$ for a whole section and one giving $\frac{B}{2}$ for a half-section. A convenient scale for $A$ is 10 db = 1 inch, and for $B$ 1 radian = 1 inch. For $X$ a convenient scale is a logarithmic scale of 1 decade = 12·5 cm. This latter may be drawn from the upper scale of a 10-inch slide rule.

If only a small number of filters are to be designed, templates may be dispensed with and the filters designed on tracing paper, the $|X|$ scale and the $A$ and $B$ curves required being obtained by tracing from Fig. 26.

It will be seen from (ii) that $\coth \frac{P}{2}$ must be expressed as $\sqrt{\frac{X}{X_\infty}}$ before we can use a template. This we will now proceed to do for all the types of filter we have dealt with in Sections 9 to 12.

**14.1.1. Low-pass Half-Sections.** From 9(vii) it can be shown that

$$\coth \frac{P_m}{2} = \sqrt{\left[\frac{1 - 1/x^2}{1 - 1/x_{2\infty}{}^2}\right]}$$

whence $\quad |X| = |1 - 1/x^2|$

and from 9(vi) $\quad m = \sqrt{X_\infty}$ . . . 14(v)

$0 < x < 1$, pass-band, $\infty > |X| > 0$

$1 < x < \infty$, attenuating-band, $0 < |X| < 1$.

Fig. 27 shows the application of the template method to the low-pass half-section.

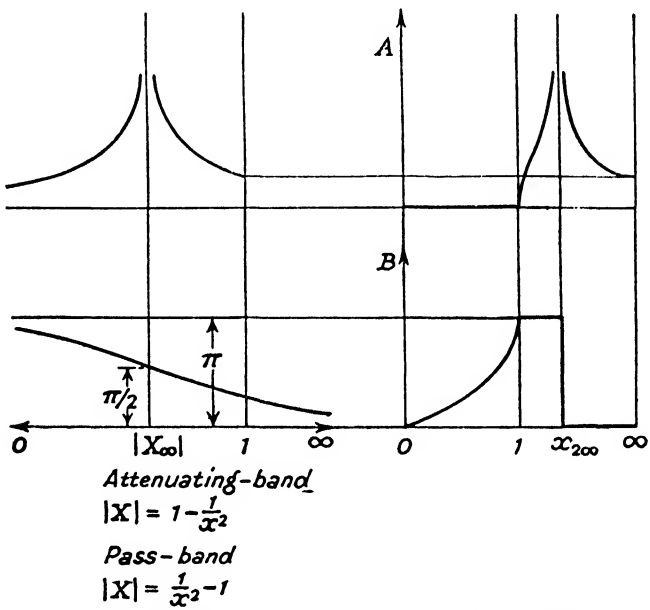


FIG. 27.—Templates applied to Low-pass Filter Section.

**14.1.2. High-pass Half-Sections.** From 10(vii) it can be shown that

$$\coth \frac{P_m}{2} = \sqrt{\left[\frac{1 - x^2}{1 - x_{1\infty}{}^2}\right]}$$

whence $\quad |X| = |1 - x^2|$

and from 10(vi) $\quad m = \sqrt{X_\infty}$ . . . 14(vi)

$0 < x < 1$, attenuating-band, $1 > |X| > 0$

$1 < x < \infty$, pass-band, $0 < |X| < 1$

It will be noticed that a direct use of the $B$-template will make $\frac{\partial B}{\partial \omega}$ negative. It is therefore necessary to change the sign of $B$. Fig. 28 shows the application of the templates to a high-pass half-section.

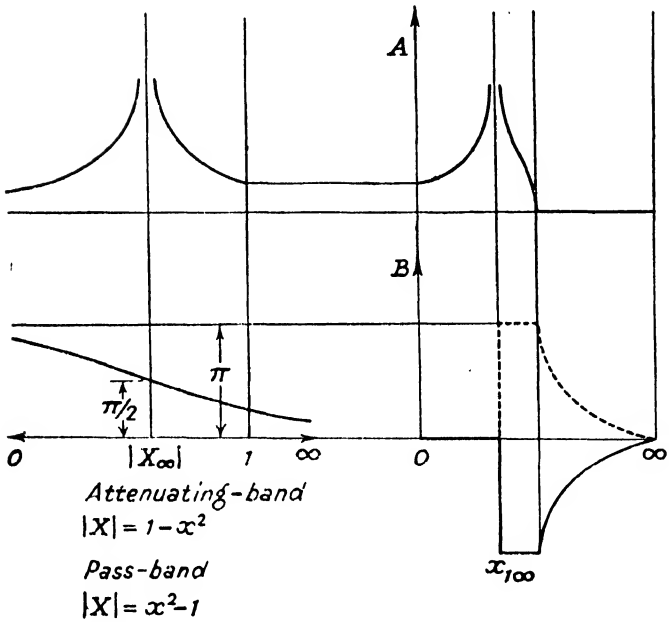


FIG. 28.—Templates applied to High-pass Filter Section.

**14.1.3. Band-pass Half-Sections (symmetrical).** From 11(vi) it can be shown that

$$\coth\frac{P_m}{2} = \sqrt{\left[\frac{(1-x^2)^2 - n^2x^2}{m^2(1-x^2)}\right]}$$

and on substituting for $m$ and $n$

$$\coth\frac{P_m}{2} = \sqrt{\left[\frac{1-(x_2-x_1)^2x^2/(1-x^2)^2}{1-(x_2-x_1)^2x_{1\infty}{}^2/(1-x_{1\infty}{}^2)^2}\right]}$$

whence

$$\left.\begin{aligned} |X| &= |1-(x_2-x_1)^2x^2/(1-x^2)^2| \\ &= |(x^2-x_1{}^2)(x^2-x_2{}^2)/(1-x^2)^2| \\ \text{and from 11 (vii)}\quad m &= \sqrt{X_\infty} \end{aligned}\right\} \quad . \quad 14\text{(vii)}$$

$$\begin{aligned} &0 < x < x_1, \text{ attenuating-band, } 1 < |X| < 0 \\ &\left.\begin{matrix} x_1 < x < 1 \\ 1 < x < x_2 \end{matrix}\right\}, \text{ pass-band } \left\{\begin{matrix} 0 < |X| < \infty \\ \infty > |X| > 0 \end{matrix}\right. \\ &x_2 < x < \infty, \text{ attenuating-band, } 0 < |X| < \infty. \end{aligned}$$

Here it will be noted that in the pass-band $1 < x < x_1$, the sign of $B$ obtained from the template will have to be changed if $\frac{\partial B}{\partial \omega}$ is to be positive.

Fig. 29 shows the application to this type of filter.

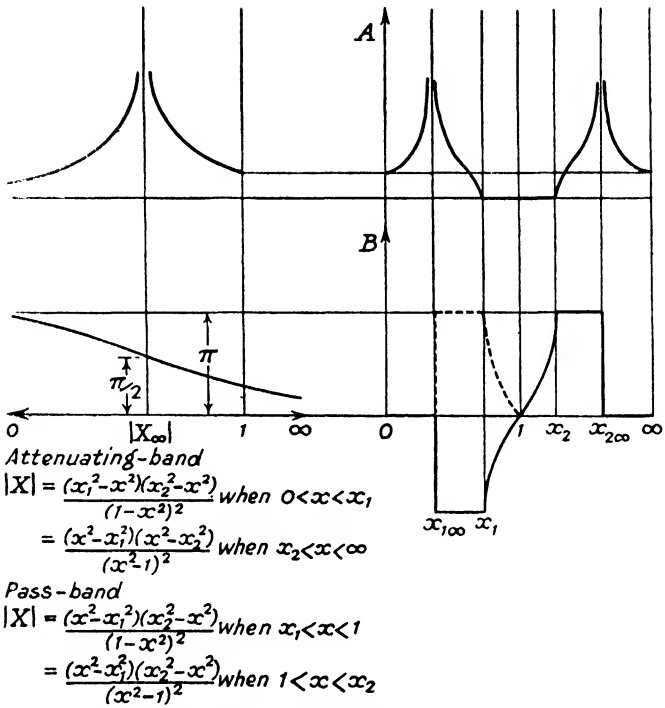


FIG. 29.—Templates applied to Symmetrical Band-pass Filter Section.

**14.1.4. Band-pass Half-Sections (4-element dissymmetrical).** From 11(xiv) or 11(xv) it may be shown that

$$\coth \frac{P_m}{2} = \sqrt{\left[\frac{(x^2 - x_1^2)(x_\infty^2 - x_2^2)}{(x^2 - x_2^2)(x_\infty^2 - x_1^2)}\right]}$$

whence
$$|X| = \left|\frac{x^2 - x_1^2}{x^2 - x_2^2}\right|.$$

As $\coth \frac{P_m}{2}$ involves the quotient $X/X_\infty$, we may multiply $X$ by any constant, as this cancels out when divided by $X_\infty$ modified similarly. It is thus more symmetrical to write

$$|X| = \left|\frac{x_2}{x_1}\left[\frac{x^2 - x_1^2}{x^2 - x_2^2}\right]\right|$$

and in order to avoid changing the sign of $B$, it is also convenient to take the reciprocal of this quantity. This we may do since we are really only concerned with $\log |X|$, and

$$\log |X| = -\log \left|\frac{1}{X}\right|.$$

Thus we will write

$$\left.\begin{aligned} |X| &= \left|\frac{x_1}{x_2}\left[\frac{x^2 - x_2^2}{x^2 - x_1^2}\right]\right| \\ \text{and from (xiv)} \qquad m_1 &= \frac{x_1}{\sqrt{X_{1\infty}}} \\ m_2 &= \frac{1}{\sqrt{X_{1\infty}}} \\ \text{and from (xv)} \qquad m_1 &= x_2\sqrt{X_{2\infty}} \\ m_2 &= \sqrt{X_{2\infty}} \end{aligned}\right\} \quad . \quad . \quad . \quad 14(\text{viii})$$

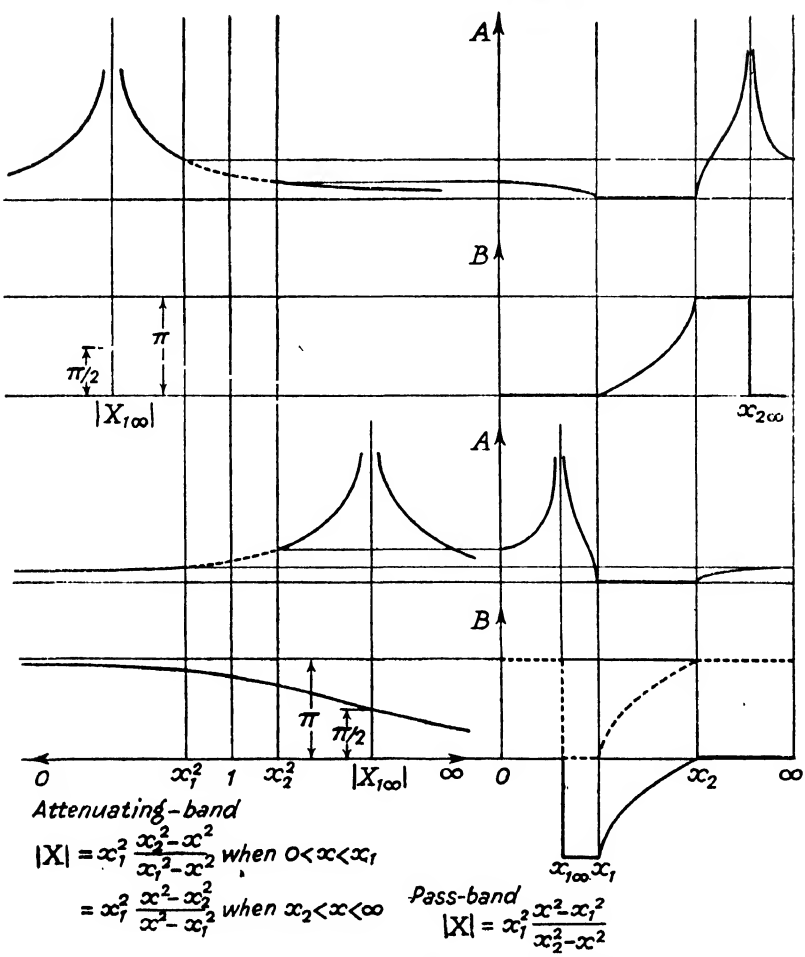


FIG. 30.—Templates applied to Dissymmetrical Band-pass Filter Sections (4-element). (The region between $x^2_1$ and $x_2^2$ on the attenuating-band field of $|X|$ corresponds to imaginary values of $x$.)

$0 < x < x_1$, attenuating-band, $x_2^2 < |X| < \infty$
$x_1 < x < x_2$, pass-band, $\infty > |X| > 0$
$x_2 < x < \infty$, attenuating-band, $0 < |X| < x_1^2$.

Fig. 30 shows the application of the templates to the two forms of 4-element dissymmetrical band-pass half-section and to a dissymmetrical 6-element band-pass half-section (formed by the addition of two 4-element curves).

**14.1.5. Band-stop Half-Sections.** From 12(v*a*) it may be shown that

$$\coth \frac{P_m}{2} = \sqrt{\left[\frac{n^2x^2 - (1 - x^2)^2}{m^2n^2x^2}\right]}$$

and on substituting for $m$ and $n$

$$\coth \frac{P_m}{2} = \sqrt{\left[\frac{(x^2 - x_1^2)(x^2 - x_2^2)x_\infty^2}{(x_\infty^2 - x_1^2)(x_\infty^2 - x_2^2)x^2}\right]}$$

whence $$|X| = \left|\frac{(x^2 - x_1^2)(x^2 - x_2^2)}{x^2}\right|$$

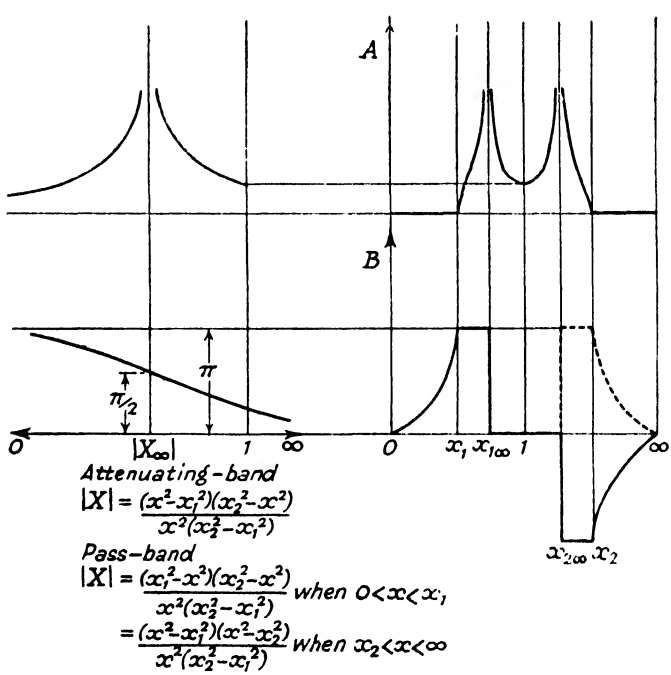


FIG. 31.—Templates applied to Band-stop Filter Section.

and making this symmetrical by multiplying by a constant, we write

$$|X| = \left|\frac{(x^2 - x_1^2)(x^2 - x_2^2)}{x^2(x_2 - x_1)^2}\right| \quad . \quad . \quad 14(\text{ix})$$

$0 < x < x_1$, pass-band, $\infty > |X| > 0$

$\left.\begin{matrix} x_1 < x < 1 \\ 1 < x < x_2 \end{matrix}\right\}$ attenuating-band $\left\{\begin{matrix} 0 < |X| < 1 \\ 1 > |X| > 0 \end{matrix}\right.$

Fig. 31 shows the application to a band-stop half-section.

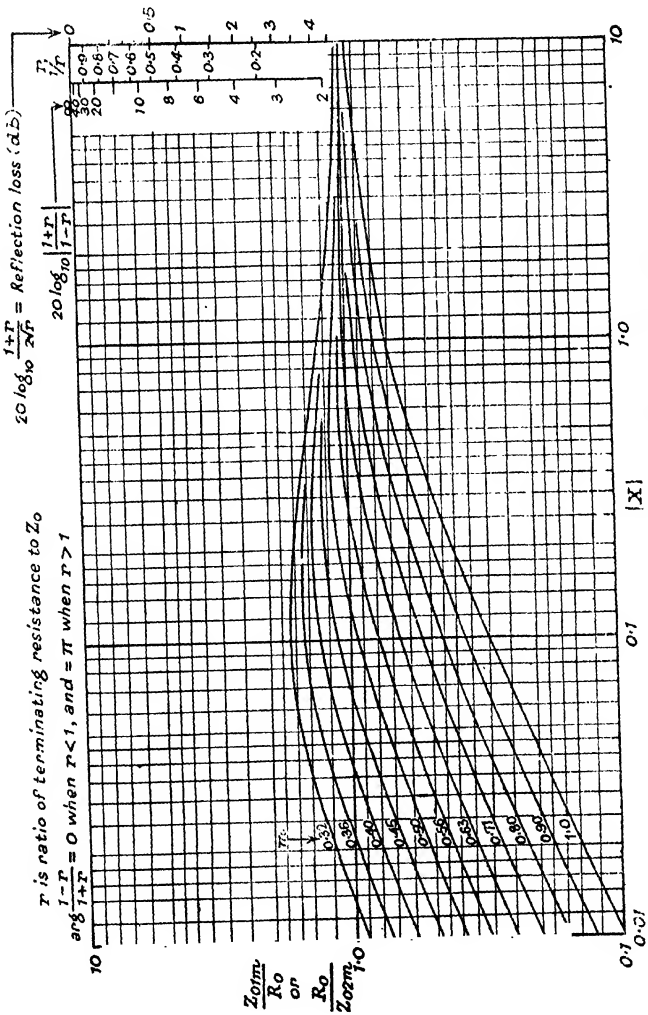


FIG. 32.—Image Impedance of Filters in Pass-band.

**14.2. Image Impedance.** Applying the relevant frequency transformations to the image impedances of low-pass, high-pass, symmetrical band-pass and band-stop half-sections it can be shown that the image impedances are given by

$$\left.\begin{aligned} \frac{Z_{01m}}{R_0} = \frac{R_0}{Z_{02m}} &= \frac{\sqrt{[X(1+X)]}}{m^2+X} \\ \text{in a pass-band, and by} \qquad & \\ \frac{Z_{01m}}{R_0} = \frac{R_0}{Z_{02m}} &= j\frac{\sqrt{[X(1-X)]}}{m^2-X} \end{aligned}\right\} \quad . \quad . \quad 14(x)$$

in an attenuating-band.

Figs. 32 and 33 show these functions, together with single-line nomographs which enable certain of the insertion-loss factors (see 8(iv)) to be evaluated.

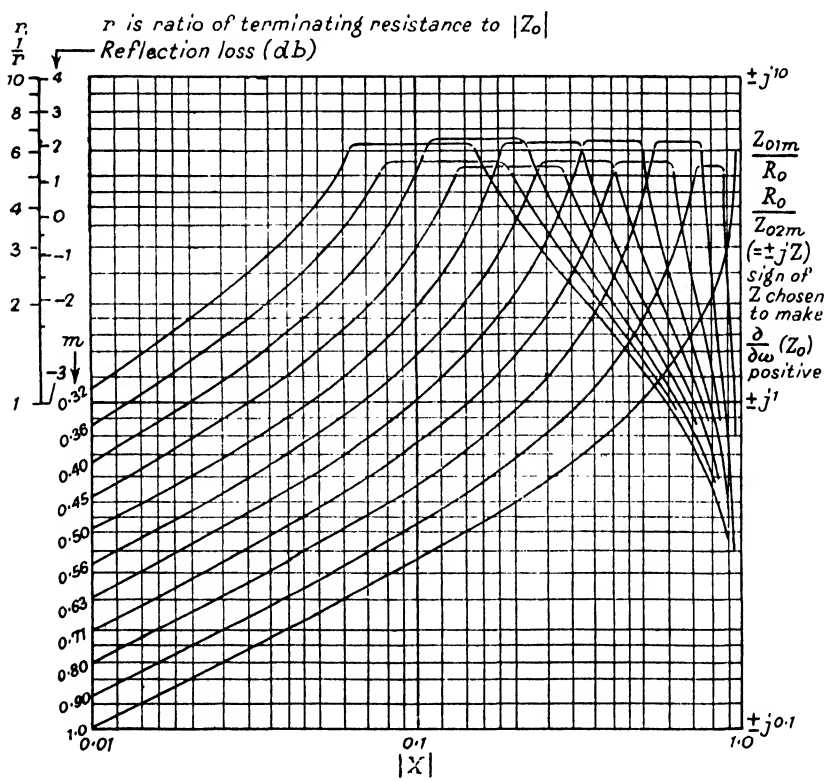


FIG. 33.—Image Impedance of Filters in Attenuating Band.

One particular factor is

$$20 \log_{10} \left| \frac{Z_A + Z_{0A}}{2\sqrt{[Z_A Z_{0A}]}} \right|$$

$$= 20 \log_{10} \frac{1+r}{2\sqrt{r}} \text{ or } 20 \log_{10} \frac{\sqrt{(1+r^2)}}{2\sqrt{r}}$$

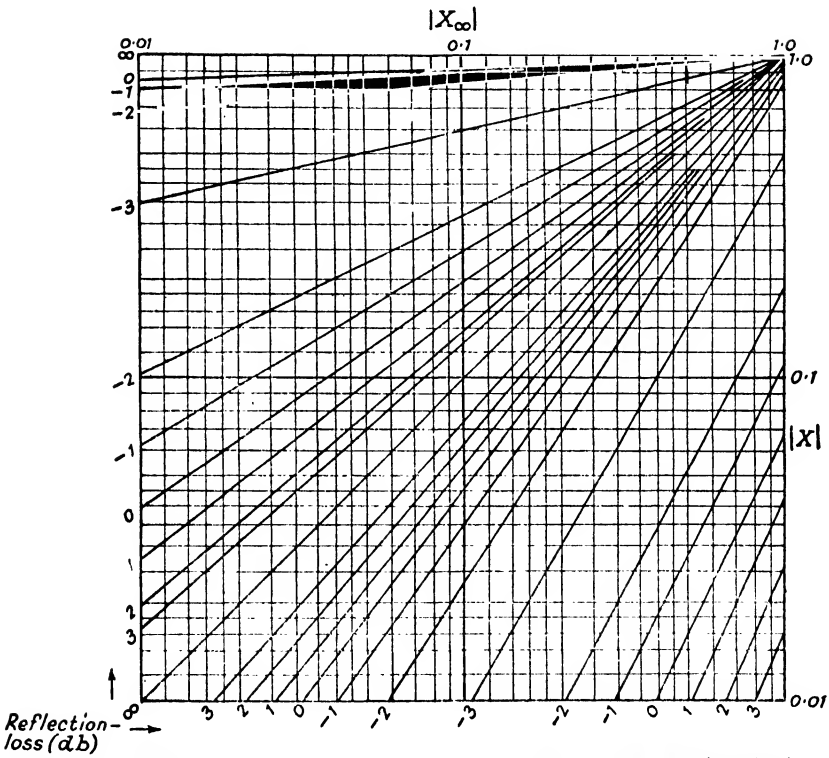


FIG. 34.—Reflection Loss in Attenuating Band of $Z_{01m}$ or $Z_{02m}$ against $R_0$ in Terms of $|X|$ and $|X_\infty|$.

when $Z_A$ is a pure resistance, and $Z_{0A}$ a pure resistance or a pure reactance respectively, and

$$\frac{|Z_A|}{|Z_{0A}|} = r.$$

The other factor is

$$\left[\frac{Z_A - Z_{0A}}{Z_A + Z_{0A}}\right]$$

$$= \left[\frac{1-r}{1+r}\right]$$

when $Z_A$ and $Z_{0A}$ are pure resistances.

As the image-impedance functions are plotted on a logarithmic scale of impedance, and the insertion-loss functions are plotted to the same logarithmic scale of $r$, we can for any value of $X$ determine these insertion-loss functions by discovering the ratio $\frac{Z_A}{R_0}$ for $Z_{01m}$ or $\frac{R_0}{Z_A}$ for $Z_{02m}$, by measuring the linear difference between this value and the image-impedance curve, and, applying this difference to the nomograph, read off the factor required. The second of the two factors is used in the calculation of the interaction factor, which may be neglected in an attenuating-band. This explains its absence from the attenuating-band set of curves.

In order to facilitate the determination of the reflection-loss factors in the attenuating-band of a filter, Fig. 34 has been constructed from Fig. 33. This graph gives a series of curves of given reflection-loss against values of $|X|$ and $|X_\infty|$.

From 14(x) and the previous equations, it will be seen that

$$m^2 = |X_\infty|$$

as was shown in the sections dealing with the frequency transformations applied to low-pass, high-pass, symmetrical band-pass and band-stop half-sections. The image-impedance curves may thus be used directly with the curves of attenuation or phase-shift coefficient for these half-sections. If, however, we wish to know the image impedances of a dissymmetrical band-pass half-section, we must use the frequency transformation applicable to a symmetrical band-pass filter of the same band-width, calculate $m_1$ and $m_2$ from the equations 11(xi), and for each value of $x$ (and therefore of $|X|$) calculate the equivalent value of $m$ from the relationship of 11·2, i.e.

$$m = \frac{m_2 - m_1 x^2}{1 - x^2}$$

Over a small range of values of $x$, we may take $m$ as remaining sensibly constant. In addition, from 14(vii) and 14(viii) we shall find that $|X|$ for a symmetrical half-section band-pass filter changes with $x$ at very nearly the same rate as does $|X|$ for a dissymmetrical half-section band-pass filter. From Fig. 26 we see that the regions of reflection-gain lie close to $|X_\infty|$ and it is with these regions that we shall be concerned when we come to design a particular filter.

As a workable approximation we may determine the image impedance of a dissymmetrical band-pass half-section about $|X_\infty|$

in the following way. Determine the ratio of $|X_\infty|$ to $x_1^2$ or $x_2^2$, whichever is the nearer (a pair of dividers may be used, as $|X|$ is plotted on a logarithmic scale) and express the ratio as a number less than 1. On Fig. 33 choose the curve with a value of $|X_\infty|$ equal to this ratio. Then the impedance at a value of $|X|$ near to $|X_\infty|$ on the dissymmetrical band-pass diagram may be obtained by determining the ratio of $|X|$ to $x_1^2$ or $x_2^2$, whichever was chosen for the original $|X_\infty|$, expressing this ratio as a number less than 1, and reading off from Fig. 33, on the curve for the chosen value there of $|X_\infty|$ the impedance factor for the value of $|X|$ equal to this ratio.

## 15. PARALLEL OR SERIES CONNECTION OF FILTERS.

Filters often have to be used so that various bands of frequencies may be separated out from a point in a circuit where all the bands are present. They are also used to assemble at one point in a circuit such a set of bands, produced in separate circuits. One example is a carrier-current telephone system, in which a number of speech circuits, each of equal band-width, are each passed through an individual frequency changer which translates the speech band to an individual part of a wide frequency band. For example, the speech band may be chosen to occupy from 0 to 3 kc/s, and Channel 1 may be translated to the frequency band 12 to 15 kc/s, Channel 2 to 16 to 19 kc/s, and so on. In the common part of the circuit, all these separate bands of frequencies are present, and at the receiving end filters are used to separate out the individual channels before they are passed through their frequency changers which translate them back to the audio frequency range 0 to 3 kc/s. A similar set of filters is necessary at the beginning of the common portion of the circuit.

One way of connecting two circuits together without any mutual interference, is by the use of hybrid transformers or bridge networks. Such networks have four pairs of terminals, $A$, $B$, $C$

and $D$. By suitable proportioning of the network and the impedances connected to, say, $C$ and $D$, $A$ and $B$ may be made conjugate. If this is so arranged, power applied to the terminals $A$ is divided between the impedances connected to $C$ and $D$, and

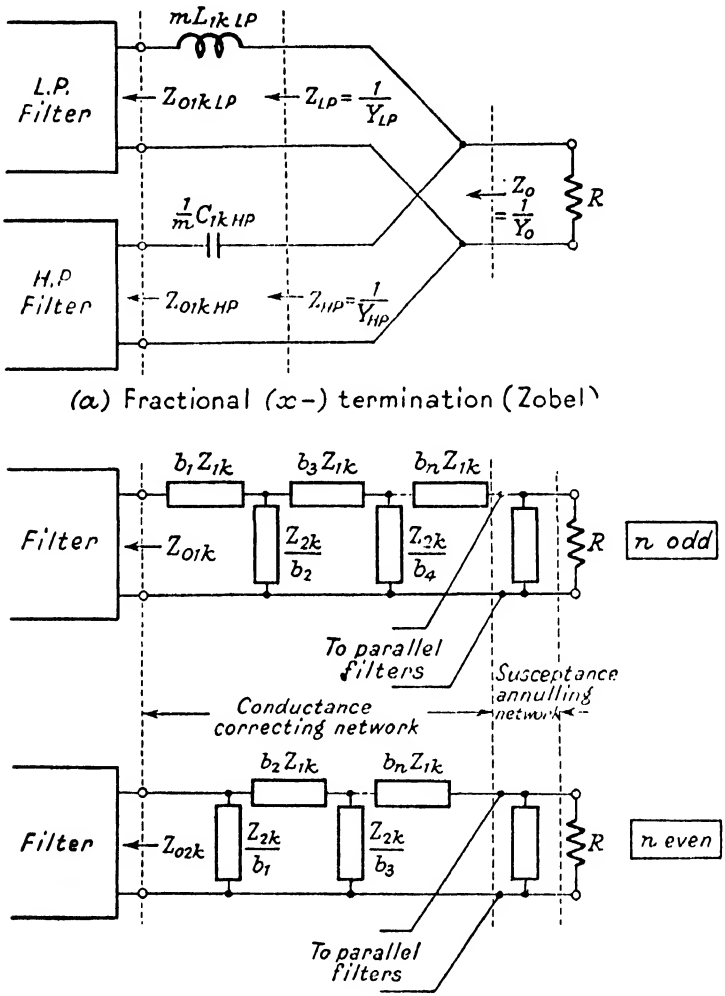


FIG. 35.—Parallel Connection of Filters.

none appears at $B$. Similarly, power applied to the terminals $B$ is divided between the impedances connected to $C$ and $D$, and none appears at $A$. Hence the loss between $A$ and $C$ (or $D$) cannot depend on the impedance of any network connected to $B$, and

the loss between $B$ and $C$ (or $D$) cannot depend on the impedances of any network connected to $A$. The insertion loss of a filter between generator and a given load differs by a certain amount from that of the same filter between the same generator, and the same load connected to $C$, the end of the filter which was connected to the load being connected to $A$. The actual value of the difference between the two insertion-losses depends only on the proportioning of the network. Such a network must be used if filters, having overlapping pass-bands, are to be connected together. If such a set of filters is to be connected together, they may be divided into sets which have non-overlapping pass-bands, the sets being connected together as described above, and the individual filters in each set are then connected together as described below.

In the case where the pass-bands of the filters are individual, and not shared, Zobel, and later Bode, have developed methods of connecting together filters, either in parallel or in series, and in using the impedances of the remaining filters to assist in the transmission through a particular filter.

Let us consider the case of a low-pass and high-pass pair of filters to be connected in parallel. Let each filter have a design impedance of unity, and let the angular velocities be referred to the cut-off angular velocity of the low-pass filter as unity. Let the cut-off angular velocity of the high-pass filter be $\frac{1}{a}$, where $a > 1$. The pass-bands of the filters are thus 0 to 1 for the low-pass, and $\frac{1}{a}$ to $\infty$ for the high-pass. The range 1 to $\frac{1}{a}$ is known as the cross-over range. We want the impedance of the complete pair of filters to be as near as possible a constant resistance in the two ranges $0 < x < 1$, and $\frac{1}{a} < x < \infty$. For either a low-pass or a high-pass filter we have seen that this may be approached in the pass-band by an $m$-derived image impedance. Let us see if a similar procedure is possible when the filters are connected in parallel.

It should be pointed out here that it is essential to terminate the far end of each filter by an image impedance which matches a constant resistance to some degree of accuracy in the pass-band.

Terminate each filter at the common end by a mid-series constant-$k$ image impedance. These are then given by

$$Z_{01kLP} = \sqrt{(1 - x^2)}\,; \quad Z_{01kHP} = \sqrt{\left(1 - \frac{1}{a^2x^2}\right)}$$

which are obtained from 9(i) and 10(i) respectively.

Add in series with each filter an impedance $m$ times its constant-$k$ series arm impedance. Then the image impedances of the two modified filters are

$$Z_{0LP} = jmx + \sqrt{(1 - x^2)}\,; \quad Z_{0HP} = \frac{m}{jax} + \sqrt{\left(1 - \frac{1}{a^2x^2}\right)}.$$

Let us now concentrate on the pass-band of the low-pass filter. Its admittance is given by $\frac{1}{Z_{0LP}}$ and is equal to $Y_{0LP}$, where

$$Y_{0LP} = \frac{1}{jmx + \sqrt{(1 - x^2)}}$$
$$= \frac{\sqrt{(1 - x^2)}}{1 - (1 - m^2)x^2} - \frac{jmx}{1 - (1 - m^2)x^2} \quad . \quad . \quad 15(\text{i})$$

If an admittance were added in parallel so that the imaginary term were made zero, the image admittance would be a pure conductance of value.

$$Y_{0LP} = \frac{\sqrt{(1 - x^2)}}{1 - (1 - m^2)x^2}$$

and this is the mid-shunt image admittance of a series-derived half-section (see 9(vi)).

In the pass-band of the low-pass filter the image impedance $Z_{01kHP}$ of the high-pass filter is a pure negative reactance, and the admittance of the filter with its added series arm is given by $\frac{1}{Z_{0HP}}$ and is equal to $Y_{0HP}$, where

$$Y_{0HP} = \frac{1}{j\left[-\sqrt{\left(\frac{1}{a^2x^2} - 1\right)} - \frac{m}{ax}\right]} \quad .. \quad . \quad 15(\text{ii})$$

In this band the image admittance of the filter pair is equal to the sum of 15(i) and 15(ii) and is given by

$$Y_0 = Y_{0LP} + Y_{0HP} = \frac{\sqrt{(1 - x^2)}}{1 - (1 - m^2)x^2}$$
$$+ jx\left[\frac{a}{m + \sqrt{(1 - a^2x^2)}} - \frac{m}{1 - (1 - m^2)x^2}\right] \quad . \quad 15(\text{iii})$$

Zobel suggested that, by a suitable choice of $m$, the imaginary part of $Y_0$ could be made to be very small over the pass-band.

The admittance which should be added in parallel with the modified low-pass filter in order to make its admittance a pure conductance is equal to

$$\frac{+jmx}{1 - (1 - m^2)x^2}.$$

This is the admittance of an impedance given by

$$\frac{1-(1-m^2)x^2}{jmx} = \frac{-j}{mx} + \frac{j(1-m^2)x}{m}.$$

The impedance of the modified high-pass filter is

$$\frac{-jm}{ax} - j\sqrt{\left(\frac{1}{a^2x^2}-1\right)}$$
$$= \frac{-j(1+m)}{ax} - j\left[\sqrt{\left(\frac{1}{a^2x^2}-1\right)} - \frac{1}{ax}\right]$$

and if we equate the first terms, giving

$$\frac{1}{mx} = \frac{1+m}{ax}$$

or

$$m = -\tfrac{1}{2} + \sqrt{[a+\tfrac{1}{4}]} \quad . \quad . \quad . \quad 15\text{(iv)}$$

the second terms will also be approximately equal over the pass-band of the low-pass filter.

From 15(iv) $m$ varies from 0·54 for $a = 0{\cdot}8$ to 0·62 for $a = 1{\cdot}0$. For these values of $m$, a good image impedance is obtained (see Fig. 32).

This method of connecting together two filters is known as "fractional terminating" or "$x$-terminating".

A similar argument applied to the high-pass filter will show that over its pass-band an equally good approximation to a constant resistance image impedance is obtained.

For a better approximation, Bode * has suggested that $m$ be chosen from the value which gives the best image impedance over the required portion of the pass-band, and that $Y_0$ is calculated for that value of $m$ (and the given value of $a$). A network is then devised which has an admittance which is $-1$ times the imaginary portion of $Y_0$. As an admittance is expressed as a conductance plus a susceptance (real and imaginary parts of $Y$, respectively) this network Bode called a *susceptance-annulling network*. This network must obviously correct the susceptance of both the low-pass and the high-pass filter, and must therefore have a negative symmetry about $x = \sqrt{\frac{1}{a}}$.† The most simple network is a series-

* "A method of impedance correction". H. W. Bode, *B.S.T.J.*, Oct. 1930, pp. 794–835.

† $F_1(x)$ and $F_2(x)$ have negative symmetry about $x = \sqrt{\frac{1}{a}}$ if

$$F_1\left(k\sqrt{\frac{1}{a}}\right) = -F_2\left(\frac{1}{k}\sqrt{\frac{1}{a}}\right)$$

for all values of $k$.

resonant circuit resonating at $x = \sqrt{\frac{1}{a}}$ and of such an admittance that it reduces the susceptance of $Y_0$ to a very low value over the required portion of the pass-band. As the resonant frequency has been chosen, only one other variable is left, and with this only one pair of conditions can be satisfied. This means that the susceptance can be completely annulled at only one frequency in each of the pass-bands, and these two frequencies are symmetrically placed about the geometric mean of the two cut-off frequencies.

As an approximation it will be found that a suitable value of $m$, when $a$ lies between 0·8 and 1·0, is 0·6, and the inductance of the inductor forming the susceptance-annulling network should have a value of about 5 times the $L_k$ value for the low-pass filter.

Bode has extended the method still further, by making the added arm into a ladder network, enabling the conductance to approximate more and more nearly to a constant value, and the susceptance more and more nearly to approach zero over the pass-band. Although the method was designed for single filters, it is equally applicable to parallel connection of filters.

If the filter ends with a mid-series constant-$k$ image impedance, the network consists of a series arm of impedance $b_1Z_1$, followed by a shunt arm of impedance $\frac{1}{b_2}Z_2$, followed by a series arm of impedance $b_3Z_1$, and so on. If the filter ends with a mid-shunt image impedance, the network consists of a shunt arm of impedance $\frac{1}{b_1}Z_2$, followed by a series arm of impedance $b_2Z_1$, and a shunt arm of impedance $\frac{1}{b_3}Z_2$ and so on. $Z_1$ and $Z_2$ are the series and shunt arms respectively of the constant-$k$ half-section. Bode has provided a table giving appropriate values for $b_1$, $b_2$, $b_3$ for from one- to three-element networks. The table is given below.

| Number of elements | $b_1$ | $b_2$ | $b_3$ |
|---|---|---|---|
| 1 . . . | 0·5564 | 0 | 0 |
| 2 . . . | 0·8986 | 1·593 | 0 |
| 3 . . . | 0·9597 | 1·924 | 1·565 |

It is suggested in the original article that these values should be used as a starting point for calculation of conductance and

susceptance of each filter, the values of the $a$'s being modified to give the best conductance fit over the required range. The combined susceptances are then obtained for the filter pair and a network designed to reduce this susceptance to a low value.

The method is applicable to the parallel connection of a number of similar band-pass filters. Each is terminated at its paralleling end in its constant-$k$ mid-series image impedance, and in series with each is added a network, of one or more elements as already described for the low- and high-pass filter pairs, choosing values of $a$ so that the conductances are sufficiently constant. The susceptances of the filters are then determined and added together, and a network constructed which, if connected in parallel with the filter group, reduces the susceptance to zero. Such a network will consist of two series-resonant circuits, one resonating below, and the other above, the two ends of the two extreme filters, and a number of series-resonant circuits, one resonating between each pair of filters. These last-mentioned networks may not always be necessary.

The susceptance-annulling network provides a peak of attenuation to all the filters at its resonant frequency. The added series impedances also add an extra loss at frequencies in the attenuating range of each filter.

As the image impedance of the combined filter is very nearly constant over the pass-bands of the separate filters, the p.d. across the terminals of the combined filters will be equal to one-half of the e.m.f. of the source supplying the filters, assuming that the source is matched to the filters. It may be shown quite simply that a loss of

$$20 \log_{10} \frac{\sqrt{(x^2 - 1)} + mx}{\sqrt[4]{(x^2 - 1)}} \text{ db}$$

is introduced by the series arm in that part of the attenuating range of each filter that lies in the pass-band of another paralleled filter, and this we may take as being constant, and equal to 5 db over a large portion of the attenuating-band. The value of 5 db is a minimum value. The total extra loss of the added impedance and the susceptance-annulling network may therefore contribute a substantial extra loss in the attenuating-band.

It should also be noted that there is no reflection-gain at this end of the filter, the loss just referred to taking this place. Thus a paralleled filter may be designed to an image attenuation coefficient of (insertion-loss + 3 db − 5 db) instead of (insertion-loss + 3 db + 3 db) for a single filter.

An exactly similar argument may be used for the series connection of filters, if for admittance we read impedance, and for mid-series we read mid-shunt, and *vice versa*. The filters will be terminated in mid-shunt constant-$k$ image impedances, the added networks will be $\frac{1}{m}$ times the constant-$k$ half-section shunt arms added in parallel with the filters, and the reactance controlling network will be a parallel-resonant circuit (or a number of such circuits) in series with the whole series-connected circuit.

It may happen that a filter is required having an image impedance which is a constant resistance over the whole frequency range. This we can now provide, by designing a filter having an attenuating-band where the required filter has a pass-band, and *vice versa*, and combining them in parallel as described in this section. The complementary filter need only have one half-section, which should present a constant-$k$ image impedance to the paralleled filter and an $m$-derived image impedance at the other end to enable it to be terminated by a resistor.

## 16. EXAMPLES OF LADDER-TYPE FILTER DESIGN.

In this chapter we will consider the actual design of a number of filters which will have to meet specified requirements. We shall also deal with the series or parallel working of filters.

We have shown (Section 6) that, for a given cut-off frequency, or frequencies, it is possible to produce filter half-sections having differing image transfer coefficients, but which have either mid-series or mid-shunt image impedances which are all equal to the mid-series or mid-shunt image impedance of the constant-$k$ half-section. We have also shown (Section 6) that if half-sections are connected in tandem so that adjacent image impedances are equal, then the image transfer coefficient of a chain of such half-sections is equal to the sum of the image transfer coefficients of the separate half-sections, and the two image impedances of the whole network

are the image impedances of the two free ends of the two terminal half-sections.

The design of a filter is thus carried out by determining the number and types of half-sections which will give a total image transfer coefficient equal to the desired values, and adding these half-sections together in tandem so that at each junction point between adjacent half-sections, equal image impedances are connected together. It is usual to add together similar half-sections with the same value of $m$, so that a whole section is formed, both free image impedances being constant-$k$ mid-series or mid-shunt image impedances. These whole sections may then be joined in tandem, the complete filter being terminated if necessary in half-sections, whose constant-$k$ image impedances are connected to the adjacent whole sections, and whose derived image impedances are presented to generator and load.

**16.1. Low-pass and High-pass Filter.** Let us consider the design of a low-pass filter to the following requirements:

(i) To be used between generator and load each of 500 ohms impedance.

(ii) Insertion-loss from 0 to 3 kc/s to be flat $\pm 0{\cdot}25$ db.

(iii) Insertion-loss from 4·688 to 7·50 kc/s to exceed 50 db.

(iv) Insertion-loss from 7·50 kc/s to $\infty$ to exceed 30 db.

At the same time let us consider the design of a high-pass filter to meet the following requirements:

(v) To be used between generator and load each of 700 ohms impedance.

(vi) Insertion-loss from 5 kc/s to $\infty$ to be flat $\pm 0{\cdot}25$ db.

(vii) Insertion-loss from 3·2 kc/s to 2 kc/s to exceed 50 db.

(viii) Insertion-loss from 0 to 2 kc/s to exceed 30 db.

These two sets of requirements have been chosen so that a similar construction will be suitable for the two filters.

In the low-pass case, it is obvious that the pass-band must extend from 0 to some frequency between 3 kc/s and 4·688 kc/s. Let us choose the geometric mean as the cut-off frequency, i.e. $\sqrt{(3 \times 4{\cdot}688)}$. This is equal to 3·75 kc/s. Referring all frequencies to this cut-off frequency as unity, the requirements may now be stated thus:

(ii*a*) Insertion-loss from $x = 0$ to $x = 0{\cdot}8$ to be flat $\pm 0{\cdot}25$ db.

(iii*a*) Insertion-loss from $x = 1{\cdot}25$ to $x = 2{\cdot}0$ to exceed 50 db.

(iv*a*) Insertion-loss from $x = 2{\cdot}0$ to $x = \infty$ to exceed 30 db.

Let us now convert these requirements of $x$ (ratio of frequency

to cut-off frequency) to equivalent requirements in $X$, the low-pass frequency transformed parameter of 14·1, where

$$|X| = |1 - 1/x^2| \quad . \quad . \quad . \quad . \quad 14(v)$$

The important points in the requirements have the following values of frequency, $x$ and $X$.

| Frequency (kc/s) . | 0 | 3 | 3·75 | 4·688 | 7·5 | ∞ |
|---|---|---|---|---|---|---|
| $x$ . . . . . | 0 | 0·8 | 1·0 | 1·25 | 2·0 | ∞ |
| $\|X\|$ . . . . . | ∞ | 0·56 | 0 | 0·36 | 0·75 | 1 |
| | pass-band | | | attenuating-band | | |

Slide-rule accuracy is adequate.

In the high-pass case, the cut-off frequency must lie between 3·2 kc/s and 5 kc/s. Let us again choose the geometric mean, which is 4 kc/s. We may now rewrite the requirements as

(vi*a*) Insertion-loss from $x = 1{\cdot}25$ to $x = \infty$ to be flat $\pm 0{\cdot}25$ db.

(vii*a*) Insertion-loss from $x = 0{\cdot}8$ to $x = 0{\cdot}5$ to exceed 50 db.

(viii*a*) Insertion-loss from $x = 0$ to $x = 0{\cdot}5$ to exceed 30 db.

By means of 14·2 let us convert these values of $x$ to equivalent values of $X$ by the use of the relationship

$$|X| = |1 - x^2| \quad . \quad . \quad . \quad 14(vi)$$

| Frequency (kc/s) . | 0 | 2 | 3·2 | 4 | 5 | ∞ |
|---|---|---|---|---|---|---|
| $x$ . . . . . | 0 | 0·5 | 0·8 | 1 | 1·25 | ∞ |
| $\|X\|$ . . . . . | 1 | 0·75 | 0·36 | 0 | 0·56 | ∞ |
| | attenuating-band | | | | pass-band | |

It will be seen that the requirements of both filters may be expressed as follows.

In the pass-band, the insertion-loss is to be flat $\pm 0{\cdot}25$ db from $|X| = 0{\cdot}56$ to $|X| = \infty$.

In the attenuating range, the insertion-loss is to be greater than 50 db from $|X| = 0{\cdot}36$ to $|X| = 0{\cdot}75$, and greater than 30 db from $|X| = 0{\cdot}75$ to $|X| = 1{\cdot}0$.

In order to save the labour of calculating the whole of the

insertion-loss expression in the attenuating-band, let us add 6 db to the attenuating-band requirements and design on an image attenuation coefficient basis to meet this higher loss requirement. Thus when $|X|$ lies between 0·36 and 0·75, let us take the require-

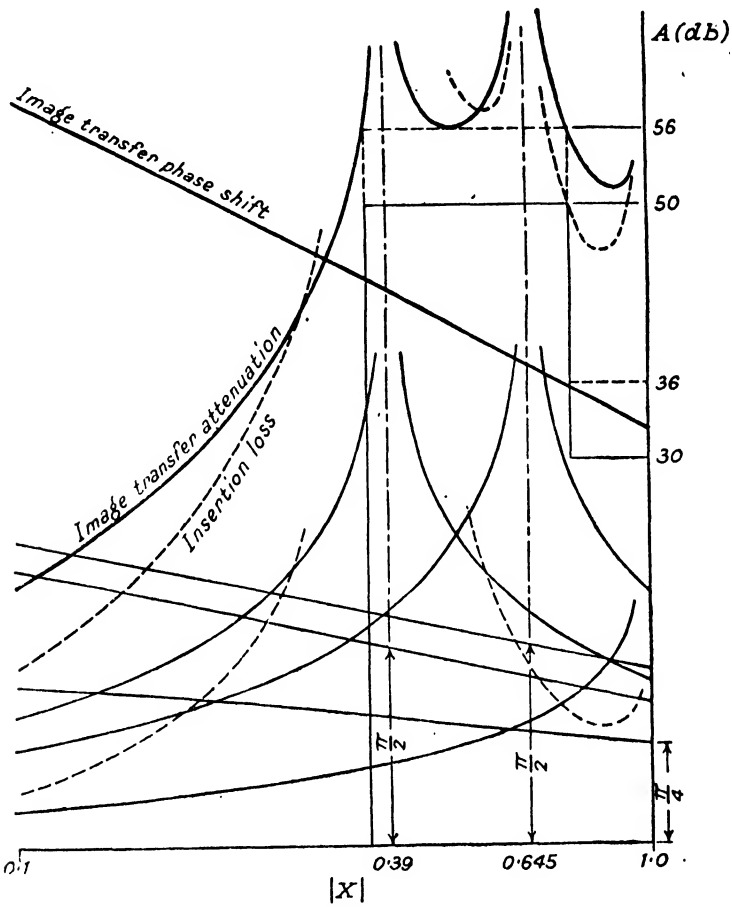


FIG. 36.—L.P. or H.P. Filter designed on Image Transfer Attenuation.

ment as a minimum of 56 db, and when $|X|$ lies between 0·75 and 1·0, as 36 db. These modified requirements are set out in Fig. 36.

We will start by trying to meet the attenuating-band requirements alone.

It is immediately obvious that a single section will not meet these requirements as with $X_\infty$ equal to 0·5 an image attenuation

of 20 db will be offered at $X$ equal to 0·36 and 0·75. With two sections, one with $X_\infty$ equal to 0·36 and one with $X_\infty$ equal to 0·75, it will be found that mid-way between 0·36 and 0·75 the curves intersect at an attenuation of about 22 db. Thus the minimum image attenuation will be twice this, i.e. about 44 db. This is still insufficient to meet the requirement of 56 db. Now from the point of view of number of elements, a constant-$k$ section is most economical, so as the deficit is small (12 db) let us try a half-section of constant-$k$ form. For this $m = 1$, and $X_\infty = 1$. This will give us an extra 8 db at the point of intersection of the image-attenuation curves of the two whole sections. By moving the $X_\infty$ values of the two whole sections closer together we can increase the image attenuation between the two points of infinite attenuation, at the expense of the image attenuation beyond these points of infinite attenuation. The final arrangement is shown in Fig. 36. We now have one whole section with $X_\infty$ equal to 0·39, one with $X_\infty$ equal to 0·645 and half a section with $X_\infty$ equal to 1·0. The attenuation requirements are seen to be realized. On the same figure the phase characteristics have been drawn. We will use these later to calculate the effect of dissipation in the pass-band.

The $m$-values of the sections chosen are given by $\sqrt{X_\infty}$ for each section and are 0·6245, 0·8031 and 1·0. Over the required pass-band Fig. 32 shows that an $m$-derived image impedance with an $m$-value of 0·63 does not deviate from $R_0$ by more than 2%. Let us choose this as the terminating half-section image impedances. In the attenuating-band Fig. 34 shows that with $X$ lying between 0·011 and 0·27, and between 0·54 and 0·95, the mis-match terms of the insertion-loss expression are negative. The dotted curve of Fig. 36 shows the effect of these mis-terminating terms. It is obtained by adding twice the mis-matching loss obtained from Fig. 34 for $m = 0{\cdot}63$, to the image-attenuation curve. It will be seen that the insertion-loss exceeds the insertion-loss requirements with a minimum of some 7 db in hand at $X$ equal to 0·56. It is probably just possible to realize the required insertion-loss by two sections by careful design, and this we will attempt after completing the calculation of the filters as already designed.

Let us now consider the effect of dissipation in the pass-band. Fig. 37 shows the phase-shift coefficient of the complete low-pass filter which has been obtained by converting $|X|$ values to $x$ values by the relationship

$$x = \frac{1}{\sqrt{(1+|X|)}}$$

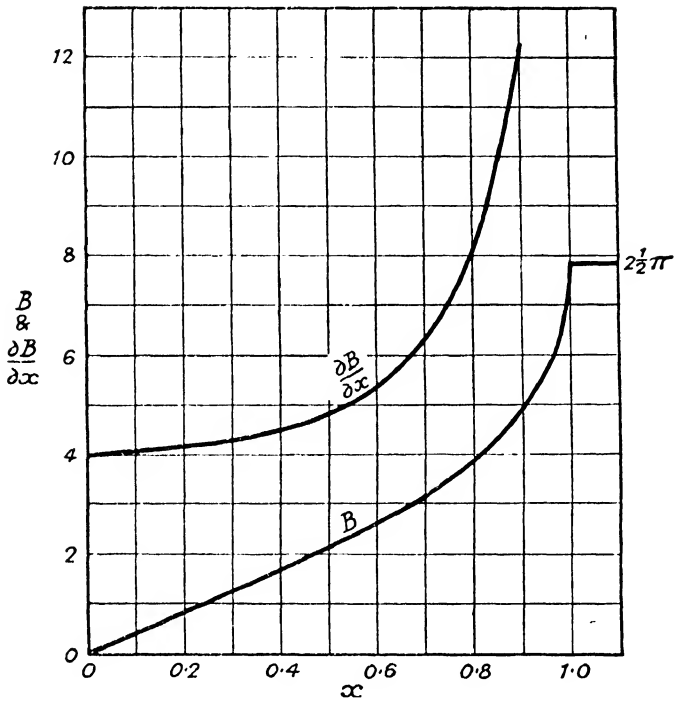


FIG. 37.—Image Transfer Phase-shift of L.P. Filter of Fig. 36, and its First Derivative with respect to $x$.

where $x$ applies to the low-pass filter. Graphical construction (tangents being drawn to the curve) gives the derived curve, $\frac{\partial B}{\partial x}$, which is also shown in Fig. 37. It was stated in Section 13 that the attenuation coefficient in a pass-band is given by

$$A_{\text{db}} \doteqdot 4{\cdot}35\omega(d_L+d_C)\frac{\partial B_0}{\partial \omega} \quad . \quad . \quad 13(\text{iv})$$

and on writing

$$\frac{\omega}{\omega_0} = x$$

$$d = d_L+d_C$$

this reduces to

$$A_{\text{db}} \doteqdot 4{\cdot}35 . xd\frac{\partial B_0}{\partial x}.$$

Now in general, using mica capacitors, $d_L \gg d_C$ and to a sufficient degree of accuracy we may say that $d \propto \frac{1}{x}$, and writing $d_0$ as the

value of $d_L$ at the cut-off frequency

$$A_{\text{db}} \doteqdot 4{\cdot}35 d_0 \frac{\partial B_0}{\partial x}.$$

The difference between $\frac{\partial B_0}{\partial x}$ at $x$ equal to 0 and 0·8 is 4·2. The mis-match over this range is of the order of 0·01 db and may be neglected. Thus $A_{\text{db}}$ may vary by $2 \times 0{\cdot}25$ db between $x$ equal to 0 and 0·8, and

$$0{\cdot}5 > 4{\cdot}35 d_0 . 4{\cdot}2$$

and

$$\frac{1}{d_0} > 36{\cdot}5.$$

Thus with perfect capacitors and inductors with $Q$'s $\left(= \frac{1}{d_L}\right)$ which at the cut-off frequency exceed say 37, the insertion-loss in the pass-band of the low-pass filter will not deviate from a constant loss by more than $\pm 0{\cdot}25$ db from 0 to 3 kc/s.

In the same way we may draw the phase-shift characteristic of the high-pass filter by converting from $X$ to $x$ by means of the relationship

$$x = \sqrt{(1+X)}.$$

A graphical construction will then give us $\frac{\partial B}{\partial x}$. At the required lower pass frequency of the filter (5 kc/s) $x$ is equal to 1·25 and here $\frac{\partial B}{\partial x}$ is equal to 4·8. At an infinite frequency $x$ is infinite and $\frac{\partial B}{\partial x}$ is zero. Thus the change in $\frac{\partial B}{\partial x}$ over the required pass-range of $x$ will be 4·8. This is of the same order as was obtained for the low-pass filter and it will be apparent that a similar value of $Q$ will be necessary to satisfy the design requirements in the pass range.

Let us now continue with the design of the low-pass filter. We have decided that this shall take the form of one half-section with $m$ equal to 1, one whole section with $m$ equal to 0·6245 and one whole section with $m$ equal to 0·8031, with image impedances at both ends of the filter being the derived image impedances with $m$ equal to 0·6245.

There are two ways in which we are able to design to these parameters. They are shown in Fig. 38 (*a*) and (*b*) in skeleton form.

In the form shown in Fig. 38(*a*) the left-hand half-section is a mid-shunt-derived half-section with $m$ equal to 0·6245. A mid-

series-derived impedance is presented to the external circuit. On the right of this half-section we have two mid-shunt-derived half-sections, each with $m$ equal to 0·8031. The two half-sections are joined together at their mid-series-derived impedance points, thus forming a $\pi$ whole section, both ends of which have constant-$k$ mid-shunt image impedances. The left-hand end is connected to the left-hand terminal half-section at its mid-shunt constant-$k$ image impedance point. Still further to the right we have a constant-$k$ (i.e. $m = 1$) half-section, whose mid-shunt image impedance point is connected to the right-hand mid-shunt constant-$k$ image impedance point of the preceding section. Finally, we have

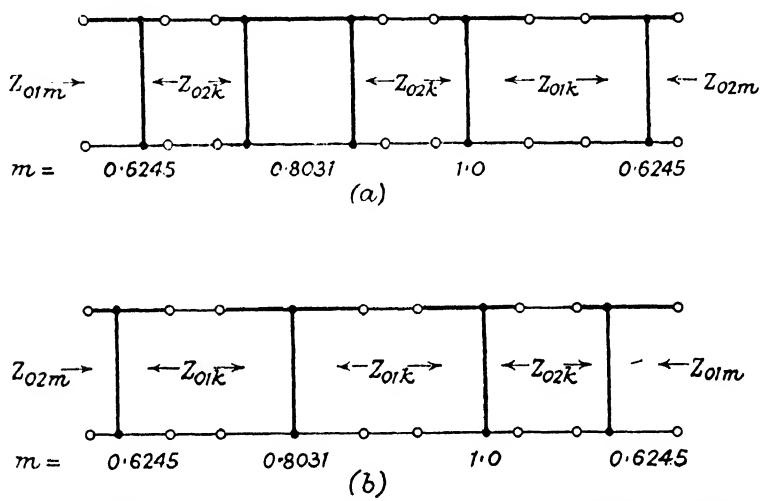


FIG. 38.—Two Possible Assemblies of L.P. and H.P. Filters in Fig. 36.

a mid-series-derived half-section with $m$ equal to 0·6245 whose mid-series constant-$k$ image impedance is connected to the mid-series constant-$k$ image impedance point of the preceding half-section, and whose derived mid-shunt image impedance is presented to the external load. Thus, inside the filter, the image impedances on both sides of each junction between adjacent half-sections are equal, and at the two free ends of the filter, we have derived image impedances, one shunt derived and the other series derived, with $m$-values equal to 0·6245.

The form shown in Fig. 38($b$) is similar, but with the expressions mid-series and mid-shunt interchanged. The left-hand half-section is a series-derived half-section with $m$ equal to 0·6245, showing a mid-shunt-derived image impedance to the external circuit. To its left is connected a whole series-derived section, each end being

a point of mid-series constant-$k$ image impedance. To its right is connected a constant-$k$ half-section whose mid-series end is connected to the right-hand end of the previous section, and whose mid-shunt end is connected to the mid-shunt constant-$k$ image impedance end of a shunt-derived half-section with an $m$-value of 0·6245. This last presents a mid-series-derived image impedance with $m$ equal to 0·6245 to the external circuit.

We have the requirement that the filter is to work between impedances of 500 ohms and we will choose this as the design

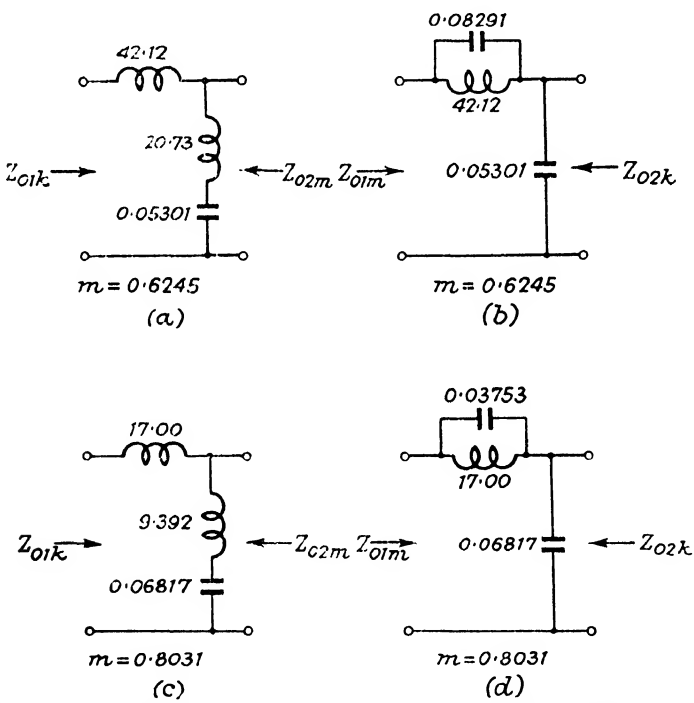


FIG. 39.—Component Half-sections of Low-pass Filter of Figs. 36–38.

impedance, $R_0$. In addition, the cut-off frequency was chosen as 3·75 kc/s. The cut-off angular velocity, $\omega_0$, is given by $2\pi \times 3{\cdot}75 \times 10^3$ radians per second.

Thus $L_k = \dfrac{R_0}{\omega_0}$, and $C_k = \dfrac{1}{R_0\omega_0}$, from 9(iv). Substituting for $R_0$ and $\omega_0$, we find that $L_k$ is equal to 0·02122 henries, or 21·22 mH, and $C_k$ is equal to $0{\cdot}08488 \times 10^{-6}$ farads, or 0·08488 $\mu$F. In addition to these figures we shall use $m$ and $\dfrac{1-m^2}{m}$ for the derived

half-sections. When $m$ is equal to 0·6245, $\frac{1-m^2}{m}$ is equal to 0·9767, and when $m$ is equal to 0·8031, $\frac{1-m^2}{m}$ is equal to 0·4421. The inductance values we shall need to make up the filter in its

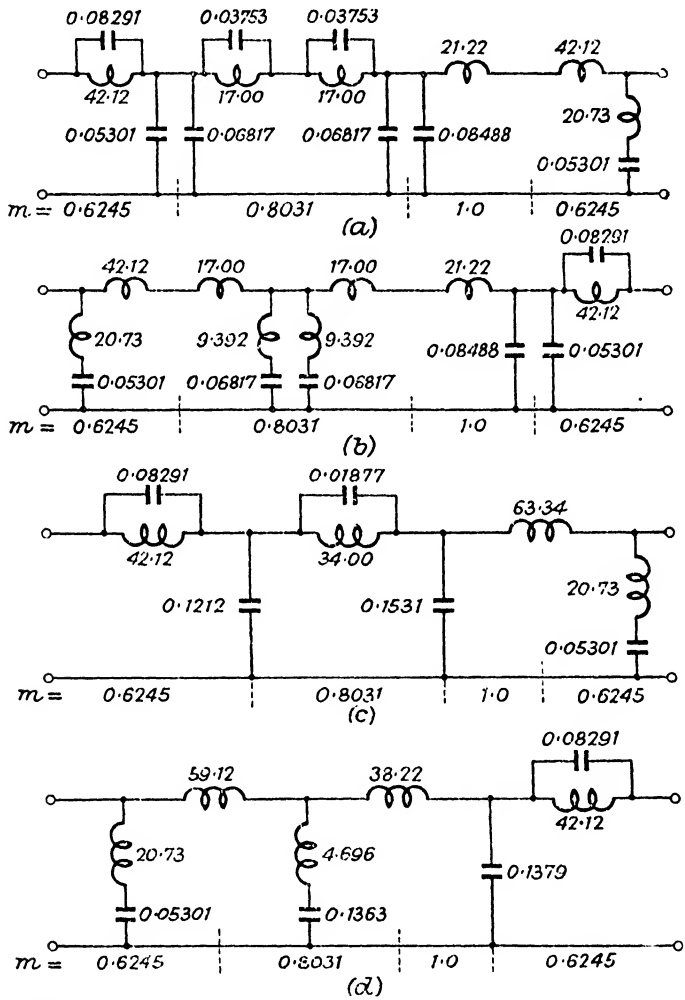


FIG. 40.—Low-pass Filter of Figs. 36-39. Inductance in $mH$, Capacitances in $\mu$F.

two forms are $mL_k$ and $\frac{1-m^2}{m}L_k$, and the capacitance values $mC_k$ and $\frac{1-m^2}{m}C_k$. For $m$ equal to 0·6245, $mL_k$ is equal to 42·12 mH,

$\frac{1-m^2}{m}L_k$ is equal to 20·73 mH, $mC_k$ is equal to 0·05301 $\mu$F and $\frac{1-m^2}{m}C_k$ is equal to 0·08291 $\mu$F. The series- and shunt-derived half-sections are shown in Figs. 39 (*a*) and (*b*) respectively. With $m$ equal to 0·8031, $mL_k$ is equal to 17·00 mH, $\frac{1-m^2}{m}L_k$ is equal to 9·392 mH, $mC_k$ is equal to 0·06817 $\mu$F and $\frac{1-m^2}{m}C_k$ is equal to 0·03753 $\mu$F. The series- and shunt-derived half-sections are shown in Fig. 39 (*c*) and (*d*) respectively.

Making up the filter in each of the two forms shown in Fig. 39 (*a*) and (*b*), we get the filter structures shown in Figs. 40 (*a*) and (*b*),

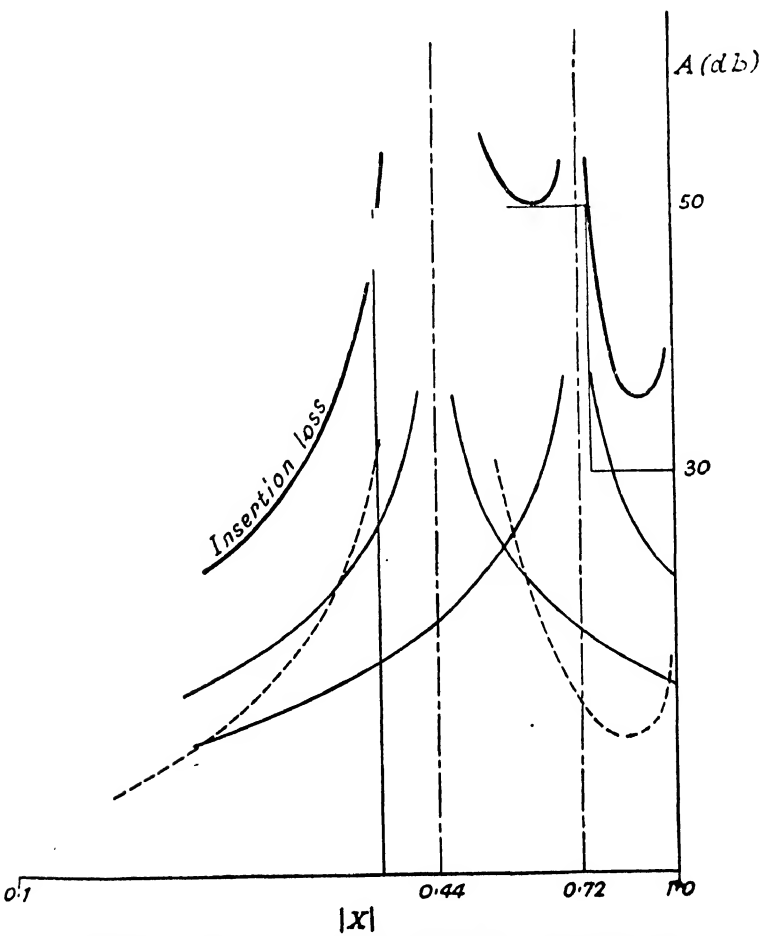


Fig. 41.—L.P. or H P. Filter designed on Insertion-loss.

which on combining the arms on either sides of each junction point give the final filters of Figs. 40 (*c*) and (*d*) respectively.

The high-pass filter design may be completed in a similar manner.

In Fig. 36 it will be seen that at the minimum of insertion-loss occurring at $X$ equal to 0·55 approximately, the insertion-loss exceeds the requirement by 7 db. It will also be noticed that the component of the insertion-loss due to the half-section of $m = 1$ is 8 db at that same value of $X$. It seems likely that the insertion-loss characteristic could be met by two sections, thus saving half a section. If we remove the constant-$k$ half-section we shall be left with a deficit of 1 db at $X = 0{\cdot}55$ and about 11 db at $X = 0{\cdot}75$. We shall, however, have too high an insertion-loss at $X$ less than 0·36. If we move the left-hand peak away from $X_\infty = 0{\cdot}39$ to a higher value of $X$, the insertion-loss at $X$ less than 0·36 will be reduced, and at $X$ greater than about 0·4 will be increased. Let us try a peak at $X$ equal to 0·44. Fig. 41 shows its image attenuation in full lines and its insertion-loss in dotted lines, assuming that the filter is to be terminated at each end by derived image impedances of $m$ equal to $\sqrt{0{\cdot}44}$. We can now choose a suitable position for $X_\infty$ for the other section, and it is found that $X_\infty = 0{\cdot}72$ will satisfy the insertion-loss requirements. The filter will then consist of two whole sections, one with $m$ equal to 0·663 (i.e. $\sqrt{0{\cdot}44}$) and the other with $m$ equal to 0·849 (i.e. $\sqrt{0{\cdot}72}$). The actual form taken by the two possible types of the low-pass filter are shown in Figs. 42 (*a*) and (*b*). Comparing these with the filters shown in Figs. 40 (*c*) and (*d*), it will be seen that one element

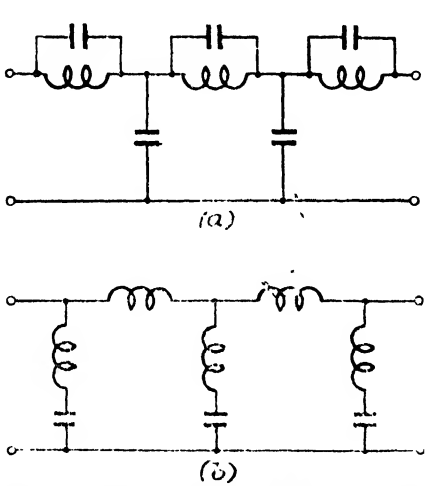


FIG. 42.—Form of L.P. Filter of Fig. 41.

has been saved in each type. The time taken to design a filter in this way is longer than a design to meet the minimum insertion-loss plus 6 db, and it depends on the number of filters of one sort to be constructed whether the additional time spent in design is outweighed by the reduction in cost of the filters. Space or weight may, of course, justify the increase in time spent on a design which meets the insertion-loss requirements. One further reason for the design to insertion-loss requirements is that in general fewer sections will be required. This will mean a reduction in the phase-shift coefficient with a consequent reduction in derived phase-shift, $\frac{\partial B_0}{\partial x}$, which in turn will allow of a reduction in quality (i.e., $Q$'s) of the components.

**16.2. Band-pass Filter.** If the design insertion-loss requirements are symmetrical about the mid-band frequency, or are very nearly symmetrical, the use of the relationship between $x_1$ and $|X|$ given for a symmetrical band-pass filter in 14(vii) should be used. In the attenuating-bands $|X|$ will lie between 0 and 1 and in the symmetrical case the requirements for the two pass-bands, when plotted against $|X|$ will lie one on the other. When the requirements are not exactly symmetrical, the two requirements, plotted against $|X|$ will overlap, and we shall have to design to the envelope of the requirements. The procedure followed in determining the number and $m$ or $|X_\infty|$ values of the sections is as has already been described for the low- and high-pass filters we discussed in **16.1.** In determining the actual element values of the filter, we will, of course, use the relationships given in Figs. 17 and 19.

The case of a dissymmetrical filter will now be considered, using the following design as an example.

Insertion-loss requirements:

To exceed 30 db from 20·1 to 30·3 kc/s.

To exceed 50 db from 88·1 to 98·3 kc/s.

To exceed 40 db from 98·3 kc/s to $\infty$.

To exceed 60 db at 68 kc/s.

To deviate from a constant loss by not more than $\pm 0{\cdot}1$ db from 37·7 to 47·9 kc/s.

Impedance: To work between generator and load, each of 600 ohms impedance.

The two cut-off frequencies must lie between 30·3 and 37·7 kc/s, and between 47·9 and 68 kc/s. Let us choose the geometric means between these pairs of frequencies as the cut-off frequencies. Then

33·8 kc/s ($= \sqrt{(30{\cdot}3 \times 37{\cdot}7)}$kc/s) is the lower cut-off frequency, and 57·1 kc/s ($= \sqrt{(47{\cdot}9 \times 68)}$ kc/s) is the upper cut-off frequency. These cut-off frequencies will be determined later to a higher degree of accuracy which is essential for the calculation of the element values, but at present these values, which are 10-inch slide-rule values, will suffice. Then the mid-band frequency is 44 kc/s ($= \sqrt{(33{\cdot}8 \times 57{\cdot}1)}$ kc/s). This last frequency we shall keep throughout the design. The insertion-loss requirements are now expressed in terms of loss and $x$ values as given below:

Insertion-loss requirements:

To exceed 30 db when $0{\cdot}457 < x < 0{\cdot}688$.

To exceed 50 db when $2{\cdot}0 < x < 2{\cdot}235$.

To exceed 40 db when $2{\cdot}235 < x < \infty$.

To exceed 60 db at $x = 1{\cdot}546$ (approx.).

To deviate from a constant loss by not more than $\pm 0{\cdot}1$ db when $0{\cdot}856 < x < 1{\cdot}088$.

In addition we have chosen $x_1 = 0{\cdot}768$ and $x_2 = 1{\cdot}298$.

Let us consider first the attenuation-band requirements.

By the use of

$$|X| = \frac{x_1}{x_2}\left[\frac{x_2^2 - x^2}{x_1^2 - x^2}\right]$$

which is obtained from 14(vii) for the attenuating-bands, the equivalent values of $|X|$ for the essential values of $x$ are calculated and are given below. A slide-rule still gives sufficient accuracy.

| $x$ . . . . . | 0·457 | 0·688 | 0·768 | 1·298 | 1·546 | 2·0 | 2·235 | $\infty$ |
|---|---|---|---|---|---|---|---|---|
| $\lvert X \rvert$ . . . | 2·294 | 6·10 | $\infty$ | 0 | 0·2326 | 0·40 | 0·448 | 0·59 |

The requirements are shown plotted in Fig. 43.

Let us start by choosing values of $|X_\infty|$ at 0·233 and at 0·424. These two values of $|X_\infty|$ will very nearly meet the requirements in the upper attenuating-band. Sketching in the values of attenuation at $|X|$ equal to 2·294 and 6·10 for $|X_\infty|$ equal to 4 shows that the attenuation requirements in the lower attenuating-band are also nearly met, and the attenuation in the upper attenuating-band will be met with more than 6 db in hand. We shall not, therefore, have to consider reflection effects in this attenuating-band. The attenuation in the lower attenuating-band does not exceed the requirements by at least 6 db and we shall have to consider the reflection effects in this band.

Let us try terminal impedances which are the derived image impedances of half-sections with $|X_\infty|$ equal to 0·233 and 4·0.

Then $\frac{x_2^2}{|X_\infty|} \doteqdot 0{\cdot}42$, $\frac{x_2^2}{6{\cdot}1} \doteqdot 0{\cdot}28$ and $\frac{x_2^2}{2{\cdot}294} \doteqdot 0{\cdot}74$. Thus with a modified value of $|X_\infty|$ of 0·42, it is found from Fig. 34 that the reflection loss at a modified value of $|X|$ of 0·28 is 1 db, and at a modified value of $|X|$ of 0·74 is $-$ 2·6 db. There will therefore be an additional loss of 2 db ($= 2 \times 1$) to be added to the image attenuation coefficient at $|X| = 6{\cdot}1$, and a loss of 5·2 db ($= 2 \times 2{\cdot}6$) to be subtracted from the image attenuation coefficient at $|X| = 2{\cdot}294$. A few trials will show that the curve of image attenuation coefficient, with $|X_\infty|$ at about 4·0, cannot be shifted to give a curve of insertion-loss which meets our requirements.

The next to try is terminating the filter in constant-$k$ impedances. From Fig. 34, the reflection loss at $|X| = 0{\cdot}28$ is $-$ 2·6 db, and at $|X| = 0{\cdot}74$, $-$ 2·4 db. On doubling these values (i.e., for the two ends of the filter) it will again be found that the insertion-loss requirement will not be met with this termination.

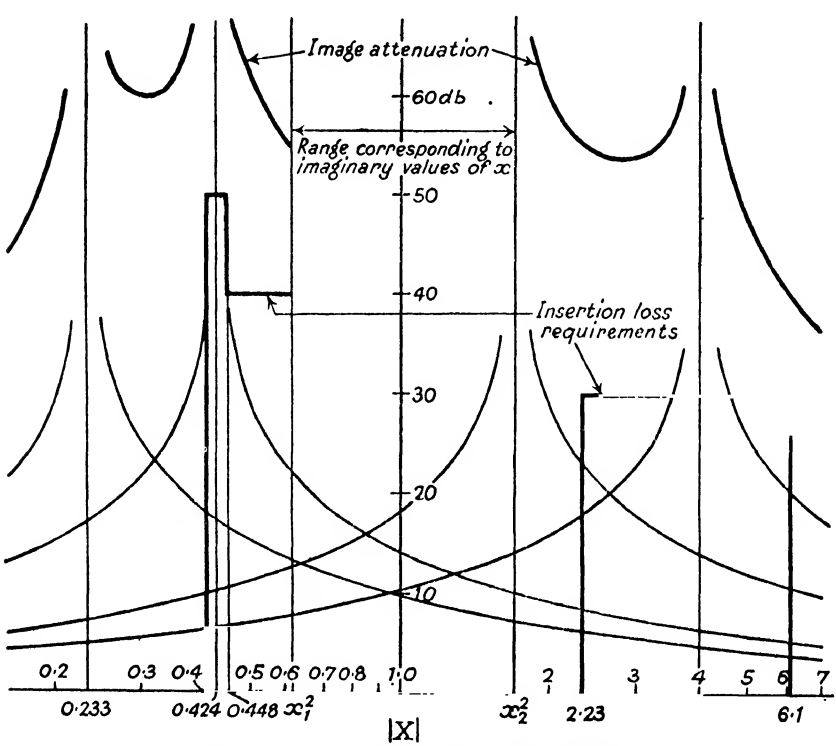


FIG. 43.—Band-pass Filter. First Design.

It is therefore necessary to add another section. The most economical section to add is one with a peak at zero or infinite frequency, corresponding to values of $|X|$ of $x_2^2$ or $x_1^2$ respectively. Let us add one with a peak at $x_2^2$. The total image attenuation now exceeds the design insertion-loss requirement by more than 6 db and there is no need to calculate the reflection-loss factors, unless we want to be able to check the actual measured insertion-loss of the completed filter. The curve for image attenuation is shown in the heavy line in Fig. 43. It will be seen that the image attenuation exceeds the insertion-loss requirements in the lower attenuating-band by at least 8 db, and in the upper attenuating-band by at least 20 db. The requirements in the attenuating-band of the filter are met with a large amount of attenuation in hand. It will often be found that such is the case. Here, however, it is possible to improve on the design. A section having a peak of attenuation at either zero or infinite frequency does so by having a series arm consisting of a capacitor or an inductor alone, or a shunt arm consisting of an inductor or a capacitor alone. A section having a peak of attenuation at any other frequency needs a tuned circuit in either of these two positions. Thus a section having a peak of attenuation at either zero or infinite frequency has fewer elements than does any other section. Hence, if we can design this filter so that the section, which at present has a peak at $|X|$ equal to 0·424, is shifted to $|X|$ equal to 0·59 (i.e., to $x = \infty$), we shall have saved in elements. It will be found that with values of $|X_\infty|$ equal to 0·233, 0·59, 1·69 and 3·33 will meet the attenuating-band requirements. The image attenuation is shown in Fig. 44 in the heavy dotted line, and the heavy full line shows the calculated insertion-loss, assuming that the terminal image impedances have $|X|$ values of 0·233 and 3·33. The fine dotted line and the heavy chain-dotted line show the image phase-shift coefficient of this filter.

By means of the expression

$$|X| = \frac{x_1}{x_2}\left[\frac{x_2^2 - x^2}{x^2 - x_1^2}\right]$$

which is obtained from 14(vii) for a pass-band, equivalent values of $|X|$ for values of $x$ lying between $x_1$ and $x_2$ are calculated, and are given below.

| $x$ . . | 0·8 | 0·856 | 0·88 | 0·9 | 1·0 | 1·088 | 1·13 | 1·19 | 1·25 |
|---|---|---|---|---|---|---|---|---|---|
| $\|X\|$ . | 12·35 | 4·37 | 2·95 | 2·36 | 1·0 | 0·498 | 0·353 | 0·182 | 0·072 |

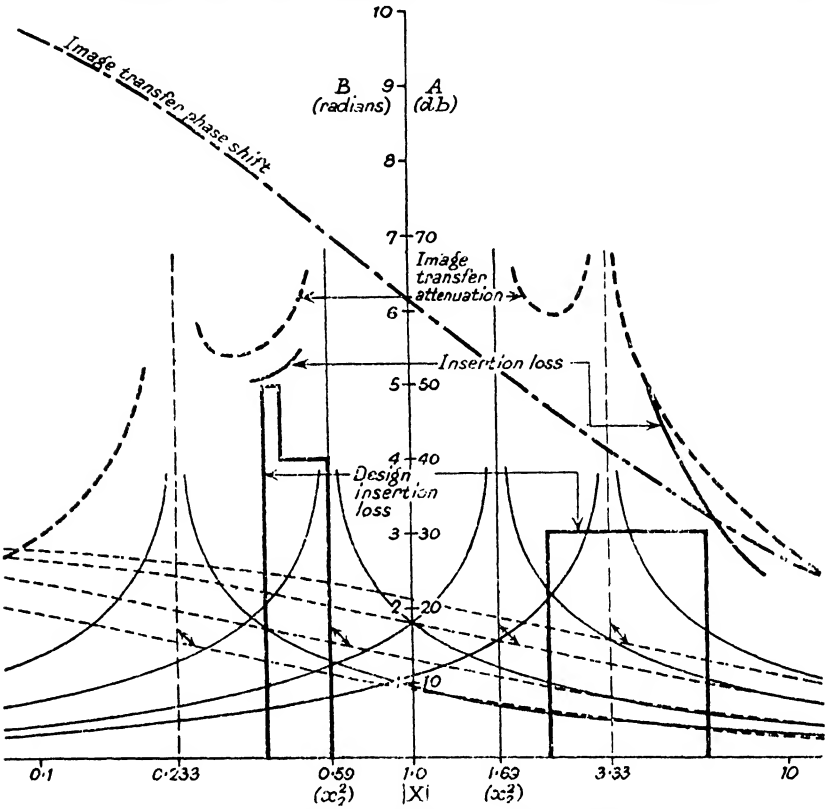


FIG. 44.—Band-pass Filter. Final Design.

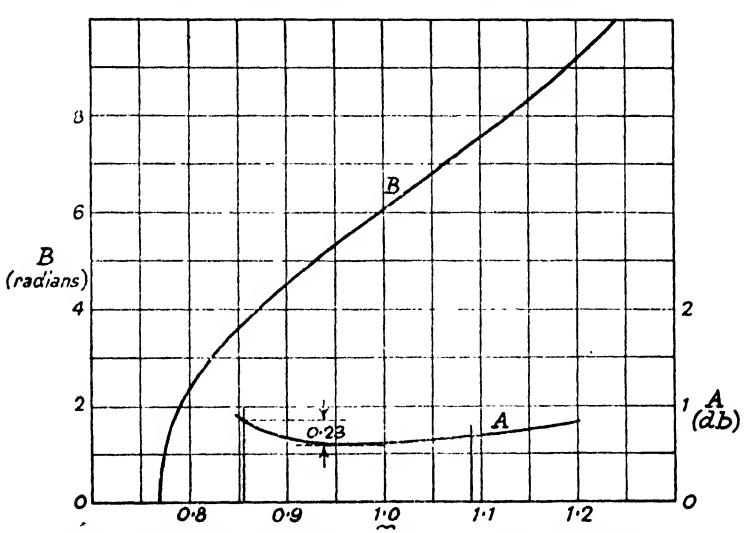


FIG. 45.—Image Phase-shift and Image Attenuation of Band-pass Filter of Fig. 44.

The phase-shift curve is now drawn against a linear scale of $x$. This is shown in Fig. 45. The slope of this curve, i.e., $\frac{\partial B}{\partial x}$, is obtained at a number of points, by drawing tangents to the curve, and the value of $\frac{\partial B}{\partial x}$ so obtained is then used to make an estimate of the effect of dissipation in the pass-band. Let us assume that the capacitors will be perfect (i.e. $Q_C > 1000$), and that the inductors will have similar $Q$'s, being given by

$$Q_L = 100x.$$

This assumes that the $Q$ of each inductor is proportional to the frequency and is equal to 100 at the mid-band frequency. (In this instance, inductors of such a performance were available.) Then the attenuation coefficient in the pass-band is calculated from the expression,

$$A_{\text{db}} \doteqdot 4{\cdot}35x(d_L+d_C)\frac{\partial B_0}{\partial x} \quad . \quad . \quad . \quad 13\text{(iv)}$$

which reduces to

$$A_{\text{db}} \doteqdot 0{\cdot}0435\frac{\partial B_0}{\partial x}\ \text{db}.$$

This curve is also shown in Fig. 45. It will be seen that over the required pass-band the attenuation coefficient changes by 0·23 db. The design requirement is for the insertion-loss to vary by not more than 0·2 db. We may be able to meet this by terminating the filter by resistive loads which match the image impedances of the filter at $x$ equal to 0·856. At this value of $x$ there will be no mis-match or interaction-loss factors, and the insertion-loss will be equal to the attenuation coefficient. At other values of $x$ there will be a mis-match between the terminating impedances and the terminal image impedances, which will make the insertion-loss exceed the attenuation coefficient.

The terminal image impedances are nearly symmetrical, as the two values of $|X_\infty|$ are nearly reciprocals. We may therefore say that $m_1 \doteqdot m_2$ and use the image impedance curves shown in Fig. 33.

When $x$ is equal to 0·856, $|X|$ for a symmetrical band-pass section is equal to 1·88, and when $x$ is equal to 1·089, $|X|$ is equal to 8·67. When $x$ is equal to 1, $|X|$ is equal to $\infty$. Taking a mean value of $x_{1\infty}$ and $\frac{1}{x_{2\infty}}$ as 1·5, the value of $|X_\infty|$ for the symmetrical band-pass section is 0·7. Thus, when $x$ is equal to

0·856, $\frac{Z_{01m}}{R_0} = \frac{R_0}{Z_{02m}} = 0{\cdot}9$ approximately, for which the mis-match loss is of the order of 0·012 db, and for the two ends of the filter, 0·024 db. It will be seen that this is not sufficient to bring the loss to within the required limits, and the $Q$ of the inductors will have to be increased in the ratio of 0·23 : 0·2 (since loss is inversely proportional to $Q$). Thus the coils will have to have $Q$'s which exceed $115x$. As there is no appreciable gain in terminating with other than the design impedance, the filter will be calculated on a design impedance of 600 ohms.

We have now to determine the loss of the filter to a frequency of 68 kc/s (i.e. $x \doteqdot 1{\cdot}546$).

The insertion-loss at this frequency is caused by one whole 4-element section for which $x_1 = 0{\cdot}768$, $x_2 = 1{\cdot}298$ and $x_{2\infty} = 1{\cdot}546$, by the contribution from the other sections of the filter, and by the two terminal mis-matches.

We may calculate the image transfer attenuation at $x_{2\infty}$ from the expressions given in the table on p. 107. Sufficient accuracy will be obtained if we round up our values to $x_1 = 0{\cdot}8$, $x_2 = 1{\cdot}3$ and $x_{2\infty} = 1{\cdot}5$.

Then
$$V = \frac{(x_{2\infty}{}^2 - x_2{}^2)(x_{2\infty}{}^2 - x_1{}^2)}{dx_{2\infty}{}^2(x_2{}^2 - x_1{}^2)}$$
$$\doteqdot \frac{(2{\cdot}3 - 1{\cdot}7)(2{\cdot}3 - 0{\cdot}6)}{2{\cdot}3(1{\cdot}7 - 0{\cdot}6)} \times 100 \times 1{\cdot}5$$
$$\doteqdot 60$$
and
$$A_{\text{db}} \doteqdot 8{\cdot}7 \sinh^{-1} 2 \mid V \mid \doteqdot 8{\cdot}7 \sinh^{-1} 120$$
$$\doteqdot 48 \text{ db.}$$

The contribution from the remaining sections of the filter will be seen to be about 20 db (Fig. 44).

We have decided to terminate the filter at each end with a derived image impedance, for which we have chosen $x_{1\infty} \doteqdot 0{\cdot}5$, $x_{2\infty} \doteqdot 1{\cdot}5$. Thus if the derived image impedances are presented to the generator and to the load, the image impedances at $x_{1\infty}$ and $x_{2\infty}$ will be either both very low, or both very high. (They will not be 0 or $\infty$ because of the dissipation of the components.) Thus there will be a mis-match at each end of the filter, between the generator and load impedances, and the image impedances. Let us assume that series-derived half-sections are used to terminate the filter. (Exactly the same result would be obtained if we considered shunt-derived half-sections.) A rough calculation shows that the inductor which gives a series resonance at $x_2$ has an

inductance of approximately $1{\cdot}3L_k$. Assuming the dissipation factor of this inductor at this frequency to be $d/1{\cdot}5$, where $d = 0{\cdot}01$, the impedance of this series-resonant circuit at resonance (i.e. at $x_{2\infty}$) is equal to $\frac{0{\cdot}01 \times 1{\cdot}3}{1{\cdot}5} \times 1{\cdot}5\ R_0$ or $0{\cdot}013\ R_0$. This is so small as to become the image impedance of the filter at this frequency. The mis-match loss between generator (or load) of internal impedance $R_0$ and this image impedance is equal to

$$20 \log_{10} \frac{R_0 + 0{\cdot}013 R_0}{2\sqrt{[R_0(0{\cdot}013 R_0)]}}$$

$$\doteqdot 20 \log_{10} \frac{1}{2\sqrt{0{\cdot}013}}$$

$$\doteqdot 13 \text{ db}$$

and this occurs at each end of the filter. Thus at $x \doteqdot 1{\cdot}546$ (or 68 kc/s), the insertion-loss is given by

$$(13+48+20+13) \text{ or } 94 \text{ db.}$$

This is well in excess of the 60 db required.

We have now to calculate the element values of the final filter. Let us first, however, decide upon the form of the filter.

It was decided that the complete filter should have values of $|X_\infty|$ of 0·233, 0·59, 1·69 and 3·33. Equivalent values of $x_\infty$ are 1·546, $\infty$, 0 and 0·518. These are obtained from the relationship

$$x = x_1\sqrt{[(X - x_2^2)/(X - x_1^2)]}$$

which is obtained from 14(vii) for an attenuating-band. From the relationship given in 11·3 we may combine these values of $x_\infty$ in pairs to enable us to use the economical 6-element structures. Thus we shall combine into one section the two peaks, $x_{1\infty} = 0$ and $x_{2\infty} = \infty$, which gives a constant-$k$ structure. The two remaining peaks we shall combine into one section, having $x_{1\infty} = 0{\cdot}518$ and $x_{2\infty} = 1{\cdot}546$, which gives a 6-element structure. The two possible forms which can be taken by the filter are shown in diagrammatic form in Fig. 46, (*a*) and (*b*). Let us choose the form of Fig. 46(*a*) for our calculation of element values.

So far we have used a slide-rule for calculation. The calculation of element values must, however, be carried out to a higher degree of accuracy, as during the calculation small differences between large quantities are involved.

We have decided on a mid-band frequency of 44 kc/s. In addition we have chosen $x_1$ as 0·768 and $x_2$ as 1·298. But $x_1$ and $x_2$ must be reciprocals, and our modified values of $x_1$ and $x_2$ we

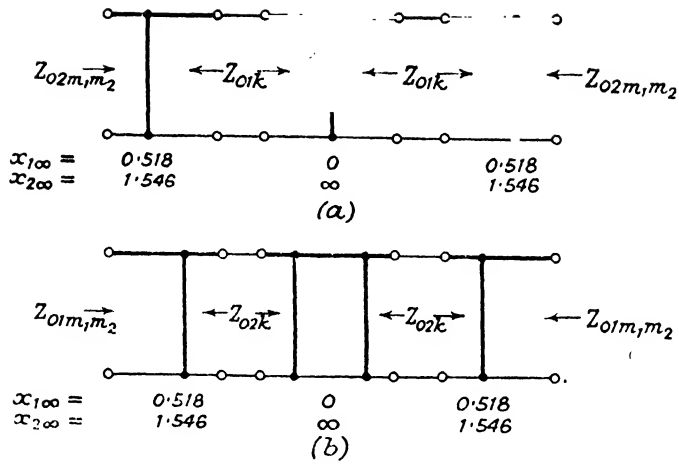


FIG. 46.—Two Possible Assemblies of Band-pass Filter of Fig. 45.

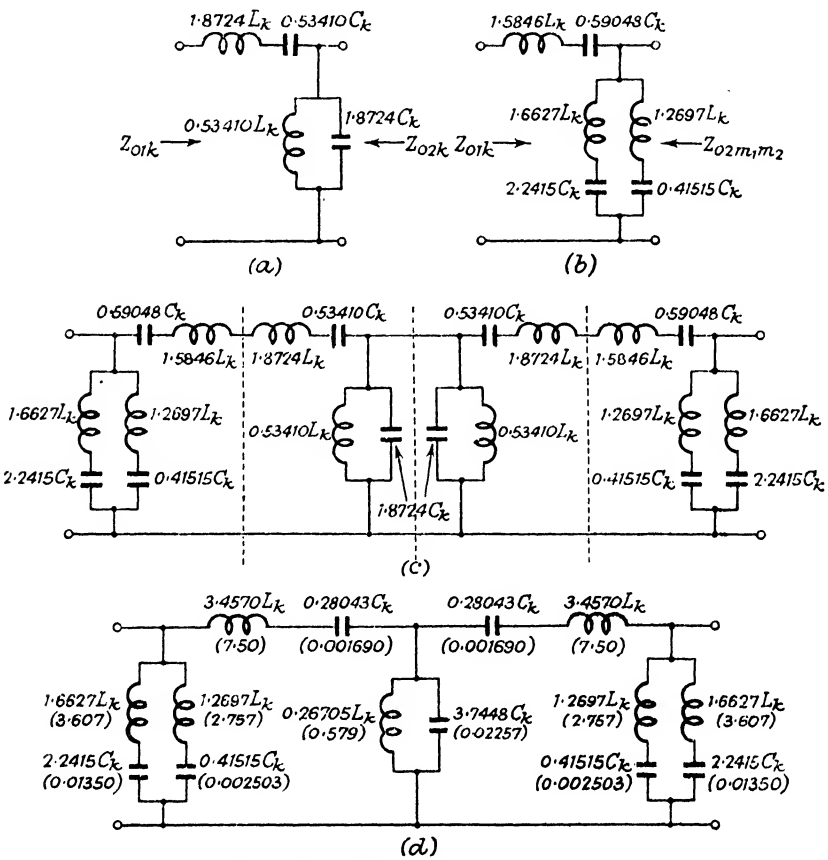


**FIG. 47.—Band-pass Filter of Figs. 44 to 46.**
**Figures in brackets in (*d*) are inductances in *mH* and capacitances in $\mu F$.**

shall choose as 0·76800 and 1·3021. The values of $x_\infty$ are generally not critical, but in our case we have to have a peak of attenuation at 68 kc/s. The modified values of $x_\infty$ are thus 0, 0·51800, 1·5455 and $\infty$. The value of $n$ is given by $x_2 - x_1$, i.e. 0·53410.

Let us calculate first the constant-$k$ half-sections. As will be seen from Fig. 17($b$) the elements of the half-section are $nL_k$, $L_k/n$, $nC_k$ and $C_k/n$. We have already chosen $n$ as 0·53410, and $1/n$ is therefore equal to 1·8724. The constant-$k$ half-section is shown in Fig. 47($a$).

From Fig. 20 we are enabled to calculate the element values of the series-derived half-section having $x_{1\infty}$ equal to 0·51800 and 1·54550. For this half-section

$$
\begin{aligned}
x_1 &= 0{\cdot}76800,\ x_1^2 = 0{\cdot}58982\\
x_2 &= 1{\cdot}3021,\ x_2^2 = 1{\cdot}6957\\
x_{1\infty} &= 0{\cdot}51800,\ x_{1\infty}^2 = 0{\cdot}26832\\
x_{2\infty} &= 1{\cdot}5455,\ x_{2\infty}^2 = 2{\cdot}3887,\ 1/x_{2\infty}^2 = 0{\cdot}41859\\
g &= \sqrt{[(x_1^2 - x_{1\infty}^2)(x_2^2 - x_{1\infty}^2)]}\\
&= \sqrt{[(0{\cdot}58982 - 0{\cdot}26832)(1{\cdot}6957 - 0{\cdot}26832)]}\\
&= \sqrt{[0{\cdot}32150 \times 1{\cdot}4274]}\\
&= 0{\cdot}67744\\
h &= \sqrt{[(x_1^2 - 1/x_{2\infty}^2)(x_2^2 - 1/x_{2\infty}^2)]}\\
&= \sqrt{[(0{\cdot}58982 - 0{\cdot}41859)(1{\cdot}6957 - 0{\cdot}41859)]}\\
&= \sqrt{[0{\cdot}17123 \times 1{\cdot}2771]}\\
&= 0{\cdot}46761\\
g/x_{2\infty}^2 &= 0{\cdot}67744/1{\cdot}5455 = 0{\cdot}28363\\
hx_{1\infty}^2 &= 0{\cdot}46761 \times 0{\cdot}26832 = 0{\cdot}12546\\
x_{1\infty}^2/x_{2\infty}^2 &= 0{\cdot}26832/2{\cdot}3887 = 0{\cdot}11234\\
m_1 &= \frac{g/x_{2\infty}^2+h}{1 - x_{1\infty}^2/x_{2\infty}^2} = \frac{0{\cdot}28363+0{\cdot}46761}{1 - 0{\cdot}11234} = \frac{0{\cdot}75124}{0{\cdot}88766} = 0{\cdot}84633\\
m_1^2 &= 0{\cdot}71628\\
m_1/n &= 0{\cdot}84633/0{\cdot}53410 = 1{\cdot}5846\\
m_2 &= \frac{g+hx_{1\infty}^2}{1 - x_{1\infty}^2/x_{2\infty}^2} = \frac{0{\cdot}67744+0{\cdot}12546}{1 - 0{\cdot}11234} = \frac{0{\cdot}80290}{0{\cdot}88766} = 0{\cdot}90453\\
m_2^2 &= 0{\cdot}81818\\
n/m_2 &= 0{\cdot}53410/0{\cdot}90453 = 0{\cdot}59048\\
a &= (1 - m_1^2)(x_{2\infty}^2 - x_{1\infty}^2)/g\\
&= (1 - 0{\cdot}71628)(2{\cdot}3887 - 0{\cdot}2683)/0{\cdot}67744\\
&= 0{\cdot}28372 \times 2{\cdot}1204/0{\cdot}67744\\
&= 0{\cdot}88773\\
a/n &= 0{\cdot}88773/0{\cdot}53410 = 1{\cdot}6627\\
b &= ax_{1\infty}^2 = 0{\cdot}88773 \times 0{\cdot}26832 = 0{\cdot}23828
\end{aligned}
$$

$$n/b = 0{\cdot}53410/0{\cdot}23828 = 2{\cdot}2415$$
$$d = ag/h = 0{\cdot}88773 \times 0{\cdot}67744/0{\cdot}46761 = 1{\cdot}2865$$
$$n/d = 0{\cdot}53410/1{\cdot}2865 = 0{\cdot}41515$$
$$c = d/x_{2\infty}{}^2 = 1{\cdot}2865/2{\cdot}3887 = 0{\cdot}67811$$
$$c/n = 0{\cdot}67811/0{\cdot}53410 = 1{\cdot}2697.$$

The half-section is shown in Fig. 47(*b*).

Two constant-$k$ half-sections and two $m_1m_2$ half-sections are now connected together as shown in Fig. 47(*c*). It will be seen that at each junction between successive half-sections, the image impedances on either side of each junction are equal. By combining similar elements in the series- and shunt-arms, the final filter is reduced to that shown in Fig. 47(*d*). So far the elements are related to the inductance $L_k$ and the capacitance $C_k$.

From Section 11 it will be seen that

$$L_k = \frac{R_0}{\omega_0}$$
$$C_k = \frac{1}{R_0\omega_0}$$

Here $\omega_0 = 2\pi.44{,}000$ and $R_0 = 600$.

Hence $L_k = 2{\cdot}1704 \times 10^{-3}$ henries $= 2{\cdot}1704$ mH

$C_k = 6{\cdot}0288 \times 10^{-9}$ farads $= 0{\cdot}0060288\ \mu$F

The actual element values of the filter are shown in brackets in Fig. 47(*d*). As the filter is to offer a peak of attenuation to a frequency of 68 kc/s, it would be advisable to make part of the capacitance of the arm giving rise to this peak, from a variable condenser, so that the peak may be located accurately during manufacture.

It may appear from the description of the design of this filter that a band-pass filter is difficult to design. The design could have been made more simple if we had designed to an attenuation coefficient which exceeded the insertion-loss requirement by 6 db, and the final filter would only have had one extra element in it. It obviously depends on the cost of the extra elements compared with the time saved in design whether or not the filter is designed to an insertion-loss (with a possible saving of elements) or to an attenuation coefficient basis (with a certain saving in time). If a large number of filters is to be made to a particular design, or if space or weight is at a premium, it is obviously worth while to spend an extra hour or two on design in order to be sure of obtaining the filter which will meet the requirements with the minimum number of elements. For example, it may be that an attempt to

design the filter we have considered, taking cut-off frequencies closer to the required pass-band, would have been even more economical of elements.

## 16.3. Parallel or Series Connection of Filters.

**16.3.1. Fractional Terminating of Paralleled Filters (Zobel).** Let us consider the design of a pair of filters, whose design impedances have been chosen as 1000 ohms, and whose cut-off angular velocities have already been chosen as 10,000 radians per second for the low-pass filter, and 12,500 radians per second for the high-pass filter. Let us assume that the two filters are to be connected in parallel. We have made sure that one end of each filter has a mid-series constant-$k$ image impedance, and we have designed to an attenuation coefficient equal to the minimum insertion-loss requirement, plus 3 db for the unparalleled end mis-match, and minus 5 db for the paralleled end mis-match. For the phase-shift coefficient curve we have added a half-section with $m$ equal to 0·54 from 15(iii) (for $a = \frac{10,000}{12,500} = 0{\cdot}8$, and $m$ is then equal to 0·54), to the sum of the phase-shift coefficients of the sections going to make up each filter (in the pass-band of each of the filters the parallel filter and the added impedance forms a half-section with $m$ equal to 0·54).

For the low-pass filter

$$L_k = \frac{R_0}{\omega_0} = \frac{1000}{10,000} = 0{\cdot}1 \text{ henry}$$

$$C_k = \frac{1}{R_0\omega_0} = \frac{1}{10^7} = 10^{-7} \text{ farads.}$$

For the high-pass filter

$$L_k = \frac{R_0}{\omega_0} = \frac{1000}{12,500} = 0{\cdot}08 \text{ henry}$$

$$C_k = \frac{1}{R_0\omega_0} = \frac{1}{1{\cdot}25 \times 10^7} = 8 \times 10^{-8} \text{ farads.}$$

Let us also assume that the terminal section at the paralleled end of the low-pass filter is a series-derived section with $m$ equal to 0·7, and the terminal section of the paralleled end of the high-pass filter is a series-derived section with $m$ equal to 0·5. Then the terminal series arm of the low-pass filter will have an inductance of $0{\cdot}7L_k$, i.e. 0·07 henry, and the terminal series arm of the high-pass filter will have a capacitance of $\frac{1}{0{\cdot}5}C_k$, i.e. $1{\cdot}6 \times 10^{-7}$ farads, as shown in Fig. 48($a$).

We now have to add an impedance of 0·54 times the impedance of the constant-$k$ series arm to each filter. The impedance to be added to the low-pass filter is that of an inductor of inductance $0{\cdot}54L_k$, i.e. 0·054 henry, and that to be added to the high-pass

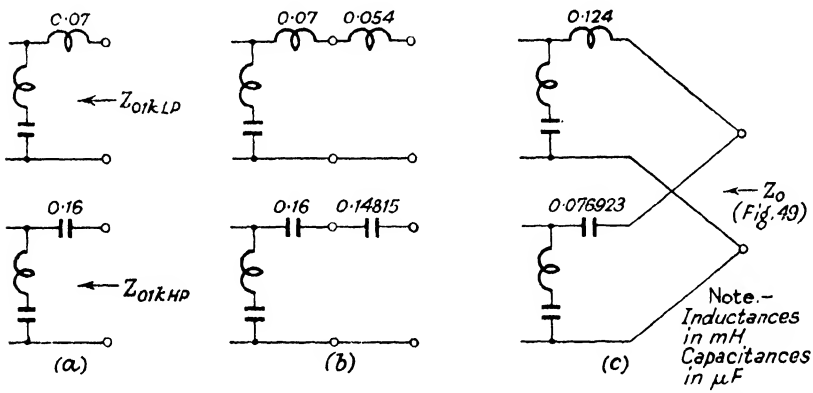


FIG. 48.—Parallel Connection of L.P. and H.P. Filters. (Fractional Terminations.)

filter is that of a capacitor of capacitance $\frac{C_k}{0{\cdot}54}$, i.e. $1{\cdot}4815 \times 10^{-7}$ farads. These are shown in Fig. 48($b$). Combining the similar elements in the two series arms gives the parallel combination shown in Fig. 48($c$). Fig. 49 shows the image impedance of the parallel combination. It will be noticed that it is fairly close to 1000 ohms over the pass-bands of the two filters, the reactive

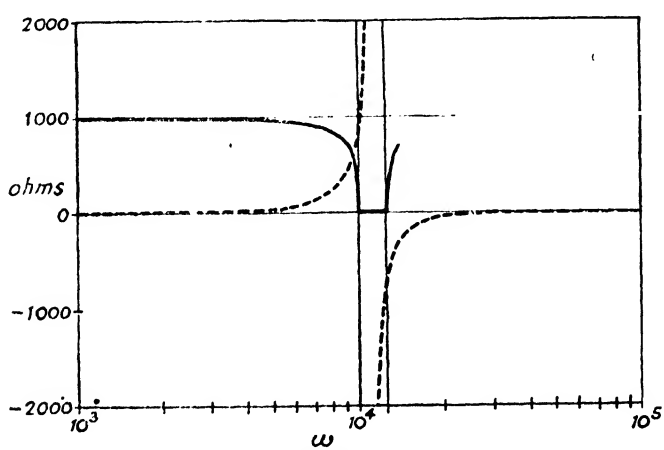


FIG. 49.—Image Impedance of Parallel L.P. and H.P. Filters of Fig. 48 (c). Solid line: resistive component. Dotted line: reactive component.

component being small, and between the two pass-bands it is a pure reactance.

**16.3.2. Impedance Correction applied to Paralleled Filters (Bode).** Let us now see if it is possible to improve on this design Suppose that the low-pass filter has to pass frequencies up to 0·95 of cut-off frequency, and that the high-pass filter has to pass frequencies above $\frac{1}{0{\cdot}95}$ of its cut-off frequency. From Fig. 32 it will be seen that with $m = 0{\cdot}49$, the mid-shunt-derived image impedance varies between 1·0 and $\frac{1}{1{\cdot}2}$ times the design impedance between $|X|$ equal to 0·11 ($x_{LP} = 0{\cdot}95$) and $\infty$ ($x_{LP} = 0$). It will be found that this is the best that can be done with a single derivation for this range of frequencies. Thus we shall choose $m = 0{\cdot}49$, and parallel our filters on this basis. The susceptance of the low-pass filter when an inductor of inductance $0{\cdot}49L_k$ is added in series with a mid-series constant-$k$ image impedance is

$$\frac{-j.0{\cdot}49x}{1-0{\cdot}76x^2} = js_1.$$

The susceptance of the high-pass filter in its attenuating-band, when a capacitor of capacitance $\frac{1}{0{\cdot}49}C_k$ is added in series with its mid-series constant-$k$ image impedance is

$$\frac{j}{\left[\frac{0{\cdot}6}{x}+\sqrt{\left(\frac{1{\cdot}562}{x^2}-1\right)}\right]} = js_2.$$

The susceptance of the two filters is equal to $s_1+s_2$ and will be found to be negative over the majority of the range from $x = 0$ to $x = 0{\cdot}95$.

In Section 15 it was pointed out that the susceptance-annulling network would take the form of a series-resonant circuit, resonating at the geometric mean of the cut-off frequencies of the two filters. This corresponds to a value of $x$ of $\sqrt{1{\cdot}25}$, or 1·118. The admittance of a series-resonant circuit, whose inductor has $l$ times the inductance of the low-pass $L_k$ value, and which resonates at $x = 1{\cdot}118$, is given by

$$\frac{j(1{\cdot}118x)}{l(1{\cdot}25-x^2)} = j\frac{s_3}{l}.$$

The table below gives in condensed form the calculations necessary for determining $l$.

| $x$ | 0 | 0·2 | 0·4 | 0·6 | 0·8 | 0·9 | 0·95 | 1·0 |
|---|---|---|---|---|---|---|---|---|
| $s_1$ . . . | 0 | −0·101 | −0·223 | −0·405 | −0·763 | −1·148 | −1·484 | −2·040 |
| $s_2$ . . . | 0 | 0·109 | 0·224 | 0·354 | 0·513 | 0·613 | 0·673 | 0·741 |
| $s_1+s_2$ . . | 0 | 0·008 | 0·001 | −0·051 | −0·250 | −0·535 | −0·811 | −1·299 |
| $s_3$ . . . | 0 | 0·165 | 0·368 | 0·675 | 1·310 | 2·045 | 2·74 | 4·22 |
| $\left\lvert\frac{s_1+s_2}{s_3}\right\rvert$ . | — | 0·005 | 0·002 | 0·068 | 0·171 | 0·234 | 0·267 | 0·275 |

A few trials, for example by plotting $(s_1+s_2)$ and $s_3$ on logarithmic scales of $x$ and $s$, and moving the $s_3$ scale parallel to the $x$ axis until the best fit is obtained from $x = 0$ to $x = 0{\cdot}95$; or by calculating $\frac{s_3}{l}$ for several values of $l$, show that for $\frac{1}{l} = 0{\cdot}257$ $(l = 3{\cdot}9)$ the best fit between $(s_1+s_2)$ and $\frac{s_3}{l}$ is obtained.

| $x$ | 0 | 0·2 | 0·4 | 0·6 | 0·8 | 0·9 | 0·95 | 1·0 |
|---|---|---|---|---|---|---|---|---|
| $0{\cdot}257s_3$ . . . | 0 | 0·043 | 0·095 | 0·173 | 0·337 | 0·526 | 0·704 | 1·088 |
| $0{\cdot}257s_3+s_1+s_2$ | 0 | 0·051 | 0·096 | 0·122 | 0·087 | −0·009 | −0·107 | −0·211 |

The residual susceptance will be seen to be small over the required range $(0 < x < 0{\cdot}95)$, and if we invert the curve for susceptance about $x = 1{\cdot}118$, and change the sign of $s$, we will obtain the residual susceptance for the high-pass filter pass-band.

The filter pair should be terminated in a resistance of $\frac{1}{\sqrt{1{\cdot}2}}$ times the design impedance of the filters, and the susceptance-annulling network will be a series-resonant circuit, consisting of an inductor of inductance $3{\cdot}9 \times L_{kLP}$ and a capacitor of capacitance $C_{kLP}/(1{\cdot}25 \times 3{\cdot}9)$.

**16.4. Example of Calculation of Insertion-Loss and Phase-Shift.** Let us consider the calculation of the insertion-loss and phase-shift for a low-pass filter, at 0·9 of its cut-off frequency, where the image attenuation is 2 db, the image phase-shift 470°, one end of the filter having a mid-series constant-$k$ image impedance, and the other having a mid-series-derived image impedance with an $m$ value of 0·32, the generator and load being each equal to $R_0$.

From 14(v) the value of $|X|$ corresponding to $x = 0{\cdot}9$ is 0·235.

From Fig. 32 the mid-series constant-$k$ image impedance is $0{\cdot}43 \times R_0$. Setting a pair of dividers at a separation equal to the distance between 1 and 0·43, and transferring to the single-line nomogram, we find that with one point set at 1, and the other at 0·43, a quantity equal to $20 \log_{10} \frac{1+0{\cdot}43}{2\sqrt{0{\cdot}43}}$ db may be read off on the right-hand scale. This corresponds to a value of 0·8 db. Now $r$ is the ratio between $R_0$ and $Z_{01k}$, or between $Z_A$ and $Z_{0A}$, since the generator impedance is equal to $R_0$. Thus the quantity of $20 \log_{10} \frac{1+r}{2\sqrt{r}}$ is equal to

$$20 \log_{10} \left| \frac{Z_A+Z_{0A}}{2\sqrt{(Z_A Z_{0A})}} \right| \text{ db}$$

and is one of the factors of insertion-loss, being equal to the mis-match loss between generator and image impedance. The quantity $\frac{1+r}{2\sqrt{r}}$ is positive, and therefore there is a zero angle associated with it. Opposite the same point, 0·43, we also see the value of a quantity $20 \log_{10} \left| \frac{1+r}{1-r} \right|$ db and this has a value of 8 db. Expanding the expression for this quantity we get

$$20 \log_{10} \left| \frac{Z_A+Z_{0A}}{Z_A - Z_{0A}} \right|$$

which is the db equivalent of part of the interaction-loss factor. Here $Z_{0A} < Z_A$ and a zero angle must be associated with this factor.

Similarly, the mid-series-derived image impedance at $|X| = 0{\cdot}235$ for $m$ equal to 0·32 is equal to $1{\cdot}6R_0$. Again transferring the distance between 1 and 1·6 to the nomogram we read off 0·2 db from the right-hand scale and 13 db from the left-hand scale. The first of these two factors is the mis-match loss between image impedance and load, and the second is one of the components of the interaction loss factor. As in this case, $r > 1$ (i.e. $Z_{0B} > Z_B$) the factor will have a negative sign, i.e. an angle of 180° associated with it.

The interaction-loss factor is given by

$$20 \log_{10} \left| 1 - \frac{Z_A - Z_{0A}}{Z_A+Z_{0A}} \cdot \frac{Z_B - Z_{0B}}{Z_B+Z_{0B}} \exp(-2P) \right| \text{ db.}$$

Expressed in db and degrees, $2P$ is equal to $2 \times 2$ db and $2 \times 470°$, i.e. 4 db and 940°. The two factors which multiply $\exp(-2P)$ contribute $-8 - 13 = -21$ db and 180°. Thus the second term inside the modulus sign has an equivalent value of $-21 - 4 = -25$ db,

and $-940° + 180° = -760°$. This last angle is equal to $(-720°) - 40°$, or $-40°$.

From Fig. 12 we read off the interaction-loss factor as $-0{\cdot}4$ db and the interaction phase-shift factor as $+15°$.

Thus the interaction loss is 2 db contributed by the image attenuation coefficient, plus 0·8 db from the mis-match at the constant-$k$ end of the filter, plus 0·2 db from the mis-match at the derived end of the filter, minus 0·4 db interaction loss, a total of 2·6 db. The interaction phase-shift is equal to 470° from the image phase-shift, no contribution from the mis-matches, and 15° from the interaction phase-shift factor, a total of 485° $(= 360° + 125°)$.

## 17. LATTICE NETWORKS.

Another form of network is known as the *lattice network*. Its most general form is shown in Fig. 50($a$). We shall consider only the symmetrical form shown in Fig. 50($b$). In this symmetrical

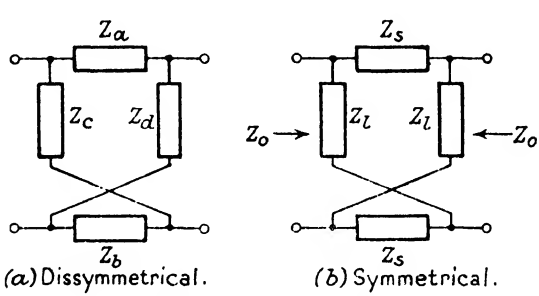


FIG. 50.—Dissymmetrical and Symmetrical Lattice Networks.

form, the two series-arm impedances are each equal to $Z_s$, and the two lattice-arm impedances are each equal to $Z_l$. It is obvious that the series and lattice arms may be interchanged, with the only result that a phase-shift of $\pi$ is introduced between the two

ends of the network. As the network is symmetrical, the two image impedances are equal, and we shall write them as $Z_0$.

From 3(v) we see that

$$Z_0^2 = Z_f Z_c$$

where $Z_f$ and $Z_c$ are the impedances of one end of the network when the other end is open-circuited and short-circuited respectively.

Here we have

$$Z_f = \tfrac{1}{2}(Z_s + Z_l)$$

$$Z_c = 2\frac{Z_s Z_l}{Z_s + Z}$$

whence

$$Z_0^2 = Z_s Z_l \quad . \quad . \quad . \quad . \quad . \quad 17(\text{i})$$

From 3(vi)

$$\tanh^2 P = \frac{Z_c}{Z_f}$$

($P$ is used because the lattice section we are considering is a whole section and not a half-section, as was the case when we were considering the ladder half-section.)

Then

$$\tanh^2 P = 4\frac{Z_s Z_l}{(Z_s + Z_l)^2}.$$

Now

$$\tanh P = \frac{2\tanh\frac{P}{2}}{1 + \tanh^2\frac{P}{2}}$$

and on substituting for tanh $P$ and solving we obtain the following relationship

$$\tanh^2\frac{P}{2} = \frac{Z_s}{Z_l} \text{ or } \frac{Z_l}{Z_s} \quad . \quad . \quad . \quad 17(\text{ii})$$

From 17(i) and 17(ii) we may solve for $Z_s$ and $Z_l$ in terms of $Z_0$ and $P$, and

$$\left.\begin{aligned} Z_s &= Z_0 \tanh\frac{P}{2}\left(\text{or } Z_0 \coth\frac{P}{2}\right) \\ Z_l &= Z_0 \coth\frac{P}{2}\left(\text{or } Z_0 \tanh\frac{P}{2}\right) \end{aligned}\right\} \quad . \quad . \quad 17(\text{iii})$$

Now $Z_s$ and $Z_l$ are the open- and short-circuited impedances of a network with one image impedance $Z_0$ and image transfer coefficient $\frac{P}{2}$, measured at the $Z_0$ end, for

$$Z_s Z_l = Z_0^2$$

and

$$\frac{Z_s}{Z_l} = \tanh^2\frac{P}{2}$$

We may now construct lattice equivalents to all the filter networks we have investigated in Sections 9, 10 and 11.

Take the low-pass series-derived half-section shown in Fig. 13(*a*). At the end with image impedance $Z_{01}$, the open-circuit impedance is that of the series and shunt arms in series, and the short-circuit impedance is that of the series arm alone. Thus the equivalent lattice section to a mid-series-derived low-pass *section* is as shown in Fig. 51(*a*). At the end of the ladder half-section with image impedance $Z_{02m}$ the open-circuited impedance is that of the shunt arm alone, and the short-circuit impedance is that of the series

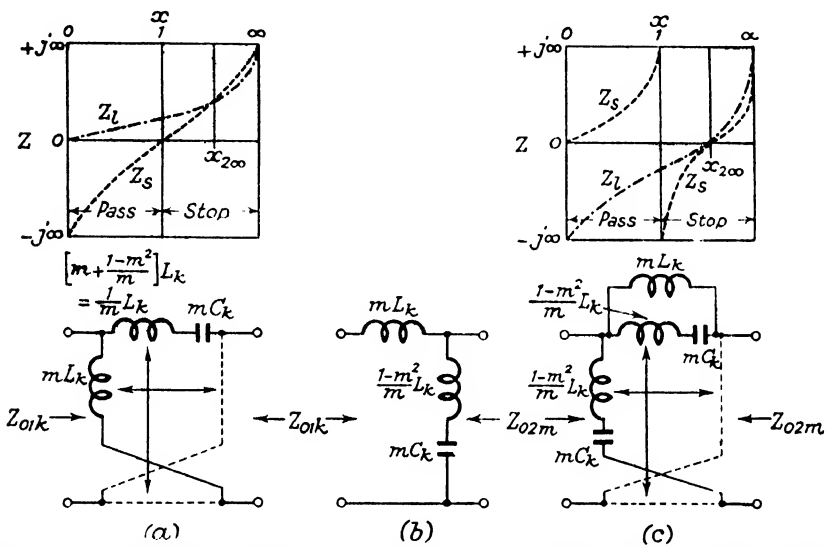


FIG. 51.—Lattice Equivalents of $m$-derived Low-pass Whole Section Ladder Filter.

and shunt arms in parallel. The lattice section equivalent to a mid-shunt-derived low-pass *section* is shown in Fig. 51(*b*). It should be noted that the two lattice equivalent networks have the same image transfer coefficient, i.e. $P$, but one (Fig. 51(*a*)) has a mid-series constant-$k$ image impedance and the other (Fig. 51(*c*)) has a mid-shunt $m$-derived image impedance.

In Section 6, it was pointed out that as one of the elements of an $m$-derived half-section was obtained by multiplying or dividing one of the arms of the parent half-section by $\frac{1-m^2}{m}$, we were restricted to values of $m$ lying between 0 and $+1$ if we were to realize the half-section in practice. If $m$ is unrestricted in positive values, $\frac{1-m^2}{m}$ lies between $\infty$ ($m = 0$) and $-m$ ($m = +\infty$). Now

from Fig. 51($a$), for example, the series arm of the lattice network consists of a capacitance in series with an inductance of value

$$L_k\left(m+\frac{1-m^2}{m}\right)=\frac{1}{m}L_k$$

and whilst $m$ is positive, the inductance is positive, lying between $L_k(m=1)$ and $0(m=+\infty)$. Hence it is possible to construct a lattice filter network having an $m$ value exceeding unity. It will be found that with lattice equivalents of any of the ladder type networks which we have discussed, $m$ values exceeding unity are possible. For such networks, the peaks of attenuation occur at imaginary frequencies. For example, in the case of a low-pass section,

$$x_{2\infty}{}^2=\frac{1}{1-m^2}$$

and when $m>1$, $x_{2\infty}$ is imaginary.

If we stop at this point, leaving us able to develop lattice structures which are equivalent to symmetrical ladder filter structures, we shall miss the most important of the facilities which the lattice type of network gives to us.

Let us refer back to the expression

$$\tanh^2\frac{P}{2}=\frac{Z_s}{Z_l} \quad . \quad . \quad . \quad . \quad 17(\text{ii})$$

If we make $Z_s$ and $Z_l$ from pure reactances, the right-hand side of this expression will always be real. If $Z_s$ and $Z_l$ have the same sign $\tanh^2\frac{P}{2}$ will be positive, and when $Z_s$ and $Z_l$ are of opposite sign, $\tanh^2\frac{P}{2}$ will be negative and $\tanh^2\frac{P}{2}$ is never complex.

Let us now write $P=A+jB$. Then

$$\tanh\frac{P}{2}=\tanh\frac{A+jB}{2}$$

$$=\frac{\tanh\frac{A}{2}+j\tan\frac{B}{2}}{1+j\tanh\frac{A}{2}\tan\frac{B}{2}}$$

$$\frac{\tanh\frac{A}{2}\left(1+\tan^2\frac{B}{2}\right)+j\tan\frac{B}{2}\left(1-\tanh^2\frac{A}{2}\right)}{1+\tanh^2\frac{A}{2}\tan^2\frac{B}{2}}$$

Thus, when $Z_s$ and $Z_l$ have the same sign, $\tanh^2 \frac{P}{2}$ is positive and $\tanh \frac{P}{2}$ is real. Hence

$$\left.\begin{aligned} &\tan \frac{B}{2} = 0, \ B = n\pi \\ \text{and} \quad &\tanh \frac{P}{2} = \tanh \frac{A}{2} \end{aligned}\right\} \quad . \quad . \quad . \quad 17(\text{iv})$$

This is an attenuating-band.

When $Z_s$ and $Z_l$ have opposite signs, $\tanh^2 \frac{P}{2}$ is negative and $\tanh \frac{P}{2}$ is imaginary. Hence

$$\left.\begin{aligned} &\tanh \frac{A}{2} = 0, \ A = 0 \\ \text{and} \quad &-\mathrm{j} \tanh \frac{P}{2} = \tan \frac{B}{2} \end{aligned}\right\} \quad . \quad . \quad . \quad 17(\text{v})$$

This is a pass-band.

There is a general theorem, generally known as Foster's Reactance Theorem, which states that any two-terminal network, composed only of pure reactances, has an impedance given by

$$Z = \frac{H(\omega_1^2 - \omega^2)(\omega_3^2 - \omega^2) \ . \ . \ . \ (\omega_{2n-1}^2 - \omega^2)}{j\omega(\omega_2^2 - \omega^2)(\omega_4^2 - \omega^2) \ . \ . \ . \ (\omega_{2n-2}^2 - \omega^2)} \ . \quad 17(\text{vi})$$

where $H$ is a positive constant, $n$ is an integer, and

$$0 \leqslant \omega_1 \leqslant \omega_2 \leqslant \ . \ . \ . \ \leqslant \omega_{2n-2} \leqslant \omega_{2n-1} \leqslant \infty.$$

As the network is composed of pure reactances, its impedance must also be purely reactive, and we may write

$$Z = jz$$

where $z$ is a pure number. Substituting in (vi) for $Z$ we have

$$z = \frac{-H(\omega_1^2 - \omega^2)(\omega_3^2 - \omega^2) \ . \ . \ . \ (\omega_{2n-1}^2 - \omega^2)}{\omega(\omega_2^2 - \omega^2)(\omega_4^2 - \omega^2) \ . \ . \ . \ (\omega_{2n-2}^2 - \omega^2)} \ . \quad 17(\text{vi}a)$$

When $\omega$ is equal to $\omega_1$, $\omega_3$, . . . or $\omega_{2n-1}$, the impedance $Z$ is zero, and when $\omega$ is equal to $\omega_2$, $\omega_4$, . . . or $\omega_{2n-2}$, the impedance $Z$ is infinite. An analysis of (vi$a$) will show that when $\omega_{2m-2} < \omega < \omega_{2m-1}$, where $m$ is an integer less than $n$, $z$ is negative, and when $\omega_{2m-1} < \omega < \omega_{2m}$, $z$ is positive. From this it may be shown that $\frac{\partial z}{\partial \omega}$ is positive.

$\omega_1$, $\omega_3$, . . . and $\omega_{2n-1}$ are values of $\omega$ for which $Z$ is said to

have "*zeros*", and $\omega_2$, $\omega_4$, . . . and $\omega_{2n-2}$ are values of $\omega$ for which $Z$ is said to have "*poles*".

We have already seen (17(iv)) that in an attenuating-band $Z_s$ and $Z_l$ are of the same sign. Thus, in an attenuating-band poles of $Z_s$ must occur with poles of $Z_l$, and zeros of $Z_s$ with zeros of $Z_l$. Also, as $\tanh \infty = 1$, peaks of attenuation coefficient will occur when $Z_s$ and $Z_l$ are equal.

In a pass-band (17(v)) $Z_s$ and $Z_l$ are of opposite sign, and poles of $Z_s$ must occur with zeros of $Z_l$, and zeros of $Z_s$ with poles of $Z_l$.

In order to get from one condition to the other, a pole or a zero of $Z_s$ (or $Z_l$) must occur with no pole or zero of $Z_l$ (or $Z_s$). Such a condition gives a cut-off point.

Let us now consider the result of these conditions somewhat more fully.

Consider the poles and zeros of $Z_s$ and $Z_l$ about a cut-off point $\omega_1$. In the attenuating-band let $Z_s$ have poles at $\omega_a$ and $\omega_c$, and a zero at $\omega_b$. Then $Z_l$ will also have poles at $\omega_a$ and $\omega_c$, and a zero at $\omega_b$. In the pass-band let $Z_s$ have a pole at $\omega_\beta$ and zeros at $\omega_\alpha$ and $\omega_\gamma$. Then $Z_l$ will have a zero at $\omega_\beta$ and poles at $\omega_\alpha$ and $\omega_\gamma$. Between $\omega_c$ and $\omega_\alpha$ let $Z_l$ have a zero at $\omega_1$.* Then $Z_s$ will be given by

$$Z_s = \frac{H_s(\ .\ .\ .\ )(\omega_b^2 - \omega^2)(\omega_\alpha^2 - \omega^2)(\omega_\gamma^2 - \omega^2)(\ .\ .\ .\ )}{j\omega\,(\ .\ .\ .\ )(\omega_a^2 - \omega^2)(\omega_c^2 - \omega^2)(\omega_\beta^2 - \omega^2)(\ .\ .\ .\ )}$$

and $Z_l$ will be given by

$$Z_l = \frac{H_l(\ .\ .\ .\ )(\omega_b^2 - \omega^2)(\omega_1^2 - \omega^2)(\omega_\beta^2 - \omega^2)(\ .\ .\ .\ )}{j\omega\,(\ .\ .\ .\ )(\omega_a^2 - \omega^2)(\omega_c^2 - \omega^2)(\omega_\alpha^2 - \omega^2)(\omega_\gamma^2 - \omega^2)(\ .\ .\ .\ )}$$

Then $Z_0$ will be given by

$$\left.\begin{aligned} Z_0^2 &= \frac{-H_l H_s(\ .\ .\ .\ )^2(\omega_b^2 - \omega^2)^2(\omega_1^2 - \omega^2)(\ .\ .\ .\ )}{\omega^2(\ .\ .\ .\ )^2(\omega_a^2 - \omega^2)^2(\omega_c^2 - \omega^2)^2(\ .\ .\ .\ )} \\ \text{and } P \text{ will be given by} \\ \tanh^2\frac{P}{2} &= \frac{H_s(\ .\ .\ .\ )^2(\omega_\alpha^2 - \omega^2)^2(\omega_\gamma^2 - \omega^2)^2(\ .\ .\ .\ )}{H_l(\ .\ .\ .\ )^2(\omega_1^2 - \omega^2)\,(\omega_\beta^2 - \omega^2)^2(\ .\ .\ .\ )} \end{aligned}\right\} \quad . \quad 17(\text{vii})$$

The surprising result is that the image impedance depends on the positions of the poles and zeros occurring in the attenuating-bands, and the image-transfer coefficient depends on the positions of the poles and zeros which occur in the pass-bands. It follows that we may therefore consider the image impedance requirement quite separately from the image-transfer coefficient requirement,

* $\omega_a < \omega_b < \omega_c < \omega_1 < \omega_\alpha < \omega_\beta < \omega_\gamma$.

and vice versa. Our freedom in design is thus greater than it was in the case of the ladder-filter.

**17.1. Cauer Lattice Filters.** It was this flexibility which made it possible for Cauer to develop his method of filter design. His method of design enables one to produce a filter whose image impedance over a certain band of frequencies lies between $\frac{R_0}{1+\delta}$ and $R_0(1+\delta)$, and whose image-attenuation coefficient over a different band of frequencies exceeds a minimum attenuation of $A_{min.}$, without the trial-and-error methods of curve tracing described in the sections dealing with ladder-type filters.

Cauer uses what are known as Tschebyscheff approximations to derive suitable expressions for $Z_0$ and $\tanh\frac{P}{2}$, from which $Z_s$ and $Z_l$ may be obtained by multiplication and division. The actual forms of the arms of the lattice network are then calculated from the impedance functions $Z_s$ and $Z_l$ by means of partial fractions. The method is described at some length by A. T. Starr, *Electric Circuits and Wave Filters*, and by E. A. Guillemin, *Communication Networks*, Vol. II.

If a quantity $\theta$ lies between $\frac{1}{1+\Delta}$ and $1+\Delta$, R.P. $\tanh^{-1}\theta$ exceeds $\frac{1}{2}\log_e\frac{2+\Delta}{\Delta}$. Writing $P$ as $A+jB$, and $\tanh\frac{P}{2}=y$, then if

$$\frac{1}{1+\Delta} < y < 1+\Delta,$$

$$\text{R.P. } \tanh^{-1} y > \frac{1}{2}\log_e\frac{2+\Delta}{\Delta}.$$

But
$$\tanh^{-1} y = \frac{P}{2} = \frac{A+jB}{2}$$

and
$$\text{R.P. } \tanh^{-1} y = \frac{A}{2}.$$

Hence
$$\frac{A}{2} > \frac{1}{2}\log_e\frac{2+\Delta}{\Delta}$$

and
$$A_{min.} = \log_e\frac{2+\Delta}{\Delta}$$

or
$$\Delta = \frac{2}{\exp(A_{min.}) - 1}.$$

Thus we have to discover functions, one of which has a value

$$\frac{R_0}{1+\delta} < Z_0 < R_0(1+\delta)$$

over the required " pass-band ", and the other which has a value of

$$\frac{1}{1+\dfrac{2}{\exp(A_{min.})-1}} < \theta < 1+\frac{2}{\exp(A_{min.})-1}$$

over the required " attenuating-band ".

If we divide through the impedance requirement by $R_0$, it will be seen that both of the requirements to be met are of the form

$$\frac{1}{1+\Delta} < U < 1+\Delta,$$

$\Delta$ being equal to $\delta$ in the impedance case, and $\dfrac{2}{\exp(A_{min.})-1}$ in the attenuation case, and $U$ being equal to $Z_0/R_0$ and $\theta$ in the respective cases, the specified requirements holding over exclusive limited ranges of frequency. It is to such a problem that the Tschebyscheff approximations give an answer.

If we write $\lambda = jx$, where $x = \omega/\omega_1$ in 17(vii), we get

$$Z_0^2 = \frac{-H_l H_s(\ldots)^2(b^2+\lambda^2)^2(1+\lambda^2)(\ldots)}{-\lambda^2(\ldots)^2(a^2+\lambda^2)^2(c^2-\lambda^2)^2(\ldots)}$$

where $a = \omega_a/\omega_1$, etc.

For a simple filter with only one cut-off, this is of the form

$$U = \frac{\sqrt{(1+\lambda^2)}.(b^2+\lambda^2)(d^2+\lambda^2)\ \ldots}{\lambda(a^2+\lambda^2)(c^2+\lambda^2)\ \ldots}$$

and by a suitable choice of a function for $\lambda$, any impedance- and image-transfer coefficient- symmetrical filter may be put in this form. As we make $U$ more complicated, by adding on factors of the form $(n^2+\lambda^2)$, so we can approximate more and more closely to a constant value for $U$. Successively more complicated forms for $U$ are

1. $$U_{\mathrm{i}} = \frac{\sqrt{(1+\lambda^2)}}{\lambda}$$

2. $$U_{\mathrm{ii}} = \frac{\lambda\sqrt{(1+\lambda^2)}}{(a^2+\lambda^2)}$$

3. $$U_{\mathrm{iii}} = \frac{\sqrt{(1+\lambda^2)}.(b^2+\lambda^2)}{\lambda(a^2+\lambda^2)}$$

4. $$U_{\mathrm{iv}} = \frac{\lambda\sqrt{(1+\lambda^2)}.(b^2+\lambda^2)}{(a^2+\lambda^2)(c^2+\lambda^2)}$$

and so on, where $1 < a < b < c < \ldots$

For a range $1/k \leqslant \lambda < \infty$, $k \geqslant 1$ a suitable choice of parameters $a$, $b$, $c$, $d$, etc., will make $\dfrac{1}{1+\Delta} < U < 1+\Delta$, where $\Delta$ is a function of $k$. The relationships are given below *

* Based on a table (Table 18B, p. 391) in *Electric Circuits and Wave Filters*, A. T. Starr, by permission of Messrs. Sir Isaac Pitman & Sons, Ltd.

| Class | $a$ | $b$ | $c$ | $\sqrt{[1-(1+\Delta)^{-4}]}$ |
|---|---|---|---|---|
| 1 . . . . . | — | — | — | $ak$ |
| 2 . . . . . | $sn(K/2)$ | — | — | $a^4k^2$ |
| 3 . . . . . | $sn(2K/3)$ | $sn(K/3)$ | — | $b^4k^3$ |
| 4 . . . . . | $sn(3K/4)$ | $sn(2K/4)$ | $sn(K/4)$ | $a^4c^4k^4$ |

where

$$K = \int_0^{\pi/2} \frac{d\theta}{\sqrt{(1 - k^2 \sin^2 \theta)}}$$

and $sn(K/2)$, etc., are elliptic functions. In the form given above, $a$, $b$, $c$, etc., and $\Delta$ are difficult to determine and it is more useful to have the constants $a$, $b$, $c$, etc., and the corresponding values of $\Delta$ for the class set out graphically. A. T. Starr has provided this (in *Electric Circuits and Wave Filters*), in the form of a line chart.

The Cauer method of filter design has been dealt with in a very sketchy manner, as the method is not considered to be as flexible as the ladder network methods described in earlier sections. The Cauer method suffers from the following disadvantages :—

(*a*) In its most simple form, (low-pass or high-pass filters), the image impedance will lie between the specified limits from 0 (or $\infty$) to $k$ $\left(\text{or } \frac{1}{k}\right)$, and the image attenuation coefficient will exceed the minimum requirement from $\infty$ (or 0) to $\frac{1}{k}$ (or $k$).

(*b*) When the specified limits do not extend to either 0 or $\infty$, the work involved increases.

(*c*) In the case of band-pass filters, it is only possible to design impedance- and image attenuation-symmetrical networks.

(*d*) As designed, the filter is in lattice form, which involves the use of very accurately adjusted components, and it is not always possible to reduce the lattice form to a ladder form.

In the author's opinion, it is not worth while using Cauer's method unless the restrictions mentioned in (*a*) to (*d*) above do not apply, and unless it is essential to be able to reduce the number of elements in the filter to its absolute minimum value. Where speed is important, and the attenuation requirements are not too stringent, it is probably more economical to carry out the design as described in the earlier sections of this book. It may be of interest to point out that conventional ladder-type filters have been designed and made in which, for a low- or high-pass filter, the

insertion-loss exceeded 110 db. over a band of frequencies of about 2 : 1, and deviated from a low constant value over the required pass range by not more than $\pm 0{\cdot}8$ db., the adjacent pass and attenuating ranges having a frequency ratio of 1 : 1·2.

**17.2. Crystal Filters.** The main use of the lattice network is in the design of crystal filters.*

When a suitably cut crystal, generally of quartz, has two of its faces covered with conducting films, forming the terminals of a two-terminal network, it is found to simulate an electrical circuit,

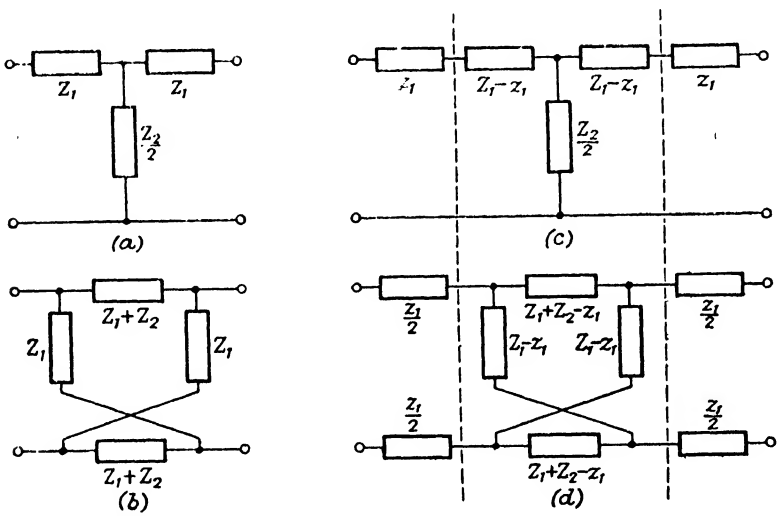


FIG. 52.—Formation of "Reduced" Lattice Network. Extraction of Series Impedance.

consisting of a series-connected inductor and capacitor, in parallel with a capacitor, with very low dissipation coefficients, $10^{-4}$ being a not uncommon upper value. Owing to the relationships between the components of the equivalent electrical elements, the crystal on its own is restricted to very narrow band-pass filters, which can be opened out by the addition of series inductors. As these will have to be of conventional construction, the $Q$ of the elements will be reduced from 10,000 ($= 1/10^{-4}$) to a very much lower value. In a lattice form of construction, this effect may be reduced to a very great extent, with a consequent improvement in the performance of the filter.

* For a very full description of crystal filters, and similar networks, see *Electro-mechanical Transducers and Wave-filters*, Mason, Van Nostrand Company, Inc.

If a symmetrical $T$-network were split into two equal $L$-networks, it was shown that the lattice network equivalent to the $T$-network had series-arms of impedance equal to the sum of the impedances of the series- and shunt-arms of one of the $L$-networks, and lattice-arms of impedance equal to the impedance of the series-arm of the $L$-network. Thus if the $L$-networks have series-arms $Z_1$, and shunt-arms $Z_2$, the equivalent lattice network will have series-arms $Z_1+Z_2$ and lattice-arms $Z_1$. If from the original $T$-network we take a portion $z_1$ of each of the series-arms, and put them outside the network, as shown in Fig. 52 (*c*) and (*d*), we have not altered the performance of the network in any way. The new $T$-network has series-arms $(Z_1 - z_1)$ and the $L$-networks will have series-arms $(Z_1 - z_1)$ and shunt-arms $Z_2$. The equivalent lattice of the "reduced" $T$-network will thus have series-arms of $Z_1 - z_1+Z_2$ and lattice-arms of $Z_1 - z_1$. The network equivalent to the original $T$-network is obtained by adding impedances $z_1$ to the outside of the "reduced" lattice as shown in Fig. 52(*d*). In practice, of course, the impedances external to the lattice network would be split and divided between the two legs of the circuit, as the lattice network is a balanced structure.

From Fig. 52 (*b*) and (*d*) it will be seen that we are able to subtract an equal impedance from each of the series- and lattice-arms of a lattice network and put these impedances outside the lattice portion of the network, without affecting the performance of the complete network in any way.

In the design of crystal filters, both the series- and lattice-arms will be found to possess an impedance in common, this being part of the impedance of the inductance which has to be added to the crystal elements in order to widen the pass-band. This common impedance may therefore be brought outside the lattice structure, and with it may be brought the resistance of the inductors which is common to the series- and lattice-arms. These resistances, which appear as series resistances at the four terminals of the network, may, by the addition of suitable values of shunt resistance, be converted to constant resistance, constant attenuation pads, and the lattice network has had part of its dissipative components removed from it. The effect is to increase the loss of the network away from a cut-off frequency, but this loss remains constant almost up to the cut-off frequency, at which point impedance mismatch effects between the image impedances of the lattice network and the generator and load impedances become of importance.

In a similar way it may be shown that a common shunt-admit-

tance may be subtracted from each of the arms of a lattice network and placed across the input and output terminals of the " reduced " lattice network, without affecting the properties of the complete network.

Fig. 53 * shows the measured insertion loss of a crystal filter consisting of two sections of lattice structure, of such a form that the added inductors, external to the crystals, in both series- and lattice-arms are all equal, thereby allowing them to be placed

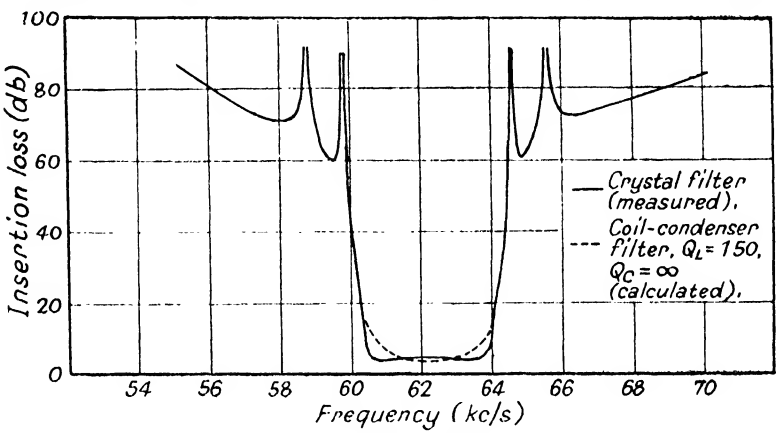


FIG. 53.—Insertion-loss of Crystal Filter of Fig. 54, compared in Pass-band with Calculated Insertion-loss of Similar Coil-condenser Filter.

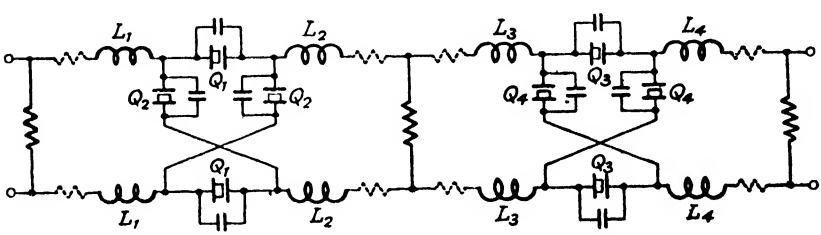


FIG. 54.—Circuit of Crystal Filter of Fig. 53.

$Q$ represents crystal unit. Dotted resistors are resistances of inductors. Crystal units with the same suffix may be combined into one crystal unit and inductors with the same suffix may be wound on a common core.

outside the lattice network. The circuit of the filter is shown in Fig. 54, the dotted resistors in the series-arms being the resistances of the inductors. It will be seen that, with the additional shunt resistors, these form constant-resistance attenuating pads, and the dissipative resistors have thereby been removed from the filter proper. The curve, shown dotted in Fig. 53, is the calculated

* *P.O.E.E.J.*, Vol. 31, p. 263, Jan. 1939. (Full line curve.)

curve of insertion-loss of a similar filter made with inductors and capacitors, the former having $Q$'s of 150. The advantage of using crystals as filter elements is thus very great for this particular filter. In general, where a constant low loss is desired with a high loss at a very near frequency, crystal filters will be found to give a better performance than will a conventional inductor-capacitor filter.

**17.3. Insertion Characteristics of Lattice-type Filter Networks.** Where a lattice or symmetrical network is used, the calculation of its insertion-loss between generator and load of equal impedances can be expressed in a more simple form than that given by 8(iv).* By symmetrical network is meant one which has equal image impedances at its two ends, and does not depend on the internal construction of the network.

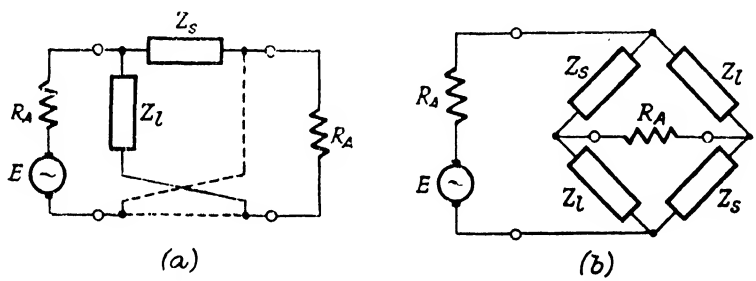


FIG. 55.—Lattice Network drawn as a Bridge.

Fig. 55($a$) shows a lattice network connected between generator and load, each of impedance $R_A$. Fig. 55($b$) is an alternative form of this network, and is seen to be a Wheatstone bridge network which was considered in some detail in Sections 2.2 and 2.3.

From Fig. 3, it will be seen that

$$E_1 = E$$
$$Z_2 = Z_5 = Z_s$$
$$Z_3 = Z_4 = Z_l$$
$$Z_1 = Z_6 = R_A$$

The current into $Z_6$ was given by

$$I_3 = \frac{-E_1(Z_3Z_4 - Z_2Z_5)}{\Delta}$$

* *P.O.E.E.J.*, Vol. 35, pp. 88–92, 111–14. "Calculation of Insertion-loss and Phase-change of 4-Terminal Reactance Networks", Stanesby, Broad & Corke.

where $$\Delta = \begin{vmatrix} Z_1 & (Z_4+Z_5) & -Z_4 \\ Z_3 & -(Z_3+Z_5) & -Z_6 \\ Z_2 & -(Z_2+Z_4) & (Z_2+Z_4+Z_6) \end{vmatrix}$$

and this may be rewritten to suit Fig. 48(*b*) as

$$I = \frac{-E(Z_l^2 - Z_s^2)}{\Delta}$$

where $$\Delta = \begin{vmatrix} R_A & (Z_s+Z_l) & -Z_l \\ Z_l & -(Z_s+Z_l) & -R_A \\ Z_s & -(Z_s+Z_l) & (Z_s+Z_l+R_A) \end{vmatrix}$$

which on adding row 1 to rows 2 and 3 reduces to

$$\Delta = \begin{vmatrix} R_A & (Z_s+Z_l) & -Z_l \\ (R_A+Z_l) & 0 & -(R_A+Z_l) \\ (R_A+Z_s) & 0 & (R_A+Z_s) \end{vmatrix}$$

$$= -2(Z_s+Z_l)[(R_A+Z_l)(R_A+Z_s)]$$

and $$I = \frac{E(Z_l - Z_s)}{2(R_A+Z_l)(R_A+Z_s)}.$$

If the generator were connected direct to the load, a current of $E/2R_A$ would flow in the latter, and the insertion coefficient is given by $[E/2R_A] \div I$, or

$$\frac{(R_A+Z_l)(R_A+Z_s)}{R_A(Z_l - Z_s)}.$$

If the filter network is made of pure reactances, we may write $Z_l = jz_l$ and $Z_s = jz_s$, where $z_l$ and $z_s$ are real. Then the insertion coefficient is given by

$$\frac{(R_A+jz_l)(R_A+jz_s)}{R_A j(z_l - z_s)}$$

and the insertion-loss is equal to 20 times the logarithm of the modulus of this function, and the insertion phase-shift is equal to the argument of this function. Dividing throughout by $R_A$, these reduce to

$$A'_{\text{db}} = 20 \log_{10} \left| \frac{(1+jz_l/R_A)(1+jz_s/R_A)}{j(z_l/R_A - z_s/R_A)} \right|$$

$$= 20 \log_{10} \frac{\sqrt{[(1+z_l^2/R_A^2)(1+z_s^2/R_A^2)]}}{z_l/R_A \sim z_s/R_A}$$

$$B' = \arg \frac{(1+jz_l/R_A)(1+jz_s/R_A)}{j(z_l/R_A - z_s/R_A)}$$

$$= \tan^{-1} \frac{\dfrac{z_l}{R_A} \cdot \dfrac{z_s}{R_A} - 1}{\dfrac{z_l}{R_A} - \dfrac{z_s}{R_A}}$$

and if we write $\theta = \tan^{-1} z_s/R_A$

$$\phi = \tan^{-1} z_l/R_A$$

it can be shown that

$$\left.\begin{aligned} A'_{\text{db}} &= 20 \log_{10} \operatorname{cosec} (\phi \sim \theta) \\ B' &= \theta+\phi+(2n+1)\frac{\pi}{2} \end{aligned}\right\} \quad . \quad . \quad . \quad 17(\text{viii})$$

where $n$ is an integer.

A slide-rule has been designed, and is described in the article from which this method has been extracted, which enables both $A'_{\text{db}}$ and $B'$ to be read off in two operations when $z_l/R_A$ and $z_s/R_A$ are known for any one frequency.

We may use this method of calculating the insertion-loss of symmetrical filters to design a filter to conform with specified requirements, by choosing a tentative design, as explained in Section 16 and calculating the series- and lattice-arms of a tentative lattice section. Calculation from 17(viii) gives the insertion-loss. The series- or lattice-arms may then be modified slightly, and 17(viii) recalculated to improve the performance of the filter. According to the stringency of the design, one or more successive attempts may be necessary to obtain a network which possesses the required characteristics. As modification to the series- or lattice-arms may displace their poles or zeros, it will be noticed that the poles (or zeros) of the series-arm will not coincide with the zeros (or poles) of the lattice-arm for the pass-band, nor will the poles (or zeros) of the series-arm coincide with the poles (or zeros) of the lattice-arms in the attenuating-bands. Thus there will exist small attenuating-bands in the pass-bands, and small pass-bands in the attenuating-bands. These will, however, be masked by the reflection losses or gains, and the result will be a network having "insertion" pass-bands and "insertion" attenuating-bands which are continuous throughout the separate bands.

This method has been used for filters which are to pass frequencies very close to the cut-off frequencies and which are to attenuate heavily frequencies very close to the cut-off frequencies. The work involved is very heavy unless a calculating machine is available. It should also be pointed out that the design of such a filter involves a great deal of computing, whatever the method used for design, and it is probable that this method is more suitable than most others.

## 18. PRACTICAL CONSIDERATIONS IN FILTER CONSTRUCTION.

In the construction of a filter which has been designed to give a certain insertion-loss and phase-shift, a number of points must be considered.

We have so far assumed that it is possible to construct a network which corresponds exactly with the designed (" paper ") network. This is not possible in practice, and the various differences between the performances of the " paper " network and of the actual network must now be analysed, so that we may allow for them, or reduce them to such small values that they have no sensible effect on the performance of the network.

In Section 13 we have considered the effect of dissipation on the performance of a filter, and we have seen how to take this effect into account during design.

It has also been assumed that there is no capacitance associated with an inductor, nor inductance with a capacitor. This assumption is not true, and these deviations from perfection will be considered when discussing the filter components later in this Section.

There remains another assumption—that there is no interaction between the various components of a filter. In actual fact, every component in a filter has some undesirable effect on every other component, and it is therefore necessary to consider how these effects may be reduced. The interactions between two components may be due to the difference in potential between them (capacitive) or to the current in one component giving rise to an induced e.m.f. in the other (inductive).

For example, the potential difference between the two terminals of a generator may, by capacitive coupling, give rise to a potential difference across the two terminals of the load, even when the filter network has been removed. Thus, if the attenuation of the filter network were infinite at a particular frequency, the insertion-loss at that frequency would not be infinite, owing to the capacitive coupling between generator and load. Similarly, an inductive coupling between generator and load would give rise to a like effect.

In the same way, capacitive and inductive couplings must be

reduced inside the filter network, or it may be found that a section, which produces at one frequency a high image attenuation, is bypassed by the undesirable coupling and the final image attenuation of the filter reduced from its design value. But it is not only direct couplings that must be reduced, for it is also possible for indirect couplings to give rise to trouble. For example, we could interpose a metallic screen between two components. This could be of such a size and shape as to reduce the direct capacitance between the two components to an extremely low value. But the capacitance from the screen to each of the two components could be of considerable value, and if the screen were not earthed, it would also have a capacitance to earth. Thus between the two components, *a* and *b*, would be a T-network, the series arms being composed of the capacitances between *a* and the screen, and *b* and the screen, and the shunt arm being the capacitance between the screen and earth. Now each of the components *a* and *b* will have impedances to earth, and consequently there will be formed two circuit meshes, *a*—screen—earth—*a*, *b*—screen—earth—*b*, with a mutual impedance of the impedance of the capacitance between screen and earth. Hence if there exists a potential difference between *a* and earth, a potential difference will be produced between *b* and earth. Thus a screen does not necessarily eliminate capacitive couplings between any two components unless the screen is connected to a suitable point in the circuit. Exactly the same effect can be produced by mounting metal-cased components on a metal baseboard or panel, but insulated from it and leaving the panel free. In such a case we must look for a point in the circuit to which we may connect the panel without introducing any of these bad effects. In the unbalanced filter (see **18.2**) it is generally advisable to connect the panel to the earthy side of the circuit, and to connect the metal-cased components to the panel, unless it is found to be necessary to go to the extreme limits of double screening described in **18.5**.

A similar argument may be used with inductive couplings. Here a component carrying a current has associated with it a magnetic field, and this may be limited in volume by enclosing the component completely in a sufficiently thick metal screen. If the screen is thick enough to reduce the interaction between two such components, it is still possible for an intermediate metal body, generally only if of a magnetizable material, to act as a carrier of the interference between the two components. The most effective remedies are to separate the components from the common path, or to increase the thickness of the screens surrounding the components.

At very low frequencies the capacitive effect is generally small, and only very simple methods are necessary to reduce the effects to a low value. The inductive screening possible with any type screen decreases as the frequency is decreased, and consequently the inductive coupling will become more pronounced as the frequency decreases. Thus, very generally, capacitive couplings are more important at high frequencies, and inductive couplings at low frequencies, and with medium frequencies, say from 5 to 100 kc/s, both will have to be considered.

We have now to consider whether a filter should be balanced or unbalanced, and what components should be used and how they should be adjusted and assembled.

**18.1. Balanced Filters.** If the insertion-loss of a filter is not to exceed, say, 60db at a low frequency, say 30–60 kc/s, there is no great disadvantage in building a filter in a balanced form. In general, however, it is safer to build in an unbalanced form, with transformers at each end that is to be connected to an external balanced circuit.

The disadvantage in using a balanced form of construction is that the insertion-loss of the filter is limited by the unbalance to earth of the various filter components, the generator and the load. Consider, for example, the network shown in Fig. 56(*a*). The filter is a single balanced T section, having equal image impedances $Z_{01}$ and an infinite image transfer attenuation. The filter is perfectly balanced, the opposite series-arms being equal. The generator and load have impedances to earth of $z_1$, $z_2$ for the former, and $z_3$, $z_4$ for the latter. The circuit may be redrawn as Fig. 56(*b*). It will be seen to consist of two Wheatstone bridges $p$ and $q$. The current leaving bridge $p$ and entering bridge $q$ is proportional to

$$\left(z_1\frac{Z_{01}}{2} - z_2\frac{Z_{01}}{2}\right) \text{ (see Section 2.2).}$$

The current leaving bridge $q$ and entering the load is proportional to

$$\left(z_3\frac{Z_{01}}{2} - z_4\frac{Z_{01}}{2}\right).$$

Thus the current entering the load is proportional to

$$\left(\frac{Z_{01}}{2}\right)^2(z_1 - z_2)(z_3 - z_4)$$

and is only zero if $z_1 = z_2$, or $z_3 = z_4$, i.e. if either generator or load is balanced to earth. But as the insertion-loss of a network

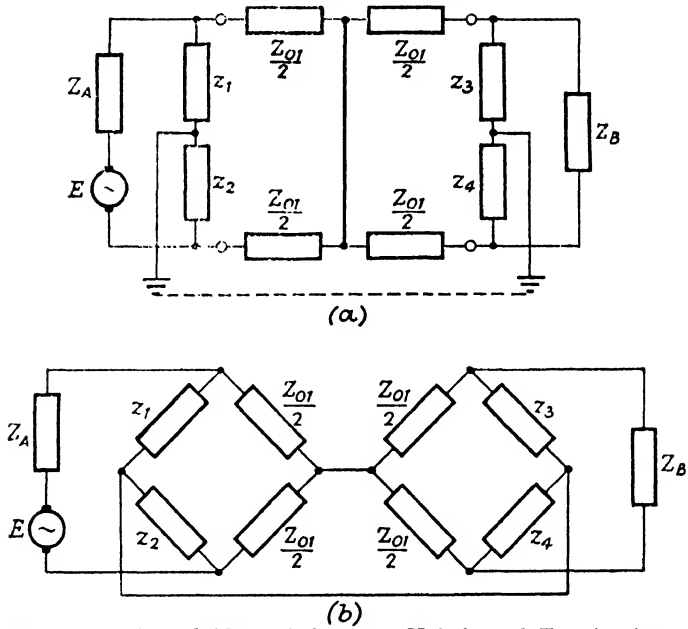


FIG. 56.—Balanced Network between Unbalanced Terminations.

is equal to the mis-match losses at each end, plus an interaction loss, plus the image transfer attenuation, the network we have been measuring should have had an infinite insertion-loss.

The effect of unbalance in the filter itself is still further to increase the error, and it will be found that there is an upper limit to the attenuation that can be introduced between a particular combination of generator and load.

The use of an unbalanced structure increases the ease with which the designed insertion-loss of a filter may be realized, although certain precautions have to be taken.

**18.2. Unbalanced Filters.** When we were considering the unbalanced form of network, it was drawn in the manner shown in Fig. 57(*a*). $E$, $Z_A$ is the generator, $Z_B$ is the load and $I_1$, $I_2$ and $I_3$ are the Maxwell circulating currents in the three meshes. It was assumed that the impedances were concentrated in the rectangles, the lines joining them being connections of zero impedance. In practice, however, the network is as shown in Fig. 57(*b*). Here $r_1$, $r_2$ and $r_3$ denote the impedances of the nominally zero impedance connections in the lower arm of the network, $z_1$, $z_2$, $z_3$ and $z_4$ denote the impedances to earth of the generator and load. As a result of these extra impedances, a current of $I_E$ flows in the mesh earth—$z_2$—$r_1$—$r_2$—$r_3$—$z_4$—earth, and $I_1$, $I_2$ and $I_3$ are modified

by this fourth cyclic current. If the whole network is offering a high impedance to the current applied by the generator, $I_1 \gg I_3$, and the current flowing in the "earth" mesh is produced largely by the p.d. across $r_1$, which is of value $I_1 r_1$. Then the current in the "earth" mesh, $I_E$, is approximately equal to

$$\frac{I_1 r_1}{z_2+r_2+r_3+z_4} \doteqdot \frac{I_1 r_1}{z_2+z_4},$$

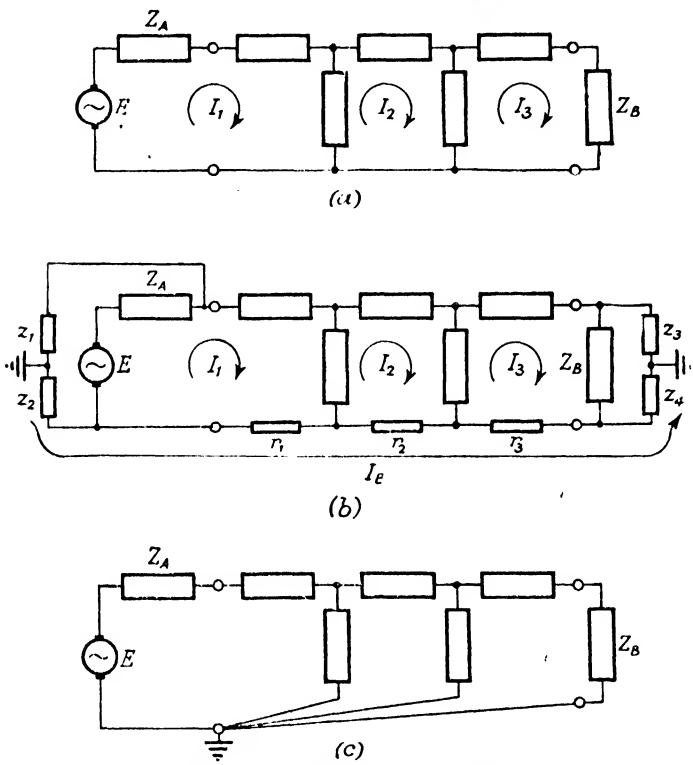


FIG. 57.—Unbalanced Filter showing Earth Connections.

if we neglect $r_2$ and $r_3$ in comparison with $z_2$ and $z_4$, which we may do as the former are the impedances of short lengths of wire and the latter are the earth impedances associated with the generator and load, and are high. Thus in mesh 3 there is introduced an e.m.f. of value given approximately by

$$\frac{I_1 r_1 r_3}{z_2+z_4}$$

giving rise to a mesh current of approximately

$$\frac{I_1 r_1 r_3}{z_1+z_4}\left[\frac{1}{\text{self-impedance of mesh 3}}\right].$$

This may easily be of the same order as the original mesh current $I_3$, and the full insertion-loss, therefore, may not be realized.

The situation is, however, generally worse than this. There is also a fifth mesh to be considered, this including $z_1$ and $z_3$, and a similar effect may arise.

It is usual to connect the earthy ends of an unbalanced circuit to earth. If only the generator is so connected, $z_2$ is short-circuited, and the "earth" current $I_E$ is thus increased. The effect of $z_1$ is, however, eliminated. If, in addition, the earthy end of the load is connected to earth, $z_4$ is also short-circuited and $I_E$ is still further increased.

An improvement may be effected by connecting the lower ends of all components to earth at *one* point, as shown in Fig. 57(*c*), and the impedances, $r_1$, $r_2$ and $r_3$, may then be absorbed into the shunt-arms.

If the generator, network and load are separated by some distance, this method of wiring is not directly applicable. The network itself should, however, be connected so that all the earthy ends of the shunt elements are joined by separate leads to one point, and to this point should be connected the earthy ends of both input and output leads to the network. The earth should be connected to the earthy side of the whole circuit at one point only, and it will probably be found that the earth point of the network is the best place for the connection of this earth lead.

In order to reduce pick-up from stray fields (e.g. radio transmitters working at frequencies near those being transmitted through the network) the whole network should be enclosed in a complete metal screen which is joined to the earthy side of the network. As the earth lead may be connected to the complete circuit at another point, the metal screen should be insulated from earth. The wiring between generator and load should be carried out in coaxial cable which is insulated from earth, and both generator and load should be completely screened, and the screens of each of these units (which are insulated from earth) are connected to the earthy sides of the units. Such a circuit construction will assist greatly in enabling a high (design) insertion-loss to be obtained in practice.

It will be noticed that the whole circuit is completely screened, and is of coaxial form throughout. At high frequencies this form of construction offers great advantages. In a coaxial cable, for example, the loop impedance is a minimum for current flowing on the outside of the inner conductor in one direction, and on the

inside of the outer conductor in the opposite direction. If an alternative path is provided, of low self-impedance, which would be expected to short-circuit part of the outer, or central conductor, it will be found to have very little effect on the distribution of current, as any *loop* circuit including this alternative circuit will have a much higher total impedance than the total loop impedance of the coaxial circuit. An extensive review of this subject, with many examples, is given in an article entitled "Some Aspects of Crosstalk between Unbalanced Circuits," H. Stanesby and E. W. Ayers, *P.O.E.E.J.*, April, 1943.

The complete, screened circuit is shown in Fig. 58(*a*). $z_2$, $z_4$ and $z_6$ represent the impedances to earth of the three screened units, the generator, the load and the network, respectively.

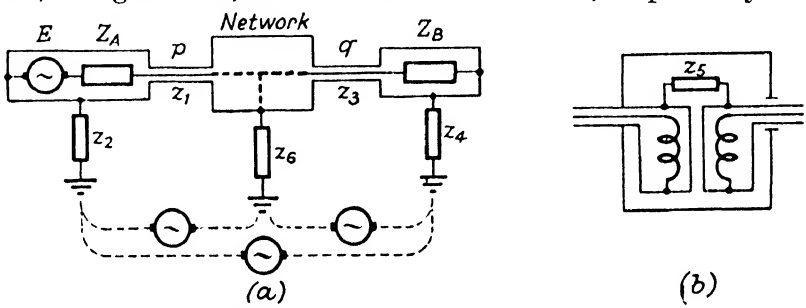


FIG. 58.—(*a*) Coaxial Circuit.
(*b*) Double-screened Transformer.

Currents or p.d.'s may be induced on the outside of the outer conductor or screens, by any external fields, but these should not be able to affect the inner circuit owing to the high attenuation offered by the outer conductor to current flowing perpendicularly to it. The currents flowing in the screen may be high compared with the current into the load when the network introduces a high insertion-loss, the magnitude of the current being affected by the impedances $z_2$, $z_4$ and $z_6$, and $z_1$ and $z_3$, these two latter being the impedances of the screens of the outer conductors of the coaxial leads to external currents.

If the screening effect of the outer conductor is not perfect (and this is true at the lower frequencies), this current flowing on the outsides of the outer conductors will give rise to smaller currents on the insides of the outer conductors, which in turn will give rise to loop currents in the various components of the circuit. Thus interfering low frequencies may be picked up across the load impedance $Z_B$. It is also possible that there exist noise p.d.'s between the three earth points shown in Fig. 58(*a*). These are

denoted by dotted generators connected between the three earths. These can give rise to currents on the outside of the screens and outer conductors which, due to imperfect screening, may be introduced into the internal loop circuits.

These ill-effects may be reduced by two methods. One is to insert double-screened transformers between each pair of large units, which will have relatively low impedances to earth, when compared with the impedance to earth of the coaxial cable used to connect the units together. Such a transformer is shown in Fig. 58(*b*). $z_s$ represents the impedance between the two screens, due in the main to the capacitance between them. If such a transformer is placed in the circuit at $p$, the impedance through which the outer interfering currents flow is increased by the inter-screen impedance $z_s$ of the double-screened transformer. If double-screened transformers are inserted into the circuit at $p$ and $q$, it may be found that the generator, network and load may each be connected to a separate earth, without the interfering noise voltage across the load being made too high. As the interfering noise increases in frequency, $z_s$ decreases, and the current in the outside of the screens increases. The screening effect of the outer conductor and screens increases and offsets this increase in current. From the screen to the high potential end of the transformer windings there exists a capacitance, whose impedance decreases with a rise in frequency, and through this path the noise current on the outside of the screens has access to the inner conductor and thence through the load to the outer conductor and earth. This effect becomes more pronounced at the higher frequencies. Thus the double-screened transformer has its chief use at the lower frequencies.

The second method is the use of a coaxial choke coil. This is constructed by winding a length of coaxial cable on to a laminated magnetic core. The impedance offered to a loop current flowing along the centre conductor and returning by the outer conductor is small and is practically equal to the impedance offered by the same length of coaxial cable straight. There is, of course, the admittance between the inner and outer conductors, which acts as a shunt across the circuit. To a current flowing in the sheath, or in the inner conductor alone, the impedance offered by the choke is high. Thus, as these longitudinal currents are those which may cause interference between the ends of a circuit, or introduce noise from two earth points, the high impedance offered by the choke acts so as to reduce the magnitude of these interfering effects.

Strictly speaking, the image impedance of the circuit at the point at which a coaxial choke is to be introduced, should be equal to the image impedance of the coaxial cable from which the choke coil has been constructed. In practice, however, this is not essential as long as the length of coaxial cable from which the choke coil is constructed is small in comparison with the wavelength of the highest frequency for that cable. The wavelength $\lambda$ is given by

$$\lambda = \frac{3 \times 10^{10}}{kf} \text{ cm.}$$

where $k$ is the dielectric constant of the material between the inner and outer conductors and $f$ is the frequency in cycles per second. If the length of coaxial cable used is less than $\frac{\lambda}{8}$, the effect of the coaxial choke coil may be ignored for any of the normal values of image impedance which will be met in practice. The image impedances of various types of coaxial cable lie between 40 ohms and 100 ohms, and using circuit image impedance of about 75 ohms, the length of coaxial cable may be increased considerably above the length $\frac{\lambda}{8}$.

**18.3. Components.** Other than piezo-electric crystal and electro-mechanical elements, the components used in filter construction are condensers and inductors.

**18.3.1. Capacitors.** The cheapest form of capacitor is the paper capacitor. The dielectric is wax-impregnated paper, the paper acting as a carrier of the wax and as a separator between the plates, which are usually of metal foil. By a suitable construction, the self-inductance of a paper capacitor can be kept low, so that its capacitance remains sensibly constant up to some 100 kc/s. Such capacitors can be clamped between heavy metal plates, thus stabilizing their capacitance values. It is not advisable to use clamped paper capacitors where the accuracy of capacitance is to be better than $\pm 1\%$. 2% is a more usual manufacturing and working tolerance. The dissipation factor of a good paper capacitor may be as low as 0·002 at audio frequencies, the dissipation factor increasing with frequency.

One of a number of forms of mica dielectric capacitor may be used for capacitors of lower dielectric loss than those quoted above for paper capacitors. The two chief forms of mica capacitor are clamped mica capacitors and silvered mica capacitors.

The clamped mica capacitor consists of interleaved mica sheets and metal foils, assembled in wax and compressed whilst hot between the clamps. Capacitances up to 1$\mu$F are not too expensive, and manufacturing tolerances of $\pm \frac{1}{2}\%$ are quite possible. The dissipation factor may be as low as 0·0003, this value holding up to some 300 to 1000 kc/s. The temperature coefficient of capacitance may be kept low (of the order of 0·02% per degree C.) and the stability is high.

Silvered mica capacitors are made by painting or printing silver coatings on to the two sides of mica sheets, the silver after firing becoming attached intimately to the mica. The stability is good, and clamping is unnecessary. As the silver forming the plates is discontinuous the dissipation factor may be found to be somewhat higher at low frequencies and high frequencies than in the clamped mica construction.

**18.3.2. Inductors.** It is essential that the inductors used in constructing a filter are so designed that there is no coupling between them or to any external circuit. In practice this means that the external field of any inductor used should be small. We are able to ensure this either by the use of a suitable form of construction or by screening. If the inductor has a large external field and is then screened, currents will be induced in the material of the screen having the effect of increasing the $I^2R$ loss of the inductor, and reducing its inductance. We are thus forced into using a form of construction which gives rise to a small external field, or using very large screens. Even if an inductor having a very small external field is used it is advisable to screen it as it may have undesirable capacitances to other parts of the circuit. Three types of inductor may be used. They are air-cored, laminated-cored and dust-cored.

**18.3.2.1. Air-cored Inductors.** These have no magnetic material within their field. The solenoid, consisting of a number of turns of wire wound on a cylinder, has a very large external field, and therefore has little use in filter construction. The toroid is a more useful form, for by careful construction the external field is negligible, and close screening is possible. This enables a filter to be constructed in a reasonably compact form.

The toroid consists of a former in the shape of a ring, the conductor being wound uniformly around the ring. If the cross-sectional area of the ring is $A$ sq. cm. and $D$ is its mean diameter, the inductance of a single layer winding of $N$ turns is approximately

$\frac{4N^2A}{D} \times 10^{-9}$ henries. If the winding is multi-layered, $A$ should be taken as the mean area of winding. The inductor should be sectionalized, equal numbers of turns being wound on equal portions of the ring, and the sections connected together so that the potential difference between the ends of each section and the adjacent sections is a minimum. This cuts down the self-capacitance of the inductor.

Any air-cored inductor may be considered as being composed of an inductance in series with a resistance, in parallel with a capacitance and a resistance in parallel. The inductance is known as the true or d.c. inductance of the inductor, the series resistance is the conductor resistance, the capacitance is the self-capacitance and the shunt resistance is the measure of the dielectric loss in the dielectric separating the successive turns of the conductor. If $L_0$ is the true inductance, and $C_0$ the self-capacitance, the inductance at a frequency $f$, equal to $x/2\pi\sqrt{L_0C_0}$ is given by

$$L = L_0[1 - x^2]^{-1}.$$

The series resistance of the inductor, when the latter is expressed as an inductance in series with a resistance, is increased by a factor $[1 - 2x^2]^{-1}$, and it is not advisable to work to a value of $x$ exceeding, say, 0·3. Thus, as the inductance is increased, or the frequency rises, it is important to reduce the self-capacitance of an inductor, and as suggested above, this may be done by sectionalizing the winding.

The resistance offered by a conductor to an alternating current depends on the frequency of the current, the diameter of the conductor and the resistivity of the material of the conductor. It is also influenced by the presence of other conductors carrying alternating currents of the same frequency. The effect is to increase the resistance as frequency increases and as the diameter of the conductor increases. The increase is a function of frequency, diameter of strand, resistivity and shape of inductor. The effect may be reduced by reducing the diameter of the conductor by stranding and twisting, each strand being insulated from its neighbours. A uniform stranding should be used in making up the composite conductor, so that each of the strands is of the same length, and each shares the available cross-section of the composite conductor, being as frequently in the outer layers of the latter as in the inside. One such form of conductor make-up is known as Litz wire. The insulation of the separate strands may be enamel, and the composite conductor should be insulated with a high-

grade insulator, such as pure silk, or some cellulose silk. As the latter is hygroscopic, such inductors should be vacuum-dried and impregnated with a low dielectric capacity low-loss material, for example, distrene, or the whole inductor should be hermetically sealed in its screening can.

It can be shown that the resistance $R$ of an inductor of inductance $L$ can be expressed as a power series in frequency, $f$, and neglecting powers of $f$ higher than the second (this is generally a justifiable assumption),

$$R = L(K+kf^2) \quad . \quad . \quad . \quad . \quad 18(i)$$

Where $K$ is the D.C. resistance factor for the wire used, and $k$ is a wire eddy current factor, the eddy current losses may be considered as a resistive load on a winding coupled inductively to the coil and so capable of being represented as shunt-connected resistor invariable with frequency, or alternatively, as a series resistance varying proportional to frequency squared.

$K$ is a factor obtained from two component factors, the one, $\lambda_1$, being the space factor of the wire, being the ratio of conductor cross-sectional area to total wire area, and the other, $\lambda_2$, which is a space factor of the winding, being the ratio of wire cross-sectional area to the total winding area. $K$ is proportional to $1/(\lambda_1\lambda_2)$.

$k$ depends on the cross-sectional area of the separate strands of the conductor, and on the closeness with which the strands are packed. It is proportional to $d^2\lambda_1\lambda_2$, where $d$ is the diameter of the strands.

If $A_w$ is the cross-sectional area of winding, $d$ the diameter of the strands without insulation, $n$ the number of strands to the conductor and $D$ is the overall diameter of the conductor, and $N$ is the number of turns in the winding,

$$\lambda_1 = nd^2/D^2$$

$$\lambda_2 = \frac{N\pi D^2}{4A_w}$$

From 18(i), it may be shown that

$$Q = \frac{\omega L}{R}$$

$$= \frac{2\pi f}{K+kf^2} \quad . \quad . \quad . \quad . \quad 18(ii)$$

and is independent of $L$.

Differentiating 18(ii) with respect to $f$, and equating to zero, the value of $f$ for $Q$ to be a maximum is given by

$$f_0 = \sqrt{\frac{K}{k}} \quad . \quad . \quad . \quad . \quad . \quad 18(\text{iii})$$

and the maximum value of $Q$ is given by

$$\hat{Q} = \frac{\pi}{\sqrt{Kk}} \quad . \quad . \quad . \quad . \quad . \quad 18(\text{iv})$$

If we substitute for $\hat{Q}$ and $f_0$ in 18(ii),

$$Q = \hat{Q}\frac{\sqrt{Kk}}{\pi}\cdot\frac{2\pi f}{K+kf^2}$$

$$= \hat{Q}\sqrt{Kk}\,\frac{2\left(\frac{f}{f_0^2}\right)}{\left(\frac{K}{f_0^2}\right)+k\left(\frac{f}{f_0}\right)^2}$$

$$\left.\begin{aligned} &\frac{2\,\hat{Q}}{y+\frac{1}{y}} \\ \text{where} \qquad &y = f/f_0 \end{aligned}\right\} \quad . \quad . \quad . \quad . \quad . \quad 18(\text{v})$$

The curve of the function $\dfrac{2}{y+\frac{1}{y}}$ is thus universal for all air-cored inductors. When plotted on a log-log paper, it will be seen to consist of a straight line, of unit slope, when $y < 1$, which turns so as to be parallel to the $y$ axis and equal to 1 when $y$ is equal to 1, and then running off into a straight line of negative unity slope when $y > 1$. It is symmetrical about the line $y = 1$.

Thus the $Q$-curve of an air-cored inductor may be determined by the use of the two parameters, $f_0$ and $\hat{Q}$, and the curve $\dfrac{2}{y+1/y}$. For geometrically similar inductors, $f_0$ is inversely proportional to, and $\hat{Q}$ is directly proportional to, the square root of the linear dimensions.

For a particular core shape, $\lambda_1$ and $\lambda_2$ may be calculated from the dimensions of the core and the available winding space, and with a sample winding $K$ may be calculated by measuring the inductance and the D.C. resistance. As will be seen from 18(i), $K$ is the ratio of D.C. resistance to inductance, $f$ being zero. The value of $K$ for any other type of wire can then be determined, remembering that $K \propto 1/(\lambda_1\lambda_2)$. $k$ may be determined by means

of a sample winding, the resistance being measured at two frequencies and $k$ calculated from the measurements. The value of $k$ for any other type of wire can be determined by remembering that $k \propto d^2\lambda_1\lambda_2$.

For example, an air-cored inductor, wound on a toroidal former, of internal diameter of 2 cm., external diameter of 4 cm., and axial length of 2·5 cm., wound in six sections and fitting into a $7 \times 7 \times 3{\cdot}75$ cm. copper screening can, was found to have the following coefficients for a stranded wire with $\lambda_1\lambda_2 = 0{\cdot}2$, and 46 S.W.G. stranding:

$$K = 2200 \text{ ohm-henry}^{-1}$$
$$k = 6 \times 10^{-8} \text{ ohm-henry}^{-1} \text{ (cycles per sec.)}^{-1}$$

The maximum $Q$ is then 240, and the frequency at which $Q$ is a maximum is 220 kc/s, and the self-capacitance is about 7 $\mu\mu$F.

An air-cored inductor, of very similar shape, fitting into a screening can $11{\cdot}5 \times 11{\cdot}5 \times 6$ cm., is approximately 1·65 the linear size of the inductor we have just seen. Thus the maximum $Q$ would be expected to be $240 \times \sqrt{1{\cdot}65}$, i.e. 310, and the frequency of maximum $Q$ $220 \div \sqrt{1{\cdot}65} = 170$ kc/s. For the same space factors and 46 S.W.G. stranding, $K$ is 1700, $k$ is $5{\cdot}5 \times 10^{-8}$, and $\hat{Q}$ is 335 at $f_0$ of 170 kc/s.

In the case of this second inductor, the $Q$ at 10 kc/s will be about 42, and at lower frequencies will be proportional to the frequency. Thus if an air-cored inductor must be used, the size must be increased as the frequency of maximum $Q$ is decreased. For example, to attain a $Q$ of 200 at 10 kc/s will require an inductor fitting into a screening can of about $35 \times 35 \times 18$ cm. This is obviously too large for any general application. Recourse, therefore, has to be made to inductors having a magnetic material as a core.

By decreasing the cross-sectional area of the toroid former, a $Q$ of 200 at 10 kc/s may be obtained in a screening can of $25 \times 25 \times 12{\cdot}5$ cm.

**18.3.2.2. Inductors with Magnetic Cores.** If a magnetizable core is placed within the field of a coil of wire, the inductance of the latter is increased. If the total resistance is increased to a lesser extent than the inductance is increased, the $Q$ will be increased. As all magnetizable substances that may be used are also conductors, currents will be induced into the magnetizable core and energy will be dissipated therein. This has the effect of increasing the A.C. resistance of the coil of wire. In order to reduce this loss, the resistance of the material of the magnetizable core

is split up by laminating or powdering, adjacent laminations or particles being separated by insulating materials. In addition, the hysteresis effect noted in magnetizable substances gives rise to an extra loss of energy with a consequent increase in the A.C. resistance of the coil of wire.

It may be shown that the resistance of an iron-cored inductor is given by

$$R = L(K+\alpha f+\beta f^2) \quad . \quad . \quad . \quad 18(\text{vi})$$

where $K$ is a space factor,

$$\begin{aligned} \alpha &= F_c+F_h I\sqrt{L}, \\ \beta &= F_e+k, \\ F_c &= \text{residual loss factor}, \\ F_h &= \text{core hysteresis loss factor}, \\ I &= \text{r.m.s. current in inductor}, \\ F_e &= \text{core eddy-current loss factor} \\ k &= \text{a wire eddy current factor}. \end{aligned}$$

It will be noticed that the term $\alpha$ is dependent on current, and the relationship between current and p.d. is therefore non-linear. The portion of $\alpha$ which is dependent on current gives rise to intermodulation effects. The term "intermodulation" covers the condition in which an input current of frequencies $f_1$ and $f_2$ gives rise to p.d.'s of frequencies $(nf_1 \pm mf_2)$, where $m$ and $n$ are positive integers, ranging from zero to infinity.

We have already discussed $K$ and $k$ in **18.3.2.1**. For any particular core, all the factors of 18(vi) may be determined by measurements on a trial winding, separating out $K$, $\alpha$ and $\beta$ by measurements at 3 frequencies (one of which may be D.C.), and by keeping the frequency constant, $F_h$ may be determined by changing the current. The technique of such measurements is described in a series of articles in *Electronic Engineering*, August–December, 1943, entitled, "Dust-Cored Coils", by V. G. Welsby.

Various types of dust core are available, ranging from toroids of mean radius 3·2 cm. with a cross-section of 1·52 × 1·41 cm. (axial) made of a material of permeability of 125, to small dust cores of about 1 cm. in length and 0·3 cm. in diameter, the former being suitable for use at about 4 kc/s, and the latter at over 1 Mc. The range 500 c/s to 2 Mc/s can be covered by dust-cored inductors of small size, which have $Q$'s in excess of 100. By choice of core and winding, $Q$'s in excess of 300 may be anticipated over a range 2kc/s to 1 Mc.

Laminated cored inductors may be considered as being simplified

forms of dust cores, the magnetizable material being in the form of sheets or laminations, successive laminations being separated by means of insulating coatings. The use of such coils is probably restricted to the low-frequency ranges (20 c/s to 1 or 2 kc/s), the $Q$'s being generally of the order of 50 for small coils not exceeding $3{\cdot}5 \times 7 \times 8$ cm. In order to obtain stability in inductance value, an air gap may have to be introduced into the core, and this increases the difficulty of designing such coils.

**18.4. Measurement and Adjustment of Components.** For detailed discussion on the measurement of filter components, recourse should be made to some of the books written on that subject.* The following is a very brief discussion on this problem.

**18.4.1. Capacitors.** These are probably the components of a filter which may be measured and adjusted most accurately. The change of capacitance with frequency of the good (i.e. low-loss) capacitors which may be used in filters is very small, and may in most cases be neglected. Internal inductance restricts the actual magnitude of capacitance at any frequency, but if care is taken, this should not be of great importance.

Thus we may use a bridge working at a low (audio-) frequency, where such a bridge may be made to give a high degree of accuracy, and to measure and adjust our capacitor by means of this bridge. The bridge should preferably be a unity ratio arm bridge, having a fixed earth connection at the junction between the two unknown impedances. Of these, one may be a fixed capacitor of capacitance greater than the highest capacitance it is required to measure, and the other a variable capacitance of the same, or greater, total capacitance. Small series resistors in each of these two arms enable the bridge balance to be made perfect. The bridge is first balanced, the unknown capacitor added in parallel with the variable capacitor, and the bridge rebalanced. The difference between the capacitance of the variable capacitor in the two balance conditions is the capacitance of the added capacitor. An accuracy of $\pm 0{\cdot}1\%$ in measurement should be possible with precision laboratory bridge components, and adjustment of capacitance to $\pm 0{\cdot}5\%$ should prove practicable. With variable trimmers across the unknown capacitor, adjustment to $\pm 0{\cdot}1\%$ should prove to be possible. Thus capacitors should be able to be produced to an accuracy of $\pm 0{\cdot}5\% \pm 0{\cdot}1\%$ for fixed capacitors, and $\pm 0{\cdot}1\% \pm 0{\cdot}1\%$ for capacitors with continuously variable trimmers.

* E.g., *Alternating Current Bridge Methods*, Hague (Pitman & Sons).

Complete bridges are available for precision measurements of capacitance, and most of the precision instrument manufacturers produce suitable pieces of apparatus.

**18.4.2. Inductors.** Here the problem is more difficult. One method which has been used successfully for inductors to be used up to 500 kc/s is described here.

It will be remembered that an inductor may be considered, to a fair degree of accuracy, as consisting of a dissipative inductance in parallel with a shunt capacitance. For a given core and shape and type of winding, the latter is approximately constant, and independent of the inductance. Thus a low-frequency measurement will give the value of the inductance, this being known as its D.C. or true inductance. The test frequency must be chosen so that the effect of the shunt capacitance is negligible.

A low-frequency Maxwell Bridge or Owen Bridge * has been found to give good results, an overall adjustment and bridge accuracy of $\pm 0{\cdot}7\%$ being obtained if care is taken in screening and earthing. A difference method is again essential, and reference should be made to Hague's book for the details.

For checking the effective series resistance of an inductor near its working frequency, a simplified form of the bridge described by Welsby (*Electronic Engineering*, 1943) has been developed. It enables measurements to be made at 11 frequencies, approximately logarithmically spaced between 10 kc/s and 470 kc/s, to an accuracy of $\pm 10\%$. This figure can be improved on only by producing a precision bridge which may prove impossible to be used by other than skilled laboratory staff.

The bridge consists of twin-wound transformer ratio arms supplying the bridge from a pre-set 11 frequency oscillator. The resistance arm is a decade H.F. type resistance box, of 100 ohms maximum resistance, in 0·01-ohm steps. The unknown arm consists of a double-screened ballast inductor, one for each of the chosen frequencies in series with a double-screened compartment for the unknown inductor, and in series with a 0–1000 $\mu\mu$F variable air capacitor of low loss. The lower ends of the two unknown arms are connected together and to earth. The two outer screens are connected to earth, and the inner screen of the ballast coil container is connected to the transformer ratio arm, the inner screen of the unknown inductor container being connected to the high potential end of the capacitor. The detector, pre-tuned to

* *Alternating Current Bridge Methods*, Hague (Pitman & Sons.).

the same chosen frequencies, is connected between the centre point of the ratio-arm transformer and earth.

The bridge is used as follows. First the leads appearing in the unknown inductor container are connected together, and the bridge balanced by adjusting both resistance box and the air capacitor. The unknown inductor is then inserted in the container and connected up, and the bridge rebalanced. The difference between the two settings of the resistance box is the series resistance of the inductor. The $Q$ may then be calculated from the known low-frequency inductance.

**18.4.3. Adjustment of Components in a Filter.** For certain purposes it may be possible to adjust the components of a filter in position.

Calculation shows that it is more important that a resonating arm should resonate at its correct frequency than that either one or other of its components should be accurate, and the remainder inaccurate. Thus it is possible to adjust separately the components of a filter, assemble the filter and trim the components (usually the capacitors) in the complete filter to give the correct resonances. These generally give rise to peaks of high attenuation, and a form of measuring set such as will be described in Section 19 may be used. The procedure is to set the variable frequency testing oscillator to one of these resonant frequencies, and trim the capacitor (or inductor) of that resonating circuit to give a maximum of loss. This method may result in it being made possible for components as much as $\pm 5\%$ out from their specified values to be used. If the components are separately adjusted before assembly, $\pm \frac{1}{2}\%$ is a more usual figure for adjustment. For narrow band-pass filters even this figure of $\pm \frac{1}{2}\%$ may prove to be inadequate, and recourse may have to be made to the adjustment of resonant frequencies in order to produce a filter whose performance agrees with the design performance.

In the case of lattice-type filters, such adjustments must be carried out in the completed filter, and this is sometimes a disadvantage when a lattice structure is used.

**18.5. Choice of Filter Configuration.** In all ladder type networks, two alternative forms are generally available. One is based on a series-derived half-section, and the other on shunt-derived half-sections. Where the various circuit capacitances are of the order of 100 times the self-capacitances of the inductors, there is little to choose between the two alternative forms, except

in the cases where price considerations make essential the choice of a circuit which has the fewest number of the more expensive component (i.e. capacitor or inductor). As the frequency rises, however, the circuit capacitances approach the self-capacitances of the inductors, and stray component capacitances become important. In order to overcome these difficulties, certain precautions should be taken. These include the choice of circuit so that parallel resonant circuits are used. The self-capacitances of the inductors may be allowed for by providing a parallel capacitor of design capacitance less the self-capacitance of its associated inductor. A mean figure for the latter, one holding for each type of inductor, may be used. In the case of series arms, each resonant circuit should be double screened, the outer screen being connected to the earthy side of the circuit, and the inner screen connected to the resonant circuit so that the capacitance between inner and outer screens is thrown across a parallel resonant circuit where it may be allowed for.

## 19. MEASUREMENTS ON ACTUAL FILTERS.

If the impedance at each end of a network is measured with the other end first short-circuited and then open-circuited, the image impedance at one end is equal to the square root of the product of the two impedances measured at that end, and the hyperbolic tangent of the image transfer coefficient is equal to the square root of the ratio of the short-circuit and open-circuit impedance measured at either end of the network (see 3(v) and 3(vi)).

In this way $Z_{01}$, $Z_{02}$ and $P$ may be determined for any particular frequency from a set of impedance measurements on the network. If, however, the image attenuation coefficient exceeds about 2 nepers, or 20 db, the open-circuit and short-circuit impedances differ from each other and from the image impedance by a very small amount, and although this means that the image impedances may be determined very accurately, the image transfer coefficient accuracy will be of a very low order.

It is obvious that, once $Z_{01}$, $Z_{02}$ and $P$ are known, the insertion-loss of the network when inserted between generator and load of known impedances can be calculated as described in Section 8.

It is often more useful to be able to measure the insertion-loss of a network between two known impedances without having to calculate it from the network parameters. A form of transmission-measuring set enables this measurement to be made.

By means of such a transmission-measuring set a generator of internal impedance $Z_A$ and constant e.m.f. $v$ can be connected to a load of impedance $Z_B$ either direct or through the network under test. If the p.d. across the load in the two cases is $V_a$ and $V_b$ respectively, the insertion-loss is given by

$$A'_{\text{db}} = 20 \log_{10} \left| \frac{V_a}{V_b} \right|$$

and the insertion phase-shift by

$$B' = \arg V_a - \arg V_b.$$

Let us consider the insertion-loss.

It will be seen that if $A'_{\text{db}}$ is large, $V_a \gg V_b$, and the accuracy with which the ratio $\frac{V_a}{V_b}$ may be determined will be low, since it depends on the accuracy of calibration of the voltmeter used, and the accuracy with which it may be read. As a ratio of $\frac{V_a}{V_b}$ of 1000 gives a value of $A'_{\text{db}}$ of 60 db, and this is not an unusual value of insertion-loss, it will be seen that the difficulties in obtaining an accurate result are very great. It should be noted, however, that the accuracy is a maximum when $A'_{\text{db}}$ is zero, i.e. when $V_a = V_b$.

An improved form of set is shown in Fig. 59. The network under test is fed from a generator, of any internal impedance, through a series impedance $Z_A$ and terminated by an impedance $Z_B$. The same generator also feeds a constant resistance attenuator of design resistance $R$ through a series resistance $R$, the attenuator being terminated by a resistance $R$. The attenuator is adjusted so that the same p.d. is measured across the two terminating impedances $Z_B$ and $R$.

Then

$$\begin{aligned} 20 \log_{10} \left| \frac{v}{V} \right| &= A_{\text{db}} + 20 \log_{10} 2 \\ &= A'_{\text{db}} + 20 \log_{10} \left| \frac{Z_A + Z_B}{Z_B} \right| \end{aligned}$$

where $A_{db}$ is the attenuation coefficient of the attenuator and $A'_{db}$ is the insertion-loss of the network.

Thus

$$A'_{db} = A + 20 \log_{10} \left| \frac{2Z_B}{Z_A + Z_B} \right|.$$

The generator and series impedances act as generators of internal impedance equal to the series impedances and of e.m.f. equal to the p.d. across the generator terminals. (Thévenin's Theorem, Section 2). The correction factor,

$$20 \log_{10} \left| \frac{2Z_B}{Z_A + Z_B} \right|,$$

is necessary to allow for the network under test being measured between unequal impedances, and the attenuator being used between equal impedances. When $Z_A$ and $Z_B$ have equal arguments, the table below may be used to determine the value of this correction factor.

| $Z_A/Z_B$ | Correction Factor (db) | $Z_A/Z_B$ | Correction Factor (db) |
|---|---|---|---|
| 0 | 6·0 | 3·25 | − 6·5 |
| 0·1 | 5·2 | 3·5 | − 7·0 |
| 0·2 | 4·4 | 3·75 | − 7·5 |
| 0·4 | 3·1 | 4·0 | − 8·0 |
| 0·6 | 2·0 | 4·5 | − 8·8 |
| 0·8 | 0·9 | 5·0 | − 9·6 |
| 1·0 | 0 | 5·5 | − 10·2 |
| 1·2 | − 0·8 | 6·0 | − 10·9 |
| 1·5 | − 2·0 | 7·0 | − 12·0 |
| 1·75 | − 2·8 | 8·0 | − 13·1 |
| 2·0 | − 3·5 | 9·0 | − 14·0 |
| 2·25 | − 4·2 | 10·0 | − 14·8 |
| 2·5 | − 4·9 | | |
| 2·75 | − 5·5 | | |
| 3·0 | − 6·0 | | |

A set suitable for use in this way is shown in Fig. 59. The components enclosed within the dotted lines are made up on one panel and provide facilities for connecting a generator to the circuit under test and to the attenuator, each being fed through its appropriate impedance ($Z_A$ and $R$ respectively). The circuit under test is terminated with its appropriate impedance $Z_B$ and the attenuator by $R$. A key connects an external high impedance voltmeter to

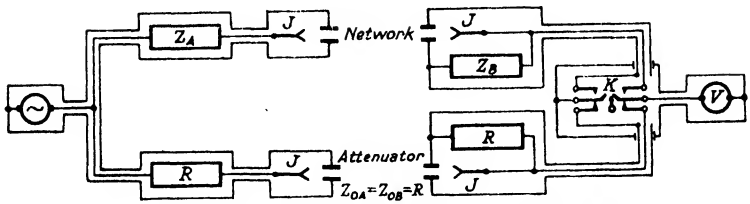


FIG. 59.—Insertion-loss Measuring Set for Unbalanced Circuits.
*J* denotes coaxial jack; *K* denotes key; *V* denotes high-impedance voltmeter.

either of the two terminating impedances. As shown, the set will measure unbalanced circuits, and a balanced form is obviously possible by splitting all impedances and putting half into each leg of the circuit. The diagram also shows the screening that is necessary when high insertion-losses are to be measured. It is not advisable to attempt to measure the high insertion-loss of a balanced circuit, as very great care has to be taken to prevent any direct leak from the generator earth unbalance to the voltmeter, which sets an upper limit to the loss that can be measured.

If the insertion phase-shift has to be measured, an additional piece of apparatus is necessary, which enables the difference in argument between the p.d.'s across the loads $Z_B$ and $R$ to be measured. One such piece of apparatus is shown in diagrammatic form in Fig. 60. It is based on the insertion phase-shift measuring set developed by the P.O. Engineering Department.* The portion of the circuit to the left of the dotted line is similar to the circuit described for the measurement of insertion-loss. The attenuator is adjusted until the voltmeter $V$ reads the same p.d. in both positions 1 and 2 of the key $K$. The two p.d.'s across the outputs of the amplifiers $A1$ and $A2$ differ by the insertion phase-shift of the network under test, as the insertion phase-shift of the lower network is zero, it being purely resistive. These two p.d.'s are then applied to the frequency changers $F.C1$ and $F.C2$, which are supplied with a modulation current from $G2$. The difference in frequency between the generators $G1$ and $G2$ is made equal to a low frequency (e.g., 50 c/s) to which the two filters $F1$ and $F2$ offer low attenuation and equal phase-shifts. The difference in phase-shifts between the upper and lower circuits is unchanged (except in sign) by the change in frequency occurring in the frequency changers. After passing through two amplifiers $A.A1$ and $A.A2$, the resulting signals are applied to a direct reading phase-meter $P.M$, from which the insertion phase-shift may be read.

* "Apparatus for the Measurement of Insertion Phase-shift at Radio Frequencies", R. F. J. Jarvis and E. F. S. Clarke, *P.O.E.E.J.*, Vol. 33, p. 162.

An alternative arrangement is to pass the signal from the lower circuit through an adjustable phase-changer, and apply it and the signal from the upper circuit to a null-indicator. Then adjustment of the attenuator and of the phase-changer for a null-reading of the indicator enables the insertion-loss and phase-shift to be read off from the settings of the attenuator and phase-changer respectively. The alternative arrangement is also shown in Fig. 60.

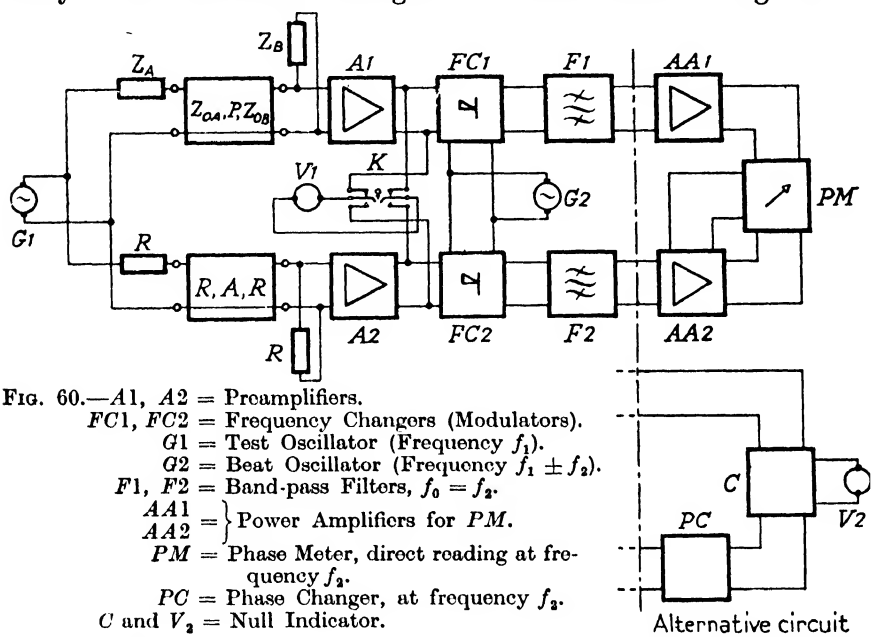


FIG. 60.—$A1$, $A2$ = Preamplifiers.
$FC1$, $FC2$ = Frequency Changers (Modulators).
$G1$ = Test Oscillator (Frequency $f_1$).
$G2$ = Beat Oscillator (Frequency $f_1 \pm f_2$).
$F1$, $F2$ = Band-pass Filters, $f_0 = f_2$.
$AA1$, $AA2$ = Power Amplifiers for $PM$.
$PM$ = Phase Meter, direct reading at frequency $f_2$.
$PC$ = Phase Changer, at frequency $f_2$.
$C$ and $V_2$ = Null Indicator.

The precautions referred to in Section 18 in the cases where the insertion-loss is high, must also be taken when measuring any piece of apparatus.

In all cases the generator should have a good wave-form, and the voltmeter should have a high input impedance and be tuned to the fundamental frequency of the generator. It is possible in high-, band-pass and band-stop filters for the second or higher harmonics of the testing frequency to fall in pass-bands, or at frequencies to which the filter offers a low loss. In such a case the maximum loss that can be measured is of the order of 10 to 20 db less than the ratio between fundamental and any harmonic frequency in the generator output. The tuning of the voltmeter circuit should be such that the selectivity of the voltmeter at its tuned frequency to any harmonic frequency exceeds the highest insertion-loss less the fundamental to harmonic ratio of the generator, by at least 20 db.

## 20. THE DESIGN OF FILTERS ON AN INSERTION-LOSS BASIS.

It may have been noticed that although each filter network that has been designed in the preceding Sections has had to meet an insertion-loss requirement, the filters have been designed on an image-parameter basis and the insertion-loss has been obtained from these parameters by methods which have been fully described in the earlier Sections. There is a reason for this indirect design method: it is that the image-parameters of a Zobel-type filter can be obtained with ease, whereas the direct calculation of the insertion-loss characteristic of a network involves an enormous amount of computation. The indirect method does give good results, but when a steep-sided filter has to be designed it frequently happens that the dissipation of the components prevents an acceptable pass-band insertion-loss characteristic from being obtained and the best that can then be done is to design an equalizing network which will correct for the failure of the filter to meet the pass-band requirements.

Many attempts have been made to develop a design method which starts with the insertion-loss requirements and the dissipation coefficients of the components that are to be used and has at its end a network meeting the requirements. Of these attempts that due to Darlington (of the Bell Laboratories) appears to show the most promise and his method is described in this Section.

**20.1. The Choice of an Insertion-loss Characteristic meeting the Design Requirements.** The principles underlying Darlington's design method may best be understood if we consider the design of a low-pass filter. The application of the method to the design of other types of filter will be described later.

The non-dissipative networks shown in Fig. 61 have complex insertion-voltage ratios which may be written as

$$\exp\,(P') = \sqrt{K}\frac{\mathcal{A}+j\omega\mathcal{B}}{M(\omega^2)}$$
$$= \exp\,(A'+jB')$$

where $\mathcal{A}$ and $\mathcal{B}$ are polynomials in $\omega^2$ with real coefficients,

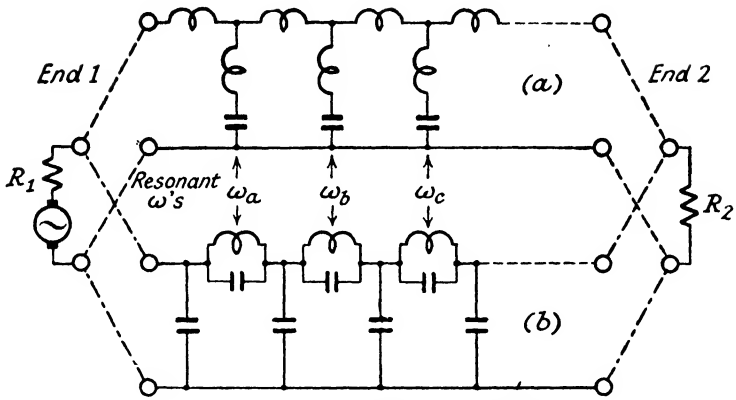


FIG. 61.—Low-pass Filter Networks.

$A'$ is the insertion-loss in nepers,
$B'$ is the insertion-phase shift in radians,
$K$ is a positive constant and

$M(\omega^2)$ is of the form $\prod_{r=1}^{n}(\omega^2 - \omega_r^2)$

As our chief concern is with the insertion-loss, we can take the squares of the moduli of both sides of the equation given above and write

$$\exp 2A' = K\frac{\mathcal{A}^2+\omega^2\mathcal{B}^2}{M^2(\omega^2)} \quad . \quad . \quad . \quad 20(\text{i})$$

The insertion-loss requirements, to which we have to work, can be set down as shown in Fig. 62, the insertion-loss of the filter having to lie within the shaded areas on the figure. $A'_p$ is the maximum allowable pass-band distortion, $A'_s$ (which is a prescribed function of $\omega$) is the minimum discrimination insertion-loss and $A'_{min.}$ is the "flat-loss" of the filter. In general the only requirement for $A'_{min.}$ is that it shall be as small as possible.

Let us now rewrite 20(i) as

$$\exp 2A' = \exp 2A'_{min.} \cdot \frac{F(\omega^2)}{M^2(\omega^2)}$$

or

$$\exp 2(A' - A_{min.}) = \frac{F(\omega^2)}{M^2(\omega^2)} \quad . \quad . \quad . \quad 20(\text{ii})$$

The modified insertion-loss requirements can be read off against the auxiliary scale $(A' - A'_{min.})$ which is shown on the left of Fig. 62.

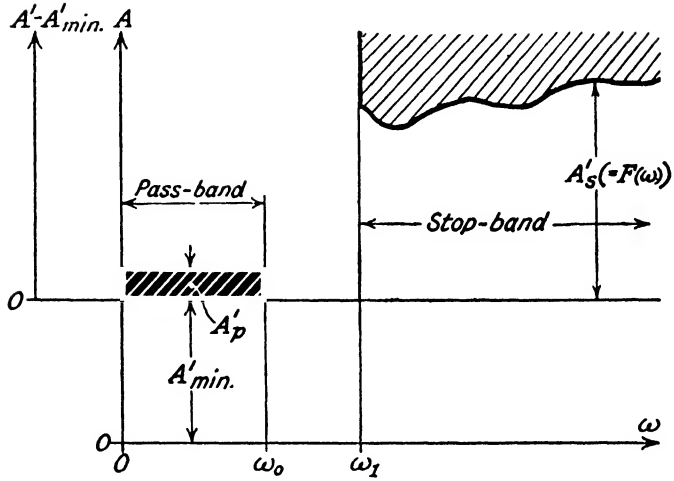


FIG. 62.—Insertion-loss specification for Low-pass Filter Network. The curve of insertion-loss $v$ $\omega$ must lie within the shaded area.

In Fig. 63 the insertion-loss requirements have been expressed in terms of exp $2(A' - A'_{min.})$.

If $A'_s$ is independent of $\omega$, an expression (in the form given by the right-hand side of (i) ) may be obtained by the use of elliptic

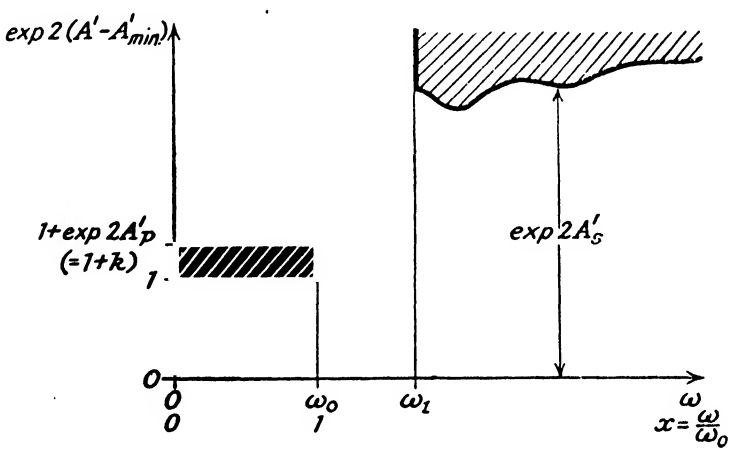


FIG. 63.—Specification in terms of Insertion Voltage-Ratio.

functions. A method applicable to any form for $A'_s$ is described below.

Let us design a "reference filter" having a cut-off at $\omega_0$, the

highest angular velocity in the specified pass-band, and having an image-attenuation which exceeds $A'_s$ by at least $\log_\varepsilon \sqrt{\frac{2}{A'_p}}$ nepers if $A'_p$ and $A'_s$ are in nepers, or by $10 \log_{10} \frac{17 \cdot 4}{A'_p}$ if $A'_p$ and $A'_s$ are in db. At least one constant-$k$ half section must be included to ensure that at $\omega = \infty$ the image-attenuation is infinite. This is necessary as the insertion-loss of any low-pass type of network is infinite at $\omega = \infty$.

Now let us investigate the function

$$1 + k \cosh^2 P \quad . \quad . \quad . \quad . \quad 20(\text{iii})$$

where $P$ is the image-transfer coefficient of the "reference filter". In the pass-band of a dissipationless filter (see Section 5), $\cosh P$ lies between $-1$ and $+1$ and $\cosh^2 P$ therefore lies between 0 and $+1$. Hence in the range 0 to $\omega_0$ (the pass-band of the "reference filter") function (iii) will lie between 1 and $1+k$. Thus function (iii) complies with the pass-band insertion-loss requirements as shown in Fig. 64, if we make $10 \log_{10} (1+k) = A'_p$ db. In the attenuating-band of the "reference filter" $\cosh P$ is of the form $A + jn\pi$ and if $A$ exceeds 3 nepers

$$\cosh^2 P = \cosh^2 (A + jB) \doteqdot [(-1)^n \tfrac{1}{2} \exp A]^2 = \tfrac{1}{4} \exp 2A$$

and $\frac{1}{4} \exp 2A$ will then exceed 40 and we can ignore 1 in comparison with $k \cosh^2 P$ and write $\frac{k}{4} \exp 2A$ for $1 + k \cosh^2 P$.

The "reference filter" was designed so that

$$A > A'_s + \tfrac{1}{2} \log_\varepsilon \frac{2}{A'_p} \text{ nepers}$$

and therefore $\exp A > \sqrt{[2/A'_p]} \exp A'_s$

i.e. $\exp 2A > [2/A'_p] \exp 2A'_s$

or $[A'_p/2] \exp 2A > [k/4] \exp 2A > \exp 2A'_s$

i.e. the expression (iii) also meets the attenuating-band specification. We may therefore write

$$\exp 2(A' - A'_{min.}) = 1 + k \cosh^2 P \quad . \quad . \quad 20(\text{iv})$$

the right-hand side being of the form required by (ii).

The first stage in the design is now clear. A "reference filter" is designed having a cut-off at the top of the required pass-band and having an image-attenuation exceeding the specified suppression-insertion-loss by at least $10 \log_{10} \frac{17 \cdot 4}{A'_p}$ db when $A'_p$ is given in db.

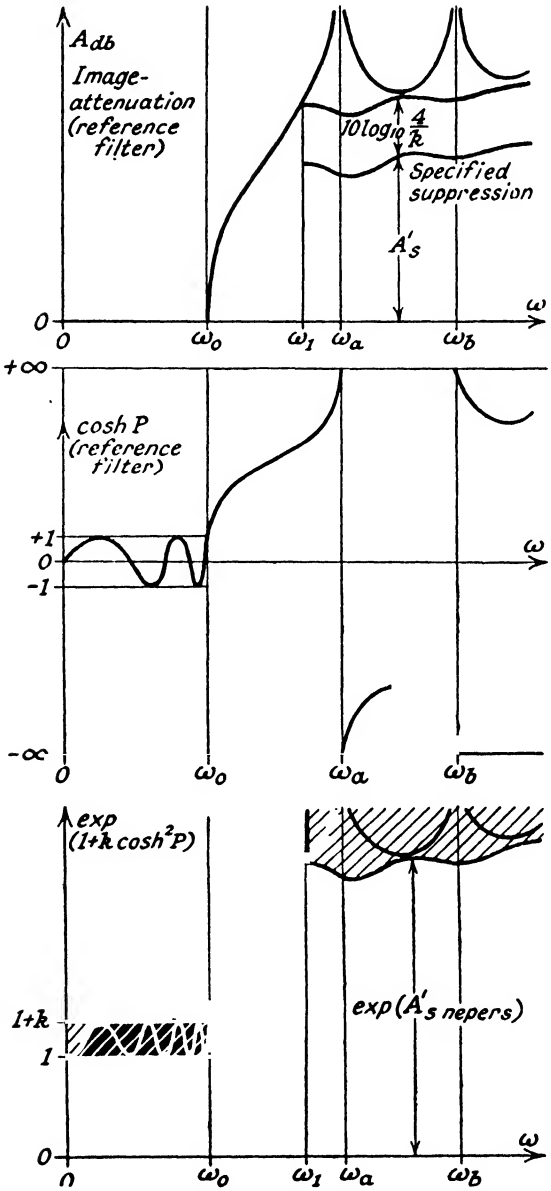


FIG. 64.—Stages in the choice of an Insertion Voltage-Ratio Function.

The Table below gives corresponding values of $A_p$, $k$ and

$$10 \log_{10} \frac{17{\cdot}4}{A'_p} \text{ db.}$$

| $A'_p$ db | 1·0 | 0·7 | 0·5 | 0·35 | 0·2 | 0·15 | 0·1 |
|---|---|---|---|---|---|---|---|
| $k$ | 0·26 | 0·18 | 0·12 | 0·084 | 0·047 | 0·035 | 0·023 |
| $10 \log_{10} \frac{17{\cdot}4}{A'_p}$ db | 12 | 13½ | 15 | 17 | 19½ | 20½ | 22 |

The " reference filter " may be designed most easily by the use of templates as described in Section 14. Only the $X_\infty$ values of the sections used in the " reference filter " need be noted. The element values are not required nor is it necessary to incorporate sections having image impedances which match the load impedances. The cut-off of the " reference filter " can coincide with the top of the pass-band instead of having to be placed some distance from that frequency as would be necessary if a Zobel-type filter were being designed. The sole requirement to be met is that the " reference filter " shall have at least one constant-$k$ half-section.

As usual we shall refer all frequencies to the cut-off frequency $(\omega_0/2\pi)$ of the " reference filter " and write $x = \omega/\omega_0$. Designing the " reference filter " by the template method, we shall be able to note the values of $X_\infty$ for the sections chosen to meet the " reference filter " requirements. Then we shall be able to write

$$\cosh P = \frac{\Pi(\sqrt{X_\infty}+\sqrt{X})+\Pi(\sqrt{X_\infty}-\sqrt{X})}{2\Pi\sqrt{(X_\infty - X)}} \quad . \quad 20(\text{v})$$

where $\qquad X = 1 - 1/x^2$

and there is one term in each of the $\Pi$-expressions for each half-section in the " reference filter ". (Using the $X$-relationships given in Section 14 the expression given above can be applied to any form of filter ; low-, high- and band-pass, or band-stop.)

The denominator of the expression for $\cosh P$ for a low-pass filter, will factorize into terms of the form $(x^2 - x_n^2)$, where $x_n^2 = 1/(1 - X_{\infty n})$. From this stage onward a high degree of accuracy in computation is essential.

We can now write down our expression for the insertion-loss as

$$\exp 2(A' - A'_{min.}) = 1 + k \cosh^2 P = N'(x^2)/M'^2(x^2)$$

It is now necessary to substitute $-p^2$ for $x^2$ and write

$$\exp 2(A' - A'_{min.}) = N(p^2)/M^2(p^2).$$

The right-hand sides of the above expressions for

$$\exp 2(A' - A'_{min.})$$

are of the form required in (i) and (ii).

**20.2. Allowance for Dissipation.** If a physically realizable network is to be constructed having the insertion-loss given by (iv) certain restrictions on the form of $N(p^2)$ are necessary.

First factorize $N(p^2)$ so that

$$N(p^2) = J^2\pi(p_n^2 - p^2) \quad . \quad . \quad . \quad 20(\text{vi})$$

where $J$ is a real constant and $p_n^2$'s are either real or occur in conjugate pairs. Then write

$$\mathcal{A}+p\mathcal{B} = \pm J\pi(p_n - p) \quad . \quad . \quad . \quad 20(\text{vii})$$

where the $p_n$'s are either real and negative or occur in conjugate pairs and have negative real parts. This last requirement is essential if the network is not to include sources of power. In (vi) $\mathcal{A}$ is equal to the even-power terms and $p\mathcal{B}$ is equal to the odd-power terms. As a check on the accuracy of factorization and square-rooting, $\mathcal{A}^2 - p^2\mathcal{B}^2$ should be equal to $N(p^2)$.

It is at this point that we can take dissipation into account.

An inductor of inductance $L$ and series resistance $r$ has an impedance of $j\omega L+r = (j\omega+\frac{r}{L})L = (j\omega+d)L$ where $d$ is the "dissipation-coefficient" of the inductor. With $r = 0$ (i.e. $d = 0$) the impedance is $pL$ if $p = j\omega$. With dissipation present the impedance is $(p+d)L$. Similarly if a capacitor has a capacitance $C$ and a shunt conductance $g$, the admittance of the capacitor is $pC$ with $g = 0$ and $(p+d)C$, where $d = g/C$, when dissipation is present. In other words, if a dissipationless network has an impedance given by $f(p)$, then if dissipation $d$ is added equally to each network component the impedance will be given by $f(p+d)$. As the insertion-voltage ratio of a network is a quotient of two impedance functions, if the insertion-voltage ratio of a dissipationless network is given by $F(p)$, then, when dissipation $d$ is added to each component, the insertion-voltage ratio will be given by $F(p+d)$. $F(p)$ has been chosen so that the insertion-loss requirement is met and we design a dissipationless network to have an insertion-voltage ratio given by $F(p - d)$ and we then add dissipation $d$ to each component, the insertion-voltage ratio will be given by $F(\overline{p - d}+d$ i.e. by $F(p)$. This gives us a method enabling us to allow for the dissipation of network components. We now write

$$\mathcal{A}_d+pB_d = \pm J\pi(\overline{p_n+d} - p) \quad . \quad . \quad 20(\text{viii})$$

where $\mathcal{A}_d$ is equal to the even-power terms and $p\mathcal{B}_d$ is equal to the odd-power terms and $d$ is the dissipation-coefficient of each of the components from which we shall make the filter. For the same reasons as before the real parts of the $\overline{p_n+d}$'s must be negative and

this sets a limit to the maximum value of $d$ that we may choose. In point of fact, $d$ should not exceed one half of this maximum allowable figure, or $A'_{min.}$ will be found to be very high. To be exact we should also modify $M^2(p^2)$ by writing $p - d$ for $p$, but the error introduced by leaving $M^2(p^2)$ unchanged is so small that it may be ignored. The insertion-voltage ratio of our network before dissipation is added is given by

$$\exp 2(A' - A'_{min.}) = \frac{\mathcal{A}_d^2 - p^2\mathcal{B}_d^2}{M^2(p^2)} = \frac{N_d(p^2)}{M^2(p^2)} \quad . \quad 20(\text{ix})$$

We can now determine $A'_{min.}$ by finding the minimum value of $N_d(p^2)/M^2(p^2)$ in the negative range of $p^2$. This minimum is equal to $\exp 2A'_{min.}$ when $A'_{min.}$ is in nepers.

We must next factorize a new expression, writing

$$N_d(p^2) - M^2(p^2)/\exp 2A'_{min.} = J'^2\pi(p_n'^2 - p^2) \quad . \quad . \quad 20(\text{x})$$

where $J'$ is a real constant and $p_n'^2$'s are either real or occur in conjugate pairs. Now write

$$\mathcal{A}' + p\mathcal{B}' = \pm J\pi(p_n' - p) \quad . \quad . \quad . \quad 20(\text{xi})$$

where the $p_n'$'s are either real or occur in conjugate pairs. There is however no restriction on the signs of their real parts. $\mathcal{A}'$ is equal to the even-power terms and $p\mathcal{B}'$ is equal to the odd-power terms. There is again a check that we can apply to see if the factorization and square-rooting have been correctly performed, for $\mathcal{A}'^2 - p^2\mathcal{B}'^2$ should be equal to $N_d(p^2) - M^2(p^2)/\exp 2A'_{min.}$.

The $\mathcal{A}$'s and $\mathcal{B}$'s include in themselves factors $\pm J$ or $\pm J'$ which may be either positive or negative. The signs of the $J$'s must be chosen so that

$\mathcal{A}_d/M(p^2)$ is positive when $p = 0$

$\mathcal{B}'/\mathcal{B}_d$ is negative when $p = j\infty$

$\mathcal{A}'/\mathcal{A}_d$ is positive when $p = 0$ if $R_1 > R_2$ and negative if $R_1 < R_2$.

**20.3. Determination of Open- and Short-Circuit Impedances.** It is now possible to determine the ratio of the generator and load impedances and the open- and short-circuit impedances of each end of the non-dissipative network.

If $R_1$ and $R_2$ are the resistances terminating the ends 1 and 2 of the network

$$4R_1R_2/(R_1+R_2)^2 = 1/\exp 2A'_{min.} = K$$

or if we write $\quad r = R_1/R_2$

$$r = 2/K - 1 \pm 2\sqrt{(1 - K)/K} \quad . \quad . \quad 20\ (\text{xii})$$

If $Z_{f1}$ is the impedance measured at end 1 of the network with

end 2 open-circuited, $Z_{c2}$ is the impedance of end 2 of the network with end 1 short-circuited and so on, and the dissipation-coefficients of all the circuit elements are $d$,

$$\left.\begin{aligned} Z_{f1}/R_1 &= (\mathcal{A}_d - \mathcal{A}')/[p(\mathcal{B}_d+\mathcal{B}')] \\ Z_{c1}/R_1 &= p(\mathcal{B}_d - \mathcal{B}')/(\mathcal{A}_d+\mathcal{A}') \\ Z_{f2}/R_2 &= (\mathcal{A}_d+\mathcal{A}')/[p(\mathcal{B}_d+\mathcal{B}')] \\ Z_{c2}/R_2 &= p(\mathcal{B}_d - \mathcal{B}')/(\mathcal{A}_d - \mathcal{A}') \end{aligned}\right\} \quad . \quad . \quad 20(\text{xiii})$$

If the load resistance $R_2$ is to be infinite,

$$Z_{f1}/R_1 = \mathcal{A}_d/(p\mathcal{B}_d) \quad . \quad . \quad . \quad 20(\text{xiii})$$

and if the load resistance is to be zero,

$$Z_{c1}/R_1 = p\mathcal{B}_d/\mathcal{A}_d \quad . \quad . \quad . \quad 20(\text{xiii})$$

If, however, the dissipation-coefficients of the inductors are to be $d_L$ and those of the capacitors are to be $d_C$ ($d_L > d_C$), we write

$$d = (d_L+d_C)/2, \quad \delta = (d_L - d_C)/2$$

and we allow for dissipation in two stages. First we take $d$ into account and obtain $\mathcal{A}_d$ and $\mathcal{B}_d$ as shown in (vii). We then allow for $\delta$ by writing

$$\begin{aligned} \mathcal{A}_{d\delta}+p\mathcal{B}_{d\delta} &= (\mathcal{A}_d+p\mathcal{B}_d)(p - \delta)(p)^* \\ M_{d\delta} &= Mp(p)^* \end{aligned}$$

the factor $(p)^*$ being inserted only if $Mp$ is an odd-power function of $p$. $\mathcal{A}_{d\delta}$ and $\mathcal{B}_{d\delta}$ are both even-power functions of $p$. If we write

$$N_{d\delta}(p^2) = \mathcal{A}^2{}_{d\delta} - p^2\mathcal{B}^2{}_{d\delta}$$

we can calculate $A'_{min.}$ from the minimum value of $N_{d\delta}(p^2)/M^2{}_{d\delta}(p^2)$ in the negative real range of $p^2$. Factorizing

$$N_{d\delta}(p^2) - M^2{}_{d\delta}(p^2)/\exp\ 2A'_{min.}$$

and square-rooting the zeros gives us $\mathcal{A}'$ and $\mathcal{B}'$, where

$$\mathcal{A}'^2 - p^2\mathcal{B}'^2 = N_{d\delta}(p^2) - M^2{}_{d\delta}(p^2)/\exp\ 2A'_{min.}$$

We can now write down open- and short-circuit impedances from

$$\left.\begin{aligned} \frac{Z_{f1}{}^*}{R_1} &= \frac{(\mathcal{A}_{d\delta} - \mathcal{A}')+\delta(\mathcal{B}_{d\delta}+\mathcal{B}')}{(p - \delta)(\mathcal{B}_{d\delta} - \mathcal{B}')} \\ \frac{Z_{c1}{}^*}{R_1} &= \frac{p^2(\mathcal{B}_{d\delta} - \mathcal{B}')+\delta^2(\mathcal{B}_{d\delta}+\mathcal{B}')+2\delta\mathcal{A}_{d\delta}}{(p - \delta)\{(\mathcal{A}_{d\delta}+\mathcal{A}')+\delta(\mathcal{B}_{d\delta}+\mathcal{B}')\}} \\ \frac{Z_{f2}{}^*}{R_2} &= \frac{(\mathcal{A}_{d\delta}+\mathcal{A}')+\delta(\mathcal{B}_{d\delta}+\mathcal{B}')}{(p - \delta)(\mathcal{B}_{d\delta}+\mathcal{B}')} \\ \frac{Z_{c2}{}^*}{R_2} &= \frac{p^2(\mathcal{B}_{d\delta} - \mathcal{B}')+\delta^2(\mathcal{B}_{d\delta}+\mathcal{B}')+2\delta\mathcal{A}_{d\delta}}{(p - \delta)\{(\mathcal{A}_{d\delta} - \mathcal{A}')+\delta(\mathcal{B}_{d\delta}+\mathcal{B}')\}} \end{aligned}\right\} \quad . \quad 20(\text{xiii})$$

The $Z^*$'s are the open- and short-circuit impedances of a network with inductors with dissipation $+\delta$ and capacitors with dissipation $-\delta$. To calculate the elements of the network we must have the open- and short-circuit impedances $Z_{f1}$, $Z_{c1}$, $Z_{f2}$, $Z_{c2}$ of the network when all dissipation has been removed, and these non-dissipative impedances can be obtained from $Z_{f1}^*$, $Z_{c1}^*$, $Z_{f2}^*$, $Z_{c2}^*$ by substituting $p$ for $(p - \delta)$ and $(p^2 - \delta^2)$ for $p^2$ in (xiii).

The method described in the preceding paragraphs is of use only in the design of low- or high-pass filters. For (loss frequency) symmetrical band-pass or band-stop filters the preliminary design can be based on the assumption that $d_L = d_C$. Section 20.5 will show how the value of $d$ has to be chosen when band-pass or band-stop networks are to be designed.

**20.4. Determination of the values of the network components from $Z_f$ and $Z_c$.** The filter network will have the form shown in either (*a*) or (*b*) of Fig. 61 after one constant-$k$ half-section has been removed.

The design of the "reference filter" has given the values of $x$ (and therefore of $p$ since $p = jx$) for which $P$ (and therefore exp $2A'$) is infinite. We can now allocate as we please these values of $p$ (i.e. $p_a$, $p_b$, $p_c$, etc.) to the resonant or anti-resonant elements of the network of Fig. 61. From the open- or short-circuit impedances of the network at $p^2 = -\infty$ we can decide whether (*a*) or (*b*) of Fig. 61 is the type of network to which the impedances refer. For if $Z_{f1}$ and $Z_{c1}$ approach $Hp$,* as $p^2 \longrightarrow -\infty$ $Z_{f1}$ and $Z_{c1}$ are inductive at those values of $p^2$ and (*a*) is the relevant network. If $Z_{f1}$ and $Z_{c1}$ approach $H/p$ as $p^2 \longrightarrow -\infty$ the impedance is capacitive and (*b*) is the relevant network. Fig. 65 shows the two forms of the low-pass network with the addition of the minimum number of parameters necessary for the complete specification of all the component values. We know and have allocated the $p_r$'s and we have therefore only to find one parameter for each arm of the network. These parameters are the quantities $a_1$, $a_2$, $a_3$, etc. If in the networks (*a*) and (*b*) of Fig. 65 the corresponding $a_n$'s are equal, the insertion-loss characteristics of the two networks will be identical and the open- or short-circuit impedances of one network are the short- or open-circuit admittances of the other network. Thus if we find that the impedances we have obtained refer to one type of network, it is easy to modify them so that they refer to the type of network we wish to design.

* Where $H$ is a positive constant.

Darlington has given a method for calculating the $a_n$'s, but it is probably more simple to proceed as described below.

Let us assume that the open- or short-circuit impedances show that we are dealing with a network of the form (*a*), Fig. 65. Choose

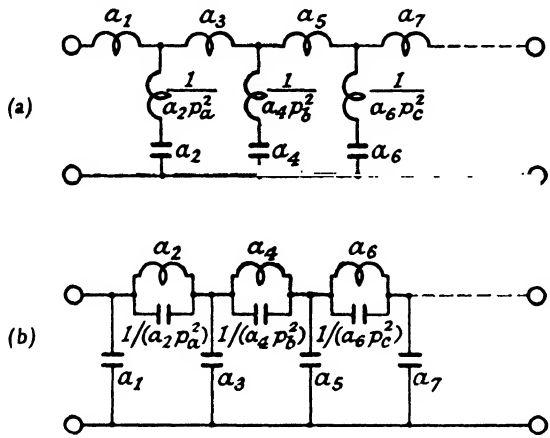


FIG. 65.—Component values in Low-pass Filter Networks.

that impedance, $Z_{f1}/R_1$ or $Z_{c1}/R_1$ which has the simpler form. At $p^2 = p_a^2$ the first shunt arm has a zero impedance and $Z_{f1}/R_1$ or $Z_{c1}/R_1$ is then equal to the impedance of the first series arm at that value of $p$.

Thus $$(Z_{f1} \text{ or } Z_{c1})r^2_a/R_1 = a_1p_a$$
from which we can determine $a_1$.

$Z_{f1}/R_1$ or $Z_{c1}/R_1$ must be equal to $a_1p$ plus the impedance of the first shunt arm in parallel with the rest of the network. Hence the impedance ($Z'_{f1}/R_1$ or $Z'_{c1}/R_1$) of the first shunt arm in parallel with the rest of the network may be written down, as it is given by

$$(Z'_{f1} \text{ or } Z'_{c1})/R_1 = (Z_{f1} \text{ or } Z_{c1})/R_1 - a_1p$$

By inverting this expression we have the admittance of the network to the right of the first series arm. This admittance is equal to the sum of the admittances of the first shunt arm and the rest of the network. If we express the admittance $R_1/Z'_{f1}$ or $R_1/Z'_{c1}$ in partial fractions, it will be found that one term will be of the form $p/[a_2(p^2 - p_a^2)]$ from which we can determine $a_2$. Knowing $p_a^2$ and $a_2$ we can say that the first shunt arm consists of an inductor of inductance $a_2$ in series with a capacitor with which it resonates at $p_a$. The remainder of the admittance $R_1/Z'_{f1}$ or $R_1/Z'_{c1}$ is the admittance of that part of the network to the right of the first shunt arm. Expressing this as an impedance we can determine $a_3$

by putting $p^2 = p_b^2$ after which $a_4$ can be found. Successive operations will give all the $a_n$'s with the exception of that one proper to the series or shunt arm adjacent to the end 2 of the network. Our choice between $Z_{f1}/R_1$ and $Z_{c1}/R_1$ of the simpler expression will always leave the last arm-parameter indeterminate. This parameter we can most easily obtain from $Z_{f2}/R_2$ or $Z_{c2}/R_2$.

The network whose element values we have calculated must now have the dissipation resistors added and is then a filter network having $R_1 = 1$ and $\omega_0 = 1$. It can be changed to a network having $R_1 = R_1$ and $\omega_0 = \omega_0$ by multiplying all inductances by $R_1/\omega_0$, all capacitances by $1/(R_1\omega_0)$ and all resistances by $R_1$.

**20.5. The Design of High-Pass, Band-Pass and Band-Stop Networks.** So far we have considered only the design of a low-pass network. The extension to a high-pass network is simple as we have only to invert our insertion-loss requirements about $\omega_0$, design a low-pass network meeting these requirements, and call each arm-impedance in the low-pass network an arm-admittance. The symmetrical band-pass network is also relatively simple to design. If $\omega_1$ and $\omega_2$ are the extreme ends of the specified pass-band and $n = (\omega_2 - \omega_1)/\sqrt{(\omega_2\omega_1)}$, design a "reference filter" as described in Section 14.1.3 which has an image-attenuation exceeding the specified discrimination insertion-loss by at least $10 \log_{10} \frac{17{\cdot}4}{A'_p}$ db and including at least one constant-$k$ half-section. Note the values of $X_\infty$ and write down $\cosh P$ from the expression given in (v), where $X$ and $x$ refer to the equivalent low-pass "reference filter". Design a low-pass network as described in the preceding sub-section and then replace each inductor $L$ by an inductor $L/n$ in series with a capacitor $n/L$ and each capacitor $C$ in the low-pass network by a capacitor $C/n$ in parallel with an inductor $n/C$, the resistors being left unchanged in position and value. If the components in the low-pass network had dissipation-coefficients each of value $p$, then it will be seen that it is sufficient in the band-pass case to make the sum of the dissipation-coefficients of the capacitor-inductor pairs each equal to $d/n$. One way of doing this in practice is to assume that the capacitors have negligible dissipation-coefficients (this is generally a justifiable assumption) and adjust the dissipation-coefficients of each of the inductors to $d/n$.

If we replace each inductor $L$ in the low-pass network by an inductor $nL$ in parallel with a capacitor $1/(nL)$ and each capacitor $C$ in the low-pass network by a capacitor $nC$ in series with an

inductor $1/(nc)$, the resulting network will be a band-stop network of band-width $(\omega_2 - \omega_1)/\sqrt{(\omega_2\omega_1)}$ equal to $n$.

If a dis-symmetrical band-pass network is to be designed, we can design by the template method described in Section 14.1.4 a "reference filter" to meet the discrimination insertion-loss plus $10 \log_{10} \frac{17{\cdot}4}{A_p'}$ db, including in the reference filter one constant-$k$ half-section. $\cosh P$ can be determined as before by putting $X = \frac{x^2 - x_1^2}{x^2 - x_2^2}$ in (v) there being as many $\Pi$ terms as there are dis-symmetrical half-sections in the reference filter. The low-pass method of design is then followed until the element values have to be calculated. The dis-symmetrical band-pass network will be like one of the low-pass networks of Fig. 65 with each inductor replaced by an inductor in series with a capacitor and each capacitor replaced by a capacitor in parallel with an inductor. The resonant values of $x$ (or $p$) giving rise to the infinite insertion losses are known from the "reference filter" design and these should be distributed so that an arm giving rise to two poles of insertion-loss produces one pole below the pass-band and one above.

Consider as an example a dis-symmetrical filter starting with a first series arm consisting of an inductor $L_1$, in series with a capacitor $C_1$ followed by a first shunt arm consisting of the series connection of an inductor, a capacitor and an inductor in parallel with a capacitor. We have chosen two values of $p$ ($p_{(i)}$ and $p_{(ii)}$) for which the first shunt arm is of zero impedance. At $p_{(i)}$

$$[Z_{f1} \text{ or } Z_{c1}]_{p_{(i)}} = p_{(i)}L_1 + 1/[p_{(i)}C_1]$$

and at $p_{(ii)}$

$$[Z_{f1} \text{ or } Z_{c1}]_{p_{(ii)}} = p_{(ii)}L_1 + 1/[p_{(ii)}C_1]$$

from which $L_1$ and $C_1$ can be determined. We can then remove $pL_1 + 1/[pC_1]$ from $Z_{f1}$ and $Z_{c1}$ leaving $Z_{f1}'$ and $Z_{c1}'$. Expressing $Y_{f1}'(= 1/Z_{f1}')$ or $Y_{c1}'(= 1/Z_{c1}')$ as partial fractions will discover two factors, one of the form $p/[a_{(i)}(p^2 - p_{(i)}^2)]$ and the other of the form $p/[a_{(ii)}(p^2 - p_{(ii)}^2)]$ each of which is the admittance of an inductor in series with a capacitor, the two branches being connected in parallel.

The arm so obtained has the same impedance as has the first shunt arm consisting of the series connection of an inductor, a capacitor and an inductor in parallel with a capacitor.

**20.6. Orchard's Modification to Darlington's Method.** A filter designed by Darlington's method has an insertion-loss which,

in the pass-band, oscillate between the limits set by the pass-band insertion-loss specification (Fig. 66(*a*) ). It is sometimes advantageous to have a pass-band insertion-loss characteristic which does not oscillate (Fig. 66(*b*) ). Orchard, of the G.P.O. Research Station, has shown how Darlington's method can be modified to give the insertion-loss characteristics of Fig. 66(*a*) when the minimum discrimination insertion-loss in the attenuating-band does not depend on frequency.

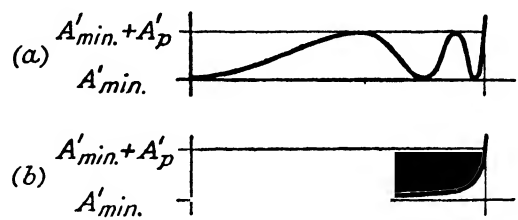


FIG. 66.—Comparison of Pass-band Insertion-loss Characteristics designed by (*a*) Darlington, (*b*) Orchard method.

If a characteristic similar to that shown in Fig. 66(*b*) is required, a high-pass "reference filter" is designed, having a cut-off at $\omega_0$ (the lowest angular velocity in the attenuating-band), which uses only constant-$k$ half-sections and which has an image-attenuation exceeding $A_s'$ by at least $10 \log_{10} \frac{17{\cdot}4}{A_p'}$ db* in the pass-band 0 to $\omega_0$ of the specification (Fig. 67(*a*) ).

For this "reference filter", $\cosh P$ can be written down from (v) using the form for $X$ appropriate to a high-pass filter.

At $\omega_0$ let $\cosh P$ be equal to $\phi$ (Fig. 67(*a*) ).

Then $$\phi^2 = [\cosh^2 P]_{\omega_0}$$

and if the design requirement is just met, $P$ will be equal to $A_s' + \log_\varepsilon \sqrt{\frac{2}{A_p'}}$ where $A_s'$ and $A_p'$ are in nepers.

Hence
$$\begin{aligned}\phi^2 &= \tfrac{1}{4} \exp 2\left(A_s' + \log_\varepsilon \sqrt{\frac{2}{A_p'}}\right)\\ &= \tfrac{1}{4} \exp 2A_s' . \frac{2}{A_p'}\\ &= \frac{1}{2A_p'} \exp 2A_s'\\ &= \frac{1}{k} \exp 2A_s'\end{aligned}$$

* $A_s'$ and $A_p'$ being in decibels.

When $\omega < \omega_0$, $\infty > \cosh^2 P > \phi^2$

and when $\omega > \omega_1$, $0 < \cosh^2 P < +1$ (Fig. 67(*a*) )

Now write $\cosh^2 P_1 = \phi^2 . \cosh^2 P$

When $\omega < \omega_0$, $0 < \cosh^2 P_1 < +1$

and when $\omega > \omega_1$, $\infty > \cosh^2 P_1 > \phi^2$ (Fig. 67(*b*) )

The insertion-loss ratio of the low-pass filter can now be written as $1+k \cosh^2 P_1$

for when $\omega < \omega_0$, $0 < k \cosh^2 P_1 < +k$

i.e. $1 < 1+k \cosh^2 P_1 < 1+k$

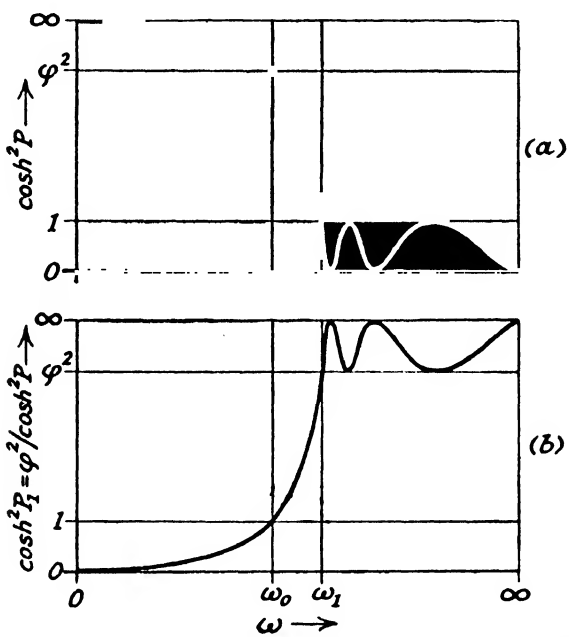


FIG. 67.—Stages in obtaining $\cosh^2 P_1$ for an Orchard Low-pass Filter with the Characteristic shown in Fig. 67(*b*).

and the pass-band requirement is met with a non-oscillatory characteristic, and when

$$\omega > \omega_1, \quad \infty < k \cosh^2 P_1 < k\phi^2$$

i.e. $$\infty > 1+k \cosh^2 P_1 > \exp 2A_s'$$

and the attenuating-band requirement is also met. The design of the filter now proceeds as was described in Section 20.2 *et seq.*

Of the two design methods, Darlington's is the more economical of components, but Orchard's generally allows the use of more dissipative (and therefore less expensive) components.

**20.7. Example. The Design of a Low-pass Filter.** Requirements: To pass frequencies between 0 and 3400 c/s with a distortion not exceeding 1 db; to suppress frequencies above 3800 c/s by at least 28 db more than the minimum loss in the

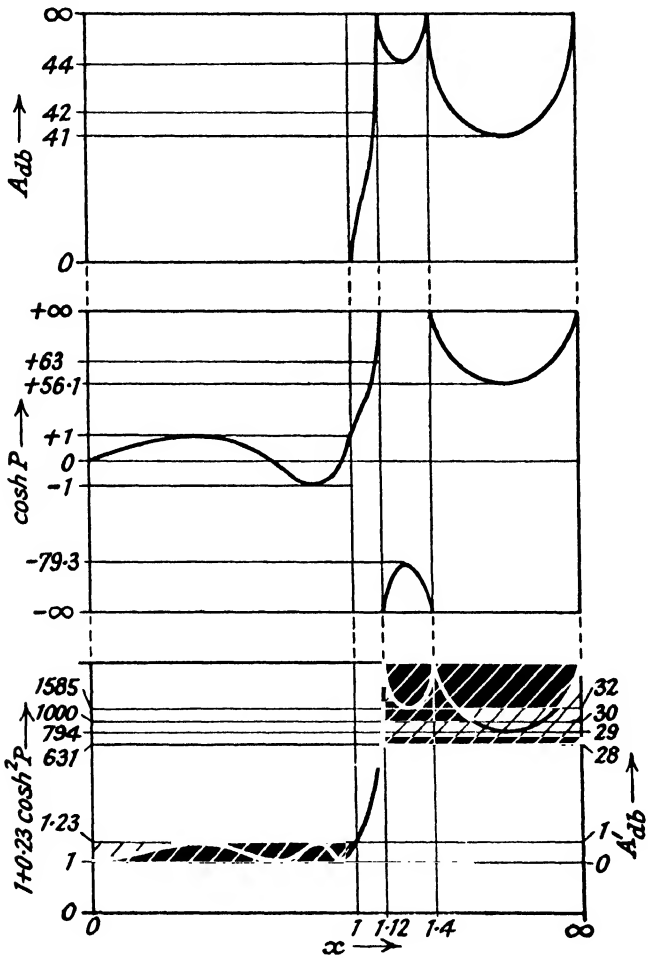


FIG. 68.—Stages in the choice of an Insertion Voltage-Ratio for the Low-pass Filter of Section 20.7.

band 0 to 3400 c/s; to operate between a generator of 600 ohms impedance and a load of infinite impedance.

Referring all frequencies to 3400 c/s the attenuating-band requirements call for a discrimination insertion-loss which exceeds 28 db when $x$ exceeds 1·12.

In this specification $A'_p$ is equal to 1 db and $A'_s$ to 28 db; $k$ is

equal to 0·26 and $10 \log_{10} \frac{17{\cdot}4}{A_p'}$ db is equal to 12 db. The "reference filter" has to be designed to have a cut-off at $x = 1$ and an image attenuation of at least 40 db (= 28+12 db) when $x$ exceeds 1·12. A "reference filter" with one constant-$k$ half-section, one full-section with $m = 0{\cdot}45$ and one full-section with $m = 0{\cdot}7$ meets the image-attenuation requirements.

Substitution in (v) gives

$$\cosh P = \frac{15x(x^2 - 0{\cdot}565)(x^2 - 0{\cdot}9623)}{(x^2 - 1{\cdot}2539)(x^2 - 1{\cdot}9608)}$$

Writing $p = jx$, $p^2 = -x^2$ this expression becomes

$$\cosh P = -\frac{j15p(p^2+0{\cdot}565)(p^2+0{\cdot}9623)}{(p^2+1{\cdot}2539)(p^2+1{\cdot}9608)}$$

and our insertion-loss is given by

$$\begin{aligned}\exp 2(A' - A'_{min.}) &= 1+k\cosh^2 P \\ &= 1+0{\cdot}26\left[\frac{-j15p(p^2+0{\cdot}565)(p^2+0{\cdot}9623)}{(p^2+1{\cdot}2539)(p^2+1{\cdot}9608)}\right]^2 \\ &= \frac{51{\cdot}75(-p^{10} - 3{\cdot}03528p^8 - 3{\cdot}29581p^6 - 1{\cdot}36607p^4+0{\cdot}00985p^2+0{\cdot}11681)}{(p^2+1{\cdot}2539)^2(p^2+1{\cdot}9608)^2} \\ &= N(p^2)/M^2(p^2).\end{aligned}$$

Factorizing the numerator,

$$N(p^2) = 51{\cdot}75\left[\begin{array}{r}(0{\cdot}22812 - p^2)(-1{\cdot}00163+j0{\cdot}06758 - p^2) \\ (-1{\cdot}00163 - j0{\cdot}06758 - p^2). \\ (-0{\cdot}63007+j0{\cdot}33406 - p^2) \\ (-0{\cdot}63007 - j0{\cdot}33406 - p^2)\end{array}\right]$$

and on square-rooting the $p_n^2$'s

$$\mathcal{A}+p\mathcal{B} = \sqrt{(51{\cdot}75)}\left[\begin{array}{r}(-0{\cdot}47762 - p)(-0{\cdot}03362 - j1{\cdot}00136 - p) \\ (-0{\cdot}03362+j1{\cdot}00136 - p). \\ (-0{\cdot}20334 - j0{\cdot}81941 - p) \\ (-0{\cdot}20334+j0{\cdot}81941 - p)\end{array}\right]$$

[Note:

$$\begin{aligned}\sqrt{(0{\cdot}22812)} &= \pm 0{\cdot}47762 \\ \sqrt{(1{\cdot}00163+j0{\cdot}06758)} &= \pm 0{\cdot}03362 \pm j1{\cdot}00136 \\ \sqrt{(1{\cdot}00163 - j0{\cdot}06758)} &= \pm 0{\cdot}03362 \mp j1{\cdot}00136 \\ \sqrt{(-0{\cdot}63007+j0{\cdot}33406)} &= \pm 0{\cdot}20334 \pm j0{\cdot}81941 \\ \sqrt{(-0{\cdot}63007 - j0{\cdot}33406)} &= \pm 0{\cdot}20334 \mp j0{\cdot}81941\end{aligned}$$

and in the expression for $\mathcal{A}+p\mathcal{B}$ the lower signs of the square roots have been chosen so that the $p_n$'s have negative real parts.]

We can now take dissipation into account by adding $d$ to each of the $p_n$'s making sure that their real parts remain negative. Thus $d$ may not exceed 0·03362 and as was pointed out in 20.2 it should not exceed one half of this maximum figure. At the frequencies we are interested in inductors and capacitors can easily be made having dissipation-coefficients of less than 0·01, so we can design our network with $d = 0{\cdot}01$. When 0·01 has been added to each of the $p_n$'s

$$\mathcal{A}_d + p\mathcal{B}_d = \pm\sqrt{(51{\cdot}75)}\begin{bmatrix}(-0{\cdot}46762-p)(-0{\cdot}02362+j1{\cdot}00136-p)\\ (-0{\cdot}02362-j1{\cdot}00136-p).\\ (-0{\cdot}19334-j0{\cdot}81941-p)\\ (-0{\cdot}19334+j0{\cdot}81941-p)\end{bmatrix}$$

and on multiplying-out the right-hand side of this expression and equating the even-power terms to $\mathcal{A}_d$ and the odd-power terms to $p\mathcal{B}_d$

$$\mathcal{A}_d = \pm\sqrt{(51{\cdot}75)}[0{\cdot}90154p^4+1{\cdot}23058p^2+0{\cdot}33254]$$
$$p\mathcal{B}_d = \pm\sqrt{(51{\cdot}75)}[p^5+1{\cdot}93327p^3+0{\cdot}90820p]$$

From (xiii)

$$\frac{Z_{f1}}{R_1} = \frac{\mathcal{A}_d}{p\mathcal{B}_d} = \frac{0{\cdot}90154p^4+1{\cdot}23058p^2+0{\cdot}33254}{p^5+1{\cdot}93327p^3+0{\cdot}90820p}$$

$Z_{f1}/R_1$ approaches $0{\cdot}33254/(0{\cdot}90820p)$ as $p \to 0$ and $0{\cdot}90154/p$ as $p \to \infty$ and the network will therefore start at end 1 with a shunt capacitor. Fig. 69($a$) shows the "reference filter" and Fig. 69($b$) shows the form of the actual filter network we are designing. Its form is that of the "reference filter" with the constant-$k$ half-section removed. The section of the "reference filter" with $m = 0{\cdot}45$ produces a pole in the insertion ratio at $p^2 = 1{\cdot}2539$ and the section with $m = 0{\cdot}7$ a pole at $p^2 = -1{\cdot}9608$. In network Fig. 69($b$) the anti-resonance of $L_1C_1$ has been chosen to give an infinite insertion-loss at $p^2 = -1{\cdot}2539$ and the anti-resonance of $L_2C_2$ has been chosen to give an infinite insertion-loss at $p^2 = -1{\cdot}9608$. Let us connect end 1 to the generator and end 2 to the (open-circuit) load.

At $p^2 = 1{\cdot}2539$ the impedance of $L_1C_1$ will be infinite and $Z_{f1}/R_1$ will then be equal to the impedance of $C_3$ at that value of $p$;

i.e. $$[Z_{f1}/R_1]_{p_a} = [1/(pC_3)]_{p_a}$$

Substituting $-1{\cdot}2539$ for $p^2$

$$[Z_{f1}/R_1]_{-1{\cdot}2539} = 1/(0{\cdot}27210p]$$

and $C_3$ is therefore equal to 0·27210. Now the impedance $Z_{f1}$ of end 1 of the network is equal to the combined impedances of $C_3$

and the open-circuit impedance $Z'_{f1}$ of the rest of the network. We know $Z_{f1}$ and $C_3$, thus we can determine $Z'_{f1}$.

The open-circuit admittance of end 1 is $R_1/Z_{f1}$, the admittance

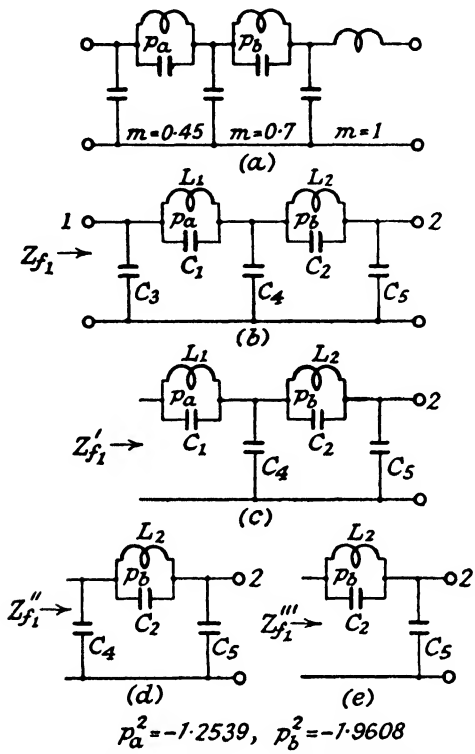


FIG. 69.—(*a*) Reference Filter; (*b*) Actual Filter; (*c*), (*d*) and (*e*) breakdown of actual filter for element calculations.

of $C_3$ is $pC_3 = 0{\cdot}27210p$ and the admittance of the network to the right of $C_3$ $(= R_1/Z'_{f1})$ is given by

$$R_1/Z'_{f1} = R_1/Z'_{f1} - 0{\cdot}27210p$$

$$= \frac{p^5+1{\cdot}93327p^3+0{\cdot}90820p}{0{\cdot}90154p^4+1{\cdot}23058p^2+0{\cdot}33254} - 0{\cdot}27210p$$

$$= \frac{0{\cdot}75469p^5+1{\cdot}59843p^3+0{\cdot}81772p}{0{\cdot}90154p^4+1{\cdot}23058p^2+0{\cdot}33254}$$

Then $$Z'_{f1}/R_1 = \frac{0{\cdot}90154p^4+1{\cdot}23058p^2+0{\cdot}33254}{0{\cdot}75469p^5+1{\cdot}59843p^3+0{\cdot}81772p}$$

Now $Z'_{f1}$ is the impedance of $L_1C_1$ plus the impedance of $C_4$ in parallel with $L_2C_2$ in series with $C_5$.

Expressing $Z'_{f1}/R_1$ in partial fractions

$$\frac{0{\cdot}90154p^4+1{\cdot}23058p^2+0{\cdot}33254}{0{\cdot}75469p^5+1{\cdot}59843p^3+0{\cdot}81772p}$$
$$= p\left[\frac{a}{p^2}+\frac{b}{p^2+1{\cdot}25384}+\frac{c}{p^2+0{\cdot}86416}\right]$$

the denominators of the right-hand side being the factors of the denominator of the left-hand side.

It will be seen from a comparison of the last equation that $a$, $b$ and $c$ must satisfy the relationship

$$a(p^2+1{\cdot}25384)(p^2+0{\cdot}86416)+bp^2(p^2+0{\cdot}86416)+cp^2(p^2+1{\cdot}25384)$$
$$= (0{\cdot}90154p^4+1{\cdot}23058p^2+0{\cdot}33254)/0{\cdot}75469$$

We can determine $a$ by putting $p^2 = 0$, $b$ by putting $p^2 = -1{\cdot}25384$ and $c$ by putting $p^2 = -0{\cdot}86416$. On performing these operations we shall find that

$$Z'_{f1}/R_1 = \frac{0{\cdot}56114p}{p^2+1{\cdot}25384}+\frac{0{\cdot}40614}{p}+\frac{0{\cdot}22678p}{p^2+0{\cdot}86416}$$

The first term is the impedance of a parallel $LC$ network with an anti-resonance at $p^2 = -1{\cdot}25384$. (This value of $p^2$ differs from the chosen value of $-1{\cdot}25390$ by $0{\cdot}005\%$.) The impedance of the network $L_1C_1$ is therefore equal to $\dfrac{0{\cdot}56114p}{p^2+1{\cdot}25384}$ and its admittance is,

$$\frac{p^2+1{\cdot}25384}{0{\cdot}56114} = \frac{p}{0{\cdot}56114}+\frac{1{\cdot}25384}{0{\cdot}56114p}$$
$$= 1{\cdot}782p+\frac{1}{0{\cdot}4475p}$$
$$= C_1p+\frac{1}{L_1p}$$

and $$L_1 = 0{\cdot}4475, \quad C_1 = 1{\cdot}782$$

The impedance $Z''_{f1}$ of $C_1$, $L_2C_2$, $C_5$ is equal to $Z'_{f1}$ minus the impedance $L_1C_1$ and is given by

$$Z''_{f1}/R_1 = Z'_{f1}/R_1 - \frac{0{\cdot}56114p}{p^2+1{\cdot}25384p}$$
$$= \frac{0{\cdot}40614}{p}+\frac{0{\cdot}22678p}{p^2+0{\cdot}86416}$$
$$= \frac{0{\cdot}63292p^2+0{\cdot}35097}{p(p^2+0{\cdot}86416)}$$

We can calculate the value of $C_4$ as we calculated $C_3$ by equating $[Z''_{f1}/R_1]_{-1\cdot9608}$ to $[1/(pC)]_{-1\cdot9608}$. If we perform this operation we shall find that $C_4 = 1\cdot2321$. The impedance $Z'''_{f1}$ of the rest of the network $L_2C_2$ and $C_5$ may be obtained from

$$R_1/Z'''_{f1} = R_1/Z''_{f1} - pC_4$$

$$= \frac{p(p^2+0\cdot86416)}{0\cdot63292p^2+0\cdot35097} - 1\cdot23210p$$

$$= \frac{p(0\cdot22018p^2+0\cdot43173)}{0\cdot63292p^2+0\cdot35097}$$

and

$$Z'''_{f1}/R_1 = \frac{0\cdot63292p^2+0\cdot35097}{p(0\cdot22018p^2+0\cdot43173)}$$

$$= \frac{p(2\cdot87456p^2+1\cdot59401)}{p^2(p^2+1\cdot96081)}$$

$$= \frac{1}{1\cdot23012p} + \frac{2\cdot06162p}{p^2+1\cdot96081}$$

from which $L_2 = 1\cdot052$, $C_2 = 0\cdot4851$ and $C_5 = 1\cdot2301$.

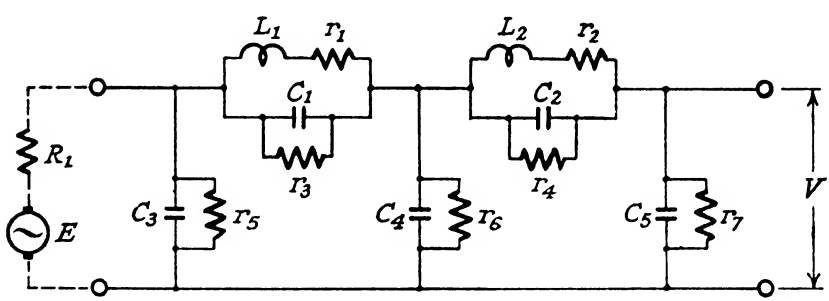


FIG. 70.

(a) $L_1 = 0\cdot4475H$ ; $r_1 = 0\cdot00448\Omega$
$L_2 = 1\cdot052H$ ; $r_2 = 0\cdot0152\Omega$
$C_1 = 1\cdot782F$ ; $r_3 = 55\cdot1\Omega$
$C_2 = 0\cdot4851F$ ; $r_4 = 206\Omega$
$C_3 = 0\cdot2721F$ ; $r_5 = 368\Omega$
$C_4 = 1\cdot2321F$ ; $r_6 = 81\cdot2\Omega$
$C_5 = 1\cdot2301F$ ; $r_7 = 81\cdot3\Omega$.
$R_1 = 1\Omega$ ; $\omega_0 = 1$

(b) $L_1 = 12\cdot75mH$ ; $r_1 = 2\cdot7\Omega$
$L_2 = 29\cdot53mH$ ; $r_2 = 6\cdot3\Omega$
$C_1 = 0\cdot1390\mu F$ ; $r_3 = 33{,}000\Omega$
$C_2 = 0\cdot03784\mu F$ ; $r_4 = 122{,}000\Omega$
$C_3 = 0\cdot02123\mu F$ ; $r_5 = 220{,}000\Omega$
$C_4 = 0\cdot09613\mu F$ ; $r_6 = 47{,}000\Omega$
$C_5 = 0\cdot09597\mu F$ ; $r_7 = 47{,}000\Omega$
$R_1 = 600\Omega$ ; $\omega_0 = 2\pi \times 3400$

$$\text{Insertion-loss} = 20 \log_{10} \left|\frac{E}{V}\right|$$

A filter network of the form shown in Fig. 69(*b*) with the component values we have just calculated, when inserted between a generator of 1 ohm internal impedance and an open-circuit load, will give an insertion-ratio of $(\mathcal{A}_d^2 - p^2\mathcal{B}_d^2)/M^2(p^2)$ which ratio, it

will be remembered, was obtained by predistorting the insertion-ratio $N(p^2)/M^2(p^2)$.

If we now add dissipation $d = 0{\cdot}01$ to all the components of our network its insertion-ratio will again be $N(p^2)/M^2(p^2)$ and the dissipative network will then meet the design requirements when $R = 1$ and $\omega_0 = 1$.

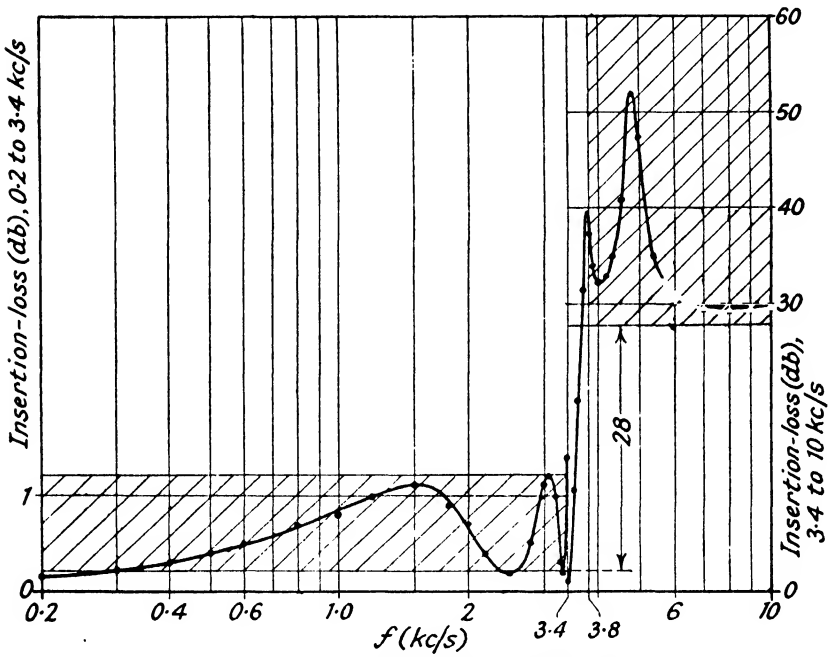


FIG. 71.—Measured Insertion-loss of Filter Network Fig. 70(*b*). Inductances and capacitances correct to $\pm\frac{1}{2}\%$, resistances to $\pm 5\%$. (Change of vertical scale at 3·4 kc/s.)

When dissipation is added, the network has the component values shown in Fig. 70(*a*), and if we multiply all resistors by 600, all inductors by $\dfrac{600}{2\pi \times 3{,}400}$ and all capacitors by $\dfrac{1}{600 \times 2\pi \times 3{,}400}$ we have the network of Fig. 70(*b*) which has a measured insertion-loss between a 600 ohm generator and an open-circuit load shown in Fig. 71. The actual values of the resistors in the practical circuit were chosen so that each reactor had a total dissipation-coefficient of 0·01.

**20.8. Determination of the Zeros of a Polynomial.** A polynomial such as $a_n + a_{n-1} + a_{n-2}x^2 + \ldots + a_0x^n$ $(= F(x))$ is

zero for $n$ values of $x$ and these values of $x$ are known as the $n$ zeros of $F(x)$; they are also the $n$ roots of the equation $F(x) = 0$. These zeros are generally complex and if the coefficients $a_0$, $a_1$, $a_2$ . . . $a_n$ are all real, the zeros will occur in conjugate pairs such as $a+jb$, $a-jb$. We are interested only in polynomials having real coefficients and we shall therefore deal here only with such polynomials.

If $n$ is odd there must be at least one real zero and any other real zeros must occur in conjugate pairs.

A real zero can be found to any degree of accuracy by plotting $F(x)$ for real values of $x$ and increasing the scale of the curve around the value of $x$ at which the curve crosses the $x$ axis.

If $n$ is odd, we can therefore find the one real zero $x_1$ and divide $F(x)$ by $(x - x_1)$. This will leave as quotient an even-power polynomial in $x$.

If $n = 2$, the zeros can be found by the use of the quadratic root-extraction formula 1(i).

If $n = 4$, divide $F(x)$ by the coefficient $(a_0)$ of $x^4$ and write $F(x)/a_0 = a+bx+cx^2+dx^3+x^4$. If $a$ is positive, write down an auxiliary cubic $m^3+cm^2+(bd-4a)m+4ac-ad^2-b^2$. This has a real zero $(m_1)$ greater than $2\sqrt{a}$ and it can be found to a high degree of accuracy by the graphical method described above. The zeros ($x_1$, $x_2$, $x_3$ and $x_4$) of the quartic are then given by

$$x_1 = \tfrac{1}{2}[-R+\sqrt{(R^2-4Q)}],\ x_2 = \tfrac{1}{2}[-R-\sqrt{(R^2-4Q)}]$$
$$x_3 = \tfrac{1}{2}[-T+\sqrt{(T^2-4S)}],\ x_4 = \tfrac{1}{2}[-T-\sqrt{(T^2-4S)}]$$

where
$$Q \text{ or } S = \tfrac{1}{2}[m_1 \pm \sqrt{(m_1^2-4a)}]$$
$$R \text{ or } T = \tfrac{1}{2}[d \pm \sqrt{(d^2-4c-4m_1)}]$$

and the signs of the expressions for $Q$, $R$, $S$ and $T$ are chosen so that $RS+QT = b$.

If $n$ is even and greater than 4 we can proceed as follows.

Divide $F(x)$ by $a_0$, the coefficient of the highest power of $x$ and write $F(x)/a_0$ as

$$x^n+a_1x^{n-1}+a_2x^{n-2}+\ .\ .\ .\ +a_n = F(x)$$

If the zeros of this polynomial are $x_1$, $x_2$, $x_3$ . . . $x_n$, the zeros of

$$x^n-(a_1^2-2a_2)x^{n-1}+(a_2^2-2a_1a_3+2a_4)x^{n-2}$$
$$-(a_3^2-2a_2a_4+2a_1a_5-2a_6)x^{n-3}$$
$$+(a_4^2-2a_3a_5+2a_2a_6-2a_1a_7+2a_8)x^{n-4}\ .\ .\ .\ +a_n^2$$

($n$ even) are $x_1^2$, $x_2^2$, $x_3^2$ . . . $x_n^2$. Successive operations give rise to polynomials having zeros which are the squares, fourth powers, eighth powers, sixteenth powers and so on of the original zeros. If

two numbers are in the ratio of say 1 to 1·1, the 128th powers of the numbers are in the ratio of 1 to about $2 \times 10^5$. This fact enables us to separate out the zeros of a polynomial. Suppose for example that we have found the " 128th power " polynomial by seven operations on the original polynomial. If the " 128th power polynomial " is $x^n + a'_1 x^{n-1} + a'_2 x^{n-2} + \ldots + a'_n$ it will have zeros $x_1^{128}, x_2^{128}, \ldots x_n^{128}$ such that

$$a'_1 = x_1^{128} + x_2^{128} + x_3^{128} + \ldots + x_n^{128}$$
$$a'_2 = x_1^{128}(x_2^{128} + x_3^{128} + \ldots + x_n^{128}) + x_2^{128}(x_3^{128} + \ldots + x_n^{128}) + \ldots$$
$$a'_3 = x_1^{128}x_2^{128}(x_3^{128} + x_4^{128} + \ldots + x_n^{128}) + x_1^{128}x_3^{128}(x_4^{128} + \ldots + x_n^{128}) + \ldots$$

and so on

Now if $\quad x_1 > x_2 > x_3 > \ldots > x_n$

then $\quad x_1^{128} \gg x_2^{128} \gg x_3^{128} \gg \ldots \gg x_n^{128}$

and we can say

$$a'_1 = x_1^{128},\ a'_2 = x_1^{128}x_2^{128},\ a'_3 = x_1^{128}x_2^{128}x_3^{128}, \ldots$$

and so on.

If the coefficients of the polynomial are real, $|x_1| = |x_2|$, $|x_3| = |x_4|$ and so on, as the zeros occur in conjugate pairs.

Thus
$$a'_2 = (x_1x_2)^{128} = [(|x_1| \exp j\theta_1)(|x_2| \exp -j\theta_1)]^{128}.$$
$$= |x_1|^{256}$$
$$a'_4 = [\,|x_1| \,.\, |x_3|\,]^{256}$$
$$a'_1 = [\,|x_1| \,.\, |x_3| \,.\, |x_1|\,]^{256}$$

and so on.

Now $x_1 = |x_1| \exp j\theta_1$, $x_2 = |x_2| \exp j\theta_2 = |x_1| \exp -j\theta_1$ and if we go back to our original polynomial $F(x)$ and plot $F(|x_1| \exp j\theta_1)$ for values of $\theta_1$, lying between 0 and $\pi$ we can find a value of $\theta$, for which $F(|x_1| \exp j\theta_1)$ is approximately zero. More exact values of $|x_1|$ and $\theta_1$, can be obtained as described below.

Write

$$x^2 - 2x|x_1| \cos\theta_1 + |x_1|^2 = x^2 + mx + n$$
$$F(x)/(x^2+mx+n) = Q(x) + ax + b$$
$$Q(x)/(x^2+mx+n) = Q'(x) + cx + d$$
$$\delta m = \frac{ad - bc}{d^2 - 2cdm + c^2n}$$
$$\delta n = \frac{bd - bcm + acm}{d^2 - 2cdm + c^2n}$$

Then a better factor of $F(x)$ than $x^2+mx+n$ is

$$x^2+(m+\delta m)x+(n+\delta n)$$

When $a$ and $b$ are zero as the result of several operations similar to those described above, then the quadratic factor $x^2+m'x+n'$ can be factorized to give an exact pair of conjugate zeros and the quotient $Q(x)$ obtained by dividing $F(x)$ by the exact quadratic factor can be manipulated to give the next largest pair of conjugate zeros.

# BIBLIOGRAPHY

(in alphabetical order of authors)


BARTLETT. *The Theory of Electric Artificial Lines and Filters*, Chapman & Hall. (*O.P.*)

BODE. "A Method of Impedance Correction", *B.S.T.J.*, Vol. 9, IV, Oct. 1930.

—— "A General Theory of Electric Wave Filters", *Journal of Mathematics and Physics*, Vol. 13, III, Nov. 1934.

BODE and DIETZOLD. "Ideal Wave Filters", *B.S.T.J.*, Vol. 14, II, April 1935.

BOOTH and SAYERS. "Production of Quartz Resonators for the London–Birmingham Coaxial Cable System", *P.O.E.E.J.*, Vol. 31, I, April 1938, Vol. 32, II, July 1939, and III, Aug. 1939.

BROAD and STANESBY. "Channel Filters employing Quartz Resonators", *P.O.E.E.J.*, Vol. 31, IV, Jan. 1938.

BURNS. "Manufacture of Quartz Crystal Filters", *B.S.T.J.*, Vol. 19, IV, Oct. 1940.

CAMPBELL. "Physical Theory of the Electric Wave Filter", *B.S.T.J.*, Vol. 1, II, Nov. 1922.

CAUER. "New Theory and Design of Wave Filters", *Physics*, Vol. 2, IX, April 1932.

CORKE, STANESBY and BROAD. "Calculation of Insertion Loss and Phase Change", *P.O.E.E.J.*, Vol. 35, III, Oct. 1942, and IV, Jan. 1943.

DARLINGTON. *Synthesis of Reactance Four-poles*, Bell Laboratory Monograph, B1186.

FELDTKELLER and STRACKER. "A Basis for a General Four-terminal Network Theory", *Electrische Nachrichtentechnic*, Vol. 6, III, 1929.

GUILLEMIN. *Communication Networks*, Vol. II, John Wiley & Sons.

HALSEY. "Design and Construction of Electric Wave Filters", I.P.O.E.E. Paper No. 147, Dec. 1932.

JOHNSON. *Transmission Circuits for Telephonic Communication*, Van Nostrand Co., Inc.

JOHNSON and SHEA. "Mutual Inductance in Wave Filters with an Introduction on Filter Design", *B.S.T.J.*, Vol. 4, I, Jan. 1925.

LAURENT. "Théorie et application pratique des demi-cellules à trois branches pour filtres électriques", *Ericsson Technics*, V, 1934.

—— "Recent Developments in Filter Technics", *Ericsson Review*, IV, 1935.

—— "Le filtre zig-zag—un nouveau filtre trouvé a l'aide des transformations fréquentielles", *Ericsson Technics*, I, 1936.

—— "Calcul général des affaiblissements des filtres à l'aide des transformations fréquentielles", *Ericsson Technics*, IV, 1937.

—— "New Principles for Practical Computation of Filter Attenuations by means of Frequency Transformations", *Ericsson Technics*, III, 1939.

LITTLE. " Electric Wave Filters ", I.P.O.E.E. Paper No. 143, Dec. 1931.

MASON. " Electric Wave Filters employing Quartz Crystals as Elements ", *B.S.T.J.*, Vol. 13, III, July 1934.

—— *Electro-mechanical Transducers and Wave Filters*, Van Nostrand Co., Inc.

NORTON. " Constant Resistance Networks with Applications to Filter Groups ", *B.S.T.J.*, Vol. 16, II, April 1937 ; U.S. patent 1,681,554.

READ. " Unbalance in Circuits ", *Phil. Mag.*, Sept. 1929.

SHEA. *Transmission Networks and Wave-filters*, Chapman & Hall.

STARR. *Electric Circuits and Wave Filters*, Pitman.

ZOBEL. " Theory and Design of Uniform and Composite Electric Wave Filters ", *B.S.T.J.*, Vol. 2, I, Jan. 1923.

—— " Transmission Characteristics of Electric Wave Filters ", *B.S.T.J.*, Vol. 3, IV, Oct. 1924.

—— Extension to the Theory and Design of Electric Wave Filters ", *B.S.T.J.*, Vol. 10, II, April 1931 ; U.S. patent 1,557,230.

(These articles, although appearing last in an alphabetical list of authors, must take first place when credit is given in the theory of electric wave filters.

*B.S.T.J.* *Bell System Technical Journal* (U.S.A.).

*P.O.E.E.J.* *Post Office Electrical Engineers' Journal* (G.B.).

*I.P.O.E.E.* *Institution of Post Office Electrical Engineers* (G.B.).

# INDEX

**(The references are to Sections)**


ADJUSTMENT
  of capacitors, 18.4.1
  of components in filters, 18.4.3
  of inductors, 18.4.2
Arithmetic progression, 1.5
Attenuating band, conditions for
  in ladder-type network, 5
  in lattice-type network, 17
Attenuation coefficient, image, 5
  template, 14

BALANCED filters, 18.1
  effect of unbalanced generator, and load on, 18.1
Balanced half-section network, 3
Band-pass filter
  band-width of, 11
  confluent, 11
  constant-$k$ half-section, 11
  design by insertion-loss method, 20.5
  dissipation in, 13
  impedance transformation in, 11.4
  $m$-derived half-section, 11.1
  $m_1m_2$-derived 6-element half-section, 11.2
  $m_1m_2$-derived 5-element half-section, 11.2.1
  $m_1m_2$-derived 4-element half-section, 11.2.2
  $m_1m_2$-derived 3-element half-section, 11.2.3
  parallel or series connection of, 15
  relationship between types of, 11.3
  templates applied to calculation of image transfer coefficient of, 14.1.3, 14.1.4
Band-stop filter
  band-width of, 12
  constant-$k$ half-section, 12
  design by insertion-loss method, 20.5
  dissipation in, 13
  $m$-derived half-section, 12.1
  templates applied to calculation of image transfer coefficient of, 14.1.5
Bridge network, Wheatstone, 2.1, 2.3
  application of to connection together of filters, 15

CALCULATION of image transfer coefficients by means of templates, 14
Capacitors, 18.3.1
  measurement and adjustment of, 18.4.1
Circular functions, 1.6.1
Coefficients of equations, relationship between roots and, 1.2
Complex numbers, 1.7
  examples on, 1.8
  use of in electrical calculations, 1.9
Components
  adjustment of, 18.4
  discussion on, 18
Configuration of filter, choice of, 18.5
  in insertion-loss design, 20.4
Confluent band-pass filter, 11
Constant-$k$ filter half-section, 4
  band-pass, 11
  band-stop, 12

Constant-$k$ high-pass, 10
low-pass, 9
Construction of filters, considerations on, 18
Crystal filters, 17.2
Current, 2.1
Cyclic currents (Maxwell), 2.3

DARLINGTON filter design method, 20
Decibel, 5
Derivation
$m$-, 6
mid-series $m$-, 6.1
mid-shunt $m$-, 6.2
$mm'$ (or double)-, 6.3
Derived half-section filter networks
band-pass $m$-, 11.1
band-pass $m_1m_2$-, 11.2
band-stop $m$-, 12.1
high-pass $m$-, 10.1
low-pass $m$-, 9.1
Determinants, 1.3
solution of simultaneous equations by means of, 1.3.1
Dissipation in filters, 13
allowance for, in insertion-loss design, 20.2

EQUATIONS
extraction of zeros of, 20.8
quadratic, 1.1
relationships between coefficients and roots of, 1.2
simultaneous, use of determinants in solution of, 1.3.1
Equivalent networks, 7
Examples
of complex numbers, 1.7
of filter design
band-pass, 16.2
high-pass, 16.1
low-pass, 16.1
low-pass designed by insertion-loss method, 20.7
parallel connection of filters
fractional termination, 16.3.1
impedance correction, 16.3.2
Exponential functions, 1.6

FILTER
examples of design of
band-pass, 16.2
high-pass, 16.1
low-pass, 16.1
low-pass designed by insertion-loss method, 20.7
parallel connection
fractional termination, 16.3.1
impedance correction, 16.3.2
wave, 5
(refer also to specific filter type)
Fractional termination for parallel or series connection of filters, 15.3.1
Functions
Circular, 1.6.1
exponential, 1.6
hyperbolic, 1.6.2
logarithmic, 1.6

GEOMETRIC progressions, 1.5

HALF-SECTION network, 3
basic, 3
constant-$k$, 4
mid-series $m$-derived, 6.1
mid-shunt $m$-derived, 6.2
$mm'$-derived, 6.3
(refer also to specific filter type)
Helmholtz theorem, 2.4
High-pass filter, 10
constant-$k$ half-section, 10
design by insertion-loss method, 20.5
dissipation in, 13
example of design of, 16.1
$m$-derived half-section, 10.1
parallel connection of low-pass filter and
example of fractional termination, 16.3.1
example of impedance correction, 16.3.2
parallel or series connection of low-pass filter and, 15
templates applied to calculation of image transfer coefficient of, 14.1.2

IMAGE
attenuation coefficient, 5
attenuation coefficient template, 14
impedance, 3
impedance, curves for, 14.2
phase-shift coefficient, 5
phase-shift coefficient template, 14
transfer coefficient, 3
Impedance, 2.1
correction for parallel or series connection of filters, 15.1
correction for parallel or series connection of filters, example, 16.3.2
image, 3
image, curves for, 14.2
Inductors, 18.3.2
air-cored, 18.3.2.1
dust-cored, 18.3.2.2
laminated-cored, 18.3.2.2
Insertion
characteristics of, of lattice-type filter, 17.3
loss, 8
loss design method, 20
loss, example of calculation of, 16.4
loss, measurement of, 19
phase-shift, 8
phase-shift, example of calculation of, 16.4
phase-shift, measurement of, 19

KIRCHHOFF'S laws, 2

LADDER-TYPE network, 3
(refer also to specific filter types)
Lattice-type network, 17
Cauer, 17.1
crystal, 17.2
insertion characteristics of, 17.3
Logarithmic functions, 1.6
Loss, insertion, 8
example of calculation of, 16.4
measurement of, 19
Low-pass filter, 9
constant-$k$ half-section, 9
design by insertion-loss method, 20.1 *et seq.*
Low-pass dissipation in, 13
example of design by insertion-loss method, 20.7
example of design of, 16.1
$m$-derived half-section, 9.1
template applied to calculation of image transfer coefficient of, 14.1.1

$m$-DERIVATION
band-pass, 11.1
band-stop, 12.1
high-pass, 10.1
low-pass, 9.1
mid-series, 6.1
mid-shunt, 6.2
$mm'$-derivation, 6.3
$m_1m_2$-derivation, band-pass filter, 11.2
6-element half-section, 11.2
5-element half-section, 11.2.1
4-element half-section, 11.2.2
3-element half-section, 11.2.3
Mid-band frequency
band-pass filter, 11
band-stop filter, 12

NEPER, 5
Network, equivalent, 7
Network, Wheatstone bridge, 2.1, 2.3

ORCHARD, modification of Darlington's method, 20.6

PARALLEL connection of filters, 15
example of design of
fractional termination, 16.3.1
impedance correction, 16.3.2
Pass-band, conditions for
in ladder-type network, 5
in lattice-type network, 17
Phase-shift
example of calculation of insertion, 16.4
image coefficient, 5
insertion, 8
measurement of insertion, 19

Potential difference, 2.1
Progressions, arithmetic and geometric, 1.5

QUADRATIC equations, 1.1

RADIAN, 5
Resistance, 2.1
Roots of equation, relationship between coefficients and, 1.2
  extraction of, 20.8

SERIES connection of filters, 15
Simultaneous equations, 1.3.1
Susceptance annulling network for, parallel connection of filters, 15
  example of design of, 16.3.2

TEMPLATES applied to calculation of image transfer coefficients, 14
  of band-pass filters, dis-symmetrical, 14.1.4
  of band-pass filters, symmetrical, 14.1.3
  of band-stop filters, 14.1.5
  of high-pass filters, 14.1.2
  of low-pass filters, 14.1.1
Thévenin's theorem, 2.4
Transformation, impedance, applied to band-pass filter, 11.4

UNBALANCED filter, 18.2
  earthing methods in, 18.2
  effect of earth currents on, 18.2
Unbalanced half-section, 3

WHEATSTONE bridge network, 2.1, 2.3

DATE OF ISSUE

30 OCT

This book must be returned within 3, 7, 14 days of its issue. A fine of ONE ANNA per day will be charged if the book is overdue.