HANDBOOK ON DESIGNING FOR QUANTITY PRODUCTION

PRODUCT DEVELOPMENT SERIES

TEXTS AND REFERENCE WORKS OUTLINED
BY THE FOLLOWING COMMITTEE

K. H. CONDIT, *Chairman and Consulting Editor*
Dean, School of Engineering, Princeton University.

E. P. BULLARD
President of The Bullard Company.

G. M. EATON
Sales Engineer of Spang, Chalfant, Inc.

FRANCIS C. FRARY
Director, Aluminum Research Laboratories, Aluminum Company of America.

F. V. LARKIN
Director, Industrial Engineering and Mechanical Engineering, Lehigh University.

O. A. LEUTWILER
Professor of Mechanical Engineering Design and Head of Department of Mechanical Engineering, University of Illinois.

F. C. SPENCER
Manufacturing Engineer, Western Electric Company.

Handbook on Designing for Quantity Production

Prepared and Edited

BY

HERBERT CHASE

FIRST EDITION

Fourth Impression

McGRAW-HILL BOOK COMPANY, INC.
NEW YORK AND LONDON
1944

HANDBOOK ON DESIGNING FOR QUANTITY PRODUCTION

PRINTED IN THE UNITED STATES OF AMERICA

TO MY WIFE
CARINEL
who sacrificed much in companionship
that this work might be completed

PREFACE

Design of virtually every product intended for manufacture in large quantities and involving the use of metals or plastics must be predicated upon having some or all of the parts required produced by one or more of the high-production processes: stamping, sand casting, die casting, screw machine, die forging, heading, or plastic molding. Otherwise, the product cannot be manufactured with maximum economy and is likely to be displaced by some similar product in which full advantage is taken of these highly developed processes.

It follows that every engineer engaged in design, as well as those employed in styling products to be produced in quantity, should know how to design the product as a whole and its various parts so that they lend themselves, as far as conditions permit, to ready manufacture by quantity-production methods. Engineering and other designers should have at least a general knowledge of the processes themselves and should know in detail how to design in such a way as to take full advantage of the economies of these processes as well as how to avoid types of construction that increase cost unnecessarily.

It is the purpose of this book to provide engineers, engineering students, and others interested in design of the type referred to above with as much practical information on designing for quantity production as can well be compressed within a volume of this size. The authors of the various chapters are or have been intimately associated with work involving their respective subjects and are ranked as authorities on these subjects. They are not only familiar with the latest methods of production but are in frequent contact with shops that employ high-production methods as well as with other engineers engaged in design for production in large quantities. They know well what designers of items intended for production by the methods dealt with should do and should avoid doing if the parts designed are to be produced to best advantage.

This book is intended not only for reference by engineers already engaged in design, but also for use by students of engineering who must understand practical considerations relating to production before they can apply the theory of design with optimum economic results. It is intended that the book be used as a textbook, partly because no student of engineering can hope to become a practical designer of products for quantity production until he gains at least a working knowledge of those facts of which he must take advantage if such products are to be manufactured economically.

In making numerous contacts with designers of widely diversified products manufactured in quantity, the editor of this book (who is also author of several of its chapters and of numerous articles dealing with products covered in the remaining chapters) has found that many designers well versed in one or two types of production employ these types more or less to the exclusion of other types. Often, through habit, they think chiefly in terms of one or two types of production and unwittingly pass up economies that could be gained if they used to advantage such basic facts about other high-production products as are here given. Evidently, then, this book should prove helpful even to advanced designers who wish to profit by supplementing their knowledge of certain types of design with facts about other types.

Production men, especially those who are in frequent contact with designers, also can benefit by using the book to point out how, in specific instances, designers are failing to design for maximum economy. If used to full advantage, the book will help greatly toward avoiding the redesign so often necessary in adapting products, supposedly ready for manufacture, to actual economical production. Such use will not only help to gain economies in the production itself but will save on tooling costs and in the time of many individuals who otherwise have to correct faults in design that could have been easily avoided by proper design for rapid production in the first instance.

Specific rules for design are given in seven of the chapters constituting Part I. The reasons for each rule are explained, and there are ample illustrations to indicate how the rules are applied. In this respect, the book may be regarded as unique in its field, for it has usually been considered that it is impossible to formulate such rules or that, if formulated, they would prove either too general to be useful or, if made specific, would involve too many exceptions. The authors have not only formulated rules but regard them as being exceedingly useful. They are well aware that no such rules can be considered as unvarying in their application and that exceptions are often necessary. If, however, the designer strives to follow the rules given and checks his design against them when it is progressing or nearing completion, the resulting product will lend itself better to rapid and economical mass production than if the rules are not followed.

All designs for quantity production involve compromises between what may be termed "ideal" and what it is practical to accomplish with reasonable or maximum economy. Although the designer must seek to design a part or a product that will perform the function for which it is intended, he should realize that it will have little value for manufacture in quantity unless it can compete with other products. To do so, it should be designed for production at minimum or at least at moderate cost. With this second phase of design the book deals in what is believed to be a highly practical way.

In Part II, various types of products manufactured in quantities at moderate or minimum cost are compared, one against the other, partly because it is often impossible to say, in advance, which type of product is likely to prove lowest in cost and most acceptable in other respects, without first making a comparison under several specific headings. Such comparisons are made, with actual production costs in many instances, and tabular comparisons are given, some general and some specific. A study of these chapters, it is believed, will be exceptionally helpful in choosing the type of design likely to be best adapted for economical manufacture in particular instances.

HERBERT CHASE.

FOREST HILLS, N.Y.,
December, 1943.

CONTENTS

PAGE

PREFACE vii

CHAPTER

PART I

I. DESIGN OF DIE CASTINGS 1

HERBERT CHASE

Associate Editor of *Aviation*, assigned to *Wings;* Consultant and journalist; member; of Society of Automotive Engineers; former Associate Editor, *Product Engineering* and *American Machinist* and former Engineering Editor of *Automotive Industries;* former Assistant Secretary and Treasurer, Society of Automotive Engineers; former Laboratory Engineer and Chief Engineer, Automobile Club of America; author of "Die Castings" and of numerous articles on the design and production of die castings and of many other metal products, plastics, etc., in American and British engineering and metalworking publications.

II. DESIGN OF SAND CASTINGS FOR QUANTITY PRODUCTION 67

N. F. HINDLE

Assistant Secretary American Foundrymen's Association.

III. DESIGN OF SCREW-MACHINE PRODUCTS 133

D. H. MONTGOMERY

Vice President in Charge of Engineering, New Britain Gridley Machine Company.

IV. DESIGN OF STAMPINGS 175

RALPH A. WAGNER

Chief Tool Designer for Consolidated Aircraft Corp., San Diego, California; formerly with Stinson Aircraft, division of Vultee Aircraft, Inc., Wayne, Michigan; Truscon Steel Co. and the Cleveland Trade School of Cleveland, Ohio.

V. DESIGN OF DIE FORGED PARTS FOR QUANTITY PRODUCTION . . 231

CHARLES L. TUTT, JR.

Assistant Professor of Mechanical Engineering, Princeton University; member of American Society of Mechanical Engineers; Secretary and Staff Assistant, Production Engineering Division of A.S.M.E.; member of Society of Automotive Engineers; former Chassis Unit Engineer, Buick Motor Division, General Motors Corporation.

VI. NOTES ON AND ACCOMPLISHMENTS IN HOT HEADING 290

A. E. R. PETERKA

Technical Assistant to the President of Lamson & Sessions Company, on leave; Lieutenant Colonel in the United States Army Air Corps, Chief, Matériel Distribution Branch, Production Division.

VII. NOTES ON THE DESIGN OF COLD-HEADED PARTS 305

HERBERT CHASE

PART I

CHAPTER I

DESIGN OF DIE CASTINGS[1]

By Herbert Chase

Die Castings Defined.—Die castings are the products secured by forcing a molten alloy into a metal mold, called a "die," under pressures commonly ranging from 400 to 20,000 psi. Such castings are occasionally referred to as "pressure castings," a term that has not gained general acceptance, although it is sometimes applied to castings produced in so-called "cold-chamber" machines (see Methods of Producing Die Castings, p. 4). In England the term "die castings" is applied to castings produced in metal molds, whether cast under applied pressure or under gravity head. In the United States, it is customary to refer to castings produced in metal molds *under gravity head* as "permanent mold" or "semipermanent mold" castings as distinct from die castings produced under much higher pressure. As used in this book, the term "die castings" includes only the type cast in metal dies under pressures many times greater than gravity head.

Dies used in producing die castings are, in reality, a form of mold and often take the place of sand molds, but as the term "die" is commonly accepted, it is here employed. As a die is a device for shaping metal and a die for die casting performs that function, use of the term "die" rather than "mold" is not without justification.

Importance of Die Castings.—Within the past two decades, die castings have become of great industrial and engineering importance. This is largely because they are capable of exceedingly rapid production at low cost and within closer dimensional limits than are other types of castings. In general, strength

---

[1] Published originally, in condensed form, in *Product Engineering*.

and most other significant physical properties compare favorably with those of gray iron and of most nonferrous castings and surface smoothness is commonly much better. In recent years, the alloys available have been increased in number and in quality. Casting facilities and technique have also been rapidly improved. Sources of supply have multiplied, too, and are to be found in almost every important metalworking center. There has been a parallel improvement in methods of machining and of finishing die castings. The net outcome is a sizable and growing die-casting industry and the general acceptance of die castings for a wide range of uses.

It is not unusual for die castings to supplant sand castings, stampings, screw-machine products, and plastic moldings for certain classes of applications, though each of these products has its own peculiar merits. Choice often hinges upon relative costs, which not infrequently favor the die casting. It is true, however, that the die-casting industry is more than holding its own in highly competitive fields of quantity production and that die castings deserve and are likely to receive consideration wherever their properties and availability are such as to meet requirements.

Reasons for Using Die Castings.—Die castings are selected in preference to products made by other means when they yield the most favorable combination of properties, appearance, and cost. Minimum cost is often the paramount consideration but such factors as strength, impact resistance, weight, resistance to corrosion, appearance, and ease of holding relatively close dimensions have a marked effect upon choice.

Basically, die casting possesses most of the advantages of other forms of castings plus certain additional advantages. A primary advantage is that the die retains its shape and size over a long period of production during which many thousands of substantially identical castings are or can be made; it is not necessary, as with sand castings, to make up a new mold and new cores every time a casting or gate of castings is produced. Section thickness can be varied to meet most conditions, as with sand castings, but sections can be much thinner than the minimum for sand castings, coring can be more intricate and more accurate and dimensions closer and surface smoothness superior. Die cost, however, is considerable and cores must be of such shape as to permit ready withdrawal, since the core does not disintegrate as with sand cores. The maximum size feasible is far below that for sand castings, however, and only nonferrous alloys have proved suitable for die casting. Speed of production is far higher for die castings than for sand castings but, as a rule, involves more expensive equipment.

A more comprehensive comparison with sand castings and with other quantity-production products is given in other chapters and does not invariably favor die casting, since there are many conditions under which die casting does not meet certain requirements that can be met by other quantity-production methods. In general, however, the reasons for using die castings include one or more of the following:

1. Low over-all cost per piece.
2. High rate of production.
3. Adaptability to production where marked variation in section thickness is essential.
4. Producibility in relatively thin sections.
5. Ability to hold relatively close dimensional limits, as cast.
6. Ease of coring, including the use of small cores and cored holes held within comparatively close dimensional limits.
7. Excellence of surface smoothness.
8. Requirement of comparatively little machining, only light cuts being necessary when needed at all.
9. Adaptability to almost unlimited shapes and to pleasing contours, without expensive supplementary operations.
10. Relatively good corrosion resistance.
11. Uniformity in size throughout the life of the die.
12. Relative ease of finishing, including electroplating and organic coating.
13. Light weight as compared with most alternative metal products.
14. Higher strength-weight ratio than for most cast products.
15. Adaptability to integral "self" fastening devices and to the inclusion of inserts of wrought metals and of other materials.
16. Ease of machining with favorable effect on tool life.
17. Moderate casting cost as compared with several other quantity-production products.

These reasons are not all-inclusive, are not secured in equal degree by all types of die castings, are subject to certain exceptions, and, in several instances, are not exclusively applicable to die castings. The list is sufficiently impressive to indicate why die castings have gained a merited place as one type of product well suited to extensive use, especially where production in medium to large quantities is required.

Methods of Producing Die Castings.—All die castings, as here defined, are produced by applying pressure to molten alloy and thus forcing it into a die that gives the casting its shape. The pressure can be applied by compressed gas (usually air) but the preferred method is by using a ram, generally actuated by pneumatic or by hydraulic means. In the early days of die casting, air pressure directly on the metal was commonly employed, using what is generally called a "gooseneck" machine. Today, such machines have nearly disappeared in American die-casting plants, except for the die casting of aluminum alloys, and this use is decreasing in favor of the so-called "cold-chamber" machine, which applies higher pressures and yields denser castings. Direct air injection is limited as a practical matter to about 550 psi maximum and has the disadvantage that the molten alloy stands in contact with iron or steel, which aluminum alloys tend to dissolve. This tendency results in high maintenance cost on the machine and also in increased iron content in the alloy, which is adversely affected if the iron exceeds that permitted in the usual specifications. In addition, aluminum alloy cannot be permitted to stand in contact with a ram and its cylinder, as the ram would stick. These drawbacks are avoided to a large extent by using a cold-chamber machine, in which the chamber is a cylinder into which the alloy is ladled in a quantity sufficient for only one die filling. The ram fitting the cylinder is then instantly advanced under high pressure, forcing the alloy into the die, where it freezes quickly. Because contact with the cylinder and plunger is only momentary, excessive pickup of iron is avoided.

Cold-chamber machines are employed not only for aluminum, but are essential for magnesium and for copper-base (brass) alloys. Excellent castings are produced, although hand ladling is rather slow and usually requires extra labor. In addition, the pressures needed commonly run from 6,000 to 20,000 psi, necessitating a heavy and expensive machine having hydraulic accessories that are not low in first cost and tend to increase operation and maintenance costs, although these usually can be held within moderate limits.

By far the largest proportion of die casting in recent years has been done with plunger machines using zinc alloys, largely because these alloys are low in cost, have favorable properties, are easy to cast, and yield excellent castings with moderate (usually lowest) over-all costs. Plunger machines are used in continuous contact with the zinc alloy, the cylinder being submerged in the molten alloy. This is possible because modern zinc alloys do not attack or dissolve iron or steel in significant degree and zinc alloy does not cause a ram to seize. Most plunger machines operate at or below 2,000 psi, as little or no advantage has been found to result from higher pressures.

Satisfactory die castings for many purposes, especially in aluminum alloys, are secured with direct air-injection machines that one man can operate, but separate high-pressure air-compressing equipment is needed, and the tendency has been toward cold-chamber machines, especially for castings of small to medium size, as sounder castings commonly result, especially where a die of proper design is employed. Though cold-chamber machines can be used for zinc alloy, there is little occasion to use them, as the plunger machine can be made to apply as much pressure as required, and the need for ladling, in the cold-chamber type of machine, merely slows the operation as compared with a conventional plunger machine designed for zinc alloy.

Within certain size and weight limitations, the type of die-casting machine used concerns the designer of the *casting* only to such an extent as it may affect soundness, strength, and finish of the castings produced. This is a matter to be considered in choosing the die caster or in drawing the specifications that he must meet. In some cases, however, the alloy chosen dictates the type of machine employed.

When to Use Die Castings.—As with other products covered in this book, the die casting should be chosen only when (1) it fulfills the physical, mechanical, and other requirements imposed and (2) cost is below that for other products meeting the same requirements. Naturally, the die casting is chosen only when size and weight limitations are such as can be met by the equipment available. These limits are given approximately for different alloys in Table I, but there are special cases in which castings outside these limits have proved feasible. In other words, the limits are only a general, not a fixed, guide. The die casting has proved most useful in small- to medium-sized parts, from a fraction of an ounce to a few pounds in weight, but there are instances in which large sizes have been found both economical and highly successful. Such cases should be considered with special care and with due regard to other possible methods of production; there are, for example, many cases in which sand castings, stampings, and forgings much larger than it would be feasible to die cast can be used effectively.

TABLE I.—APPROXIMATE DIMENSIONAL LIMITS FOR DIE CASTINGS IN VARIOUS ALLOYS

	Zinc alloy	Aluminum alloy and magnesium alloy	Copper alloy (brass)
Minimum wall thickness, large castings, in.	1/16	0.085	1/8
Minimum wall thickness, small castings, in.	0.030	0.050*	0.050
Variations from drawing dimensions, *per in.* of length or diameter min., in.†	0.001‡	0.002§	0.003‡
Cast threads, external, max. number per inch	24	20*	10
Cast threads, internal, max. number per inch	24‖	None	None
Cored holes, min. diam., in.	0.030	3/32	3/16
Draft per inch of length or diameter of cores, min., in.	0.003	0.015	0.020
Draft per inch of length or diameter at side walls, min., in.	0.005	0.010	0.020

* Small aluminum die castings having walls only 0.040 in. thick have been produced in quantities, as have been also some threads as fine as 24 per inch.

† Applies only to dimensions between points formed by solid portions of die. When dimension is across parting or between points controlled by parts of die having relative motion, wider limits must be allowed.

‡ Depends upon conditions.

§ As close as for zinc alloys in certain instances. Shrinkage, as with other types of castings, cannot always be predicted within close limits, but, once determined for a particular casting, close limits can often be set and held subsequently.

‖ If cheaper than tapping. Fine internal threads are nearly always tapped.

The choice between die casting and other methods suited for quantity production often hinges upon the cost of the die needed, although there are many cases in which die cost is less than, for example, corresponding stampings, forgings, and plastic moldings. Dies for castings frequently cost less than is generally supposed, and there are many instances in which the savings brought about by die castings are sufficient to amortize the die and make it a good investment when a thousand or even a few hundred castings are all that the die is expected to make. This is especially true in many cases where a sand casting, for example, would cost so much to machine that the cost per piece would be very high even though the sand casting itself were moderate in cost. In such cases, it pays handsomely to put machining expenditures into the die and, by thus obtaining castings very close to the required size, save much on each casting in machine work.

Even though the known quantity of castings required may not yield a saving in machining sufficient to offset die cost completely, it may still be a good plan to consider die casting the piece for, if reorders are made, the saving soon mounts up and, after the die cost is once amortized, every further casting adds materially to the over-all saving realized. If, on the other hand, a sand casting is chosen, every one produced requires a certain machining expense, no matter how many ultimately may be needed.

Some die castings are used with no machining required except for flash removal, but, even when machining must be done, cuts are always light and most die-casting alloys are easy to machine. Many holes can be cored to size while, in sand castings, holes below $\frac{3}{4}$ in. diameter are seldom cored unless very shallow.

Section thickness must also be borne in mind, since much thinner sections are often feasible in die castings than in sand castings. Of similar importance is the matter of surface smoothness, which almost invariably favors the die casting over a sand casting. The latter must always be ground to secure a surface suitable for plating or even for really smooth enameling, but the die casting, if properly made, usually can be so smooth, at least on critical surfaces, that only a buffing is needed before plating, and, for most enameling, a good die casting requires no buffing or grinding to yield a finish of required smoothness. This is an important consideration, for it is not at all unusual for the finishing to cost more than the casting, especially if the casting is a rough one.

Where weight is a factor, a stamping *may* be somewhat lighter than a die casting, but not always, because in die casting the weight can generally be put where needed, whereas the stamping must usually be of nearly uniform thickness throughout.

As to dimensional accuracy, the die casting (as cast and without machining) is usually produced with less variation in dimensions than the stamping and almost invariably less than the sand casting, the die forging, or the plastic molding.

All these factors are significant and many of them are of vital importance, in respect to over-all cost. All should be weighed when determining which product to use when conditions permit a choice. The die casting is not without its limitations, however. It can rarely compete in strength, for example, with a wrought part of steel and it is softer than many ferrous alloys, besides costing (usually) more per pound, at least in the as-cast condition. The die casting may have, in common with most castings, some porous sections and some types are subject to creep.

Alloys for Die Casting Compared.—There are a score or more of nonferrous alloys suitable for die casting, but the number in extensive use does not exceed ten. Zinc alloys have long seen widest application. They account for about 75 per cent of the total tonnage of die castings produced in normal times. By far the largest part of the remainder is in aluminum alloys. Many die casters, including some of the largest, do casting only in zinc alloys, and only a relatively small number cast any except zinc and aluminum alloys. Still fewer cast the copper-base or magnesium-base alloys in the United States. Though magnesium alloys have been gaining considerably where minimum weight is desired, the total output is only a small fraction of that in aluminum alloys, which are employed when light weight, though not the lightest, is desired.

Table II gives the order of importance or of merit of all the foregoing types of die castings under various headings but does not list tin-base or lead-base die castings, as they have only slight commercial importance. They cast readily but are low in strength and rank higher in cost than zinc and aluminum, hence are employed only in a few special cases, chiefly where certain types of corrosion resistance or high density are essential. Copper-base (brass) die castings rank highest in strength but are also high in cost. For this reason, their use is confined chiefly to applications in which maximum strength or corrosion resistance is required.

TABLE II.—DIE-CASTING COMPARATOR

Selection factor	Aluminum alloys A.S.T.M. 5, 7, 12	Copper alloys (brass)	Magnesium alloys A.S.T.M. 12 and 13	Zinc alloys A.S.T.M. 21, 23, 25
Mechanical properties:				
Tensile strength	3	1 (strongest)	3	2
Impact strength	3	1 (toughest)	3	2
Elongation	4	1 (most ductile)	3	2
Dimensional stability	2	1 (most stable)	3	3[*]
Resistance to cold flow	2	1 (most resistant)	2	3
Brinell hardness	3	1 (hardest)	3	2
Physical constants:				
Electrical conductivity	1 (highest)	2	3	2
Thermal conductivity	1 (highest)	2	4	3
Melting point[†]	2	3 (highest)	2	1 (lowest)
Weight, per cu. in.	2	4	1 (lightest)	3
Casting characteristics:				
Ease, speed of casting	2	3	2	1 (easiest)
Maximum feasible size	1	2	1	1
Complexity of shape	1	2	1	1
Dimensional accuracy	2	3	2	1 (most accurate)
Minimum section thickness	2	3	2	1 (thinnest)
Surface smoothness	2	3	2	1 (smoothest)
Cost:				
Die cost[‡]	2	3	2	1 (lowest)
Production cost	2	3	2	1 (lowest)
Machining cost	2	3	1	1
Finishing cost[§]	3	2	3	1 (lowest)
Cost per piece[‖]	2	3	2	1 (lowest)
Extent of use	2	4	3	1 (most used)

[*] Through the use of a low-temperature annealing, alloy 23 can be made virtually stable in dimensions.

[†] A low melting point is favorable in reducing die cost and upkeep and facilitates casting.

[‡] Dies for casting the low melting-point alloys are least expensive and have longest life.

[§] Includes polishing and buffing expense as well as ease of applying all types of commercial finishes, both electrodeposited and organic.

[‖] Based on die, material, and fuel costs, production speed, and machining and finishing costs.

Zinc die castings (see Table II) have attained widest use because they cast easily at moderate temperatures, are usually lowest in cost per casting, and have mechanical properties superior in most respects to all other die-casting alloys except those based on copper. Remarkably smooth finishes are secured, often so smooth that only buffing is needed to permit plating,

Typical die castings in zinc alloy including, *top*, a base for an automatic phonograph record changer and the frame and aprons for a washing-machine wringer; *second row*, base for a hydraulic jack, capable of withstanding high pressures; a one-piece cage-type blower rotor with integral three-step V-groove pulleys; and a housing for a gasoline pump; *third row*, motor end frame with recess and bearing bosses for a gear reducer, a slide fastener the tiny elements of which are die cast on the edge of a tape, and a nine-step spur gear, all teeth being cast; *bottom row*, a clock case no thicker than if made as a drawn stamping, a box of button shanks, of which there are 4,100 in a pound, and a radio chassis with numerous mounting bosses and compartments. The range in size is representative and section thickness of castings shown varies from about 0.030 in. to about 3/8 in. (*Courtesy of The New Jersey Zinc Co.*)

which is easily and rapidly accomplished and is done on a large scale. The moderate casting temperature makes for long die life, for low die costs, and for low casting costs. Ready adaptability to rapid casting in plunger-type machines is also an asset. Under such circumstances, and especially where minimum cost is desirable, the chief reasons for the commercial existence of other die-casting alloys than the zinc type lie in their possession of certain special properties. Light weight is a primary asset of aluminum and magnesium, and high strength and hardness are important reasons for the use of copper-base alloys. Some aluminum alloys take and hold a high polish for long periods without plating whereas zinc alloys, though capable of taking a similar polish, tarnish unless plated or lacquered.

Table III gives in detail the properties of zinc alloys. Their moderate melting point is an advantage but precludes, in general, their use at temperatures above 300°F.

There are standard specifications for three zinc alloys, and of these only two, Zamak 3 and Zamak 5, are now in extensive use. All three contain 4 per cent of aluminum and 0.03 per cent of magnesium. Aluminum prevents the zinc from attacking (dissolving) iron and steel and avoids the sticking of plungers in plunger-type machines. It also improves casting and physical properties. The use of a small percentage of magnesium is specified in the zinc alloys because of the beneficial effect it has in making the castings permanently stable.

In all zinc alloys, iron content should be kept below 0.10 per cent and other impurities below the very small maximum figures given in Table II. If the lead, tin, or cadmium content exceeds the limits given, castings become subject to considerable dimensional changes and to intergranular corrosion if exposed to warm, moist temperatures. For this reason, responsible die casters take precautions to keep the impurities within the limits named and purchasers should see that specifications are rigidly followed, even though this requires spectrographic analysis.

All zinc alloys are subject to slight contraction subsequent to casting, followed by a slight expansion over a long period. These changes for standard alloys are so slight, however, that they rarely need be considered by the designer, as Table III indicates, and, when significant, can be hastened by a stabilizing heat-treatment. The accompanying changes in physical properties

TABLE III.—COMPOSITION AND PROPERTIES OF ZINC ALLOYS FOR DIE CASTING

Designation:			
A.S.T.M.	XXI	XXIII	XXV
S.A.E.	921	903	925
The New Jersey Zinc Company	Zamak 2	Zamak 3	Zamak 5
Composition,* % by weight:			
Copper	2.5–3.5	0.10 max.	0.75–1.25
Aluminum	3.5–4.5	3.5–4.3	3.5–4.3
Magnesium	0.02–0.10	0.03–0.08	0.03–0.08
Iron, max	0.100	0.100	0.100
Lead, max	0.007	0.007	0.007
Cadmium, max	0.005	0.005	0.005
Tin, max	0.005	0.005	0.005
Zinc (99.99 + % purity)	Remainder	Remainder	Remainder
Mechanical† properties:			
Charpy impact strength, ft.-lb., ¼- by ¼-in. bar, as cast	20	20	20
Charpy impact strength, ft.-lb., ¼- by ¼-in. bar, after 8 years indoor aging	2	25	19
Tensile strength, psi, as cast	47,900	40,300	45,400
Tensile strength, psi, after 8 years indoor aging	49,400	34,400	37,200
Elongation, % in 2 in. as cast	5	5	3
Elongation, % in 2 in. after 8 years indoor aging	2	8	5
Expansion (growth), in. per in. after 8 years indoor aging	0.0016	0.0001	0.0001
Other properties† and constants (as cast):			
Brinell hardness	83	74	79
Compression strength, psi	93,100	60,500	87,300
Electrical conductivity, mhos per cm. cube at 20°C	146,000	157,000	153,000
Melting point, °C	379.5	380.9	380.6
Melting point, °F	715.1	717.6	717.1
Modulus of rupture, psi	116,000	95,000	105,000
Shearing strength, psi	45,800	30,900	38,400
Solidification point, °C	379.3	380.6	380.4
Solidification point, °F	714.7	717.1	716.7
Solidification shrinkage, in. per ft	0.15	0.14	0.14
Specific gravity	6.7	6.6	6.7
Specific heat, cal./(gm.)(°C.)	0.10	0.10	0.10
Thermal conductivity, cal./(sec.)(cm. cube)(°C.)	0.25	0.27	0.26
Thermal expansion per °C	27.7×10^{-6}	27.4×10^{-6}	27.4×10^{-6}
Thermal expansion per °F	15.4×10^{-6}	15.2×10^{-6}	15.2×10^{-6}
Transverse deflection, in.	0.22	0.27	0.16
Weight, (lb.) per cu. in.	0.24	0.24	0.24

---

* Composition as provided in A.S.T.M. and S.A.E. specifications. The Zamak alloys meet these specifications but are held within closer tolerances as to composition than those specified.

† Properties and constants are as determined on standard test specimens die cast in Zamak alloys by the New Jersey Zinc Company. Values for impact strength, tensile strength, and elongation, as cast, are well above the minimum A.S.T.M. and S.A.E. requirements.

are also only of slight significance in the two alloys most widely used. They are significant, however, for Zamak 2 alloy, containing 3 per cent of copper, but the use of this alloy is decreasing, and it need never be employed when the changes involved are of moment.

Zinc alloys are subject to some cold flow (creep) at atmospheric temperatures, but this rarely need be considered unless high bending stresses are involved. Impact strength is high for a cast metal at normal room temperatures. It decreases considerably at low temperatures, though even then it is above that for most alloys. Millions of zinc-alloy die castings are used yearly on automobiles operated under low temperatures, however, yet breakage of these castings is rare. Zinc alloys are not recommended for use in contact with steam and are subject to the formation of white corrosion products when used without coating in contact with water. Such corrosion can be minimized by simple chemical treatment and is substantially eliminated by common finishes of proper thickness.

Zinc alloys cost less per pound than aluminum alloys, but the lower density of the latter (and also of magnesium alloys) may make the cost per unit of volume favor the lighter alloys in certain cases. This has been offset in most instances by higher casting costs for aluminum and magnesium and is affected also by the relatively higher strength and sometimes by the lower minimum section thickness that can be attained with zinc alloys.

Aluminum alloys make excellent die castings. These alloys can be cast, as a rule, in shapes and sizes duplicating those of zinc alloys. Strength, except in impact (see Table IV), is not far below that of the zinc alloys and is adequate for a wide range of parts. Light weight is a pronounced asset in most applications of aluminum alloys and has always been the most important single factor favoring their use. The alloys containing nickel take a brilliant polish and hold it in ordinary atmospheres for long periods without an applied finish, though tarnishing and surface corrosion occur in time. Resistance of aluminum alloys to corrosion is often called high but this depends on the character of exposure and, to some extent, on the particular alloy chosen (much as for the alloys of most base metals). Some alloys machine readily. Others, especially those high in silicon, are harder to machine.

The aluminum alloys cast at 1100 to 1300°F., or about 400° above temperature for zinc alloys. This is an advantage only

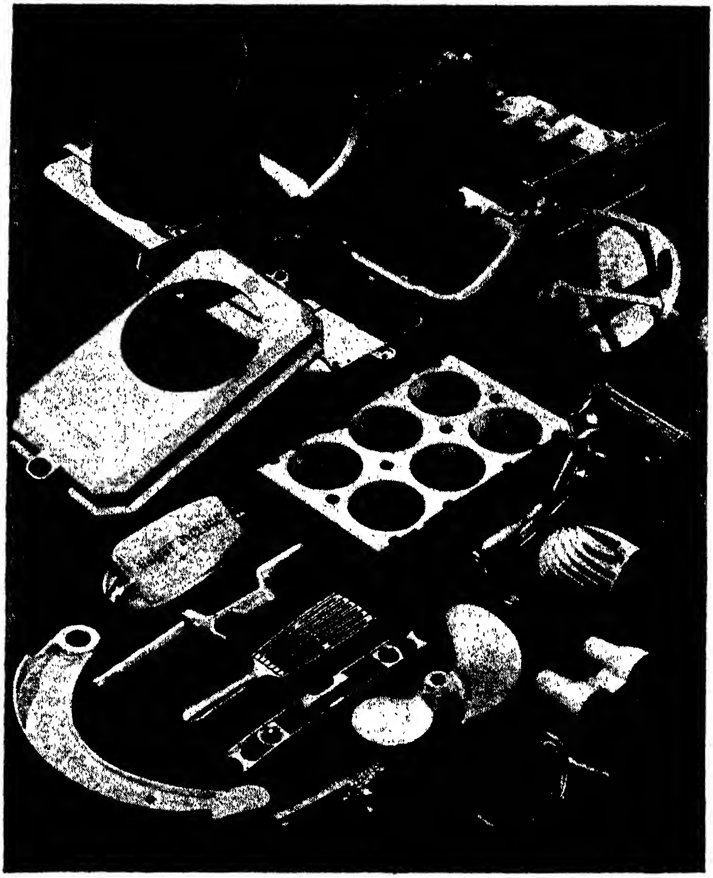

Representative group of aluminum die castings including: *top row*, traffic-light shield, assembly of die-cast typewriter parts, and cradle for a surveyor's transit; *second row*, meter box with cover, commercial baker's cupcake pan, a fruit-juice squeezer; smaller castings include: aircraft-engine cover plate, fishing-rod handle, hairbrush back, frame for carpenter's level, propeller for outboard motor, opera-glass frame, brake shoe, tea-kettle spout, and fender step plate. These castings are characterized by light weight, many being in quite thin sections. Some are for outdoor exposure and some for contact with foods. (*Courtesy of Aluminum Company of America.*)

when applications involve temperatures above those permissible with zinc alloys. It is a marked disadvantage in respect to die life and casting costs. Casting is slower and more expensive

TABLE IV.—COMPOSITION AND PROPERTIES OF ALUMINUM ALLOYS FOR DIE CASTING

Designation:									
A.S.T.M.	IV	V	VI	VII	VIII	IX	XI	XII	
S.A.E.	304	305	....	307	....	309	....	312	
Aluminum Co. of America (Alcoa)	43	13	83	85	....	93	....	81	218
Composition, %:*									
Copper	0.6 max.	0.6 max.	1.5 to 2.5	3.5 to 4.5	1.0 to 2.0	3.5 to 4.5†	1.0 to 3.0‡	6.0 to 8.0‡	
Silicon	4.5 to 6.0	11.0 to 13.0	2.5 to 3.5	4.5 to 5.5	0.5 to 1.0	1.0 to 2.5†	7.0 to 9.0‡	3.5 max.‡	
Nickel	0.5 max.	0.5 max.	0.5 max.	0.5 max.	1.75 to 2.5	3.5 to 4.5†	0.5 max.	0.5 max.	
Aluminum	Rem.	Rem.	Rem.	Rem.	Rem.	Rem.	Rem.	Rem.	Rem.
Iron, max.	2.0	2.0	2.5	2.3	2.0	1.8	2.0	2.3	
Zinc, max.	0.5	0.5	0.8	1.0	0.5	0.8	0.5	1.8	
Manganese, max.	0.3	0.3	0.3	0.3	0.3	0.3	0.3	0.3	
Magnesium	0.10 max.	0.10 max.	0.10 max.	0.10 max.	0.10 max.	0.05 max.	0.10 max.	0.10 max.	7.5 to 8.5
Tin, max.	0.1	0.1	0.1	0.1	0.1	0.1	0.1	0.3	
Total other impurities, max.	0.2	0.2	0.2	0.2	0.2	0.2	0.2	0.3	0.2
Properties and Constants:‖									
Yield strength, tension (set 0.2%) psi.	13,000	18,000	14,000	19,000	....	20,000	....	24,000	23,000
Ultimate tensile strength, psi.	29,000	33,000	30,000	35,000	29,000	33,000	32,000	32,000	38,000
Elongation, % in 2 in.	3.5	1.5	3.5	2.7	4.0	1.0	1.7	1.3	5.0
Charpy impact, ft.-lb.§	4.5	2.0	5.0	2.5	4.5	2.0	3.0	3.0	10.0
Brinell hardness number	60	80	60	70	60	80	....	70	
Specific gravity	2.70	2.66	2.75	2.78	2.72	2.87	....	2.85	2.53
Weight, lb. per cu. in.	0.097	0.096	0.099	0.101	0.098	0.104	....	0.103	0.091
Shearing strength, psi.	18,000	22,000	19,000	22,000	18,000	22,000	....	26,000	
Melting point (liquid temp.) °F.	1,165	1,080	1,180	1,145	1,195	1,160	....	1,165	1,160
Thermal conductivity, cgs units	0.38	0.33	0.28	0.27	0.26	0.25	....	0.27	0.24
Thermal expansion, in. per in. per °C.	0.000022	0.000020	0.000023	0.000021	0.000022	0.000021	....	0.000022	0.000024
Electrical resistivity, microhm-cm.	4.2	5.9	5.7	6.2	6.0	6.6	....	6.2	

* Correspond with A.S.T.M. specifications in the case of A.S.T.M. standard alloys. In Alcoa 218 the composition is as given by Aluminum Company of America.

† Copper, silicon, and nickel 11.0 per cent maximum.

‡ Copper and silicon, 11.0 per cent maximum.

§ ¼- by ¼-in. unnotched specimen.

‖ In practically all cases these data are as furnished by Aluminum Company of America and apply to standard test specimens. According to this source, alloys VIII and IX are of diminishing importance.

than for the zinc alloys (though costing less than for the copper alloys) and involves higher die costs. Although aluminum die castings can be plated, plating is not widely done and is considered more difficult than for zinc alloys. Aluminum alloys of some compositions are readily anodized and the anodized coatings can be dyed in attractive and brilliant colors. Organic coatings are easily applied, possess excellent adherence, and can be baked at high temperatures. Dimensional changes subsequent to casting are understood to be nil.

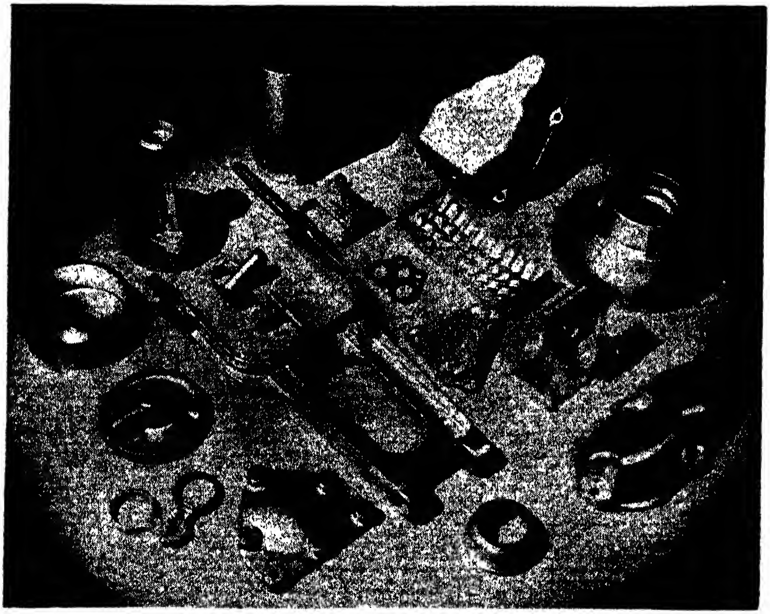

Magnesium-alloy (Dowmetal) die castings, characterized by minimum weight and designed primarily for aircraft applications. Sizes and section thicknesses are typical of such castings, but some larger parts have been produced in magnesium alloys. (*Courtesy of The Dow Chemical Company.*)

Table IV gives the composition and properties of the more important aluminum alloys. Choice between these alloys is commonly made largely on the basis of casting qualities by the die caster. He generally selects the alloy he considers best suited to his needs unless a particular one is specified by the purchaser.

Magnesium-alloy die castings are confined almost exclusively to applications in which minimum weight is desired or is essential. Their mechanical properties are about the same as those of aluminum alloys, but casting necessitates certain precautions against fire hazards and can be done only with special furnace equipment and in cold-chamber machines. Machining properties are good, but machining requires precautions against ignition of chips. Surface-corrosion resistance is generally considered to be poor, and nearly all castings produced are given a treatment designed to inhibit corrosion and to serve as a base for applied finishes. Though plating has been done, it is only just emerging as a commercial process. Casting is done at about the same temperature as for aluminum alloys, and the same dies can be used. Table V gives the properties and composition of the most generally used magnesium alloys.

TABLE V.—COMPOSITION AND PROPERTIES OF MAGNESIUM ALLOYS FOR DIE CASTING

Designation:		
A.S.T.M.	No. 12	No. 13
S.A.E.	....	501
Dow Chemical Co.	Dowmetal K	Dowmetal R
American Magnesium Corp.	AM 230	AM 263
Composition, %:*		
Aluminum	9.0 to 11.0	8.3 to 9.7
Manganese, min	0.10	0.13
Zinc	0.3 max.	0.4 to 1.0
Silicon, max	1.0	0.5
Copper, max	0.05	0.05
Nickel, max	0.03	0.03
Magnesium	Remainder	Remainder
Properties and Constants:†		
Tensile strength, psi	30,000	33,000
Yield strength, psi	22,000	21,000
Elongation, % in 2 in.	1	3
Brinell hardness number	62	60
Izod impact strength, ft.-lb.	1	2
Specific gravity	1.81	1.81
Weight per cu. in.	0.066	0.066
Melting point, °F	1100	1120

* Composition of alloys as in A.S.T.M. specification.

† Properties, as in data furnished by Dow Chemical Company and by American Magnesium Corporation.

Copper-base alloys, generally referred to as "brass," are cast at the highest temperatures of any alloys for die casting and are cast only in the cold-chamber type of machine. The high casting temperature is hard on dies. Even the heat-resisting die steels have only moderate life and necessitate rather frequent redressing if smooth castings are demanded. In addition, copper-base alloys are commonly higher in cost than most other types. It is possible, however, to produce copper-base die castings having tensile strength of above 100,000 psi, or far

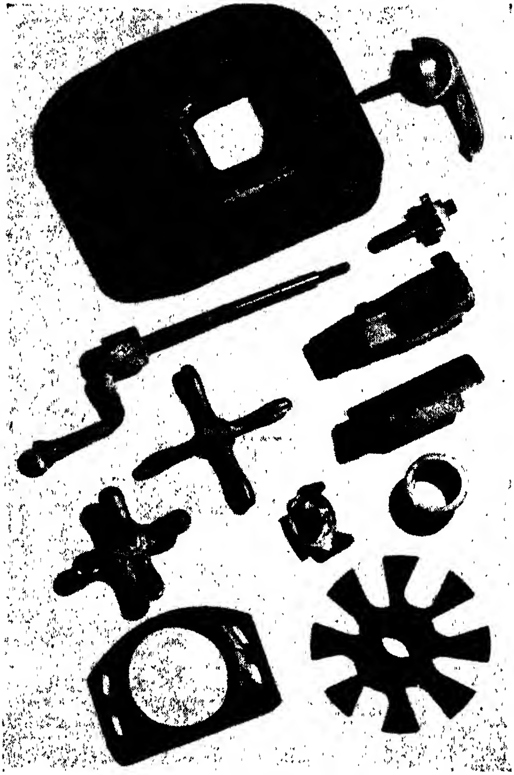

All these are copper-base die castings, produced on cold-chamber machines and range in weight from something over 1 oz. to about 13 lb. The largest part is in manganese bronze, measures about 6 by 6 by 2¼ in. and has sections up to 1⅝ in. thick. It is a part for a canning machine and is subject to shock loading and the alloy used has a tensile strength approximating that of mild wrought steel. Several of the other parts are for the plumbing trade. Part in lower right corner is a retainer for flyballs in a Diesel-engine governor. All except the largest part, which is of exceptionally large size for a brass die casting (possibly the heaviest yet produced), are fairly typical of the copper-base type. The thinnest section in these parts is about 1/16 in., but somewhat thinner sections in brass die castings have been achieved for small parts.

above that for other die-casting alloys. High hardness and high impact strength are also attained and corrosion resistance is superior to that for most other alloys. Uses are confined almost entirely to applications in which these properties (which, with compositions, are given in Table VI) are essential.

TABLE VI.—COMPOSITION AND PROPERTIES OF COPPER ALLOYS FOR DIE CASTING

Common name of alloy	Yellow brass*	Doler brass No. 1	Doler brass No. 4 "Brastil"	Doler brass No. 5	Titan Tinicosil	Manganese bronze*
S.A.E. Designation	43*	...	...	...	...	43*
Composition, %:						
Copper	57-59	65.0	81.5	83.0	42.0	55-60
Zinc	40-42	Rem.	Rem.	Rem.	41.0	38-42
Tin	1.5 max.	0.25 max.	0.10 max.	0.25 max.	...	1.5 max.
Aluminum	0.1 max.	0.05 max.	0.05 max.	1.0	......	1.5 max.
Lead	0.40 max.	0.25 max.	0.25 max.	0.25 max.	1.0	0.40 max.
Manganese	0.0–0.25	0.25 max.	0.25 max.	1.0	......	3.5 max.
Nickel		0.25 max.	0.25 max.	0.25 max.	16.0	
Silicon		1.0	4.0	5.0		
Iron	2.0 max.	0.25 max.	0.15 max.	0.25 max.	......	2.0 max.
Other impurities		0.25 max.	0.25 max.	0.25 max.		
Properties and constants:						
Ultimate tensile strength, psi	65,000	65,000	85,000	105,000	85,000	65,000
Yield point, psi	40,000	35,000	50,000	60,000	65,000–72,000	30,000
Impact strength Charpy, ft.-lb.	33	36	36	30	......	36
Elongation, % in 2 in.	15.0	25.0	8.00	5.0	15.0	10.0
Reduction of area, %	15-20	...	10-15	...	10-18	
Brinell hardness number	120-130	120	170	190	160	110-130
Specific gravity	8.5	8.6	8.3	8.2	8.5	
Weight per cu. in.	0.305	0.308	0.297	0.295	0.305	
Melting point, °F	1,650	1,575	1,575	1,564	1,675	1,650
Solidification shrinkage, in. per ft.	3/16	...	3/16	...	3/16	
Machinability	Fair	Good	Fair	Fair	Good	Fair
Corrosion resistance	Good	Good	High	High	High	Good

* Both these alloys come within S.A.E. No. 43 tolerances as to composition but yellow brass is normally substantially free of manganese.

Choice of Alloys by Designer.—In general, the designer of products for quantity production should choose that type of alloy which affords the properties needed and at the same time yields the lowest over-all cost consistent with these requirements. Often this involves much study and sometimes makes it necessary to secure competitive bids on two or more types. It should not be forgotten, however, that the cost per casting, as produced, is usually far from being the over-all cost. Ease and extent of machining and cost of finishing are likely to be important, as they frequently exceed the cost of the casting itself. Die cost and die life also require study, as they vary widely and have a bearing upon machining and finishing costs (see Table II). Reliable die casters should be consulted, as experience counts heavily in this regard. In general, it is best to allow the die caster to make the choice of alloys of a given base metal unless there are specific and weighty reasons for naming the particular alloy wanted. This is because the die caster is the best judge as to the alloy he can cast to best advantage. When, however, there are standard specifications covering the type of alloy chosen, such specifications should be followed and corresponding checks should be made unless the departure from standard is based upon valid reasons and a guaranty of satisfactory performance is definitely assured.

Visualizing conditions surrounding production and making due allowance for these conditions can aid greatly in the logical design of any product. It is futile, of course, to design a die casting which it is utterly impractical to produce and, when minimum cost is an objective, it is illogical to design the piece so that its cost materially exceeds that of an equivalent part which meets every requirement. For this reason, the most successful designer is likely to be the one who best adapts his design to the production process to be employed, always assuming, of course, that the product meets a given set of other requirements.

In designing a die casting it is helpful to visualize it in a rigid steel die from which it must be capable of ready removal, usually after cores have been withdrawn. All dies are made in at least two parts, which have to be locked together while the die is being filled and while the metal injected assumes a solid form. The die parts are then separated (opened) and the casting ejected. It must, of course, clear the die and be ejected without significant distortion. The designer should consider where the die parting must come to permit the casting to clear the die and how cores can be pulled out.

If separate slides are required to clear the casting, this should be considered and the location and shape of cores should not involve unduly expensive die construction. In other words, factors tending to raise die cost should not be allowed to enter unless the result fully justifies the expense involved. These factors are considered in more detail elsewhere, but if the designer can visualize what is required to produce the casting, he is better able to design it so as to gain the advantages of minimum cost.

Visualization is often greatly facilitated by constructing even a rough model of the casting needed, though one made to scale is still better. The model almost invariably reveals one or more features of design that can be altered with profit in lower die or in piece cost, partly because the model can be viewed from all angles whereas ordinary projection views show the part usually from only two or three positions. With a model in hand, it is easy to see how a die must be built to fit around it and how the part will then be removed from the die. Since a good model looks precisely like the casting to be made, it is easy to judge the appearance of the casting in its finished form. This often helps greatly toward ensuring the best possible shape and contour. It enables those not familiar with mechanical drawings to criticize appearance constructively and may thus avoid a type of design that lacks eye appeal and so will not sell readily. This applies especially to external parts, the appearance of which is important, but it applies also to some extent to parts seldom seen.

A two-piece die is usually lowest in cost, and, if the cavity is given a shape that is easy to machine, die cost is minimized. As appears later, however, there are many cases in which complex dies, though costing more than simpler ones, yield advantages and economies in casting cost that amply justify higher first cost. All design involves a series of compromises between what may be called "ideal" and such practical considerations as have to be introduced to lower cost or to gain some other benefit such as to justify the expedient employed.

Need for consulting experienced die casters is often urged upon the designer of a part to be die cast—and with good reason. The die caster lives daily with problems of casting, machining, and finishing that the designer of the part may never encounter and may thus fail to comprehend. If he knows little of the problems, steps by which they are avoided or rendered less bothersome may never be taken. Then, inevitably, costs are higher than they need be and, though the designer may never know the facts, he or the purchaser of the casting pays more than need be paid had some simple step been taken when the design was in a formative state.

As die casters welcome opportunities for constructive suggestions on casting and corresponding die design, the designer who fails to consult the die caster when preparing the design is more than likely to pass up economies otherwise gained. Even the most experienced designer of die castings may overlook economies recognized by the die caster and, the earlier in the process of design that the die caster is consulted, the more likely is the design to be well adapted for production at low cost.

Rules for designing die castings can never be hard and fast, that is, unvarying in their application. But general rules can be formulated and, if followed with judgment, can go far toward realizing a design that is both logical and helpful in attaining low cost. Rules here given are not universally applicable, and it should be understood that there are sound reasons for exceptions in particular cases. Reasons for the rules and, in many cases, examples of their application are given in the belief that this will help them to be remembered and observed. A careful check of any given design of die casting against the rules is quite likely to reveal some shortcoming of the design or some opportunity for economy or other improvement. Although many of the rules may seem self-apparent, even experienced designers sometimes fail to heed what should be obvious, and nothing is lost even though a quick check of such points does not reveal oversights or indicate desirable changes.

Since the rules apply primarily to designs of parts to be produced in large quantities, where low cost is nearly always a highly important consideration, many of the rules are aimed at achieving minimum cost, although they can be applied to advantage in most cases even when low cost is far from a paramount consideration.

It should be kept in mind that, even if not indicated in each case, *the rules presuppose* that the designer has not failed to allow sections of sufficient thickness to ensure adequate strength and to provide the factor of safety that good engineering practice dictates. This assumes, of course, that the designer has taken into consideration the physical properties of the particular alloy to be used, the properties being given in accompanying tables.

Porosity.—Die castings, in common with all other types of castings, are seldom, if ever, completely free from porosity.

There may even be voids of considerable size just as blowholes often occur in sand castings. Partly for this reason, it is common practice to allow larger factors of safety in all cast parts than are allowed in similar parts made from wrought metals. Air causing porosity or voids is often trapped in die castings. Proper gating and venting of the die, however, can reduce porosity and voids to a minimum and can largely confine them to areas in which stresses are low and strength is ample. Die design is largely empirical and changes in gating and venting are often made after the die is built to minimize porosity, especially in critical areas. This is primarily a matter for the die caster, but he should be specifically informed as to where porosity has to be minimized and drawings or specifications should indicate areas where porosity is not permitted.

There is some evidence that high injection pressures tend to reduce or even substantially to eliminate porosity, but expense may be increased, without any corresponding gain, by using a pressure higher than good practice has shown to be essential. This matter is commonly left to the die caster, as it should be, for the designer of the casting is concerned chiefly with the results secured rather than with the methods or equipment by which they are attained. It is the designer's function to prepare adequate specifications, but with due regard both to what it is absolutely *essential* to attain and to what this may involve in the way of cost.

Rule 1. Size of Casting: Keep size at a minimum consistent with other requirements. Reasons for this are largely those involved in attaining low cost of both die and piece and, in extreme cases, holding size within limits feasible for the equipment available. Increased size commonly means higher die cost (except for very small parts) and always involves more metal in the casting and consequently a higher metal cost. Machining cost may also go up and, if a larger size of casting machine is needed, casting rates may be decreased. There are cases, however, in which a single large piece costs less than two smaller ones cast separately, provided that the shape is not rendered unduly difficult to cast. There are many cases in which combination dies (having more than one cavity of different shapes) or multiple-cavity dies (having two or more duplicate cavities) are most economical. In such instances, parts of minimum size may make it possible to gain a given production more rapidly and/or with lower die cost than otherwise, again favoring the smaller size of casting (see also Rules 19 and 20).

Rule 2. Section Thickness: See that all sections are of minimum thickness consistent with reasonable ease of casting and with adequate strength and stiffness. Thin sections not only ensure the use of a minimum of metal in the casting but are stronger, *in proportion to thickness*, than are thicker ones. This is because the skin of castings is chilled rapidly by contact with die walls, and such chilling makes for greater strength than is attained at interior parts of the section, where slower cooling occurs and a less favorable grain structure is produced. Since the skin forms a larger part of the total thickness in a thin section than in a thicker one, the thinner one is stronger in proportion to its thickness. In addition, thin sections cool more rapidly than thick ones, hence dies can be opened sooner and casting rates can be higher. Moreover, thick sections are much more prone to be porous than thin ones, and a smoother surface (especially advantageous where plating is to be done) is likely to be attained on thin sections.

Quite often, a thin section requires reinforcement with ribs but still affords lower over-all weight than on unribbed sections of greater average thickness. It is essential, however, that sections are not made so thin that the die cavity cannot be completely filled. Much depends upon how the metal has to flow. Judicious placing of ribs often aids flow into thin sections.

A common practice is to specify average section thickness in a convenient fraction of an inch rather than in decimal parts of an inch, say a few thousandths thinner than the fraction indicates, noting that this is the maximum desired. Sections even a few thousandths of an inch thinner may effect a considerable saving in metal, especially when orders involve many thousands of castings. Often the matter of section thickness is left largely to the caster, who does not always make sections as thin as he could since thicker sections are likely to be easier to cast. The matter is one that should be discussed with the die caster, as sections should never be specified so thin as to make casting unduly difficult. On the other hand, the caster should certainly be made to understand that sections must not exceed the maximum thickness agreed upon, though he should be allowed, of course, a reasonable tolerance, as precise thicknesses are hard to hold.

It is significant, however, that if a die is made for a given desired section thickness, which is as low as conditions appear to admit, and it proves impossible to cast at this thickness, thickness is easily increased by grinding the die, whereas, if the section be made thicker initially than it need be, it is not so easy to decrease it, as then the die must be rebuilt or metal must be welded in and ground to make sections thinner. Many die castings, such as those in Fig. 1, for example, are as thin as stampings yet can be made in shapes that cannot be duplicated in one-piece stampings and involve a lower die cost.

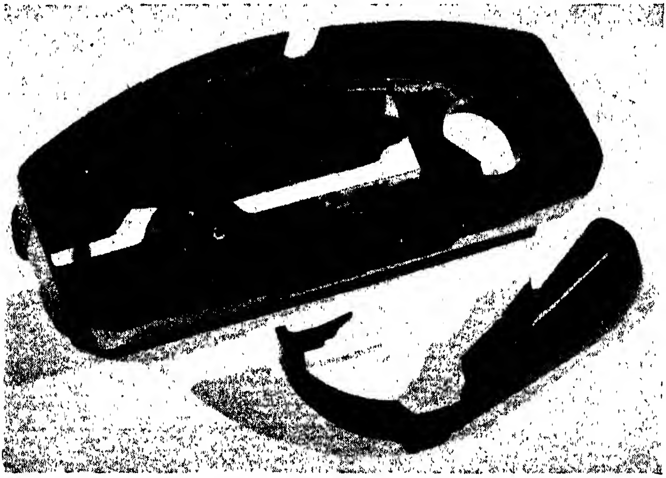

Fig. 1.—These zinc-alloy die castings, the largest of which measures 5 by 8 by 18 in. over all and yet has an average section thickness of only 0.050 in., are good examples of what can be accomplished by reducing sections to a minimum. The parts are no thicker than many stampings but would be difficult to reproduce in stamped form and would involve much greater die cost if stamped.

Rule 3. Uniformity in Section Thickness: Make sections as nearly uniform in thickness as due regard for other desirable features allows and, where variations in thickness of section are necessary, make the transition from thinner to thicker gradual rather than abrupt. Reasons for this are much the same for die castings as for sand and other castings. Thin sections solidify and cool more rapidly than thick ones, and unequal contraction causes shrinkage stresses and may result in warpage or even in cracking of the casting. Cracking may occur while the casting is still in the die or during ejection, since the die cannot be opened until all sections are adequately solid. There may thus be severe internal stresses set up between points on thin areas, which tend to contract more rapidly than the die, yet earlier ejection is not feasible since thick parts of the casting are still too soft. If, however, the transition from thick to thin sections is gradual, serious difficulties from unequal shrinkage stresses are usually avoided.

There are, too, other factors that control section thickness. If, for example, it is desired that the casting weigh as little as possible, consistent with adequate strength, it is usually necessary to vary the section thickness in proportion to the stress involved. If this is done, the casting will be thickest where stresses are greatest and thinnest where they are lowest. Again, where the casting is fastened to another part, a boss, involving a thicker section, is commonly provided at the fastening. To help distribute the stress, ribs may be added around the boss. Trouble from such thickening at various points is avoided, in general, by making the transition gradual. Addition of ribs is often a good way to increase strength as well as stiffness without making a significant change in section thickness but, in such cases, the rib thickness should not materially exceed that of the area

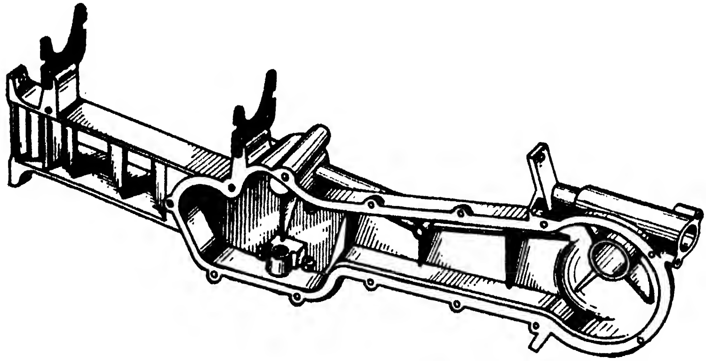

FIG. 2.—This large die casting for a washing-machine gear housing, though fairly uniform in section thickness over most of its area, has many thicker areas around bosses, fastening points, and bearings. Ribs are employed to gain stiffness and help distribute stresses where loads are concentrated, as at fastening points. Black extensions are stamped parts cast in place to act as motor supports.

it adjoins and should not be so placed that it will complicate or interfere with removal of the casting from the die.

Examination of the accompanying illustrations (Figs. 2 to 4) of entirely satisfactory die castings shows that many considerations outweigh the desirability of strictly uniform section thickness, even though the reasons favoring uniformity in thickness are valid. One such consideration is the need for having castings of a particular shape, say for appearance reasons or to match or blend with some mating part. It may not be feasible to use a core where it would help to maintain a uniform section, or it may be necessary to add some extension, for example, to provide a hub with a keyway or some element that must support a concentrated load and thus requires thicker sections in particular locations. Despite such factors, a study of an average casting will usually reveal that sections at some points could have been made more nearly uniform in thickness without any undesirable sacrifice and with a saving in weight.

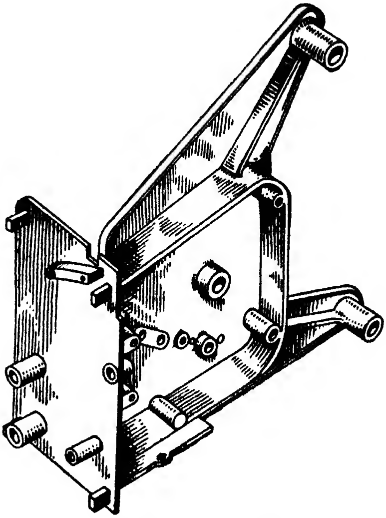

FIG. 3.—Sections are fairly uniform in this die-cast frame for a projection machine, partly because ribs are properly used, but there is some necessary thickening at bosses.

One way of gaining or more closely approaching uniformity in section thickness is to provide for cores where otherwise there would be unduly thick sections. Cores termed "metal savers" are often utilized for this purpose as well as to save metal. (Recesses marked *M*, Fig. 4, are formed by metal savers.) In other cases, the core provides a hole required for some part to be added anyway, but still helps to avoid sections unduly thick. In short, if the designer keeps Rule 3 in mind, he can find ways of putting it into effect and thus gain corresponding advantages.

Rule 4. Use of Cores: Provide for cores wherever, consistent with other requirements, they (1) save metal, (2) save machine work, (3) make for sounder castings of reasonably uniform

section thickness, (4) tend to lower cost. Since ease of precise coring is one of the major advantages of the die casting, especially as opposed to the sand casting, the designer who disregards this rule is likely to sacrifice important gains. Naturally, the extent to which cores can be used with net advantage varies with the shape of the casting and with the cost of providing and operating the cores. Cores often have a considerable effect upon the cost of the die, but the greater the number of castings required and the greater the saving per piece effected by coring, the more important it is that cores be provided. In other words, even though cores are expensive (and commonly they are not) their cost is amply justified if they save more than their cost, especially as they afford advantages aside from cost saving. Cores in most casting dies either last as long as the die itself or are relatively inexpensive to renew. They are not like sand cores, which have to be made and set separately for each individual sand casting in which they are used.

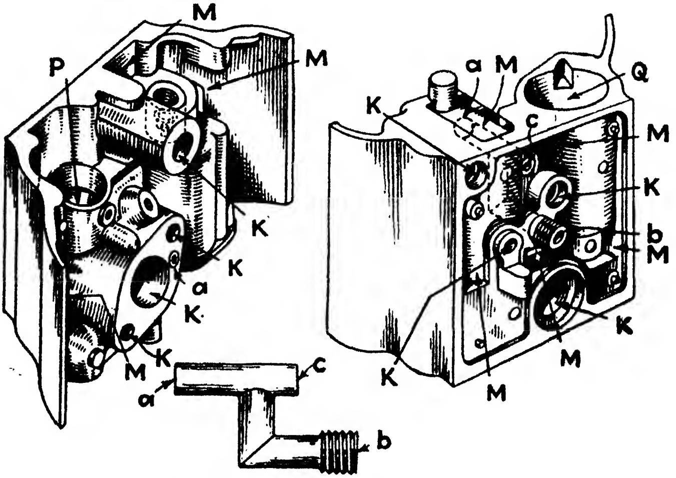

Fig. 4.—In a complex die casting, such as this carburetor part produced in aluminum alloy, the multiplicity of passages and the use of an insert cast in place necessitates wide variations in section thickness, but the use of liberal fillets helps to make the transition from thick to thin sections gradual and the use of numerous metal-saving cores, forming recesses marked *M*, helps to avoid excessively thick sections. The bronze insert (which is a sand-cast part) the ends of which are marked *a*, *b*, and *c*, is shown separately and by dotted lines in view at right. Holes marked *K* are formed by core pins the axes of which are parallel to each other and to direction of die motion. Holes marked *P* and *Q* are made by movable core pins parallel to die parting.

The usual core in a die casting is a slightly tapered pin of circular section or a bar of metal having the shape of the hole it is to produce, though it can be a tube or can form any one of a great variety of hole shapes, providing it is so shaped that it can be withdrawn after the casting is formed. Cores are used to form holes or recesses. They may be either fixed in the die or movable in reference to the die. In general, they cost least and are easiest to operate when they lie parallel to the axis (direction of motion) of the die itself or of a die slide in which they are carried. (Holes marked *K*, Fig. 4, are formed by pins lying parallel to die motion.) Cores can be applied, however, at almost any angle. They have to be firmly supported and provision for pulling them is necessary. Their actuating mechanism is commonly a part of the die assembly, though casting machines often include some die-operating parts and many cores depend in part upon manual or even upon hydraulic operation.

In essence, the core either makes the casting hollow or provides holes or recesses in the casting for particular purposes. As the holes or recesses are commonly sized with relative precision, they usually require little or no machining. This is not true of recesses or holes formed by sand cores in sand castings. Moreover, holes as small as $\frac{1}{32}$ in. in diameter can often be cored in die castings. It is common for die castings to have numerous cored holes, all held within fairly close center distances and none requiring more than a light cut with drill or reamer to be brought to precise size. It is not unusual for cored holes to be held within dimensions so close that no machining whatever is needed. Holes to be tapped are frequently cast to tapping size.

In general, cores must be given a slight draft (see Table I) and must never contain undercuts such as to prevent their withdrawal from the die. Under certain circumstances, however, even cores involving undercuts are feasible, but there must then be some special provision for withdrawing the core from the casting.

As previously indicated, cores are effectively used to save metal, to help keep sections more nearly uniform in thickness, and to avoid or minimize porosity as well as to provide holes or recesses where they are needed. There are cases, however, where it is cheaper to drill or to punch small holes through thin sections of die castings than to core the holes. This is partly because flash is usually formed at one or both ends of a cored hole and has to be removed by machining. Since this machining is usually needed anyway, it is no more work to drill a small hole or punch it through a thin section than to machine out the flash. Holes over ⅛ in. in depth are commonly cored, however, unless they come at a point where a core involves undue cost in the die, in operation, or in both. It is often helpful, however, to use a pointed core to spot a hole that is to be drilled subsequently, the core forming a recess such as a center punch might make.

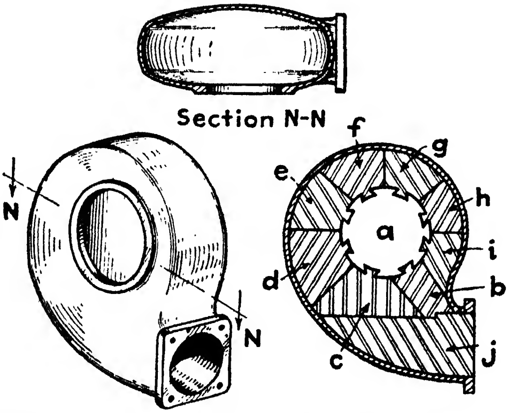

FIG. 5.—Diagram of a die-cast vacuum-cleaner housing in which the cores, made in several pieces, form an undercut. The central core, *a*, supports and positions the knockouts *b*, *c*, *d*, *e*, *f*, *g*, *h*, and *i*. A separate core *j* is supported by the die, as is the central core, *a*. After the die is filled, cores *a* and *j* are withdrawn, the die is opened, and the casting, with knockouts still in place, is ejected. Knockout *b* is then tapped free and releases the remaining knockouts, which are then easily removed. All knockouts are assembled around central core *a* before the die is closed for producing the next casting.

The utility of cores and the savings and other advantages that usually attend their proper application are so great in most castings in which there is any occasion for coring that it pays to study their proper use and to design the casting not only for coring but in such a way as to facilitate the use of cores and their ready withdrawal from the casting.

There are even cases in which it is expedient to employ that type of core called "knockouts" to form an undercut recess. Such a core (see Fig. 5) has to be so made that it is positively positioned by the die or by other cores but comes free of the die within the casting when the latter is ejected from the die. Such cores are commonly made in two or more pieces and have to be knocked out of the casting after the latter is taken from the die. Then the same pieces or a duplicate set are assembled in the die again before the next casting is made. This expedient is justified only when equivalent results cannot be secured otherwise at the same or at lower cost, since it slows the casting cycle and often requires an extra man to remove the knockouts and set them back in the die. Although no more than one casting design in a hundred, perhaps, may require knockouts, there are cases in which their use results in substantial savings, as otherwise, in general, the casting must either be made in two or more separate pieces or must be cast with a sand core not suited for use in a die casting. It is best, however, to avoid knockouts except where, after careful consideration of other expedients (such, for example, such as making a two-piece assembly rather than a single casting) such have been weighed and the advice of a competent die caster is secured.

Though the designer of the casting rarely designs the die in which it is produced, he should be sure that the casting design is such that a practical die of reasonable cost and one not too expensive to operate can be built. Die casters are usually able to offer suggestions which, if followed, lower both the die cost and casting cost and still yield castings that meet all reasonable requirements in other respects.

In designing cores, it should be remembered that, as and after the casting solidifies around them, considerable shrinkage of the casting occurs, causing it to grip the cores. For this reason, the core must be strong enough to resist shrinkage stresses. Cores should also have sufficient draft to facilitate their withdrawal. Minimum draft is indicated for different alloys in Table I. Still larger draft, when conditions permit, is often desirable, partly because it reduces the abrasion on cores, since they come free of the casting more readily.

Rule 5. Length of Cores: Avoid cores of extreme length, especially slender cores, unless assured that their use is completely justified by some special conditions. In general, the length of cores supported at one end only should not exceed three to four times[1] their diameter, particularly in sizes below ½ in.

---

[1] Table I, Chapter XI, gives specific data on core length in relation to diameter, based, presumably, on the experience of a user of many die castings.

diameter. Somewhat longer cores can be used in special cases or when the outer end of the core is supported by telescoping into some part of the die. Slender cores are easily bent or broken by metal impact or shrinkage stresses. Although their use is occasionally justified when their location is favorable, the designer should make sure that the die caster considers a long slender core feasible.

Cores of exceptional length, even when having sufficient strength and stiffness, often require special means for pulling, such as a long-stroke hydraulic cylinder, which has to be added to the die and increases its cost accordingly. There are cases, however, when cores 12 in. or more in length have been used both with success and with ample economic justification in lowering the cost of the casting. When a deeper hole than it is feasible to core is required, it is often economical to core a part of its length and leave the remainder to be drilled. This applies especially when the section left for drilling is not so thick that undue porosity will result and, perhaps, make drilling difficult.

Rule 6. Position of Cores: Design the casting so that, consistent with other requirements, cores come where ready withdrawal is achieved with a minimum of special die parts for withdrawal and locking of cores. Unless this rule is observed, die cost is increased and the cost per casting may also be higher because extra time for core operation is needed (see Fig. 6).

The cheapest core usually is a pin which is lying parallel to the direction of die motion and is fixed either to the front or to the rear section of the die or (if the die must have a slide anyway) which is arranged to move with the slide. Many castings have cores in other positions but they then require some special means for actuation and are likely to increase die cost and sometimes operating cost (see Fig. 6). Cores are often placed, without undue cost, either in the parting plane of the die or, if essential, at almost any angle thereto. In such cases, the extra cost of the die (and of the piece, if any) should be warranted by the benefits, including any saving in metal and in machine work on the casting resulting from use of the core.

All cores have to be locked so that they do not move when metal is injected into the die and the locking as well as the operating means, usually built into the die, are not negligible factors in over-all cost, even though amply warranted through savings in the cost of the casting. Many die casters have machines equipped with core-operating devices but, even then, parts of the mechanism, as well as the core and its guiding parts, are usually built into the die and affect its cost materially.

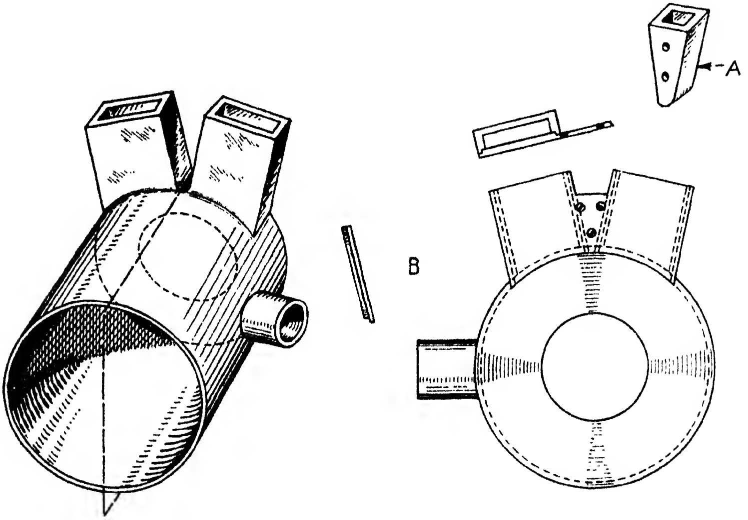

Fig. 6.—In this casting, the vertical parting plane is through horizontal axis of piece and midway between hollow rectangular projections at far end, which is closed except for central hole, latter being formed by a boss on end of large cylindrical core, which is withdrawn, of course, parallel to axis. Core for projection at right is fixed in die, its axis being parallel to die motion and at right angles to parting plane. At least two angular cores are needed to form passages in rectangular projections and recess between them, making an expensive die. Die cost would be much decreased if front and rear walls of rectangular projections were made continuous, a single vertical core used, and a triangular bridge, *A*, cast in small separate cavity of same die, inserted to form separate passages. Reduction in cost could also be effected if far walls of rectangular projections were made as a separate plate, as in sketch *B*. Then recesses of rectangular passages and a triangular recess between them would be formed by a core moving parallel to large central core but in opposite direction, the plate being die cast in a separate cavity of same die.

Fixed cores, attached permanently to some part of the die, need no operating mechanism and are lowest in cost. They have to be placed, however, either so that they are withdrawn from the casting when the die part holding them is moved or so that, when the casting is moved with a part of the die or is ejected from the die, the casting is forced off the core. For this reason, the fixed core must have its axis parallel to the motion of some movable part of the die, either the movable rear section of the die or a slide carried in the die. This does not apply, of course, to the knockout core, which comes away from the die with the casting and is subsequently knocked out, as elsewhere described.

Rule 7. Shape of Cores: See that cores have the simplest shape which will yield the result required. This rule is based chiefly on the desirability of making cores inexpensive to produce and of avoiding undercut cores, which, though sometimes warranted, are likely to be rather expensive to make and to keep in good operating condition. A core that is nearly cylindrical (it should have some draft and therefore is necessarily slightly tapered) is easiest to machine and is used most generally unless conditions require another shape. The hole in which it fits is usually drilled and reamed or ground and so involves only simple operations. Usually the shank of the core is a true cylinder even if the projecting part, forming the hole in the casting, has to be of some other shape. Metal-saving cores, as for those forming recesses marked *M*, Fig. 4, are often of odd shape to fit between other elements, but even some such cores are circular in section.

Cores involving undercuts are usually of the knockout type but are occasionally designed to be rocked rather than pushed into place or are made in two or more parts, one of which has to be withdrawn before the remaining portion can be cleared and pulled from the casting. Cores made from two or more mating parts involve fitting at joints, which increases expense. Cores that intersect, as core *P*, which meets core marked *K*, Fig. 4 (see also Fig. 6) are useful in certain complex castings but involve extra expense and a mechanism for operating in correct sequence, which adds further to their cost.

Any core that has a joint where parts thereof mate inside the casting results in the formation of flash at this joint, and provision for removing the flash in each casting, at some extra expense, has to be considered.

Cores that form blind rather than through holes have the advantage that no flash is produced at the closed end of the hole. Flash forms where movable cores must have clearance in die parts in which they move, and the usual need for removing this flash involves some expense, which is avoided when a fixed core is employed. Flash occurs at both ends of a movable core that pilots in both halves of the die.

Cores that have an external thread are occasionally used, especially where a shallow hole with a coarse thread of fairly large diameter is needed. Such cores, however, have to be unscrewed before the casting shrinks too tightly around them, and this usually requires a special mechanism in the die, adding to its cost. For this reason, such cores are seldom used except where it is known that their use will be cheaper than tapping the hole or threading it with a single-point tool.

Rule 8. Minimizing Machine Work: Design the casting so that the cost of machine work is minimized without undue sacrifice in accuracy, appearance, and performance of required functions. Advantage should be taken of the ability to die cast within reasonably close limits and with comparatively smooth surfaces to secure parts that require a minimum of machine work, since machining costs usually increase in proportion to the thickness of metal that must be removed. Though many die castings need little or no machining, a large proportion must have some machining in addition to the flash removal required on virtually all die castings. In general, however, the areas to be machined can be small and all such areas should be so placed that the machining is of as simple a type and is as quickly accomplished as possible, consistent with results demanded. Where facing or surface grinding is necessary, it can often be done most economically by having the bosses or other surfaces to be machined on one common level. Holes that have to be drilled, tapped, or reamed should be no deeper than conditions demand, and it facilitates these operations if the hole axes are parallel, besides making coring of the holes relatively simple. A small boss is more quickly machined than a large surface and a narrow flange than a wide one. It is especially desirable to avoid the need for machining at points that are hard to reach or that require unusual or unduly complex special tools.

There are cases, however, where machining costs less than a substantially similar result gained by complex coring or by other expensive features of die construction. This may depend upon the number of parts to be made, that is, upon the complexity of the die warranted by the number of castings needed. Certain forms of undercuts, for example, which *can* be produced by coring, may require more expensive coring construction or more time in handling loose cores than the results secured warrant.

In such cases, if the undercut is *essential*, it may be cheaper to machine it rather than core it. Even then, however, the type of machine work should be kept as simple and the amount as small as conditions permit. Though this may appear self-apparent, such items are apt to be overlooked, with the result that costs are higher than they need be. Since it is not at all unusual for the cost of machining a die casting to exceed the cost of the casting itself, the importance of designing so that machine work will be minimized should need no further emphasis.

Rule 9. Flash and Its Removal: Design castings so as to minimize the cost of flash removal. Flash always occurs at die partings and where joints in the die, as at slides and around movable cores, form crevices in the wall of the die cavity. Removal of this flash constitutes a considerable factor in the cost of the casting. Flash removal is, in fact, one phase of machining that is practically unavoidable, but this cost can be minimized by bringing the flash, as far as possible, where its removal is most easily and quickly accomplished. Flash at the parting is commonly removed most readily by a shaving die, through which the casting is forced by a press or its equivalent. If the parting is in a single plane (preferably at right angles to the motion of the die) the flash is easily sheared, but if the parting is not in a single plane more time and greater cost usually are incurred in flash removal. Other tools besides a shaving die may be needed, sometimes raising costs on another score. It follows that, for minimum piece cost, a single-plane parting should be provided, if possible, especially as this also helps to avoid higher die costs.

Flash removal is facilitated when the flash occurs at a flange or bead rather than in a recess or on a flat surface. Not infrequently, flash can be made to come on a surface or edge where machining is required in any case, and, when this is done, a separate flash removal operation is avoided. Thus, for example, if a casting has a flange that has to be machined on one face, and the parting comes at that face, *A*, Fig. 7, machining of the face will remove the flash, whereas if the flash is made to come on the opposite face, *B*, of the flange a separate flash removal operation would have to be performed. If the flange edge is rounded, however, as in Fig. 8, the parting must come at the maximum diameter but can be readily removed either by turning or in a shaving die.

Although the designer of the casting may not design the die, he usually can determine where the parting will have to come. In general, the parting must come at the maximum diameter, and, of course, other portions of the casting must be so disposed that the casting will clear the dies. The designer who visualizes the casting in the die and aims, as he should, to shape it so that ejection is facilitated can also determine where flash will come and endeavor to bring the flash where it is easily removed.

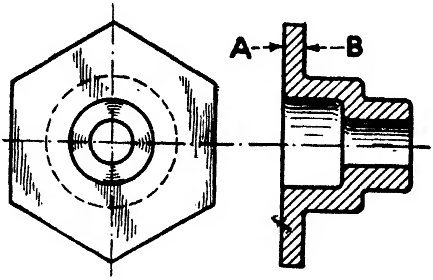

FIG. 7.—If, in this simple die casting, the parting is at face *A*, which has to be machined, the flash will be cut off in the process of machining. But if face *B* is made the parting, flash will have to be removed in a separate operation and will require either a special shaving die or much more time to machine.

Often, a bead can be thrown up at the parting, as in Fig. 9, so as to bring the flash where it is easily machined off. As the bead forms a narrow convex surface, the flash will come at a high point and be easy to get at, whereas, if the surface is kept flat, it is not easy to shave or grind the flash away without leaving tool or grinding marks on adjacent areas. This may appear to be a minor matter and yet it may have a marked effect upon the cost of flash removal and of subsequent finishing, especially where good appearance is essential.

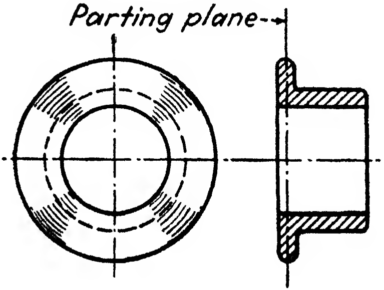

FIG. 8.—When a die casting has a flange with a rounded edge, as here shown, the parting plane has to be at the maximum diameter for casting to clear the die when ejected. Flash at the high point is not hard to remove but may be more noticeable than if the outer edge were square. There is also more machining on the cover half of the die.

Flash at the end of a hole is usually easiest to remove when it constitutes a thin diaphragm closing the end of the hole, as then it is easily punched or drilled out. If, however, the flash forms a sort of collar at the end of the hole (as where a core has clearance in a hole in the die) a facing and/or chamfering operation, involving higher costs, may be needed. On this score, as well as on others, a fixed core and one that ends slightly short of making a through hole is preferable to one that is movable or that pilots in a mating hole at its free end (though the latter may be preferred as having greater strength, especially when a long slender core is needed).

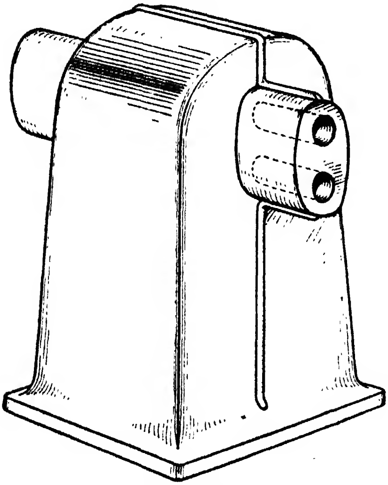

Fig. 9.—A hollow die casting of this shape has to be parted in a plane at right angles to the base and passing through the hole axes of bosses. If a narrow bead is provided at the parting, flash is easily removed without leaving noticeable toolmarks on adjacent surfaces. Such marks are almost unavoidable otherwise, and it requires much extra cost in grinding and polishing to remove them from a flat or even from a crowned surface.

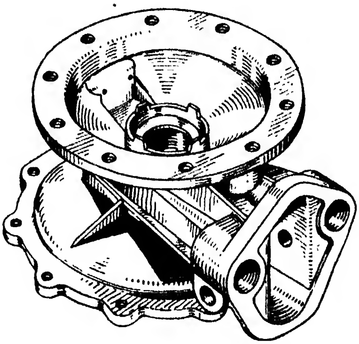

Fig. 10.—With a complex die casting of this shape, slides forming the side walls of the cavity are required. This involves an expensive die but is fully justified, as many thousands of castings are required and the slides form undercuts that save a great deal of metal, besides providing flanges to fit mating parts, thus facilitating ready assembly.

Since the use of slides in a die results in flash where the slides join the cavity or meet each other, slides add to flash removal cost and this fact deserves consideration even though the use of slides is necessary in some cases and often results in net benefits (Fig. 10) as pointed out elsewhere.

Rule 10. Use of Undercuts Requiring Slides: Avoid the use of undercut castings that require the use of slides in the die,

except where offsetting advantages outweigh the disadvantages. The first part of this rule is among those most commonly mentioned by die casters, yet the qualifying exceptions, though well understood when cited, often are neither stated nor explained. Cautions against undercuts are usually based chiefly upon the well-recognized fact that, if they exist on the exterior of the die casting, one or more slides (or at least movable cores) are needed in the die, for otherwise the casting cannot be ejected from the die. Naturally, the addition of slides and their operating mechanisms greatly increases die cost, not to mention extra costs for flash removal. Yet there are thousands of cases where slides are effectively employed to save metal and to make castings of uniform wall thickness, thereby effecting savings that far more than compensate for the extra die and flash-removal costs. Moreover, there are many die castings that could not be made as such at all except by the use of slides in the die.

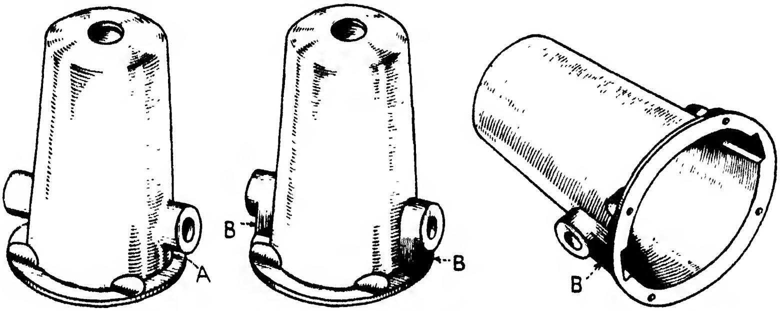

FIG. 11.—This aluminum die-cast motor housing, if made with an undercut recess between the bosses and the flange, as at *A*, would require either the use of slides or parting the die in the plane through the vertical axis of the pieces and through or at right angles to the boss axis. Either alternative involves an expensive die. By extending the boss to the flange, as at *B*, and parting the die in the plane of the flange, a relatively simple die is required. Practically no additional metal is used, as the extended boss is cored out, yielding a substantially uniform section thickness at all points of the casting.

For such reasons, the exceptions need to be kept in mind by the designer. He should, however, make no needless undercuts and should determine, if they appear at first thought to be essential, whether or not they can be avoided by certain expedients. When the quantity of castings required is large, a complex and expensive die may be fully justified by even a small net saving per casting. But if an equivalent result can be secured by small changes in casting design without investing so much in a die and without any offsetting disadvantage in the castings produced, the alternative ought not to be disregarded. Study of the accompanying illustrations, especially Fig. 10, makes it apparent that undercuts requiring slides yield net gains in some instances but are quite unnecessary in other cases, as in Fig. 11, where a slight redesign of the casting avoided an undercut.

Bosses and projections on the sides of castings are often extended to the parting line so as to avoid undercuts, as in Fig. 11, but, if this results in adding much extra metal to the casting, a slide may prove a better alternative, especially if the casting is required in large quantities. Where there are several side cores that can be attached to a common slide, it may prove better and possibly cost less to use a slide rather than to provide for pulling the cores separately, especially if the slide can be made to produce undercuts that result in saving metal, as in Fig. 10.

Rule 11. Use of Fillets: Fillets should be used at inside corners where surfaces join and at exterior corners to join adjacent surfaces unless some special consideration requires that such corners be square. As with sand castings, fillets make for favorable grain structure at corners of die castings. Under some circumstances fillets are less likely to produce excessive turbulence in the flow of molten metal entering the die at high velocity and consequently there may be less tendency to trap air that might be expelled otherwise. This is of more importance when the flow is transverse to a sharp edge of the die cavity (such as would form a sharp interior corner on the casting) than for square exterior corners of the casting, since the latter are in recesses of the die, where less effect on metal flow occurs. Sharp die edges swept by molten metal are liable to heat cracking, especially when the alloy used has a high melting point.

Although fillets are favorable on the above-mentioned scores and sometimes also make castings easier to eject from die cavities, it is entirely feasible to produce castings having square corners and edges when some special requirement (such as a desire for sharp lines to produce certain appearance effects, for example) dictates (as in Fig. 12). Sharp exterior edges and corners on castings add to buffing and plating difficulties and are better avoided unless demanded for good reasons. Sharp edges produce excess wear on buffs, especially if buffs must run transversely to the sharp edge, and such an edge is likely to be rounded somewhat by polishing or buffing anyway. Sharp edges, especially exterior ones, also complicate finishing problems and are likely to be buffed through where plating must be buffed or colored.

Moreover, sharp exterior corners and edges on castings require sharp interior corners in the die and add to die machining costs. When a substantially square exterior edge or corner is required, therefore, it is better to break the edge, that is, chamfer or round it slightly, so that it is not sharp, and this is commonly done. The very slight rounding is hardly noticeable to the eye and so need not affect the appearance significantly. An advantage of a die casting over a stamping in parts such as grilles, for example, is that sharper edges can be produced which often make for smarter appearance. Sharp or square exterior edges are easily marred or nicked, however.

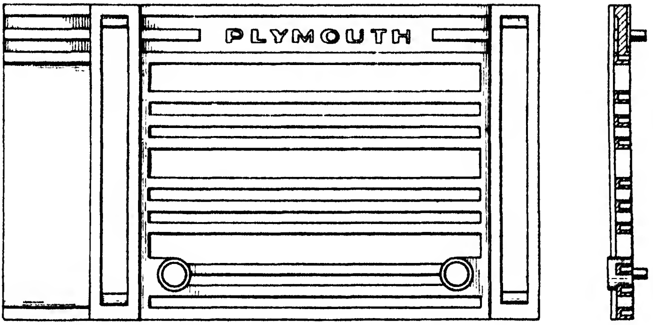

FIG. 12.—Although the face of this die-cast radio grille is substantially flat, the appearance is enhanced by breaking up the areas into panels, in one of which the name of the product appears in bas-relief, several of the panels being slightly recessed. A plain flat surface with openings between bars of the grille would be decidedly inferior in appearance. The unsymmetrical area at left is to match a mating part of an instrument panel. This casting is materially lightened by metal-saving cores in the grille bars. Most edges are relatively sharp, for appearance reasons. Projections on the back are integrally cast studs for receiving speed nuts.

Fillets are recommended almost invariably in joining bosses and ribs to supporting walls of the casting, as the fillets help to avoid localized stresses and to distribute concentrated load over larger areas. Although fillets can be as small as may be required, large fillets are advantageous in stress distribution and sometimes make stiffer castings and render the casting easier to eject from the die. Under most conditions, too, fillets tend to strengthen a casting.

An exterior fillet adjacent to the parting line (for example, at the edge of a flange) sometimes makes it more difficult to remove flash without leaving toolmarks where they are more apparent than if the parting came at a square corner (see Figs. 7 and 8). It is sometimes advocated that outside edges *at die partings* be left square, both to simplify flash removal and to lower die cost. Not infrequently the parting face of the cover portion of a die is perfectly flat, especially when the parting is one face of a flange. This makes for lower die cost, as no cavity has to be machined in the cover die. If a radius is specified at the parting (see Fig. 8), however, part or the cavity must be in the cover die, which usually adds somewhat to die cost.

Rule 12. General Shape of Castings: Keep the shape of the casting as simple as conditions permit, avoiding all unnecessary irregularities and large flat surfaces. Naturally, the casting must be so shaped as to perform its function and to mate with parts to be combined with it, but, with proper forethought, the shape often can be simplified both to enhance appearance and to minimize die costs. Smooth surfaces, free from all unnecessary projections, often referred to as being "streamlined," are usually favorable from a casting standpoint.

If the projecting bosses in Fig. 9, for example, could be eliminated, the casting would be greatly simplified, as the flat bottom face could then be the parting and the interior could be formed by a single fixed core. This would avoid a parting where the bead is and make the bead unnecessary, thus improving the appearance of the casting and reducing its cost as well as that of the die.

Surfaces of rotation are easy to machine in the die as well as on the casting, thus tending to lower costs. Any projections, such as bosses, at an angle to the axis of rotation, though often needed, make the die harder to machine, and the same is true when shapes are angular or of odd contours. Some shapes are practically impossible to machine in the die though they can be sunk by the hobbing process. The latter is useful in some special circumstances but should be avoided, since it is rather expensive and necessitates the use of a highly ductile die steel that may lack enduring qualities. especially for casting alloys of high melting point.

Although castings having large flat surfaces can be cast, it is best to avoid them because it may be difficult to prevent warpage on cooling and irregularities often show up prominently. The latter is especially true when the surface is to be polished, plated, or enameled. Large flat surfaces are feasible on flanges, though facing or grinding may be required to make them truly flat. Such surfaces, however, are usually hidden in assembly of the casting to a mating part.

Any large surface that is to remain exposed is better if at least slightly crowned rather than flat. Curvature commonly adds to strength and stiffness and, if the surface is polished or has a glossy finish, highlights catch the eye, tending to mask surface defects. Crowned surfaces are "more interesting," as the artist says. Large surfaces that might be flat and still satisfy purely structural requirements can be broken by steps, beads, or other means so that the flat areas are smaller and appearance is improved, as in Fig. 12, though this may add materially to die cost. Stippling or other bas-relief is also sometimes used effectively to improve the appearance of large flat areas. Such expedients, as well as beads, steps, or crowning, should not be adopted, of course, when their position is such as to involve undercuts or unduly complicate the die or interfere with ready ejection of the casting from the die, unless, of course, some special consideration amply justifies this departure. In the latter case, a slide may be required and may add considerably to die costs.

Rule 13. Tolerances: Never specify tolerances closer than are essential unless they are in keeping with limits commonly held in die casting the alloy to be used. However obvious this rule may appear, it is frequently overlooked, with the result that costs are or may be materially increased without any compensating gain. There are, of course, good reasons for close limits being specified where mating parts must be held within correspondingly close dimensions or where unusual precision for locating points is essential. But no useful purpose is served in setting closer limits than are required on mating parts (on those dimensions governing fits) or where wider limits will meet requirements.

Table I (p. 6) gives the closest limits that it is commonly practical to hold in the part *as cast*. Under favorable conditions, and especially on certain definite dimensions, it *may* be possible for the die caster to hold to slightly closer as-cast limits, but in no case should the latter be demanded without first consulting the caster and heeding his advice as to the effect upon cost.

If the dimension is so close as to require machining, it is *possible* to hold dimensions as close as on any metal part, but the *possibility* of doing so depends largely upon the machine and the tool chosen and upon the allowable cost if extremely close limits are demanded. Where fractional dimensions are used on drawings, it is common to apply scale measurements or to hold within ±0.010 in. of the nominal dimension unless (for long dimensions) this is closer than can be cast. Where dimensions must be within definite or fairly close limits, the latter should be given

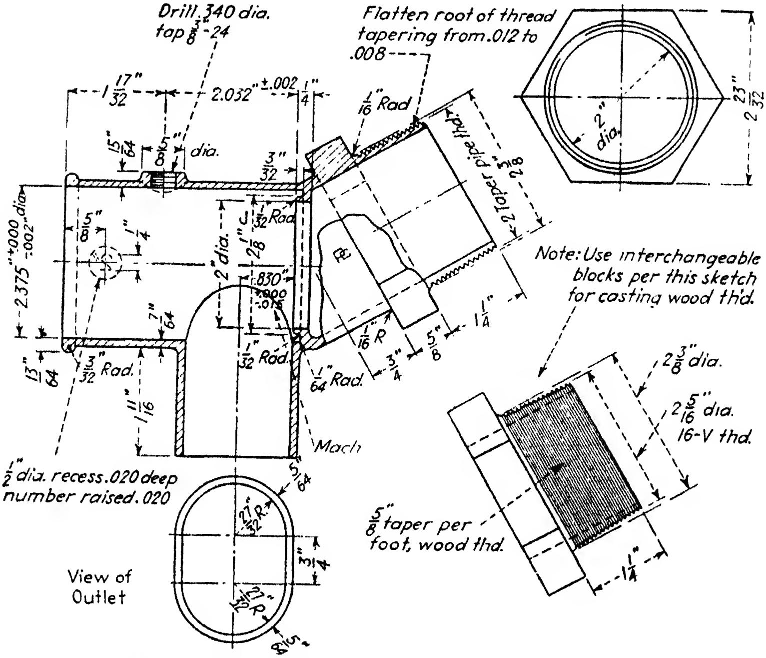

FIG. 13.—Example of a properly dimensioned drawing of a barrel-cock body to be die cast in zinc alloy. Three intersecting cores are used in a piece of this shape, the horizontal bore being machined to hold the close limit required and remove draft. Though no draft is indicated on the other cored holes, the fact that dimensions are given in inches and fractions (rather than decimals) indicates that only scale measurements are required and hence the normal draft for a core leaves a hole well within the ±0.010 in. limit commonly applying where only scale dimensions are given.

on drawings in decimals, as in Fig. 13, which is a good example of a properly dimensioned drawing of a die-cast part.

As Table I indicates, there is a difference between limits governed by fixed parts of the die and those affected by die parts having relative motion, as the latter are affected, in turn, by the fit of die parts (which must have clearance and are subject to change as dies wear) and, in some cases, by the machine used and the pressure applied to the die and to the metal injected. Measurements across die partings occasionally vary, since a bit of flash may prevent the die from closing as tightly as it normally would. On cores, dimensions are affected by fits and, in certain cases, by the size and degree of rigidity of the core or by wear in the core or of its actuating mechanism. In all cases, however, dimensions can be held within much closer limits, as cast, than in sand castings and cores are not subject to shifting to the extent common in sand cores.

Dimensional limits are affected, of course, by drafts needed to clear the casting from cores and from the die cavity (see Table I). For example, if a hole diameter is given as 0.500 ± 0.005 in., these limits may be held and also provide the taper needed. Thus the hole may measure 0.505 in. at the large end and 0.495 at the small end—the extreme limits allowed. Only in exceptional cases can holes be cored straight (without taper), a fact that the designer should consider. It is a simple matter, however, to ream the hole and make it straight by removing only a slight amount of metal.

When limits specified are too close to be held in the as-cast form, the caster may elect to hold them by machining, but, as this is an extra operation, cost is increased. Many companies purchase castings as cast and machine them where needed in their own shop. If, however, machining is to be done by the caster, this should be made clear on the drawing and allowances for machining cost should be made, as indicated in Rule 14. Unless otherwise agreed, the die caster furnishes castings free of flash but properly adds to his price a charge for flash removal and for any special tools needed in effecting this removal. A part of the charge can be avoided, however, if the purchaser plans to do his own flash removal and so stipulates.

Castings always have a line where the flash formed at the parting comes and the line may project slightly even after the flash proper has been removed. Shaving dies and other flash-removal tools leave toolmarks that are not usually removed unless considerable machining or polishing is done, hence tolerances at the points of flash removal should not be so close as is permitted at other points unless allowances for extra machine work are made. Dies for alloys of high melting point are subject to checking, and, when this occurs, they must be redressed if smooth surfaces are to be maintained. This, of course, changes the dimensions of the casting and affects, to that extent, the limits that can be maintained.

Rule 14. Machining Allowances: Provide sufficient metal at all points where machining is required to permit machining within the limits specified. As with other castings, some allowance for machining is required, although the allowance is relatively slight as compared with that necessary in sand castings. This is partly because the casting itself is held within closer limits and in part because a hard scale is not formed. In general, a cut of $\frac{1}{32}$ to $\frac{1}{64}$ in. below the cast surface is sufficient on die castings, but, if the dimension involved is a long one or the casting is so shaped that warpage occurs and has to be corrected by machining, the total allowance for machining may have to be larger. In general, it is necessary to indicate on the drawing where machining is to be done or to indicate by close limits that machining is required. The die caster then makes the allowance he considers necessary. If he does not do so initially, he can usually increase the size of the cavity or decrease the size of core to allow more metal for machining at a given point. In all cases, however, the drawing should indicate precisely what is required.

Holes are commonly cored very close to size and need only be reamed to remove a very thin layer of metal (and usually the draft) to yield the final size needed. Holes that require tapping are often cored so close to tapping size that no prior reaming or drilling is needed. As most casting alloys are fairly ductile, warpage, if it cannot be avoided completely in the as-cast form, can be largely corrected by subsequent straightening.

Rule 15. Drafts: Allow ample drafts both on cavity walls and on cores. Table I gives the minimum drafts commonly recommended. Though drafts can usually be less than for sand castings, they should not be made so small as to interfere with ready ejection of the casting or easy pulling of cores. If the designer tries to visualize what happens when the casting shrinks upon hardening and in subsequent cooling, the need for draft and the points where it should be ample usually become apparent. Castings tend to shrink away from die walls, but, if cores or projections come at points between side walls, shrinkage may bind the casting to or between these elements and make it hard to eject. The casting may also be distorted or injured by the pressure necessary on ejector pins. If drafts are ample, a slight motion frees the casting and makes ejection easier. Ample drafts may also reduce wear on the die and on core pins and avoid any tendencies to scratch or mark the casting. Though the effects of such items on cost may not be large, they may not be negligible and, unless appearance is noticeably and adversely affected, there is nothing gained by decreasing drafts to a point where they merely handicap the die caster without benefit on any score.

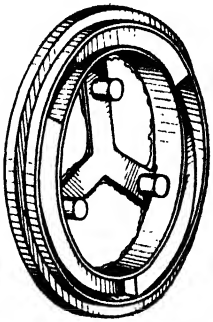

Fig. 14.—To avoid blemishes that ejector pins would make on this die casting if the pins were to bear on the faces of the piece, the die caster provided bosses, one projecting from each of the three runners through which metal enters the casting and in which the metal freezes, coming away from the die with the casting. An ejector pin bears on each boss and the runners with bosses are sheared off flush with the bore when flash is removed, leaving the casting unmarked by ejector pins.

Rule 16. Location of Ejector Pins: See that ejector pins are so located as not to leave objectionable marks on the finished casting. In general, since the designer of a die casting rarely designs the die, he may be unable to say where ejector pins will come. He can specify, however, that the marks left by ejector pins shall not come on certain surfaces, especially where these marks would leave disfiguring blemishes. If question exists on this score, the matter should be discussed in advance with the die caster and locations agreed upon. In some cases, ejector pins may bear upon surfaces that will be cleaned by machining anyway or upon flash or on runners that will be cut away (see Fig. 14). It may be impossible to avoid some marks on the casting but they can usually be brought where they will not noticeably blemish appearance, for example, on a face that is hidden when the casting is later assembled to a mating part.

Once a die is built, it may be costly to change ejector-pin locations and, if the drawing is not marked to indicate requirements in this regard, an extra charge may be made against the purchaser for effecting a change.

Rule 17. Integral Fastening Provisions: Employ integrally cast fastening parts wherever their use will lower assembly cost and meet other requirements. Failure to follow this rule may result in sacrificing an important advantage of the die casting, since it is commonly a very simple matter to add the integral fastening means and such provision often lowers assembly costs materially. The usual integral fastenings are projections added to the casting by providing corresponding holes in the die (see Fig. 15). At assembly, the projections are passed through corresponding holes in a mating part (which may or may not be another casting) and are headed or staked or spun over to effect the fastening. Such projections are in effect integrally cast rivets and may be either solid or hollow, but, if the projections are a part of the casting, they do not have to be handled separately and often can be clinched on assembly by a single blow, especially if the alloy used is sufficiently malleable. Studs without threads are often provided to receive speed-nut fastening devices (Fig. 12), which are quickly applied. The usual stud for this purpose is of circular section but, if it is made of D-shaped section, the speed nut is easily removed. Many

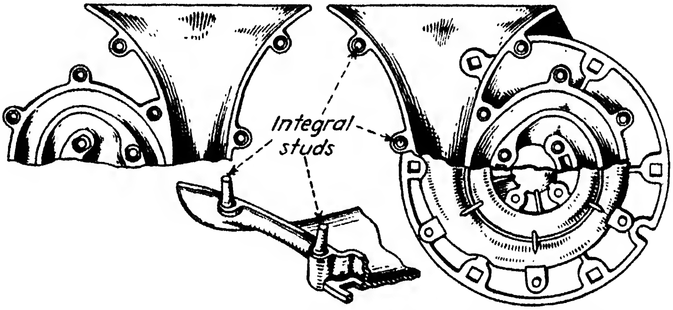

FIG. 15.—One of these zinc-alloy die castings is cast with integral studs and the other half (only part of which is shown) with holes that mate with the studs. Upon assembly, the studs are all headed by a single blow of punches in a press to form a complete automobile-horn body at very low cost. The studs project from a narrow flange that cannot be machined, but the surfaces are cast smooth enough to form a satisfactory joint, especially if a soft gasket or a sealing compound is applied.

other types of speed nuts or speed clips can be employed in recesses of die-cast parts with marked savings in assembly costs.

Where both parts to be assembled are die cast, the holes in one can be cored to mate with projections on the other, as in Fig. 15. Tubular parts of considerable size cast integrally can be provided with a thin lip to be spun over after passing through the mating part or can have threads cut or cast thereon for fastening by a nut. Studs can also be cast integrally and threaded, but this is not usually recommended, since a threaded integral stud is easily broken off unless of large diameter and there is little if any saving over using a bolt, stud, or screw of stronger material applied either as an insert or after casting. Bosses cored for tapping provide a good fastening means in some cases but require tapping and the use of a screw or stud as the actual fastening member.

Although integrally cast projections are often provided on the faces of flanges, this is feasible only when the face of the flange from which the projections protrude does not require machining, as the projections interfere with machining. Integral projections should have at least a small fillet where they join the casting, as this adds considerably to their strength. In all cases, of course, the projections must be so placed as not to interfere with ejection of the casting from the die. In general, this makes it necessary that the axes of the projections be parallel to each other and at right angles to the parting of the die. The projections should have a slight draft to ensure clearing the die when the casting is ejected.

Rule 18. Threads: Provide for cast threads wherever their use reduces cost over that for the same thread cut subsequently. By following this rule, one advantage of the die casting over most other forms of product treated in this book can be taken. There are, however, definite limitations governing the use of cast threads and there is no point in providing them when, as is often the case, they cost more than cut threads. The latter is true of most internal threads, since they have to be formed by threaded cores and such cores have to be unscrewed subsequently. This may involve as much work as tapping the hole and, in addition, is likely to slow the casting cycle unless a rather expensive unscrewing mechanism is provided in the die. For this reason, cast internal threads are generally used only in zinc alloys or those of lower melting point and only when the threads are fairly coarse and when diameters are over ¾ in. and not always then. They are occasionally useful for very steep pitches (see Fig. 16), and, whatever the pitch, the thread can be carried right down to a shoulder or to the bottom of a blind hole, whereas this is not feasible in tapping. All holes requiring fine threads are tapped, and cast inside threads under ¾ in. diameter are rarely feasible or economical.

Most external threads can be cast and it is common practice to cast them when they are coarse and over ¾-in. pitch diameter (unless quite fine in pitch) provided that they are located at a die parting, as in Fig. 13, or are formed by the end of a slide. Threads that come at a parting have a flash at this joint that has to be removed either by a chasing die or by some special tool (Fig. 17). Although it is possible to cast external threads without a parting by using a nut that is withdrawn with the casting and then unscrewed, this practice is slow and rarely required. Cast threads are inclined to be somewhat rough unless chased and it may cost no more to cut the full thread with a die than to cast it and chase it subsequently with a die or other tool. There are, however, many cases where the finish of a cast thread is entirely satisfactory and in such instances casting the thread often proves highly economical. It is essential, of course, that a cast thread be so placed that it either does not form an undercut, or, if an undercut is formed, some expedient, such as a loose nut, must be provided to come away with casting or the latter must be unscrewed from the die.

FIG. 16.—A coarse steep-pitch internal thread such as is shown in this die casting is readily produced in zinc alloy whereas it would be difficult to produce by machining unless cut by a special broach or other special tool, probably costing much more than a core pin for die casting. In any event, a separate machining operation would be required in any method of production except die casting.

Most die-casting alloys are easily and rapidly tapped (the hole often being cored to tapped size) and/or threaded and it is usually wise to discuss the feasibility of forming threads by cast-

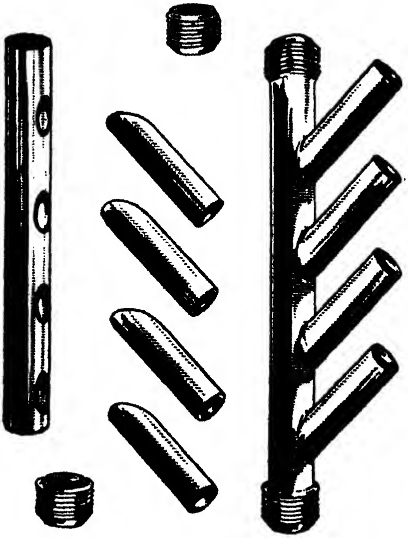

Fig. 17.—The die-cast aluminum-alloy de-icer manifold at the right is produced in one piece with threads cast and the only machining needed is to chase the threads and remove flash. This product, if not cast, would require two end fittings made in a screw machine and five pieces of tubing all welded together, at much greater expense.

ing with the die caster before specifying that they be cast rather than cut.

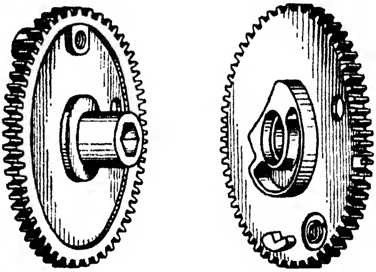

Fig. 18.—In this one-piece die casting, there are combined a complete spur gear with cast teeth, a cam near the center and a small one near the periphery, a hub with a hex recess, and two bosses. To form all these parts separately with equal accuracy and assemble them would be expensive but the die casting can be produced complete at the rate of several a minute.

Rule 19. Gears, Gear Segments, Cams etc.: When a gear, gear segment, cam, ratchet, or other similar part is needed, consider the possibilities of die casting it either as a separate piece or integrally with some other part. Application of this rule often leads to remarkable economies in manufacture, as a complete gear or even the combination of two or more gears, sometimes with an integral shaft, cam, pulley, or similar part, is made every time the die is filled (see Fig. 18). This is in marked contrast to such alternatives as cutting a gear, tooth by tooth, machining its hub, and joining it to one or more other parts, each of which must be produced and machined separately.

Several types of die-cast gears, including spur, internal, bevel helical, and some worm types, can be die cast with a fairly high degree of precision as to tooth form, pitch diameter, tooth spacing, and other dimensions, as indicated in Fig. 19. Allowances for shrinkage and for draft are necessary, but draft for usual tooth length is slight and may even be zero in some spur and bevel types. When draft is needed, it can usually be

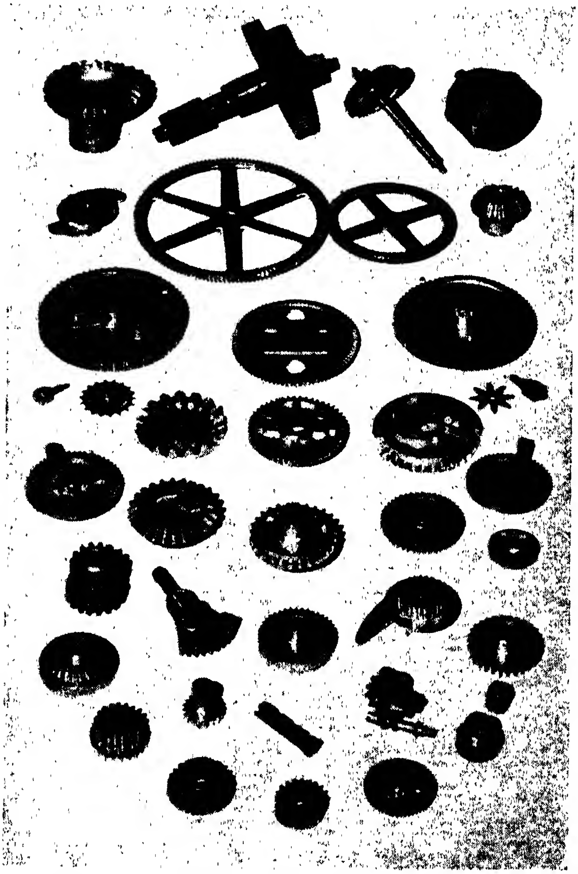

Fig. 19.—All these gears, many of them integral with other parts, are die cast with the teeth formed in the die and require no machine work except, in some cases, removing a slight amount of metal in a shaving die. By no other process can such parts be produced so accurately at so low a cost.

removed by a shaving die, required anyway, in some instances, to remove flash. Two or more gears are often produced as a single casting (see Fig. 19) and with bevel gears or other parts combined. In stepped gears, teeth can end at a face or shoulder where machining of a one-piece unit would be practically impossible. Gear sectors are made as readily as complete gears. Tooth faces can be made so smooth, as cast, as to be suited for a wide variety of applications. Allowable tooth loading and resistance to wear depend, of course, upon the die-casting alloy chosen, its strength and hardness. Precision is far better than for sand-cast gears and, where machining is done, can be as close as for blanks of any material.

Gears for vending and business machines, for coin-operated phonographs, for stokers, and for numerous other light machines are die cast in endless variety, often in combination with integral cams (Fig. 18), other gears, pulleys, shafts, cranks, levers, ratchets, clutch disks, flanges, etc. By no other process is it possible to produce many of these combinations of parts so cheaply with comparable precision, if at all, in integral form.

Rule 20. Combination of Multiple Parts: Design the casting so that it will combine as many parts needed in the completed unit as conditions permit and still avoid undue die complexity and excessive casting costs. If proper study is given to fulfilling this rule, marked savings in production cost can often be realized, for the die-casting process permits combinations not attainable to the same extent with equal precision at so low a cost by any other process. This quickly becomes apparent by the study of castings in the design of which the rule has been followed, as, for example, in Figs. 18 to 20. It is not unusual to find products which could be die cast in one piece or with many fewer pieces made instead largely or wholly by assembling screw-machine parts and stampings (see Fig. 21). A clock frame, for example, can be made from two stamped plates joined by three or four stepped pins and having a dial, bosses,

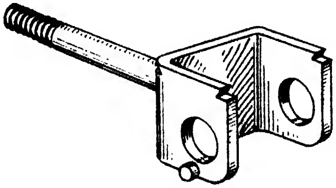

Fig. 20.—Part for a number stamp now die cast in one piece. Formerly the stem and two pivot pins were screw-machine products and the U-shaped end was blanked, pierced, and formed and then riveted to the stem, making a far more expensive assembly than the one-piece die casting.

and other elements added by subsequent operations requiring considerable time for assembly. By die casting, it is possible to make two similar plates with integral projections for spacing, an integral dial, all bosses required with holes cored to or very close to size, integral lettering, and certain other parts substantially ready to receive internal mechanism. Marked economies result largely because so many elements are die cast in only two pieces. Scores of similar cases could be cited but may not become apparent until comparisons such as the above are made.

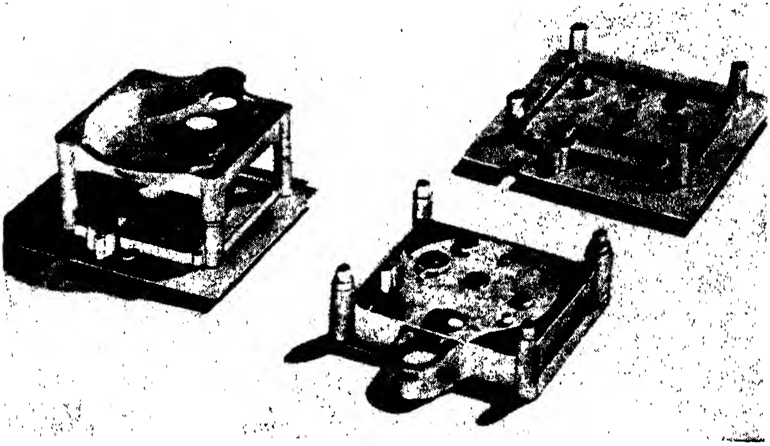

Fig. 21.—Two die castings form this clock frame, of which hundreds of thousands were produced. The hollow spacing members, all bearing bosses, recess for a lamp, and various projections and lettering on the back of rear plate are all integral parts of the die casting. These replace many parts of the usual stamped plates assembled with parts made in the screw machine common in clock construction.

Application of the rule naturally depends upon conditions to be met, but, if the designer keeps in mind the fact that, unless parts of a component *have* to be made so that they can come apart or *must* be separate pieces for some other good reason, they should be made in one piece (if such construction is at all feasible), he is quite certain to find that economies will result if integral construction is sought. In other words, there is little point in making an assembly in two or more parts when it can be made as one piece unless the one-piece unit will cost more or fail to do some essential thing that the multiple-piece unit will do. Every extra part means, in general, extra assembling, extra drawings, extra parts to stock and handle, and other expense, often needless, that can be avoided by careful forethought in designing a die casting combining several parts.

In designing one-piece die castings, however, care needs to be exercised to avoid a construction that will (1) involve undue die cost, not justified by the saving anticipated and (2) require machining costs out of line with the saving in assembly expected. When there is uncertainty on these scores, it is best to secure the constructive criticism of a competent die caster who can evaluate the merits and shortcomings of given alternative designs from a cost standpoint and aid in working out a die-cast product involving minimum cost.

FIG. 22.—All the castings on this gate (a valve body, valve cover, and piston) are parts of a single assembly and are produced at each filling of the combination die, making for high economy in production. The same principle can be applied with corresponding economy to a wide range of small parts under some circumstances, thereby making a single die do work otherwise needing several dies and/or a diversity of machining operations.

Rule 21. Use of Combination Dies: Make use of combination dies wherever cost can be lowered and other conditions can be met by this means. Having decided to use one die-cast part in a given assembly, most careful consideration should be given to the possibility of simultaneous production of one or more other parts for the same assembly in one or more other cavities of the same die. This applies especially where the parts required are small and of such shape that a combination die is readily made and simply operated. In such dies there are produced at each die filling, of course, as many castings as there are cavities in the die (see Fig. 22). As this is done at or nearly at the same rate as for a single casting, the economy realized is considerable even though separate flash removal on each casting of the group is commonly required.

Some users of die castings make it their practice to follow this rule even though certain of the components die cast could, *if made individually*, be produced more cheaply by other means, say by stamping, for example. This is done because the combination casting die gives a whole set of parts in a single operation with a single die in a single machine, whereas, if one or more parts of the assembly are stamped, a separate die is used in a separate machine for each part and needs a separate setup and another operator.

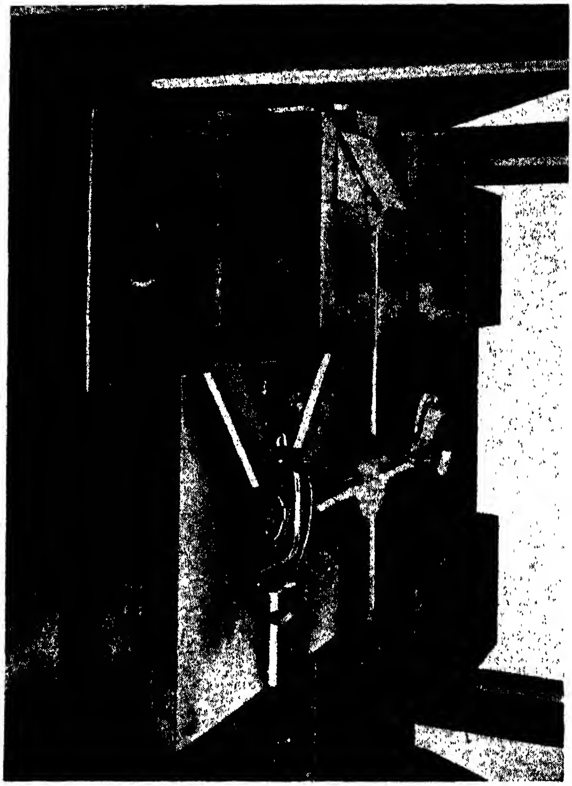

A

FIG. 23.—Set of four unit dies in a common holder. Four castings all of dif-
when the required number of

Although Rule 21 is valid, the qualifying phrase should not be overlooked. Its application is not universal but, where conditions are favorable, great savings frequently result from its application.

Combination dies are feasible under some circumstances when the parts are not for the same assembly but it is, in general, better not to use them unless the parts from each cavity are required in the same number, as otherwise some of the castings produced in the die may have to be scrapped because made in larger numbers than needed. For parts not needed in the same number, small unit dies having one or two cavities per die are little more expensive and, since four or more unit dies are com-

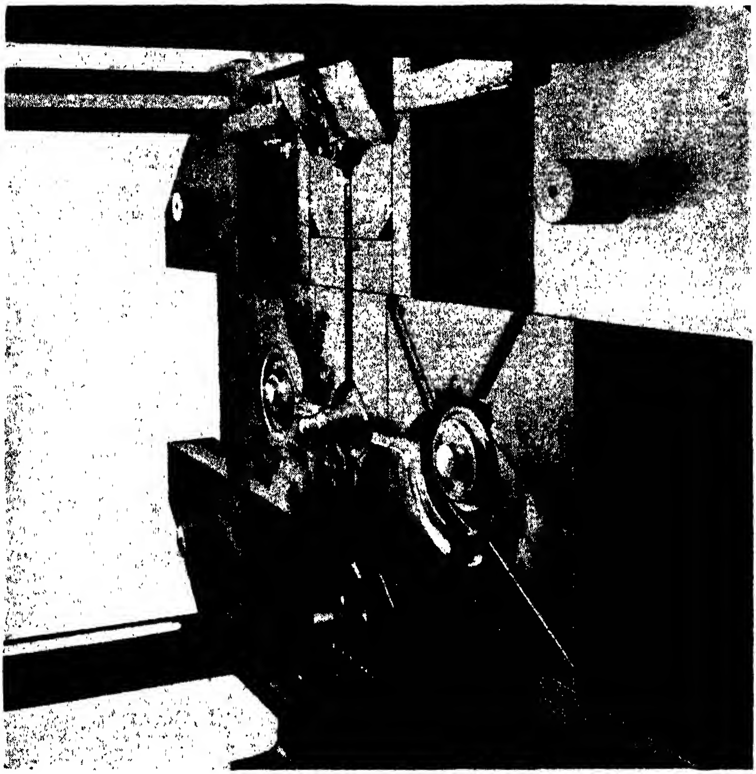

B

ferent shape are made simultaneously in these dies. Each die is quickly changed castings has been produced.

monly filled at the same time, a close approximation to the combination die economy is realized and each die then need be run only for the precise number of castings required.

Most unit dies are locked in a common frame or chase (Fig. 23), usually holding two to six small dies, and are filled simultaneously. They form, in effect, a single combination die but can be changed individually without changing the entire group and so are run only so long as necessary to meet a given order. Setup time, however, may be slightly more than for a single combination die, although most unit dies are designed for rapid changing. Not all castings can be produced in combination dies or even in unit dies, as both types impose certain limitations both on size of castings and on the number and position of cores that can be employed. The chief utility of unit dies and of combination dies is for small, simple castings in which only simple coring is commonly feasible, but low costs are secured with both types.

Rule 22. Inserts and Their Utility: Employ inserts whenever their use results in economy or in securing results that cannot be realized at equal cost by other means. Inserts are useful when it is required that (1) certain parts of the casting must be stronger, harder, or more ductile than if the base metal of the casting alone were used; (2) some element that it is not feasible to cast be produced; (3) the casting act as a matrix for combining into one unit parts that cannot be held together so well or so inexpensively by other means; or (4) some other special combination of benefits not so readily attainable otherwise be secured (see Figs. 24 and 25).

The foregoing rule applies especially to inserts that are cast in place, although it is true, in some instances, for inserts placed in the casting after it is removed from the die. Following comments apply especially to inserts cast in place. Such inserts invariably add somewhat to the cost of the casting not only because they cost a certain amount to make, but also because of the extra time required to place them in the hot die, which tends to slow the job of placement. Inserts thus tend to decrease the rate of casting and the output per man and per machine with a corresponding cost increase per casting. For this reason, die casters often discourage the use of inserts, although they readily admit that their use frequently results in increasing the utility of the casting and is amply justified when equal results are not securable by other means at no greater cost.

In general, the purchaser furnishes the inserts and is properly required to meet the extra costs that their use involves. Inserts should be furnished within close dimensional limits at points where they must fit the die.

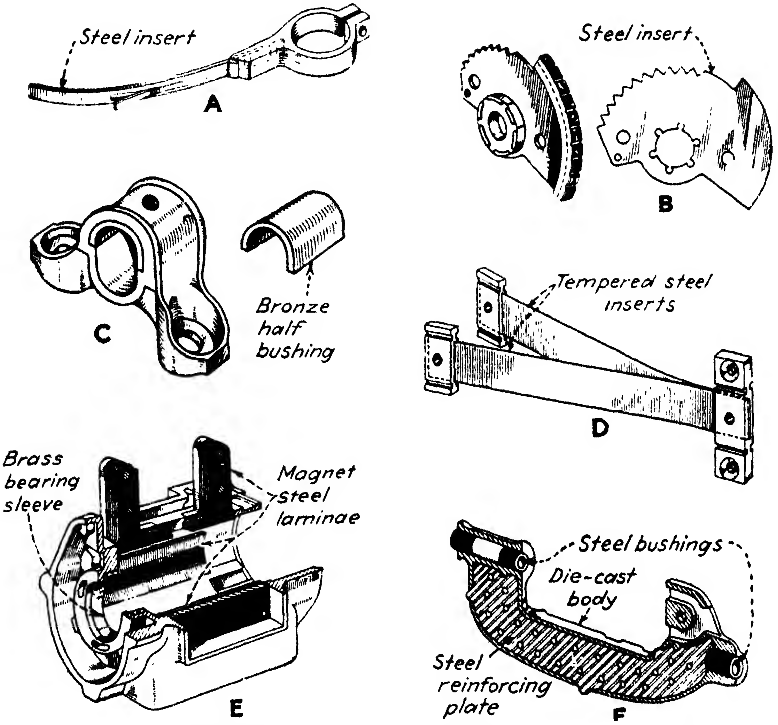

FIG. 24.—Group of die castings in which inserts are cast in place for the reasons indicated: (*A*) Insert provides strength and stiffness in projecting part. (*B*) Hub and numerals on rim are die cast but steel insert provides hard wear-resistant teeth. (*C*) Bronze half-bushing possesses bearing properties superior to those of zinc alloy in the casting itself. (*D*) Flexible tempered-steel springs form inserts around which end fittings are cast. (*E*) Laminated magnet-steel poles pieces provide magnetic properties and bronze bushing bearing properties not obtainable in aluminum alloy, which acts as matrix, binding parts together. (*F*) Bending and shearing strength are increased by perforated steel plate, and hardened steel bushings provide extra strength and wear resistance. Zinc-alloy die-cast matrix binds parts together and is shaped to provide desired external appearance of pipe cutter.

Inserts are most commonly applied either to add greater strength than the metal of the casting affords or to provide wear

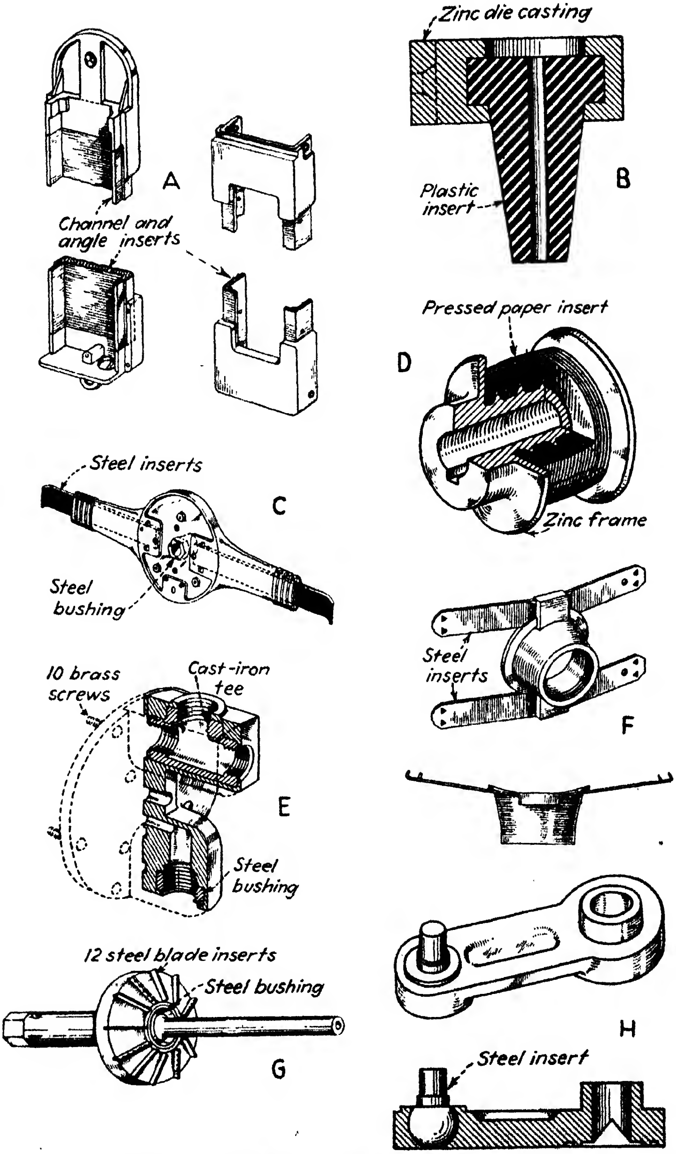

FIG. 25.—All these die castings have inserts cast in place for following reasons: (*A*) End fittings in zinc alloy are cast around aluminum extrusions 39 in. long (for thermometer case) to give desired shape and fastening means. Dies used are of moderate size, as extrusions extend from them. (*B*) Zinc alloy die cast around

resistance through greater hardness or superior bearing properties. Thus such elements as studs, screws, stems, shanks, nuts, bushings, and the like are often cast in place. A flexible element, such as a leaf spring, may be added to good purpose or a dielectric part may be applied. Wood and even paper inserts have been used, the former to lower the weight and the latter to provide a good friction surface (as in a pulley or clutch). Slight charring of such combustible inserts may occur from contact with molten metal, but the latter freezes so quickly that the charring is negligible, at least with an alloy, such as the zinc type, having a medium-low melting temperature. Soft iron, permanent magnets, or other magnetic materials are often used as an insert, as in a magneto frame, providing a property that no die-casting alloy affords (see Figs. 24 and 25).

Some inserts are, except for supporting elements, completely buried in the casting, but in most cases they are partly exposed or protrude from the casting. In all cases they must be so made that they can be clamped or otherwise positively positioned by the die. Occasionally the insert projects through the die and may even be larger than the casting itself (*A*, Fig. 25), but, except in rare cases of this kind, the insert should be made so that, if it is inadvertently left out of the die, molten metal cannot be ejected through the die opening left or so that the casting will become locked in the die in such a way that ejection is impossible.

Most inserts are knurled or are provided with grooves that fill with metal and anchor them in the casting. Inserts should always be so anchored if subjected to stresses that otherwise would result in their being loosened when the casting is put into service. Threaded studs should be provided with a shoulder, which is preferably located slightly above (outside) the surface

---

thermosetting plastic insert, which provides dielectric properties and is not affected by casting process. (*C*) Steel bushing and strips of ¼- by ⅞-in. steel cast inside zinc alloy, which provides desired external shape. Strips add strength and are subsequently welded to steel rim of steering wheel. (*D*) Pressed-paper insert gives zinc-alloy pulley desired friction surface. (*E*) Steel bushing provides hardness and cast-iron toe gives shape and hardness not obtained in zinc casting. Brass screws add strong fastenings. (*F*) Flexible-steel inserts with sharp teeth serve to fasten this zinc-alloy die casting to a fiber conduit. (*G*) Valve seating tool in which hardened blades and central bushing are held in correct relative position by zinc-alloy matrix cast around them, central stem being pressed in place subsequent to casting, which thus requires only a small die. (*H*) Crank for windshield wiper of zinc alloy cast around ball permits ball to oscillate, making split socket unnecessary.

from which the stud projects (Fig. 26). The step helps to prevent the metal from filling the thread of a stud (which is placed in a hole in the die), and the shoulder takes the pull resulting when a nut is tightened on the stud after the latter is passed through a part subsequently fastened to the casting.

Hardened parts, such as cutter blades (*G*, Fig. 25) or springs or bushings, can be cast in place without losing their temper as the molten metal cools too quickly to cause the temper to be drawn. In this, as in other cases, the casting serves as a matrix (*E*, Fig. 24) which fastens the parts in proper relative position and holds them securely and permanently in the casting. In such cases, the casting process effects the assembly and yields a shape that meets requirements and can be made to yield a more pleasing appearance (*C*, Fig. 25) than perhaps would be attained otherwise. Often, the casting is not only a highly effective and convenient means of assembly but is the most economical and practical way (or perhaps the only feasible way) of effecting the assembly. A study of Figs. 24 and 25 makes many of these advantages of the insert apparent and should serve to suggest many similar applications of equal utility.

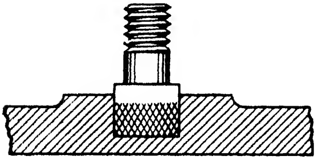

FIG. 26.—Threaded inserts preferably should have a shoulder projecting slightly above the face of the casting or a boss thereof. The shoulder tends to prevent molten metal from finding its way along the stud and into the thread and also (if the hole in the mating part is not larger than the shoulder) takes thrust applied by tightening a nut on the stud that otherwise may be pulled out of the casting if the nut is tightened unduly.

Rule 23. Appearance: Design the casting so that, consistent with meeting other requirements, its appearance will be pleasing and will blend with that of mating parts. Although this rule is fully justified on aesthetic grounds alone, it is warranted also by strictly utilitarian considerations, for it is well recognized that, other things (including price) being equal, the better appearing product greatly outsells that lacking the sales appeal that good appearance affords.

It is generally agreed that appearance is enhanced by simplicity in line and form, rarely by embellishment applied only for decorative purposes. Proportions should be such as to be pleasing to the eye and to convey the impression that the casting has adequate strength and will perform the function for which it is intended. In other words, the design should be functional, that is, should be in harmony with the function the casting must perform. Thus, for example, a handle may be either spherical or of some other shape that the hand can grasp comfortably, never of a shape that will be uncomfortable to the hand; a wheel may be solid or spoked, but it should not have a hub of excessive bulk or a rim so slender as to appear weak or easily damaged. Parts intended for rapid motion can often be streamlined so as to indicate adaptation for speed with minimum resistance (Fig. 27). Such parts preferably have no protrusions such as might tend to check their speed.

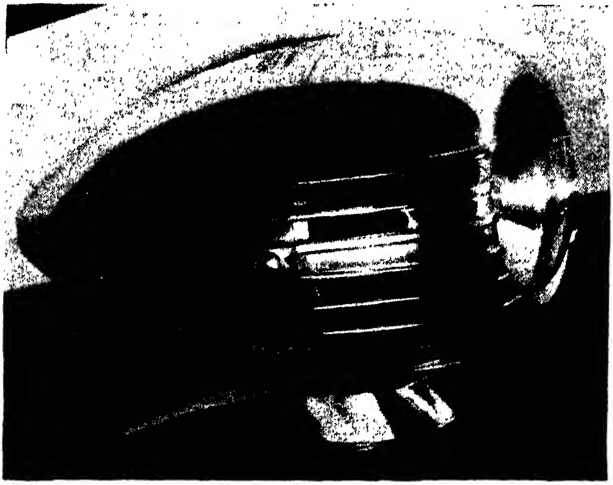

FIG. 27.—This combination horn and head lamp for a bicycle has its housing die cast in a streamlined shape suggestive of speed, the effect being enhanced by a series of horizontal beads. Absence of protrusions is characteristic of streamlined designs.

A design that answers all requirements as to strength and ability to perform its function may still be lacking entirely in eye appeal (Fig. 28). If the engineer does not possess artistic ability, he should leave the matter of appearance to a designer, who is trained to provide lines and forms that appeal to the eye and who, in general, should indicate the color or finish required on exposed surfaces. The proper combination of strength and ability to perform as required should not be sacrificed merely to gain good appearance and need never be if the engineer and the artist cooperate as they should. Neither should demand a construction that sacrifices good points in the other's work so long as the net result deemed necessary is attained. If each is competent and supplements the other's efforts, a pleasing design is likely to result, as in Fig. 29.

There is no logic in designing a die casting or any other product in such a way that it is ugly or lacks eye appeal (if it is exposed to view in use), even though it may perform its function perfectly, when it is just as easy to make the casting have eye appeal. Ugly appearance is almost certain to affect sales adversely whereas attractive appearance tends to stimulate sales, which is usually one primary objective of the design. Internal parts that remain hidden are not subject to this rule, but it is often just as easy to make even such a part pleasing in appearance as to make it unattractive. There are cases in which good appearance necessitates some increase in cost though in others the reverse may be true. In general, the difference is slight, but it

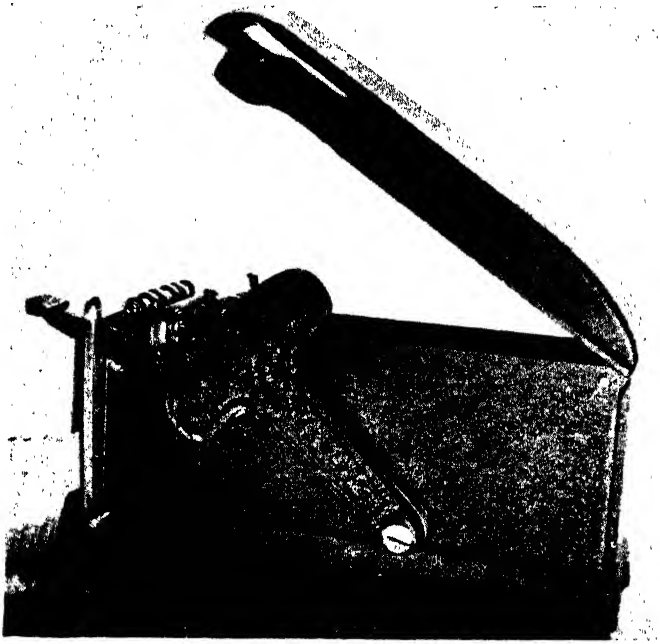

Fig. 28.—Gummed tape dispenser as it appeared in a design entirely lacking in eye appeal although it functioned satisfactorily. Top, base, and lever are sand castings and housing is stamped, as are some other parts.

may be expedient to sanction some increase in cost to gain good appearance.

The foregoing rules could be stated in other ways and certain other rules could be formulated to govern the logical design of die castings. But if those here given are followed and if the final design is checked against each of them, costs will be minimized and many other advantages will be gained.

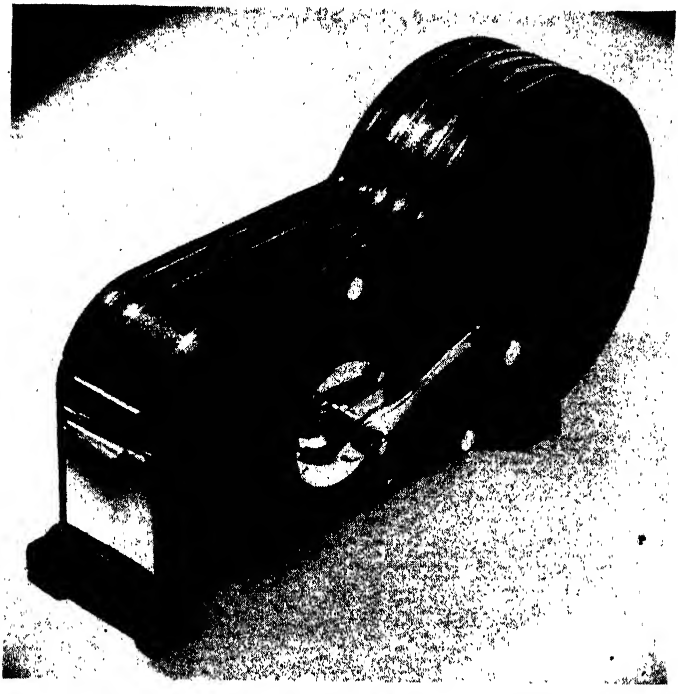

Fig. 29.—Streamlined redesign of dispenser for gummed tape, main housing, cover, and other major parts being die cast in zinc alloy to afford greatly improved appearance as well as a marked reduction in cost. A few parts, mostly hidden, are stamped and others are screw-machine products.

Bibliography

"Change in Materials Facilitates Redesign," *Machine Design*, October, 1940.

Chase, Herbert: "Die Castings," John Wiley & Sons, Inc., New York, 1934.

"Co-operative Design Engineering," *Electrical Manufacturing*, October, 1938.

"Cost-saving Die Castings in Instrument Design, *Instrument Maker*, March–May, 1938.

"Cutting Production Costs by Die Castings," *Aviation*, November, 1940.

"Die Casting for Engineers," The New Jersey Zinc Company.

"Die Casting Fundamentals Point Way to Extra Savings," *Machine Design*, March, 1940.

"Die Casting Inserts Cut Costs," *American Machinist*, Sept. 17, 1942.

"For Good Design—Economize," *Machine Design*, June, 1938.

"Four Low cost Methods of Making Butterfly Valves," *Machinery*, August, 1941.

Herb, Charles O.: "Die-casting," Industrial Press, New York, 1936.

"Inserts in Die Castings Widen Field of Application," *Machine Design*, March, 1937.

"Making the Most of Die Castings," *Electrical Manufacturing*, January, 1940.

"New Method of Cold Forming," *Iron Age*, July 6, 1939.

"Re-design Linked to Materials and Assembly Methods," *Electrical Manufacturing*, January, 1939.

"Re-designed for Die Castings," *Electrical Manufacturing*, March, 1938.

"Redesigning Die Castings," *Product Engineering*, December, 1940.

"Side Holes without Extra Cores," *Metals and Alloys*, August, 1941.

"Stamped or Die Cast, Which, When and Why?" *Iron Age*, Jan. 19, 1940.

Stern, Marc: "Die Casting Practice," McGraw-Hill Book Company, Inc., New York, 1930.

Street, Arthur: "Die Castings," Emmot & Company, Ltd., 1939.

"We Wanted a Better Machine at Lower Cost," *Electrical Manufacturing*, November, 1938.

"What Ten Design Engineers Learned about Die Castings," *Electrical Manufacturing*, June, 1940.

"Which Alloys for Die Cast Parts?" *Electrical Manufacturing*, June, 1939.

CHAPTER II

DESIGN OF SAND CASTINGS FOR PRODUCTION IN QUANTITY[1]

By N. F. Hindle

Why Sand Castings Are Used.—Sand castings are produced in quantities exceeding 20,000,000 tons annually in the United States alone. Such castings promise to continue in still more extensive use, partly because (1) they constitute a basic, low-cost necessity; (2) they lend themselves to highly economical production in large quantities; and (3), among other reasons many ways of increasing their utility are being developed. Crankshafts and camshafts for automotive engines, for example, are now being sand-cast in large quantities, whereas hardly more than a decade ago even the mention of a feasible cast crankshaft would have been received with scorn. Today, engineers can secure almost any set of properties desired in sand castings. Beside being available at moderate cost, sand castings can be produced in an almost unlimited variety of shapes and sizes (some designs being practically unproducible by other means) and with the metal favorably disposed in relation to stresses imposed. As no dies are required, tooling costs for small castings are often much lower than for somewhat similar products suitable for quantity production, although machining costs sometimes offset this advantage.

---

[1] The author gratefully acknowledges his debt to those who have enunciated certain fundamentals of casting design in articles appearing in engineering and metalworking publications, books, and society and association publications of interest to the foundryman as well as to casting designers. The subject is a complicated one. Little strictly basic information is available, though considerable is in process of being accumulated. Designers can assist the foundryman in his search for such information. They can, in turn, by seeking the foundryman's advice on casting production, learn to adapt their designs to efficient quantity production. In short, through cooperation, the designer and the foundryman can help each other and, at the same time, benefit all others concerned.

Production Sand Castings.—Production castings cover a wide variety of sizes and designs. This makes it difficult to cover the subject of design in an all-inclusive manner. Most casting methods other than the sand process, such as centrifugal, permanent-mold, and die casting, are limited in application, in possible alloys that can be used, and in size and/or shape of the casting.

This is not true of the sand-casting process, in which there is little restriction as to size or alloys from which castings can be made on a production basis. As an example, thousands of valves of varying types, cast in a variety of metals, are made by the sand-casting process annually. Many of them are molded on machines by the match-plate method. On the other hand, relatively few engine and car frames in comparison to valves are made in the same period. Such castings weigh from about 60 to 75 tons and yet are considered production jobs. They usually are made by what is termed "pit molding" and in foundry language are "built-up core jobs." Production of such castings requires a large number of core boxes and no pattern. Figure 1 shows a one-piece 70-ton flatcar underframe, 50 ft. long, made by that method.

FIG. 1.—One-piece, cast-steel underframe for 70-ton flatcar 50 ft. long, which is made as a built-up (assembled) core job. (*Courtesy of General Steel Castings Corporation.*)

Obviously, it is difficult to draw up design rules that would be applicable to such a wide range of product. The following suggestions may be used, however, as a guide for designing castings for production regardless of size.

The Casting Process.—Sand castings are made by pouring liquid metals into sand molds. Either ferrous or nonferrous metals can be used, and castings weighing from a fraction of an ounce to over 200 tons can be produced.

Advantage of the Sand-casting Process.—Sand casting lends itself to the formation of intricate as well as of simple integral parts, often with strength and rigidity not obtainable, at equal cost, by any other method of fabrication. In sand castings, the properties of the metal are practically the same in all directions. Metal can be so disposed that it will do the most good. The smooth, flowing lines possible in sand castings often have proved to be important sales advantages. Proper design of sand castings often results in a saving in weight over other methods of fabrication. In other instances, castings have reduced machining time, number of operations, and assembly costs. Small parts that can be cast in sand molds can sometimes be cast in metal molds economically, but the reverse is also true. Many small castings, especially those having cores that could not be withdrawn if made of metal, can be sand-cast readily but cannot be die cast. In addition a large proportion of sand castings are too large to be cast in feasible metal molds, and many alloys suitable for sand casting are not suitable for casting in metal molds. Although it is occasionally possible to duplicate the sand casting, as far as dimensions are concerned, by forging or by welding wrought metals, this can seldom be done at equal cost if quantities required are considerable, and, in many cases, the resulting product is less satisfactory, in certain respects, than the sand casting.

Nature of the Sand-casting Process.—In sand casting, sand is, of course, the material used for both molds and cores. A pattern, commonly of wood or metal, is required to form the cavity into which molten metal is introduced. Variations in contour of cavities or recesses in the metal are produced by cores made largely from sand.

Molding Methods and Patterns.—For high production of small- to medium-sized castings, metal match plates or metal cope and drag patterns are used. These are mounted on molding machines, the type of which depends upon the size and shape of the piece. A flask (a container for the molding material), the contour of which may depend on the shape but mostly on the size of the piece, is placed in position around the pattern, mounted on the platen of the machine, and filled with sand having the correct physical properties for the type of casting being made. The sand then is rammed, squeezed, or jolted into position around the pattern in the flask to produce a mold of the proper hardness, permeability, and strength. Sometimes a combination of jolting, squeezing, and ramming operations is necessary to produce the proper type of mold. Following preparation of the mold, the pattern is withdrawn from the sand mold automatically or semiautomatically, depending on the type of machine used.

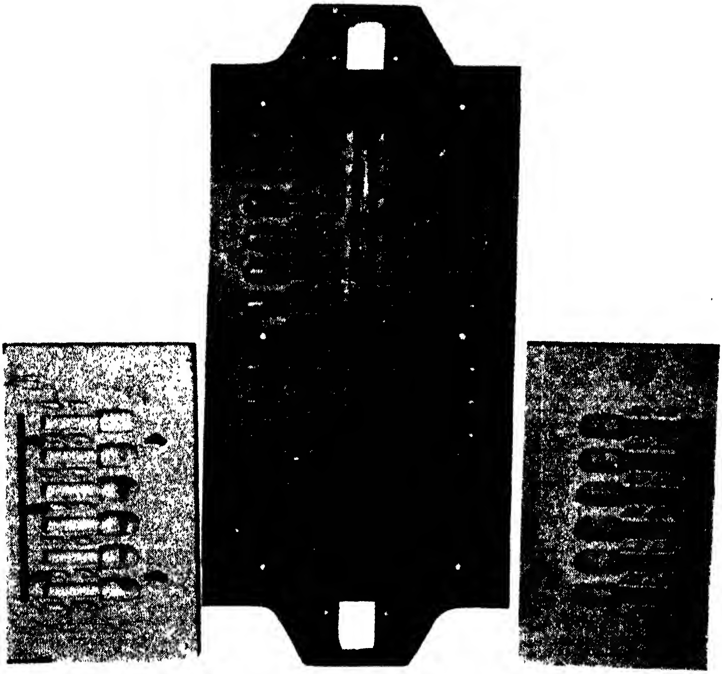

FIG. 2.—Match plate on which 24 duplicate patterns are mounted. With this equipment several thousand castings of this size can be made daily on one machine.

Most patterns for machine molding are designed with gates and risers attached. By machine molding, substantially precise duplicate molds are made by controlling carefully the properties of the sand and the amount of ramming. Usually, in production molding, where cope and drag patterns are used, two machines are operated, one to produce the top part of the mold or cope, and the other the bottom portion or drag. After both parts of the mold have been made, the cores, if any, are correctly placed, the mold is closed and clamped, and the assembled mold is ready for pouring.

Metal match plates are used to produce castings in large quantities. They are used generally for machine molding; they consist of a plate on which the pattern is mounted and are constructed to be lifted either automatically or manually from the mold after it has been properly rammed, depending on the type of molding machine used. For small castings, such as those made on squeezer-type molding machines, the patterns for both the cope and the drag sections of the mold are mounted on the plate, on the top and bottom respectively, in the proper position

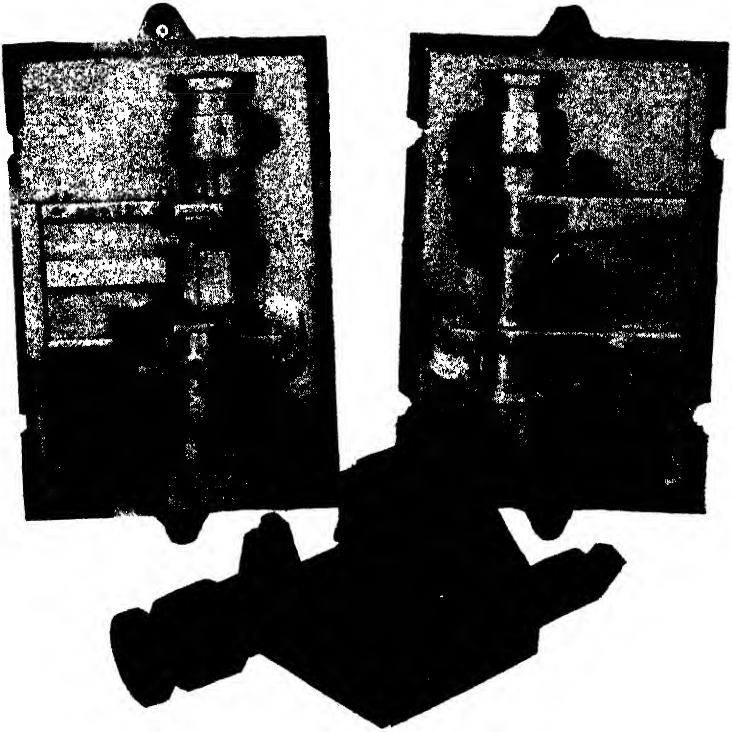

FIG. 3.—Cope and drag views of a match plate in process of making, on which a single pattern is mounted. The number of castings produced daily from the finished plate depends on the speed of the molding machine and the number of machines and duplicate patterns operated on the job. In Figs. 2 and 3, the gating arrangement is a permanent part of the equipment. (*Courtesy of Scientific Cast Products Corporation.*)

and the same match plate is used for making both the cope and the drag. The plate in all match plates serves as the parting for the pattern. For larger castings, it is often more economical to use a pair of match plates, one for the cope and one for the drag. Figures 2 to 4 show various types of match plates.

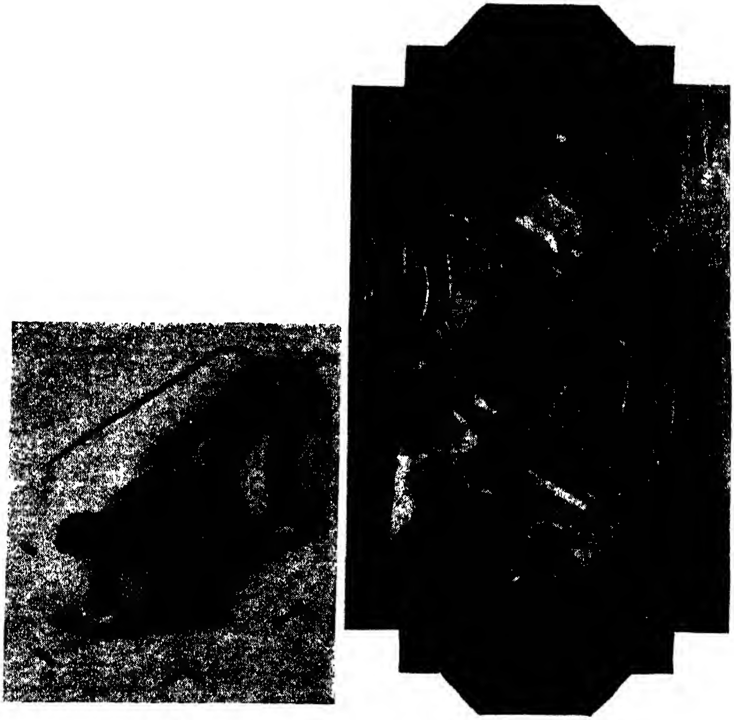

Fig. 4.—An unfinished match plate on which the grating arrangement is not yet mounted nor the holes for the flask pins cut. This illustration shows how an uneven parting line is feasible in some instances and still permits use of match-plate equipment without the necessity of special flasks and machine setups. (*Courtesy of Scientific Cast Products Corp.*)

The limiting factor in the use of match plates is the size and weight of the mold. This in turn is limited by the handling equipment available in the particular foundry. Heavy squeezer molds, which must be handled manually, result in fatigue, and production has been found to fall rapidly toward the end of the day when workmen tire.

Metal match-plate patterns for large quantities of small- and medium-sized castings assure rapid and accurate reproduction.

The initial cost of such equipment is greater than nonmounted patterns but the extra cost is more than justified by other savings when the total pattern cost is spread over a large quantity of castings.

The number of castings on an order that justifies the use of match plates varies, depending to some extent upon local conditions and the equipment in the foundry doing the job. Standard time studies have shown that lower costs can be secured from match plates rather than loose patterns when the order is for only 50 castings. Cases are known where match-plate equipment has been used with economy on orders for as few as 10 castings.

Metal match plates are most adaptable to those castings which have a straight (single-plane) parting and can be made on molding machines of the squeezer type, but straight parting is not necessarily a limiting factor. When the number of castings desired is extremely large and it is impossible for the engineer to design a casting with a straight parting, a match plate having an irregular parting can be used, but this involves the design and use of special flask equipment and special setups on molding machines, which results in additional costs. In such instances, it should be determined whether or not the job will justify the cost of the extra equipment.

Another point to remember is that in match-plate molding, the patterns are drawn upward vertically. There is no opportunity for twisting a pattern to withdraw it from the mold. Designs that do not facilitate a straight draw thus cannot be mounted on match plates unless cores are provided to form the sections that cannot be drawn vertically.

Castings having surfaces so disposed that patterns can be drawn vertically are generally lowest in cost because they can be produced by machine-molding methods, which is the most rapid method of mold production. It is rather difficult to prescribe rules for the design of castings to be machine-molded (other than those of a general nature, as contained in this chapter) because the process is so versatile. The only limitations to machine molding are the size of the molding machine available, the quantity of castings, and the shape of the parting line. Of these three, the last is of least importance if the quantity of castings is large.

Cope and drag patterns are used for castings of considerable size. The size of castings that can be made, however, is limited only by the size of the molding machines, the flasks available, and the flask-handling equipment in the shop. This type of pattern equipment is used for machine molding of what are termed "medium-sized" castings.

Machine molding is not the only type used to make production castings, however. Floor and pit molding are used for large castings made on a production basis, such as the engine frames previously mentioned. In such instances, the mold may comprise several parts in addition to the cope and drag. All parts are assembled, the cores set, and the mold closed and clamped before pouring.

Melting Equipment.—Metal used in the sand-casting process may be produced in a cupola, electric, open-hearth, reverberatory converter, crucible, pot, or air furnace. By far the largest tonnage of cast iron is produced in the cupola, although significant tonnages are produced in the electric and air furnaces. The latter type of furnace melts the majority of the white iron from which malleable iron castings are made. Certain nonferrous alloys are melted in the cupola but the majority are melted in crucibles, pots, and electric furnaces. Large tonnages also are melted in the open-flame and reverberatory furnaces. Steel for castings usually is melted in either direct-arc electric or open-hearth furnaces, although high-alloy steels sometimes are produced in the induction furnace. In some instances, the metal is melted in one furnace and heated to the proper temperature in another. This is called "duplexing." "Triplexing" involves the use of three different furnaces, as, for example, cupola, converter, and electric furnaces.

Pouring.—When metal of proper chemical composition is melted and heated to the proper temperature, it is withdrawn from the furnace, by tapping in some types and in others by removing the container and either pouring the metal directly into molds or into ladles and thence into molds.

Cleaning.—After pouring is completed and the metal has solidified and cooled sufficiently in the mold, the casting is shaken from the mold, the gates and risers are removed, and the casting is cleaned by such processes as abrasive blasting, tumbling, or the like.

TABLE I.—GRAY-IRON CASTINGS—ENGINEERING PROPERTIES*

Plain Gray Irons†

Property	A.S.T.M. class					
	20	25	30	35	40	
Tensile strength, psi	20,000	25,000	30,000	35,000	40,000	45,000
Compressive strength, psi	80,000	90,000	100,000	110,000	125,000	135,000
Brinell hardness	110	140	170	200	230	265
Permanent set	5,000	7,000	9,000	11,000	13,000	15,000
Endurance limit	8-10,000	10-12,000	12-15,000	14-16,000	16-20,000	18-22,000
Modulus of elasticity, psi	11,000,000	12,000,000	13,000,000	14,000,000	15,000,000	16,000,000
Torsion modulus, psi	4,000,000	4,500,000	5,000,000	5,500,000	6,000,000	6,500,000
Toughness (Izod impact)	....	Less than 1				
Creep, 0.1%/1,000 hr.:						
840°F	....	....	8,000	8,000	No data	No data
1000°F	....	....	0	0		
Machinability	Excellent	Excellent	Excellent	Excellent	Good	Fair
Wear resistance	Good	Good	Good to excellent	Excellent	Excellent	Good to excellent
Corrosion resistance	Fair	Fair	Fair	Fair	Fair	Fair
Vibration damping capacity	Excellent	Excellent	Excellent	Excellent	Good to excellent	Good
Specific gravity	7.0	7.0	7.1	7.2	7.3	7.4
Melting point, °F	...	2150-2300				
Thermal expansion × 10^{-6}	6.7	6.7	6.7	6.7	6.7	6.7
Thermal conductivity, c.g.s. units	0.11	0.11	0.11	0.11	0.11	0.11
Electrical resistance, microhms	80-100	80-100	80-100	80-100	80-100	80-100
Magnetic permeability (gausses with H at 100)	9,000	9,000	9,000	9,000	9,000	9,000

Alloy Gray Irons

Property	A.S.T.M. class					
	30	35	40		50	60
Tensile strength, psi	30,000	35,000	40,000	45,000	50,000	60,000
Compressive strength, psi	100,000	110,000	125,000	135,000	150,000	175,000
Brinell hardness	170	190	210	230	250	275
Permanent set	9,000	11,000	13,000	15,000	17,000	19,000
Endurance limit	15,000	17,000	20,000	22,000	25,000	30,000
Modulus of elasticity, psi	14,000,000	15,000,000	16,000,000	17,000,000	18,000,000	20,000,000
Torsion modulus, psi	5,500,000	6,000,000	6,500,000	7,000,000	8,000,000	9,000,000
Toughness (Izod impact)	....	....	Less than 1	......	Up to 2	Up to 2
Creep, 0.1%/1,000 hr.						
840°F	....	9,500	No data	No data	No data	No data
1000°F	....	0	No data	No data	No data	No data
Machinability	Excellent	Excellent	Excellent	Excellent	Good to excellent	Good to excellent
Wear resistance	Excellent	Excellent	Excellent	Excellent	Good to excellent	Good to excellent
Corrosion resistance	Fair to good	Fair to good	Fair to good	Fair to good	Fair to good	Fair to good
Vibration damping capacity	Excellent	Excellent	Excellent	Excellent	Good to excellent	Good to excellent
Specific gravity	7.1	7.1	7.2	7.2	7.3	7.3
Melting point, °F	....	....	2150–2300			
Thermal expansion × 10^{-6}	6.7	6.7	6.7	6.7	6.7	6.7
Thermal conductivity, c.g.s. units	0.11	0.12	0.12	0.12	0.12	0.12
Electrical resistance, microhms	80–100	80–100	80–100	80–100	80–100	80–100
Magnetic permeability (gausses with H at 100)	9,000	9,000	9,000	10,000	10,000	10,000

* These tables give the engineering and physical properties of some typical gray cast irons—both plain and alloy—falling within the familiar A.S.T.M. strength classifications.

Compiled by Frederick G. Sefing.

† **Caution Concerning Composition.**—Compositions of alloys for sand castings, as given in these tables, are merely indicative of those sometimes used. *In no case should they be made the basis of specifications.* When essential, the designer may specify *properties*, based upon accepted types of test specimens and test procedures. However, except for indicating the general type of alloy to be used, the designer should not specify composition unless he first checks with the foundryman who is to make the castings and reaches an agreement upon the composition that the foundry is prepared and equipped to supply. This is because there often are several compositions that produce the same physical properties within a given class of alloys, and certain foundries, by experience and technique, are especially qualified to cast certain alloys to give the desired properties. Other foundries may use different alloys to secure the same results.

TABLE II.—MECHANICAL PROPERTIES AT ROOM TEMPERATURE OF CAST CARBON STEELS

Chemical composition, %						Mechanical properties						
Cast steel No.	Carbon	Manganese	Silicon	Sulphur	Phosphorus	Tensile strength, psi	Yield point, psi	Elongation, %	Reduction of area, %	Impact values	Hardness numbers[c]	Treatment of steel[b]
1	0.11	0.73	0.27	0.027	0.028	56,000	......	33.0	36.0	.....	....	Annealed in commercial furnace
						59,000	26,000	13.2	30.0	3.7[e]	126B	As cast
2	0.11	0.60	0.40	0.035	0.030	57,000	24,000	28.2	53.0	2.1[e]	119B	1475°F. (800°C.) (6), furnace cooled
						60,000	35,000	29.5	59.5	15.0[e]	116B	1650°F. (900°C.) (6), furnace cooled
						60,000	35,000	31.0	54.0	13.7[e]	126B	1825°F. (995°C.) (6), furnace cooled
3	0.15	0.81	0.20	.....	.....	62,000	......	34.0	52.5	.....	....	Annealed
4	0.17	0.67	0.23	0.076	0.089	64,000	35,000	28.5	40.2	3.7[f]	....	1650°F. (900°C.) (5), furnace cooled
5	0.18	0.83	0.30	.....	.....	73,000	......	34.0	49.0	.....	....	Annealed
6	0.20 to 0.25	0.70 to 0.80	0.25 to 0.35	Under 0.03	Under 0.03	67,000	34,000	14.0	18.6	15[g]	....	As cast
						70,000	37,000	26.5	31.6	36[g]	....	1600°F. (870°C.), furnace cooled
7	0.19	0.60	0.44	0.031	0.028	70,000	36,500	33.0	51.2	16[d]	137B	As cast
						71,500	46,500	34.0	58.0	24[d]	139B	1650°F. (900°C.) (1), air cooled
						74,500	48,000	32.0	55.1	26[d]	143B	1650°F. (900°C.) (1), furnace cooled
8	0.19	0.63	0.33	.....	.....	62,000	42,000	36.5	59.8	61[g]	....	1650°F. (900°C.) (1), furnace cooled
						63,500	44,000	39.0	67.0	64[g]	....	1700°F. (930°C.) (1), air cooled 1600°F. (870°C.) (1), air cooled 1200°F. (650°C.) (1), air cooled
9	0.22	0.70	0.32	0.030	0.024	71,000	37,000	33.0	53.5	.....	149B	1650°F. (900°C.) (3), air cooled
10	0.22	0.68	0.28	0.030	0.025	72,000	43,000	32.5	52.4	.....	149B	1650°F. (900°C.) (3), air cooled
11	0.22	0.67	0.34	0.029	0.024	73,500	43,500	33.0	49.7	.....	156B	1650°F. (900°C.) (3), air cooled
12	0.24	0.78	0.28	.....	.....	71,000	......	28.6	47.8	.....	...	1650°F. (900°C.), furnace cooled
						67,000	27,000	22.0	33.0	20.1[d]	119B	As received
						77,000	44,000	30.5	51.0	32.6[d]	136B	1650°F. (900°C.) (1), air cooled; 1525°F. (830°C.) (1), air cooled
13	0.25	0.68	0.32	0.032	0.012	77,000	43,000	31.5	52.0	32.0[d]	136B	1650°F. (900°C.) (1), air cooled; 1525°F. (830°C. (1), air cooled; 600°F. (315°C.) (1), air cooled
						76,000	43,000	31.7	56.0	34.0[d]	133B	1650°F. (900°C.) (1), air cooled; 1525°F. (830°C.) (1), air cooled; 1000°F. (540°C.) (1), air cooled

14	0.26	0.84	0.37	.....	.....	75,000	..	33.0	54.2	.....	...	Annealed, furnace cooled
15	0.27	0.71	0.41	.....	.....	72,000	..	32.9	57.6	35.5[c]	...	1650°F. (900°C.) water quenched; 1300°F. (705°C.), furnace cooled
16	0.27	0.72	0.32	0.034	0.027	82,500	44,500	28.0	47.7	.....	163B	1650°F. (900°C.) (3), air cooled
17	0.27	0.75	0.31	0.034	0.029	74,500	40,000	35.0	45.7	.....	153B	1650°F. (900°C.) (3), air cooled
18	0.27	0.69	0.26	0.032	0.027	76,000	41,500	28.0	44.8	.....	156B	1650°F. (900°C.) (3), air cooled
19	0.28	0.65	0.27	0.032	0.027	74,000	43,000	28.0	42.0	.....	....	1550°F. (840°C.) (7), furnace cooled to 1000°F. (540°C.) air cooled
20	0.28	0.64	0.34	.....	.....	68,000	42,000	33.3	51.1	37.5[g]	....	1650°F. (900°C.) (1), furnace cooled
						69,000	43,500	37.8	63.3	45.5[g]	....	1700°F. (930°C.) (1), air cooled 1600°F. (870°C.) (1), air cooled 1200°F. (650°C.) (1), air cooled
21	0.30	0.79	0.33	0.026	0.030	75,000	36,000	19.5	29.0	17[g]	156B	As cast
						76,000	42,000	25.5	31.5	21[g]	143B	Annealed
						84,000	57,000	30.0	65.0	44[g]	160B	1650°F. (900°C.) water quenched, drawn 1300°F. (705°C.), air cooled
						95,000	68,000	24.0	57.0	....	192B	1650°F. (900°C.), water quenched, drawn 1100°F. (595°C.) air cooled
						108,000	79,000	19.0	46.0	....	220B	1650°F. (900°C.), water quenched, drawn 900°F. (480°C.), air cooled
						119,000	90,000	14.0	33.0	.....	238B	1650°F. (900°C.), water quenched, drawn 700°F. (370°C.), air cooled
						130,000	100,000	9.0	18.0	.....	250B	1650°F. (900°C.), water quenched, drawn 500°F. (260°C.), air cooled
22	0.31	0.94	0.31	.....	.....	78,000	......	26.2	41.3	....	....	1650°F. (900°C.), furnace cooled
23	0.31	0.75	0.42	0.029	0.034	85,500	54,500	29.5	53.4	21[d]	146B	1650°F. (900°C.) (1), air cooled
						92,500	66,500	26.0	61.8	32[d]	164B	1650°F. (900°C.) (1), water quenched 1200°F. (650°C.) (1), air cooled
						77,000	43,500	28.7	44.5	14[d]	134B	1650°F. (900°C.) (1), furnace cooled
						83,500	53,000	29.3	51.9	20[d]	146B	1650°F. (900°C.) (1), air cooled 930°F. (500°C.) (3), air cooled
24	0.32	0.80	0.37	0.025	0.013	86,500	48,000	29.0	55.0	40[g]	....	1700°F. (930°C.) (1), air cooled 1600°F. (870°C.) (1), air cooled
						80,000	49,500	28.0	56.0	43[g]	....	1700°F. (930°C.) (1), air cooled 1600°F. (870°C.) (1), air cooled 1200°F. (650°C.) (1), air cooled
25	0.37	0.79	0.40	0.008	0.019	84,000	....	23.9	32.9	5[c]	....	As received
						82,000	....	26.7	49.9	10[c]	....	1650°F. (900°C.) (4), water quenched; 1260°F. (680°C.) (6), air cooled
						88,000	....	21.4	28.3	6[c]	....	1650°F. (900°C.) (4), air cooled; 1290°F. (695°C.) (6), air cooled
26	0.39	0.86	0.41	0.008	0.019	72,000	....	16.8	31.4	6.0[c]	....	As received
						86,000	....	23.5	38.7	24.5[c]	....	1650°F. (900°C.) (4), water quenched; 1260°F. (680°C.) (6), air cooled
						83,000	....	20.7	29.5	14.0[c]	....	1650°F. (900°C.) (4), air cooled; 1290°F. (695°C.) (6), air cooled

Continued on next page where footnotes are given.

TABLE II.—MECHANICAL PROPERTIES AT ROOM TEMPERATURE OF CAST CARBON STEELS.—(*Continued*)

	Chemical composition, %					Mechanical properties						
Cast steel No.	Carbon	Manganese	Silicon	Sulphur	Phosphorus	Tensile strength, psi	Yield point, psi	Elongation, %	Reduction of area, %	Impact values	Hardness numbers[a]	Treatment of steel[b]
27	0.42	0.69	0.43	.....	.....	77.000	....	22.0	25.0	6.5[c]	....	1650°F. (900°C.) (4) furnace cooled
28	0.42	0.71	0.54	.....	.....	81.000	....	23.9	37.9	20.5[c]	....	1650°F. (900°C.) (4), oil quenched; 1250°F. (675°C.) (6), furnace cooled
29	0.42	0.71	0.54	.....	.....	82.000	....	26 4	44.2	17.7[c]	....	1650°F. (900°C.) (4), water quenched; 1250°F. (675°C.) (6), furnace cooled
30	0.46	0.73	0.28	.....	.....	93.000	....	22 0	33 6	.....	....	Annealed, furnace cooled
31	0.48	0.68	0.41	0.010	0.019	83.000	....	22 6	27.1	7[c]	....	As received
						88.000	....	24 9	41 9	10[c]	....	1650°F. (900°C.) (4), water quenched; 1250°F. (675°C.) (6), air cooled
						91.000	....	21.3	29 5	8.5[c]	....	1650°F. (900°C.) (4), air cooled; 1290°F. (695°C.) (6), air cooled
32	0.50	0.59	0.54	.....	.....	84,000	....	19.8	24.5	5.5[c]	....	1650°F. (900°C.) (4), furnace cooled
33	0.51	0.56	0.38	.....	.....	83.000	....	19.5	19.2	5.8[c]	....	1650°F. (900°C.) (4), air cooled; 1400°F. (760°C.) (6), furnace cooled
34	0.51	0.69	0.44	.....	.....	84.000	....	22.5	26 6	5.9[c]	....	1690°F. (920°C.) (5), air cooled; 1290°F. (695°C.) (6), furnace cooled

[a] The letter B designates Brinell hardness, and the letter S, Scleroscope hardness.
[b] Numbers in parentheses correspond to number of hours at temperature.
[c] Fremont, kg.-m.
[d] Charpy, ft.-lb.
[e] Values in m.-kg. per sq. cm.
[f] Specimen 30 × 30 × 160 mm. Cylindrical notch 4 mm. in diameter, 15 mm. deep. Values in m.-kg. per sq. cm.
[g] Isod, ft.-lb.
[h] Specimen 10 × 10 mm. Notch 2 mm. wide. 5 mm. deep. Value in m.-kg. per sq. cm.

Inspection.—The casting is inspected at various steps in the cleaning process and finally just before shipment. In well-managed and properly equipped foundries, all steps in the process are carefully planned and controlled to ensure the best product possible. As the design of the casting often affects the cost of one or many steps in the process of production, the more familiar the designer becomes with production technique, the better is his design likely to be in respect to minimum cost as well as in other respects.

Selection of Material. *Cast Iron.*—One of the first decisions the designer must make concerns the choice of the metal or alloy to be cast. Use of such general terms as "cast iron" or "steel" is too indefinite. There are uncounted types of cast iron. The American Society for Testing Materials (A.S.T.M. Specifications A48-41) lists seven classes of cast iron based on strength alone. Some properties of cast irons are shown in Table I. There are many other classes of cast irons than the seven there mentioned. In some, strength exceeds that in the highest classification by as much as 20,000 psi. Others are especially designed metallurgically for heat resistance, corrosion resistance, wear resistance, machinability, hardness, and other properties.

Steel.—There are also many types of steel for castings and over 70 known alloy steels being produced in the foundry industry today with tensile strength varying from 40,000 to 250,000 psi and elongations from 0 to 75 per cent. Noteworthy improvements have been made in the properties of straight-carbon cast steels through improved control of all operations, melting, heat-treating, and molding. Table II shows the compositions and properties of some cast carbon steels and Table III gives the same information for some low-alloy steels.

Malleable Iron.—Malleable iron is no longer merely that. In addition to the regular malleable irons, produced under A.S.T.M. Specifications A47-33, Grades 35018 and 32510, short-cycle and pearlitic malleable irons are available. These are "tailor-made" malleables and have special properties for use in many engineering applications. Table IV shows some properties of regular malleable irons, while Table V gives the properties of some pearlitic malleable irons.

TABLE III.—COMPOSITION AND MECHANICAL PROPERTIES

Type of cast steel	Steel no.	Chemical composition, %							
		Carbon	Manganese	Silicon	Nickel	Chromium	Molybdenum	Vanadium	Copper
Nickel	1	0.15	0.58	0.30	2.90	...	...	.	.
	2	0.19	0.91	0.30	2.14	...	...	....	..
	3	0.26	0.90	0.18	1.76	....	. ..	....	. .
	4	0.30	1.05	....	1.95	....	....	....	.
	5	0.40	0.52	....	2.39	. .	....	....	...
	6	0.35	0.82	0.31	3.00	. .	....	....	. ..
	7	0.30	0.68	0.38	3.14	....	. ..	....	....
Medium manganese	8	0.32	1.14	0.36	....	....	...	....	. ..
	9	0.32	1.33	0.33	....	....	. ..	....	....
	10	0.35	1.51	0.31	. ..	....	....	....	....
	11	0.34	1.77	0.34	....	....	....	....	....
	12	0.25	1.43	0.55	. ..	....	....	....	....
Chromium	13	0.39	0.84	0.48	. .	0.79	....	....	....
	13	0.39	0.84	0.48	....	0.79	....	....	....
	13	0.39	0.84	0.48	...	0.79	....	....	....
	14	0.28	0.47	0.81	....	3.05	....	....	....
	15	0.36	0.78	....	...	2.97	....	....	....
	16	0.41	0.67	....	...	2.56	....	....	....
	16	0.41	0.67	....	...	2 66	....	....	....
	17	0.36	0.74	0.41	. .	0.83	....	....	....
Molybdenum	18	0.30– 0.40	0.70	0.40	..	. .	0.30– 0.40	....	....
	19	0.24	0.64	0.36	....	....	0.50	....	....
	20	0.30	0.70	0.30	....	....	0.54	....	....
	21	0.26	0.64	0.30	....	....	0.51	....	....
Vanadium	22	0.22	0.70	0.40	....	....	....	0 20	....
	23	0.38	0.87	0.32	....	. ..	. .	0 20	. ..
Silicon	24	0.17	1.11	1.11	....	....	....	....	....
Copper	25	0.13	0.62	....	....	....	. ..	....	1.00
	25	0.13	0.62	....	....	....	....	....	1.00
	26	0.29	....	....	....	....	....	....	0.94
	26	0.29	....	....	....	....	....	. ..	0 94
	27	0.31	0.75	0.42	....	....	....	. ..	1 21
	27	0.31	0.75	0.42	....	....	....	....	1.21
	27	0.31	0.75	0.42	....	....	....	....	1.21
	28	0.31	0.75	0.42	....	....	....	....	1.76
	28	0.31	0.75	0.42	....	....	....	....	1.76
	28	0.31	0.75	0.42	....	....	....	....	1.76
Medium manganese-nickel	29	0.33	1.20	0.38	1.06	....	....	....	....
	30	0.33	1.20	0.38	1.06	....	....	....	....
	31	0.30	1.10	....	1.00	....	....	....	....
	32	0.28	1.56	....	1.27	....	...	....	....
	33	0.29	1.44	....	1.41	. ..	....	....	....
	34	0.30	1.44	....	2.30	....	.. .	.. .	....
Nickel-chromium	35	0.39	0.86	0.37	1.78	0.67	....	....	....
	36	0.33	0.75	0.39	1.50	0.85	....	....	....
	37	0.40	0.52	0.37	2.39	1.00	. .	....	....
	38	0.35	0.80	0.40	1.30	0.94	....	....	....
	39	0.33	0.65	0.16	3.19	0.65	....	....	....
Nickel-molybdenum	40	0.32	0.70	....	1.35	....	0.32	...	....
Nickel-vanadium	41	0.29	1.02	0.31	1.49	....	. .	0.13	....
Medium manganese-chromium	42	0.40	1.40	0.50	....	0.60	....	....	....
Medium manganese-molybdenum	43	0 30	1.35	0.35	....	....	0.35	....	....
	43	0.30	1.35	0.35	. ..	...	0.35	....	....
Medium manganese-vanadium	44	0.30	1.65	....	....	....	....	0.10	....
					Ti‖				
Medium manganese-titanium	45	0.30	1.68	0.43	0.042	(Approx.)	....	....	....
	46	0.26	1.46	0.37	0.042	(Approx.)	...	....	....
Chromium-molybdenum	47	0.39	0.80	0.40	....	0.80	0.20	....	....
	47	0.30	0.80	0.40	.	0.80	0.20	. ..	....
	48	0.39	0.81	0.39	....	0.69	0.43	....	....
	49	0.27	....	....	...	1.00	0.50	...	. ..
	50	0.90	0.45	0.41	....	1.36	0.30	....	....
	51	0.22	0.71	0.50	....	4.02	0.46	...	....
	52	0.25	0.46	0.41	....	5.22	0.45	....	....
	52*	0.20	0.68	0.37	....	2.05	1.05	....	....

For footnotes, see p. 83 where table is continued.

OF REPRESENTATIVE LOW-ALLOY CAST STEELS

Mechanical properties						
Tensile strength, psi	Yield point, psi	Elongation in 2 in., %	Reduction of area, %	Brinell hardness	Impact value	Heat-treatment, °F.
76,800	61,200	33.1	55.5	...	31‡	Normalized 1750, normalized 1550, drawn 1200
85,100	51,250	29.0	52.0	...	.....	Normalized and drawn
92,000	52,000	28.5	39.8	...	.....	Annealed 1475
104,550	63,550	25.0	54.8	...	....	Normalized 1650, drawn 1200
145,900	128,000	20.0	58.6	288	.....	Normalized 1500, oil quenched 1425, drawn 1100
111,000	72,000	13.0	22.0	...	.....	Annealed 1435, drawn 1110 (furnace cooled)
85,000	64,000	31.0	58.5	...	33‡	Normalized 1700, normalized 1525, drawn 1200
81,000	42,000	28.0	45.0	...	.....	Normlaized 1650, drawn 1250
88,000	57,000	25.0	56.0	...	.....	Normalized 1650, drawn 1250
97,500	55,800	25.0	53.0	..	22*	Annealed 1650, normalized 1550, drawn 700
107,000	61,000	24.0	52.0	...	23*	Annealed 1650, normalized 1550, drawn 700
92,000	62,000	24.1	53.2	...	30†	Water quenched 1650, drawn 1185
122,000	77,850	13.5	20.0	228	...	Normalized 1650, normalized 1550, drawn 700
110,850	67,150	17.0	25.0	217	...	Normalized 1650, normalized 1550, drawn 1200
120,450	90,200	16.0	35.7	241	....	Normalized 1650, oil quenched 1550, drawn 1200
150,000	125,000	13.0	23.0	..	...	Normalized 1650, normalized 1550, drawn 1000
151,000	127,000	14.0	29.0	...	.....	Water quenched 1650, drawn 1150
169,000	143,000	12.0	20.0	...	...	Normalized 1650, drawn 1100
142,000	117,000	19.0	39.0	285	....	Normalized 1650, drawn 1200
95,000	55,000	18.0	31.0	213	29*	Normalized 1650, drawn 1250
83,200	58,100	21.0	33.0	208	28*	Annealed, normalized, drawn
73,650	46,400	33.0	46.0	153	.....	Normalized 1650, drawn 1200
75,800	52,000	32.0	48.0	163	....	Normalized 1650, drawn 1200
75,100	46,100	31.0	53.0	156	.....	Normalized 1650, drawn 1200
79,000	46,000	31.0	58.6	..	50.2*	Double normalized,§ drawn
94,100	64,900	24.0	53.9	...	30*	Double normalized,§ drawn
71,000	45,000	27.0	54.0	...	....	Annealed
70,000	50,000	31.0	54.1	143	....	Normalized 1600
89,000	70,000	23.5	49.7	196	...	Normalized 1600, drawn 950
88,000	58,000	19.0	31.2	179	....	Normalized 1550
104,000	76,000	20.5	36.4	207	....	Normalized 1550, drawn 1000
97,500	68,000	25.5	51.0	170	17‡	Normalized 1650
90,000	61,000	24.8	43.6	161	12‡	Annealed 1650
110,500	82,500	21.0	45.8	201	11‡	Normalized 1650, drawn 930
114,500	86,000	19.8	42.0	216	11‡	Normalized 1650
90,500	58,500	24.5	41.4	159	10‡	Annealed 1650
116,500	89,500	18.8	38.8	215	10‡	Normalized 1650, drawn 930
100,750	62,000	21.0	34.0	179	25*	Annealed 1600
99,000	63,500	23.5	48.0	187	43*	Normalized 1600, drawn 1200
95,000	60,000	23.5	47.5	180	47.5*	Normalized 1650, drawn 1200
96,000	63,000	26.0	58.5	...	.....	Normalized 1600, drawn 1100
102,000	65,000	26.7	58.9	...	.....	Normalized 1600, drawn 1100
114,000	64,000	15.7	25.5	...	.....	Water quenched 1650, drawn 1250
112,000	66,500	19.0	32.0	...	27*	Normalized 1600, drawn 1200
99,000	60,000	22.5	45.0	...	41*	Annealed 1700, normalized 1650, drawn 1250
145,900	101,500	20.0	58.6	288	....	Normalized 1500, oil quenched 1425, drawn 1100
102,000	67,000	21.0	41.0	...	38*	Annealed 1700, normalized 1650, drawn 1250
128,000	108,000	14.5	36.0	...	.....	Oil quenched 1510, drawn 1100
91,045	60,536	24.8	54.5	...	.....	Annealed 1850, normalized 1700, drawn 1275
93,000	65,000	29.0	57.8	...	55.5*	Double normalized and drawn
120,000	75,000	23.0	52.0	...	10*	Annealed 1650, normalized 1550, drawn 700
96,000	68,000	25.5	57.5	210	23‡	Normalized 1650, drawn 1250
102,000	76,000	25.8	58.0	228	29‡	Oil quenched 1575, drawn 1250
101,000	67,000	27.0	56.0	...	45*	Double normalized and drawn
106,000	78,000	28.0	59.0	...	40*	Normalized 1600, drawn 1050
91,000	63,000	31.0	55.0	...	55*	Normalized 1600, drawn 1050
110,000	80,000	20.0	40.0	210	.....	Normalized 1550, drawn 1250
112,000	94,000	18.0	50.0	230	.....	Water quenched 1550, drawn 1250
103,000	73,000	19.0	40.0	...	26*	Normalized and drawn
107,000	85,500	20.0	46.7	...	.....	Oil quenched 1575, drawn 1250
156,000	95,000	9.0	9.0	...	.....	Normalized 1525, drawn 1100
121,000	91,000	19.0	51.0	...	.....	Normalized 1650
102,850	77,000	21.0	53.8	190	.....	Not given
110,500	86,250	18.0	42.0	207	.....	Double normalized and drawn

TABLE III.—COMPOSITION AND MECHANICAL PROPERTIES

Type of cast steel	Steel No.	Chemical composition, %							
		Carbon	Manganese	Silicon	Nickel	Chromium	Molybdenum	Vanadium	Copper
Chromium-vanadium	53	0.30	0.80	0.40	....	1.00	.	0.10	
Chromium-tungsten	54	0.25	0.53	0.42		5.87	.	. .	(W)0.80
Medium manganese-chromium-silicon-vanadium	55	0.42	1.45	0.80	.	0.38	.	0.16	. . .
Nickel-chromium-molybdenum	56	0.37	0.80	0.40	1.75	0.75	0.40	....	....
	57	0.72	0.88	0.30	0.75	1.56	0.38	....	....
	57	0.72	0.88	0.30	0.75	1.56	0.38	..	. .
Medium manganese-chromium-molybdenum	58	0.34	1.19		.	0.96	0.34	....	. .
Medium manganese-nickel-vanadium	59	0.28	1.34	0.39	1.72	....	. . .	0.11	....
Medium manganese-silicon-copper	60	0.15	1.28	1.11	.	....	...	....	1.97
	61	0.23	1.11	1.58	.	....	....	....	1.51
Medium manganese-chromium-vanadium	62	0.34	1.51	0.29	. .	0.47	..	0.16	
Medium manganese-copper-vanadium	63	0.16	1.43	0.26	. ..	..		0.11	1.15
	64	0.29	1.12	0.44				0.10	1.04
Medium manganese-copper-titanium	65	0.29	1.17	0.38		0.05 Ti (approx.)		.	1.07
Chromium-molybdenum silicon	66	0.30	0.68	1.05	2.15	. .	0.52	...	...
	67	0.29	0.68	0.78	5.20	....	0.52	....	....

Nonferrous.—With the application of heat-treatment, age, and precipitation hardening of aluminum and magnesium alloys and some of the brasses and bronzes, the fields for nonferrous castings have been considerably widened. The properties of many of these alloys can be varied to suit the engineer's requirements. Table VI gives normal compositions and properties of various classes of nonferrous alloys.

Specifications.—When a cast metal is specified, the general type of alloy, such as steel, malleable iron, cast iron, brass, bronze, aluminum, magnesium, lead, tin, nickel-base, should be named but the composition should not be specified, as many foundries may produce a material of a general type that will meet strength and other requirements by several different methods or by several different compositions and treatments. The engineer and designer desire certain properties in a given shape of casting. It is not of particular interest, so long as the piece meets the service requirements, how those properties are obtained.

Because of the large variety of metals cast in foundries, the large number of types within each class, and the many treatments

OF REPRESENTATIVE LOW-ALLOY CAST STEELS.—(*Continued*)

Mechanical properties						Heat-treatment, °F.
Tensile strength, psi	Yield point, psi	Elongation in 2 in., %	Reduction of area, %	Brinell hardness	Impact value	
94,300	64,750	27.5	57.1	. .	. . . .	Double normalized and drawn
125,000	100,000	18.0	45.0	. .	. . .	Normalized 1750, drawn 1250
116,000	74,000	19.0	43.0	. .	.	Normalized 1650, drawn 1150
149,000	90,000	17.0	25.1	262	27*	Normalized, drawn 1250
146,000	56,000	7.5	8.5	270	. .	Annealed 1800
216,000	183,000	6.0	12.5	415	. .	Annealed 1800, normalized 1650, drawn 1000
115,800	82,450	21.0	55.0	227	. .	Water quenched 1600, drawn 1300
103,050	71,500	23.0	40.4	.	43.3*	Annealed
85,800	64,000	28.1	44.8	. .	.	Annealed 1740
92,200	69,200	29.6	44.2	. .	.	Annealed 1740
98,000	72,000	25.0	54.0		44*	Double normalized 1650-1650, drawn 1200
90,900	69,950	30.0	60.0		76.2*	Double normalized 1700–1550, drawn 750
106,150	88,150	24.0	50.6		42.0*	Double normalized 1700–1550, drawn 950
96,400	73,200	30.0	57.0	. . .	61.0*	Double normalizd 1650–1500, drawn 750
107,750	87,000	26.0	51.9		30.8*	Double normalized 1650-1500, drawn 950
100,000	68,000	25.5	51.9	.	31.0*	Normalized 1600
98,000	71,000	26.2	55.8	.	28.8*	Normalized 1600, drawn 1150
120,500	89,600	19.0	39.0	197		1700, 4 hr., cool to 1500, hold 6 hr., air cool; 1250, 4 hr., furnace cool
103,500	78,500	20.5	47.0	197	. .	1700, 4 hr., cool to 1500, hold 6 hr., air cool; 1250, 4 hr., furnace cool

* Izod impact value, in ft.-lb.
† Fremont impact value, kg.-m. of work absorbed in breaking standard Fremont bar.
‡ Charpy impact value, ft.-lb.
§ Impact value, m.-kg. per sq. cm. (×1.12 = ft.-lb. per sq. in.).
‖ Titanium added: 5 lb. ferro-carbon-titanium per ton charge.

that may be applied to the casting to produce intentionally a given set of properties after the casting has been made, any compilation giving typical analyses and physical properties is merely indicative of what can be accomplished under particular sets of conditions. Hence, tabular data included *here are for guidance only and should not be used in specifying material.*

Space limitations preclude an extended discussion of the various types and classes of cast alloys. In general, it may be stated that the most economical material is the one that gives satisfactory service at lowest unit cost. Again, in general, material costs for the production of nonferrous castings constitute a greater proportion of the total cost than is the case with ferrous casting. To cite a given casting and give the cost of manufacture in a variety of metals means little as it is the ultimate cost of the part, which takes into consideration its service life, that is of real significance. A part cast in one material may cost initially much less than if cast in another metal, but if the service

TABLE IV.—SUMMARY OF DATA ON THE COMPOSITION AND PROPERTIES OF MALLEABLE IRON

	A.S.T.M. Grade 35018	A.S.T.M. Grade 32510
Chemical composition,*—white iron:		
Carbon, %	1.75–2.30	2.25–2.70
Silicon, %	0.85–1.20	0.80–1.10
Manganese, %	Less than 0.40	Less than 0.40
Phosphorus, %	Less than 0.20	Less than 0.20
Sulphur, %	Less than 0.12	0.07–0.15
Chemical composition, finished product:		
Temper carbon, %	Less than 1.80	Less than 2.20
Silicon, %	Less than 1.20	Less than 1.10
Manganese, %	Less than 0.40	Less than 0.40
Phosphorus, %	Less than 0.20	Less than 0.20
Sulphur, %	Less than 0.12	Less than 0.13
Physical properties:		
Specific gravity	7.20–7.45	7.34–7.25
Shrinkage allowance, in. per ft.	$\frac{3}{16}$	$\frac{3}{16}$
Coefficient of thermal expansion		
Per °C	0.000012	0.000012
Per °F	0.0000066	0.0000066
Specific heat, cal. per gram per °C. Varies with temperature; average value between 20 and 100°C	0.122	0.122
Mechanical properties:		
Tensile strength, psi	53,000–60,000	50,000–52,000
Yield point in tension, psi	35,000–40,000	32,500–35,000
Elongation in 2 in., %	18–25	10–18
Modulus of elasticity in tension, psi	25,000,000	25,000,000
Poisson's ratio	0.17	0.17
Ultimate shearing strength, psi	48,000	48,000
Yield point in shear, psi	23,000	23,000
Modulus of elasticity in shear, psi	12,500,000	12,500,000
Modulus of rupture in torsion, psi	58,000	58,000
Brinell hardness number	110–145	110–135
Charpy impact value, ft.-lb.		
Using V notch 0.394 in. square bar, 0.079 in. depth of notch†	16.5	
Using "keyhole" notch 0.04-in. radius at bottom, 0.39 in. square bar, V notch 0.197-in. depth	7.0	6.5
Izod impact value, ft.-lb. (using V notch 0.394 in. square bar, 0.079 in. depth of notch‡	16.5	
Fatigue endurance limit§	25,000–26,500	25,000–26,500
Endurance ratio (endurance limit/ultimate strength) §	0.43–0.54	0.50
Resistivity, micro-ohms per cc	30	32

---

* These chemical compositions are not to be taken as specifications, because the specifications for mechanical properties can be met by a number of compositions, depending on foundry practice and conditions.

† Fig. 1b, "A.S.T.M. Symposium on Impact Testing of Materials," 1922, p. 53; also *Proceedings* A.S.T.M., Vol. 22, Part 2, 1922, p. 87.

‡ Fig. 2b, "A.S.T.M. Symposium on Impact Testing of Materials," 1922, p. 57; also *Proceedings* A.S.T.M., Vol. 22, Part 2, 1922, p. 88.

§ The longer range of values for grade 35018 material is due, in part, to more frequent investigation.

rendered is proportionally less, the ultimate cost of the part, when service life and maintenance are considered, may be much lower for the casting that costs more initially.

TABLE V.—PROPERTIES OF PEARLITIC MALLEABLE IRON

	No. 1	No. 2	No. 3
Tensile strength, min., psi	60,000	65,000	75,000
Yield point or yield strength, min., psi	43,000	50,000	60,000
Elongation in 2 in., min., %	10	8	5

The above properties have been adopted by the Ordnance Department in their tentative specification AXS-623 (Rev. 2).

General Classification.—In general, the various cast metals may be classified as to their relative merits in service as follows: *Steel* is known for its ductility, rigidity, and impact resistance. The casting in Fig. 1 requires these properties in service. Certain types exhibit excellent corrosion resistance and resistance to heat at high temperatures and pressures. *Cast iron* possesses excellent machinability, good corrosion resistance, high compressive strength in relation to tensile strength, high vibration damping capacity, and excellent nonseizing, nongalling characteristics. Cast iron was adopted for the refrigerator crankshaft in Fig. 5 because of economy and the vibration-damping capacity of that material. ***Malleable iron*** is the most easily machinable among alloys of equal strength and has good ductility. It also is an excellent material for resisting certain types of corrosion.

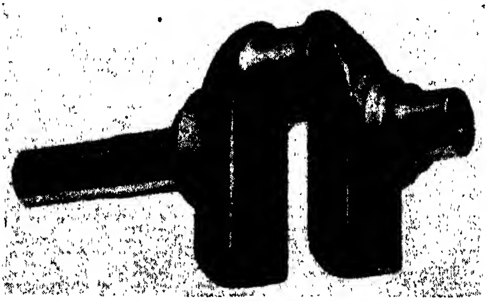

FIG. 5.—Refrigerator crankshaft. Adopted because damping capacity of cast iron resulted in quieter operation than when forged-steel crankshaft was used.

TABLE VI.—COMPOSITION AND PROPERTIES OF NONFERROUS SAND-CASTING ALLOYS

Type	Alloy No.	Composition, %																	Uses
		Cu	Zn	Sn	Pb	Fe	Si	Mg	P	Sb	Cr	Ni	Co	Be	S	Impurities	Al	Mn	
High electrical and thermal conductivity Cu alloy.		99.85 M	0.020 M	0.020 M	0.020 M	0.050 M	0.020 M	0.020 M	0.005 M	0.005 M									Electrical conductivity applications
High-Cu precipitation-hardening conductivity alloys.	1	99.72	.....	.....	.....	.....	0.08	.....	.....	.....	0.80								High thermal and electrical conductivity
	2	96.40	.....	.....	.....	.....	0.60	.....	.....	.....	...	3.00							
	3	97.00	.....	.....	.....	.....	0.60	.....	.....	.....	.....	..	2.40						
	4	97.00	.....	.....	.....	.....	.....	.....	.....	.....	.....	..	2.60	0.40					
	5	99.50	.....	.....	.....	.....	.....	.....	.....	.....	0.40	.....	.	0.10					
Valve bronzes and red brasses.	1	86.50 M	2.00–5.00	5.50–6.50	1.50–2.00	0.25 M	0.005 M	.....	0.05 M	.....	.....	1.00 M	..	.	0.05 M				Pressure castings
	2	84.00–86.00	4.00–6.00	4.00–6.00	4.00–6.00	0.25 M	0.005 M	.....	0.05 M	0.25 M		1.00 M	. .	.	0.05 M				Pressure work at temperatures not above 400°F.
	3	76.00–78.00	5.50–6.50	4.00–6.00	9.00–11.00	0.25 M	0.005 M	.....	0.05 M	0.15 M	.	1.50–2.50	..	..	0.05 M				Refrigeration metal
Semired brasses.	1	83.00	5.00–7.00	3.25–4.75	5.00–7.00	0.25 M	0.005 M	.....	0.05 M	0.25 M	....	1.00 M	.	....	0.05 M				Radiator valves, low-pressure steam fittings, low-pressure water fittings. Alloys 3 and 4 widely used for plumbing fixtures
	2	80.00	7.50–9.50	2.50–3.50	6.25–7.75	0.25 M	0.005 M	.....	0.05 M	0.25 M	.	1.00 M	.		0.05 M				
	3	77.00	9.00–10.00	2.50–3.50	9.00–11.00	0.25 M	0.005 M	.....	0.05 M	0.25 M		1.00 M			0.05 M				
	4	78.00	12.00–14.00	1.50–2.50	6.00–8.00	0.25 M	0.01 M	.....	0.03 M	0.25 M	.	1.00 M	. .		0.05 M				
Yellow brasses.	1	70.00–71.00	20.00–24.50	1.00–2.00	2.00–4.00	0.30 M	0.10 M	.....	0.01 M	0.10 M	....	0.50 M	....		0.05 M	0.50 M			Used widely in plumbing industry
	2	60.00–62.00	30.00–35.00	1.00M	1.00–3.00	0.30 M	0.10 M	.....	0.01 M	0.10 M	....	0.50 M	.		0.05 M	1.00 M	0.50 M		
Manganese bronze.	1	55–62	Rem.	0–1.5	0.4M	0.6–2.0	.....	.....	.....	.....	.....	.....	.	.	..		0.5–1.5	0.2–3.5	Propeller hubs and blades, gas-engine bases, valves, valve stems, pump bodies, hydrostatic elements, lever arms, etc., in marine service
	2	56–65	Rem.	0–1.00	0–0.2	2–5	.....	.....	.....	.....	..	0–3.00	. .	.	.	.	2–7	2–6	

TABLE VI.—COMPOSITION AND PROPERTIES OF NONFERROUS SAND-CASTING ALLOYS.—(*Continued*)

Type	Alloy No.	Properties														
		Propor. limit, psi	Tensile strength, psi	Yield point, psi	Elongation, % in 2 in.	Brinell hardness	Specific gravity	Electrical conductivity, %	Thermal conductivity	Reduction of area, %	Modulus of elasticity, psi	Weight per cu. in.-lb.	Resistance to impact, ft.-lb.	Coefficient of thermal expansion	Specific heat	Compressive stress*
High electrical and thermal conductivity Cu alloy.	..	...	25,000– 30,000	16,000– 19,000	40–50	35–42	8.8	80	0.903							
High-Cu precipitation hardening cond. alloys.	1	...	52,000	35,000	18	100	..	85								
	2	...	75,000	65,000	15	140	.	45								
	3	....	65,000	50,000	15	120	...	65								
	4	45,000	90,000	.....	10	220	..	45								
	5	15,000	30,000		15	....	..	75								
Valve bronzes and red brasses.	1	8,000	34,000– 42,000	16,000– 22,000	22–30	60–70[1]	8.6	...		23–27	12,000,000	0.314	16[10]			
	2	8,000	30,000– 38,000	14,000– 20,000	20–30	55–65[1]	...	16.4[4]	...	25–29	11,000,000	0.314	9[10]	18.4[7]		
	3	....	25,000– 30,000	12,000– 18,000	15–25	50–60[1]	8.7	.....	.	.	..	0.320				
Semired brasses	1	...	30,000– 36,000	15,000– 20,000	20–30	55–65[1]	8.6	....	..	20–30		0.314				
	2	....	30,000– 36,000	15,000– 20,000	15–25	55–65[1]	8.6	. .		15–25	....	0.314				
	3	.....	25,000– 30,000	12,000– 17,000	10–20	50–60[1]	8.7	...			...	0.320				
	4	....	30,000– 36,000	15,000– 20,000	15–25	55–65[1]	8.6	..			..	0.315				
Yellow brasses	1	..	30,000– 35,000	15,000– 20,000	25–35	50–60[2]	8.5	...	...	25–35	. .	0.310				
	2	. .	35,000– 45,000	18,000– 25,000	15–25	55–65[2]	8.5	26.4[4]	0.286[6]	20–30	15,000,000	0.300	.	0.0004204[8]	0.0909[14]	
Manganese bronze	1	. .	65,000– 75,000	35,000– 50,000	20–30	100–120	..	25–35		20–30		0.302	20–40[10]		..	12,000– 16,000
	2	....	90,000– 110,000	50,000– 70,000	10–20	180–240	.	11–14		10–20	. .	0.302	7–15[11]	.. .		60,000– 70,000

* Compressive stress for 0.001-in. deformation of a 1-in. cube, psi. For other footnotes see p. 93.

TABLE VI.—COMPOSITION AND PROPERTIES OF NONFERROUS SAND-CASTING ALLOYS.—(*Continued*)

Type	Alloy No.	Composition, %													Uses
		Cu	Zn	Sn	Pb	Fe	Si	P	Sb	Ni	S	Impurities	Al	Mn	
Nickel brasses	1	62.0–65.0	6.0–10.0	2.5–4.0	5.0–6.0	1.0M	......	0.05M	.	19.0–20.0		.	. .	1.0M	Alloys 1, 2, 3, 4, and 5 are used for plumbing, fittings, marine hardware and ornamental (white-color) work: textile, laundry, and filling, machine parts and dairy equipment; and chemical pumps and fittings. Alloy 6 is used in marine service, and alloy 7 for high-temperature corrosion-resistant work.
	2	55.0–64.0	20.0	...	.	1.00M	......	0.05M	.	18.0–20.0		. .	0.00M	. .	
	3	55.0	20.0	2.0	10.0	1.00	.....	0.05M		13.0			. . .		
	4	55.0	18.0	4.0	8.0	1.00M	. ....	0.05M	..	15.0				1.50M	
	5	56.0	15.0	4.0	1.0	...	......	0.05M	.	20.0					
	6	Rem.	1.00M	1.0M	0.05M	1.00–1.25	0.25–0.75	.. .	...	28.5–31.5	C 0.15M	.	0.05M	0.60–1.20	
	7	33.0	......	13.0	......	...	....	......	.....	54.0					
Nickel bronze		88.0	2.0	0.00–0.01	......	......	......	0.05	..	5.0					Used (as heat-treated) in worm gears and other heavy-shock services, and for bridge plates and corrosion-resisting parts.
Tin bronze	1	87.00–89.00	1.50–4.50	7.50–10.50	0–2.00	0–0.25	... ..	0–0.05	. ...	0–1.00	. ..	0–0.50			Alloy 1 is used for valves and steam fittings under 500°F., pump and piston parts for steam and vs. sea-water corrosion; low-speed, high-load bearings, and gears. Alloy 2 is used for bearings, gears, and worm wheels. Alloy 3 is used most widely for bridge bearings, and alloy 4 is a chill-cast, shock-resistant composition for worm gears.
	2	86.00–90.00	0–1.00	10.00–14.00	0–0.50	. ....	......	0–0.30	....	...	... ..	0–0.50			
	3	78.00–84.00	0–0.25	16.00–22.00	......	.....	......	0–1.0	. ...	...	.....	0–0.50			
	4	87.50	......	11.00	.....	.....	.....	0.10	..	1.50					
High lead-, tin bronze.	1	80.00–83.00	0–3.00	7.00–10.00	7.00–10.00	0.25M	0.03M	0.05M	0.50M	0.25M	0.08M				Alloy 1 is used for heavy-pressure bearings, and for wear-resistance. Alloy 2 is used for high-speed, lower-load bearings; for railroad bearings and liners; and for roll-neck bearings. Alloy 4 is used as metallic packing in engine and compressor piston rods and valve stems.
	2	73.00–78.00	0.05M	5.00–10.00	15.00–20.00	0.25M	0.03M	0.05M	1.00M	0.50M	0.08M				
	3	63.00–75.00	0.50M	0–5.00	25.00–35.00										
	4	40.00–60.00	. ...	. .	40.00–60.00										
Aluminum bronze	1	86.0M	.... .	0.5M	.	2.5–4.0							8.0–9.50		Alloy 1 and 2 (as-cast) are resistant to food acids. Used for gears; especially when mated with hardened-steel gear. Also used for steel mill stripper nuts, etc.
	2	88.25–90.5	. ....	0.2M	. .	1.25M	.	.		.		..	9.5–10.5		

TABLE VI.—COMPOSITION AND PROPERTIES OF NONFERROUS SAND-CASTING ALLOYS.—(*Continued*)

Type	Alloy No.	Properties														
		Propor. limit, psi	Tensile strength, psi	Yield point, psi	Elongation, per cent in 2 in.	Brinell hardness	Specific gravity	Electrical conductivity, per cent	Thermal conductivity	Reduction of area, per cent	Modulus of elasticity, psi	Resistance to impact, ft.-lb.	Coefficient of thermal expansion	Compressive stress*	Endurance limit, psi	Yield strength in compression, psi
Nickel brasses	1	18,000[12]	45,000	27,000	15.0	95[3]	8.7	5[4]	10[12]	20.0	15,000,000	25[11]	0.000-010[9]	. ..	5,000	12,000
	2	....	45,000	20,000	35.0	55[3]										
	3	15,000[13]	40,000	25,000	15.0	100[3]	8.7	5[4]	10[12]	20.0	12,000,000	10[11]	0.000-010[9]	......	4,000	8,000
	4	15,000[13]	40,000	25,000	15.0	100[3]	8.7	5[4]	10[12]	20.0	13,000,000	15[11]	0.000-010[9]	. ....	4,000	8,000
	5	....	55,000	40,000	10.0	140										
	6	20,000[13]	63,000	32,000	35	117[3]	8.8	5[4]	10[12]	45	20,000,000	30[11]	0.000-010[9]	.. ...	15,000	15,000
	7	20,000[13]	60,000	30,000	12	120[3]	8.7	5[4]	10[12]	18	19,000,000	30[11]	0.000-010[9]	. . .	15,000	15,000
Nickel bronze (as-cast heat-treated).		15,000[13]	47,000	22,000	45	85[3]	8.8-8.9	12[4]	....	40	17,000,000					
		35,000[13]	75,000	55,000	20	148[3]	8.8-8.9	16[4]	....	20	17,000,000					
Tin bronze	1	11,000-14,000	35,000-45,000	16,000-23,000	20-40	65-85	....	11-13	...	15-35	15,000,000	7-10[10]	. . .	13,000-17,000		
	2	....	33,000-45,000	18,000-26,000	7-15	60-80	. ..	10-11	. ..	5-13	. ... .	3 6[10]	.	16,000-22,000		
	3	....	25,000-35,000	18,000-32,000	0-1.5	70-160	. .	6.5-7.5	.	0-1.2	.. ..	0.5-1 3[10]	..	24,000-30,000		
	4	....	51,000	27,000	18	100										
High lead, tin bronze	1	8,000-10,000	29,000-35,000	15,000-21,000	8-14	55-65	....	9	..	8-14	....	4-8[10]	...	13,000-16,000		
	2	6,000-8,000	22,000-32,000	8,000-20,000	9-15	45-70	...	11	....	9-15	. . .. .	3-6[10]	.	14,000-16,000		
	3	....	7,000-23,000	4,000-11,000	3-16	30-45	....	.....	...	5-18	. .	.	.	4,000-10,000		
	4	....	6,000	....	15	28	. ..	.....	....	16						
Aluminum bronze (sand cast).	1	20,000[13]	70,000	35,000[15]	25	70[16]	7.6	.....	. .	25	18,000,000					
	2	20,000[13]	70,000	30,000[15]	20	110[16]	7.5	. .	15	20	15,000,000	30-36[10]	0.000-0091[18]	. .	2,800-4,200[17]	

* Compressive stress for 0.001-in. deformation of a 1-in. cube, psi. For other footnotes see p. 93.

TABLE VI.—COMPOSITION AND PROPERTIES OF NONFERROUS SAND-CASTING ALLOYS.—(*Continued*)

Type	Alloy No.	Composition, %										Uses
		Cu	Zn	Fe	Si	Mg	P	Ni	Al	Mn	Ti	
Cu-Si alloys......	1 2 3 4	94.9 94.4 94.75 97.12	.... 1.0	...... 1.5	4.0 4.0 4.25 2.88	....	 0.05	....	.. ...	1.1 0.05		Used extensively in sewage disposal equipment, marine hardware, chemical process equipment, pipe fittings, valves and pumps for handling corrosive liquids, electrical conduit fittings, and transmission-line conductors.
Nonheat-treated Al-Cu alloys (sand cast).	1 2 3 4	7.0–8.5 7.0–8.5 6.0–8.0 11.0–13.5	0.2M 0.2M 2.2M 0.2M	1.2M 0.8–1.4 1.5M 1.2M	0.5M 1.0–1.5 1.0–3.0 1.0M	0.05M 0.05M 0.05M 0.05M	....	....	Rem. Rem. Rem. Rem.	0.3M 0.3M 0.3M 0.3M		Used for castings for the automotive industry where lightweight and mechanical properties are quite satisfactory for such parts as crankcases, oil pans, transmission housings, manifolds and miscellaneous chassis, body and engine fittings, plus parts for vacuum sweepers, washing machines, typewriters, and other appliances and equipment not subject to extreme stresses and impact.
Heat-treated Al-Cu alloys (sand cast).	1	4.0–5.0	0.05M	1.0M	1.2M	0.03M	..	0.05M	Rem.	0.05M	0.2M	Alloy 1 used extensively as a general engineering material for such parts as crankcases for truck, motor coach, aircraft engines, outboard-motor castings, marine and aircraft fittings, and numerous other parts where high strength, ductility, and impact resistance, together with light weight, are required. Alloys 2 and 3 are used extensively for pistons, bearings, and other parts requiring hardness wear resistance and the ability to retain strength well at temperatures of 500–600°F.
	2	3.5–4.5	0.1M	1.0M	0.7M	1.2–1.8	...	1.7–2.3	Rem.	0.3M		
	3	9.2–10.8	0.2M	1.5M	....	0.15–0.35	..	...	Rem.	0.3M		
Nonheat-treated Al-Si alloys (sand cast).	1	0.4M	0.2M	0.8M	4.5–6.0	0.05M	..	...	Rem.	0.3M	0.2M	For use in marine castings, such as water-cooled manifolds and water jackets, nonstructural aircraft parts, automotive and bus fittings, small motor housings, meter cases, cooking utensils.
	2	0.15M	0.1M	0.8M	12.0–13.0	0.05M	...	......	Rem.	0.2M		
Heat-treatable Al-Si alloys (sand cast).	1	1.0–1.5	0.05M	0.05M	4.5–5.5	0.4–0.6	....	....	Rem.	0.1M	0.2M	Used for leakproof castings, such as water-cooled cylinder heads for aircraft, automotive, and Diesel engines, water jackets, large and intricate crankcases, cylinder blocks, oil pans. Alloy 2 is suited for marine and Diesel-engine crankcases, cylinder blocks and oil pans, marine fittings, intricate thin sections, and castings and where maximum impact and corrosion resistance are desired.
	2	0.2M	0.05M	0.05M	6.5–7.5	0.2–0.4	...	......	Rem.	0.05M	0.2M	
	3	1.2–1.8	.....	0.6M	4.5–5.5	0.4–0.6	...	0.5–1.0	Rem.	0.5–1.0		
Al-Cu-Si alloy (sand cast).		3.5–4.5	0.5M	1.0M	2.5–3.5	0.1M	..	...	Rem.	0.3M		For castings that might prove difficult in Al-Cu alloys and where mechanical properties somewhat in excess of those of Al-Si alloys are required.
Al-Mg alloy (sand cast).		0.1M	0.05M	0.4M	0.3M	3.2–4.3		.	Rem.	0.6M	0.2M	Used for dairy equipment, pipe fittings, carburetor cases, sewage disposal equipment, small ornamental castings, and kitchen utensils.

TABLE VI.—COMPOSITION AND PROPERTIES OF NONFERROUS SAND-CASTING ALLOYS.—(*Continued*)

Type	Alloy No.		Properties												
			Tensile strength, psi	Yield point, psi	Elongation, per cent in 2 in.	Brinell hardness	Specific gravity	Electrical conductivity, per cent	Thermal conductivity	Modulus of elasticity, psi	Coefficient of thermal expansion	Endurance limit, psi	Yield strength in compression, psi	Shearing strength, psi	Density, lb. per cu. in.
Cu-Si alloys............	1		48,000–58,000	18,000–25,000[20]	20–50	80–100[1]	8.23	5.6[4]	7.2[21]		0.000– 0.000–				
	2		48,000–58,000	18,000–25,000[20]	20–50	80–100[1]	8.44	5.6[4]	7.2[21]	.	0.000– 018[8]				
	3		48,000–58,000	18,000–25,000[20]	20–50	80–100[1]	8.37	5.6[4]	7.2[21]	.	0.000– 018[8]				
	4		40,000–50,000	......	30–40	......	....	6.5[4]	9.0[21]						
Nonheat-treated Al-Cu alloys (sand cast).	1		22,000	14,000	2.0	65[1]	2.83	37[4]	0.34[23]	10.3[22]	22.5[24]	8,000	14,000	20,000	0.102
	2		22,000	14,000	2.0	65[1]	2.83	32[4]	0.30[23]	10.3[22]	22[24]	8,000	14,000	20,000	0.102
	3		23,000	14,000	1.5	70[1]	2.85	30[4]	0.28[23]	10.3[22]	22[24]	9,000	17,000	20,000	0.103
	4		24,000	18,000	1.5	75[1]	2.92	36[4]	0.33[23]	10.3[22]	22[24]	10,000	20,000	20,000	0.105
Heat-treated Al-Cu alloys (sand cast).	1	H.T. 1	31,000	16,000	8.5	65[1]	2.77	35[4]	0.33[23]	10.3[22]	23[24]	6,000	16,000	24,000	0.100
		H.T. 2	36,000	22,000	5.0	80[1]	2.77	36[4]	0.33[23]	10.3[22]	23[24]	6,500	25,000	30,000	0.100
		H.T. 3	40,000	31,000	2.0	95[1]	2.77	37[4]	0.34[23]	10.3[22]	23[24]	7,000	38,000	31,000	0.100
	2	H.T. 1	32,000	28,000	0.5	85[1]	2.73	36[4]	0.33[23]	10.3[22]	22.5[24]	8,000	34,000	27,000	0.099
		H.T. 2	37,000	32,000	0.5	100[1]	2.73	37[4]	0.35[23]	10.3[22]	22.5[24]	8,000	47,000	32,000	0.099
	3	H.T. 1	25,000	20,000	1.0	75[1]	2.85	41[4]	0.38[23]	10.3[22]	22[24]	9,500	20,000	21,000	0.103
		H.T. 2	36,000	30,000	1.0	100[1]	2.85	33[4]	0.31[23]	10.3[22]	22[24]		43,000	29,500	0.103
Nonheat-treated Al-Si alloys (sand cast).	1		19,000	9,000	8.0	40[1]	2.66	37[4]	0.34[23]	10.3[22]	22[24]	6,500	12,000	14,000	0.096
	2		26,000	11,000	8.0	50[1]	2.65	40[4]	0.37[23]	10.3[22]	20[24]	6,000	11,000	18,000	0.095
Heat-treatable Al-Si alloys (sand cast).	1	H.T. 1	30,000	20,000	5.0	60[1]	2.67	35[4]	0.33[23]	10.3[22]	22[24]	.....	23,000	28,000	0.097
		H.T. 2	35,000	25,000	3.5	80[1]	2.67	36[4]	0.33[23]	10.3[22]	22[24]	7,000	29,000	30,000	0.097
		H.T. 3	28,000	23,000	1.5	60[1]	2.67	43[4]	0.40[23]	10.3[22]	22[24]	7,000	24,000	22,000	0.097
	2	H.T. 1	28,000	16,000	6.0	55[1]	2.63	39[4]	0.36[23]	10.3[22]	21.5[24]	....	18,000	22,000	0.095
		H.T. 2	32,000	22,000	4.0	70[1]	2.63	39[4]	0.36[23]	10.3[22]	21.5[24]	8,000	22,000	27,000	0.095
	3	H.T. 1	28,000	24,000	1.5	65[1]	2.71	32[4]	0.31[23]	10.3[22]	21.5[24]	8,000	24,000	22,000	0.098
		H.T. 2	35,000	21,000	2.0	60[1]	2.71	32[4]	0.31[23]	10.3[22]	21.5[24]	8,000	21,000	21,000	0.098
Al-Cu-Si alloy (sand cast)			21,000	14,000	2.0	55[1]	2.76	31[4]	0.29[23]	10.3[22]	22[24]	8,500	14,000	20,000	0.099
Al-Mg alloy (sand cast)..			25,000	12,000	9.0	50[1]	2.64	35[4]	0.32[23]	10.3[22]	24[24]	5,500	12,000	20,000	0.095

* For footnotes see p. 93.

TABLE VI.—COMPOSITION AND PROPERTIES OF NONFERROUS SAND-CASTING ALLOYS.—(*Continued*)

Type	Alloy No.	Composition, %																Uses
		Cu	Zn	Sn	Pb	Fe	Si	Mg	Sb	Ni	S	Al	Mn	As	Bi	Cd	C	
Mg-base alloys (sand cast).	1	0.05 M	0.3 M	...	...	...	0.5 M	Rem.	...	...	...	9.0– 11.0	0.10 M					Used mainly in transportation industry, in construction of parts for portable tools, in construction of reciprocating parts of automatic equipment, where weight saving is important, airplane crankcases, starting equipment, instrument housings, supercharger parts, landing and tail wheels, etc.
	2	0.05 M	0.3 M	...	...	...	0.5 M	Rem.	...	...	...	11.2– 12.8	0.10 M					
	3	0.05 M	2.5– 3.5	...	...	...	0.5 M	Rem.	...	...	...	5.3– 6.7	0.15 M					
	4	0.05 M	0.5– 1.5	...	...	...	0.5 M	Rem.	...	...	...	9.0– 11.0	0.10 M					
Pb-Sb alloys.	1	0.50 M	...	...	90.00	...	...	...	9.00– 11.00	...	...	...	...	0.25 M				Used essentially where loads and speeds are not excessive and where price is a consideration. Have an unlimited number of uses where the requirements for strength and resistance to impact are quite low. Bearings lined with alloys 4, 5, and 6, having bronze or steel backs, are being used under more severe conditions and in some instances are competing with tin-base alloys. Railroads are among the largest users of lead-base bearing metals.
	2	0.50 M	...	...	85.00	...	...	...	14.00– 16.00	...	...	...	...	0 25 M				
	3	1.25– 1.75	...	19.00– 21.00	63.50	0.08 M	...	...	14.00– 16.00	...	...	...	...	0 15 M				
Pb-Sn-Sb alloys.	4	0.50 M	...	9.00– 11.00	75.00	...	...	...	14.00– 16 00	...	...	...	...	0 20 M				
	5	0.50	...	4.50– 5.50	80.00	...	...	...	14 00– 16.00	...	...	...	...	0 20 M				
	6	0.50	...	4.50– 5.50	85.00	...	...	...	9.00– 11.00	...	...	...	...	0.20 M				
Sn-base bearing alloys.	1	4.00– 5.00	...	90.00– 91.00	0.25 M	...	...	...	4.00– 5.00	...	...	...	...	0.10 M	0 08 M	0.05 M		Used principally for automotive connecting-rod and main bearings, electric-motor-generator bearings, and wherever rather severe service conditions are encountered.
	2	3.00– 4.00	...	88.00– 89.00	0.25 M	0.08 M	...	...	7 00– 8.00	...	...	...	...	0 10 M	0 08 M	0.05 M		
	3	1.50– 2.50	...	89.00– 90.00	0.25 M	0.08 M	...	...	7.50– 8 50	...	...	...	...	0.10 M	0 08 M	0.05 M		
	4	5.00– 6.50	...	86.00– 87.50	0 25 M	0.08 M	...	...	6 00– 7 50	...	...	...	...	0.10 M	0 08 M	0.05 M		
	5	6.50– 8.50	...	83.50– 85.00	0.25 M	0.08 M	...	...	6 50– 8.50	...	...	...	...	0.10 M	0 08 M	0.05 M		
High-nickel alloys.	1	...	...	...	...	1.0– 1.50	0.50– 1.50	...	...	97 0	0 03 M	...	...	...	...	...	0 15– 0.25	Alloy 1 is used for all castings for food handling and process work where contamination with metals other than nickel would be injurious. Alloy 2 (Monel) is used for corrosion-resistant castings of all sorts, and for valves and valve-trim handling steam and for chemical-process work. Alloys 3 and 4 are used for valve parts where better frictional properties are desired.
	2	29	...	...	...	1.50– 2.50	0.50– 1.50	...	...	67	0 03 M	...	0.50– 1.00	...	...	...	0.15– 0.20	
	3	29–33	...	...	...	2.00 M	3.75	...	...	62–63	0.03 M	...	...	...	...	...	0 15– 0.20	
	4	28–30	...	...	...	1.50– 1 75	2.50– 3 00	...	...	64–67	0 03 M	...	0.50– 0.75	...	...	...	0.15– 0.25	

TABLE VI.—COMPOSITION AND PROPERTIES OF NONFERROUS SAND-CASTING ALLOYS.—(*Continued*)

Type	Alloy No.		Properties															
			Proportionate limit, psi	Tensile strength, psi	Yield point, psi	Elongation, per cent in 2 in.	Brinell hardness	Specific gravity	Electrical conductivity, per cent	Thermal conductivity	Reduction of area, per cent	Modulus of elasticity, psi	Resistance to impact, ft.-lb.	Coefficient thermal conductivity	Compressive stress†	Solidification point, °F.	Complete liquefaction point, °F.	Casting temperature, °F.
Mg-base alloys (sand cast).	1	H.T.	......	13,000	12,000	8	52	1.81										
		H.T.A.	......	34,000	19,000	2	69											
	2	H.T.A.	....	29,000	22,000	0.5	78	1.81										
	3	S.C.	......	27,000	12,000	5	50	1.83										
		H.T.	......	38,000	12,000	11	51											
		H.T.A.	......	38,000	19,000	5	62											
	4	H.T.A.	......	36,000	22,000	1	77	1.82										
Pb-Sb alloys....	1		......	7,670	....	15	15^{1}	....	....	....		....	....	....	....	476	498	650–800
	2		......	6,800	....	8	15.2^{1}	....	....		....	....	....	....	....	476	504	650–800
	3		......	10,000	....	0.50	26^{1}	....	....				....			363	531	650–800
Pb-Sn-Sb alloys..	4		......	10,500	......	1	26^{1}	....	....	....		....	....	....	....	462	516	650–800
	5		......	10,250	......	4	20^{1}	....	....	....	....	....	....	....	....	462	498	650–800
	6		......	10,000	......	4.5	18.20^{1}	....	....	....	....		....	....	....	462	483	650–800
Sn-base bearing alloys.	1	70°F.	......	9,500	.....	10.0	20^{1}	....	....		....	....	....	....	....	433	690	700–800
		212°F.	......	6,000	.....	17.5	11^{1}	....	....		....	....	....	....	....			
	2	70°F.	......	10,500	......	11	24^{1}	....	....		....	....	....	....	....	465	650	675–775
		212°F.	......	6,500	....	18	13^{1}	....	....		....	....	....		....			
	3	70°F.	......	10,500	....	15	26^{1}	....	....	....	....		....	....	....	465	560	650–750
		212°F.	......	6,600		20	13^{1}	....	....	....	....	....	....		....			
	4	70°F.	......	11,000	....	7	25^{1}	....	....	....	....	....	......		....	465	730	750–850
		212°F.	......	6,500	....	12	14^{1}	....	....		....		....		....			
	5	70°F.	......	11,700	......	4.6	29.01^{1}	....	....	....	....	....	......	....	....	465	800	825–900
		212°F.	......	6,800	......	10.5	16.0^{1}	....	....	....	....	......	......	......				
High-Ni alloys..	1		18,000^{13}	70,000	30,000	30	120^{16}	8.75	16^{4}	34^{12}	35	30	70–80^{11}	0.000–008^{26}	18,000^{25}			
	2		22,000^{13}	70,000	35,000	35	140^{16}	8.70	4^{4}	10^{12}	35	26	70–80^{11}	0.000–008^{26}	22,000^{25}			
	3		70,000^{13}	100,000	80,000	2	300^{16}	8.65	4^{4}	10^{12}	1	26	4–10^{11}	0.000–008^{26}	70,000^{25}			
	4		30,000^{13}	80,000	50,000	15	190^{16}	8.70	4^{4}	10^{12}	25	26	40–50^{11}	0.000–008^{26}	30,000^{25}			

* H.T. = heat-treated (solution): H.T.A. = heat-treated and aged; S.C. = sand cast. † Compressive stress for 0.001-in. deformation of a 1-in. cube, psi.

[1] 10-mm. ball, 500-kg. load.

[2] 10-mm. ball, 50-kg. load.

[3] 10-mm. ball, 1,000-kg. load.

[4] Per cent annealed copper at 20°C.

[5] Cal./(sec.) (sq. cm.) (°C.).

[6] Cal./(sec.) (sq. cm.) (°C.) at 20°C.

[7] 20 to 900°C. × 10^{6}.

[8] 25 to 300°C. per °C.

[9] 70 to 212°F.

[10] Izod.

[11] Charpy.

[12] B.t.u./(sq. ft.) (°F.) (hr.).

[13] In tension.

[14] At 18°C.-Cal.

[15] At ½% elongation under load.

[16] 10-mm. ball, 3,000-kg. load.

[17] Landgraf Turner.

[18] Per °F. (70–200°F.).

[19] Per °F. (70–600°F.).

[20] At 0.5% extension.

[21] Per cent of copper standard.

[22] Times 10^{-6}.

[23] At 25°C. cal./(cm.^{2}) (cm.-sec.) (°C.).

[24] Per °C. (20–100 °C. × 10^{6}).

[25] At 0.01% offset.

[26] 70 to 850°F. per °F.

M = maximum.

m = minimum.

FIG. 6.—Malleable-iron casting that has been intentionally twisted to illustrate the ductility of that material.

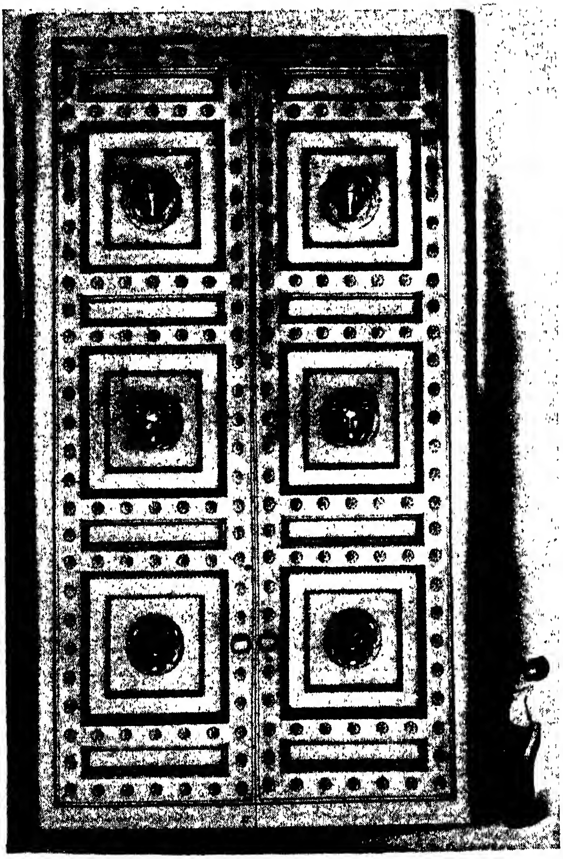

FIG. 7.—Front view of large bronze door for Parthenon at Nashville, Tenn. Many parts, including the panels, are cast in bronze.

Figure 6 indicates the ductility of malleable iron. *Brass and bronze* are primarily corrosion-resistant alloys, are made in various colors for architectural and color-matching purposes, are well suited for plating (although other alloys also are), and include excellent bearing alloys. Some of the bronzes, such as the aluminum and manganese bronzes, approach steel in strength. They also are, in the main, easily machinable. Figure 7 shows a large bronze door, the panels for which are bronze castings. This door is one in the Parthenon in Nashville, Tenn.

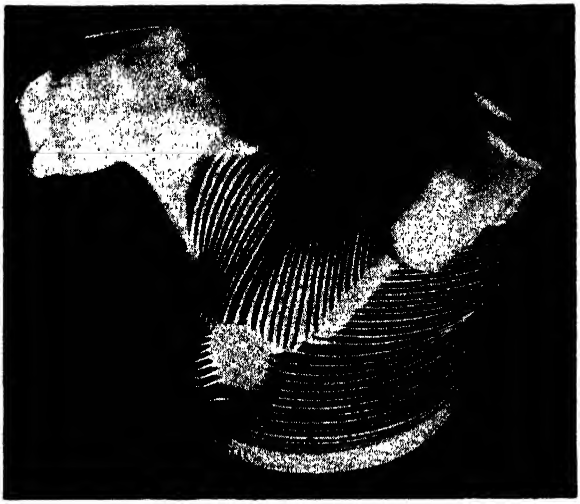

FIG. 8.—Aluminum cylinder-head casting with thin cooling fins. (*Courtesy of Aluminum Company of America.*)

Aluminum and magnesium are the bases for "light alloys." They are used primarily in applications where light weight is desirable or necessary. Aluminum castings possess good corrosion resistance under ordinary atmospheric exposures. Aluminum is also resistant to many chemicals. Aluminum alloys machine readily and certain of them take and hold a high polish without plating. A variety of colored finishes are produced thereon by chemical treatment. Magnesium alloys are one-third lighter in weight than aluminum alloys and are very easy to machine but, in general, are low in corrosion resistance unless given a chemical treatment. Figure 8 shows an aluminum cylinder head with thin fins. Figure 9 shows a magnesium aircraft landing wheel being checked for accuracy.

Choice of Foundry.—The first step in the production of any casting should be a sketch or drawing showing the general shape and approximate dimensions of the piece. Before the design takes its final form, however, the designer or engineer should consult a qualified foundryman, for the casting of metals is not an elementary process, as many may imagine. In common with other manufacturing methods, it has its complications. Much time and often much expense can be saved if the designer will heed the reasonable advice that foundrymen qualified by long experience in casting production can give.

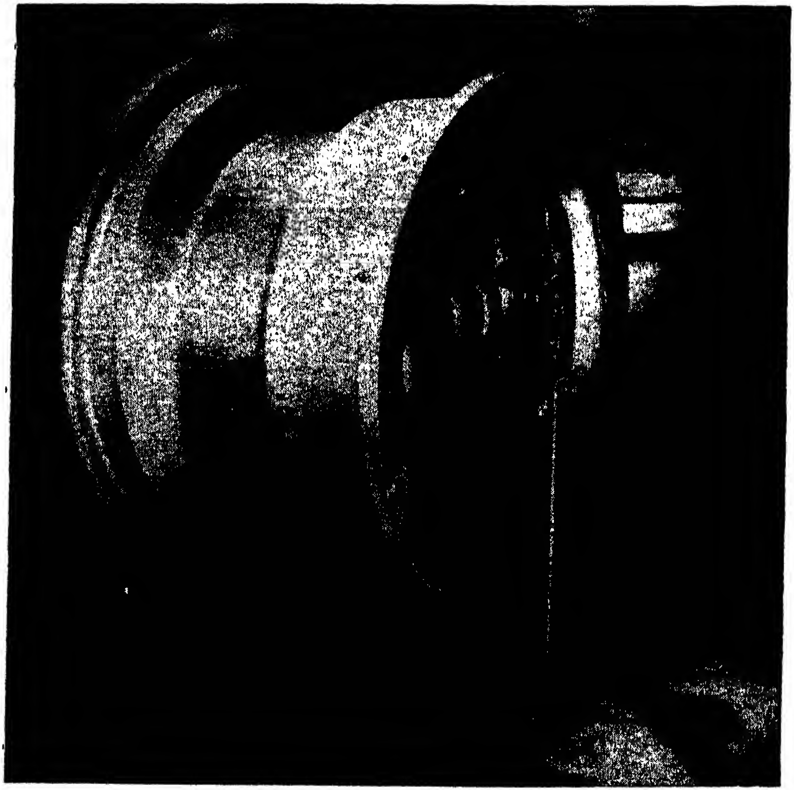

FIG. 9.—Checking a magnesium aircraft-landing-wheel casting for accuracy. (*Courtesy of Dow Chemical Company.*)

Selection of the producer should be given serious consideration. A choice should not be based on price alone. Items to be weighed should include assurances that the foundry has the proper equipment, sufficient capacity, skilled workmen, capable personnel to exercise the necessary control over the various operations, materials and processes to ensure the grade of product required, and a record of performance such as to justify the expectation that satisfactory castings will result. Choice of the foundry may have little to do with design, but a good choice is likely to result in securing good castings or even the best castings possible from the design under consideration.

Pattern Considerations.—When a foundry has been selected and a design worked out, the foundryman or his engineers should be called into consultation before the pattern is made, as the type of pattern and size of the piece are important items, which influence the final cost of the product. At this conference, there should be discussed such items as (1) metal shrinkage; (2) method of molding; (3) location of parting line; (4) provision for gates (openings in the mold into which the metal is poured and introduced into the mold cavity); (5) location of risers (reservoirs of molten metal to compensate for decrease in volume as the metal solidifies), if any be needed; (6) number of castings to be produced in each mold; (7) feasibility of using match plates; (8) accessibility for cleaning surfaces; (9) location of machined surfaces; (10) dimensional limits that can be held; and many more items that contribute toward making the casting the best and most economical possible from a production standpoint. Many of these items have a pronounced influence upon cost and, as designing for quantity production is usually predicated upon lowest cost consistent with securing satisfactory castings, all factors affecting cost demand adequate consideration.

In designing for quantity production by the sand-casting process, the types of patterns that can be used are somewhat limited. If the order runs into the thousands for small castings and hundreds for large or medium sizes, to be made by machine molding, wood patterns are definitely out even though they may be made of hard wood. For large quantities of small castings, metal match plates are recommended. For large quantities of medium and heavy castings, metal cope and drag patterns are recommended. Wood is not advocated because, when such patterns are in constant use, the sand abrades the pattern surfaces and produces inaccuracies in the casting at a faster rate than if metal patterns are used. Also, the water in the sand is inclined to cause the pattern to warp, thus producing inaccuracies.

A pattern is a tool for the foundryman and is merely a means to an end. As with other tools, the more accurate and sturdy the pattern equipment, the better are the results obtained.

Shrinkage.—All cast metals[1] shrink when changing from the liquid to the solid state (liquid shrinkage) and in cooling from the solidification temperature to room temperature (solid shrinkage or contraction). Therefore, in pattern construction, allowance must be made for solid shrinkage or contraction by an amount added to the dimensions given in the casting drawing when producing the pattern. Shrinkage allowances on patterns vary with the metal in the casting and with the relation of one section to another in the same casting. For example, on a particular gray-iron cylinder-block casting, the shrinkage is $\frac{1}{10}$ in. on the length, none on the height, and $\frac{1}{6}$ in. on the width. Engineers do well to be guided on shrinkage allowances by the advice of the foundryman and patternmaker. There are no fixed rules governing shrinkage, even with a given alloy, but the designer of the casting need consider shrinkage, as a rule, only as it affects the tolerances required on given dimensions, and this is a matter to be agreed upon in conference with the caster.

Risers.—As all cast metals shrink in volume as they solidify, it is necessary to compensate in some way for this phenomenon. Risers, which hold reservoirs of molten metal, are used for this purpose. Such risers must be placed so that heavy sections and hot spots may be fed properly. Hot spots occur where, because some sections are thicker than others, solidification proceeds more slowly than in other, thinner, sections. Such hot spots are likely to contain shrinkage defects if not fed properly. Hot spots can be avoided if sections are uniform in thickness throughout the casting.

It is necessary that the casting should be designed, and the pattern so constructed, that the heavy sections and hot spots can be placed in the mold where they can be fed until the metal solidifies completely. Figure 10 illustrates the right and wrong

---

[1] Except certain bismuth alloys, not commonly sand-cast.—Editor.

methods of designing to allow for shrinkage compensation. By designing the castings with sections as nearly uniform in thickness as possible, the need for risers is reduced to a minimum and the cost of the ultimate casting will be less than if the sections of the casting vary in thickness over a wide range. Designers should remember that the fewer the risers necessary for a given design, the lower the cost of the casting.

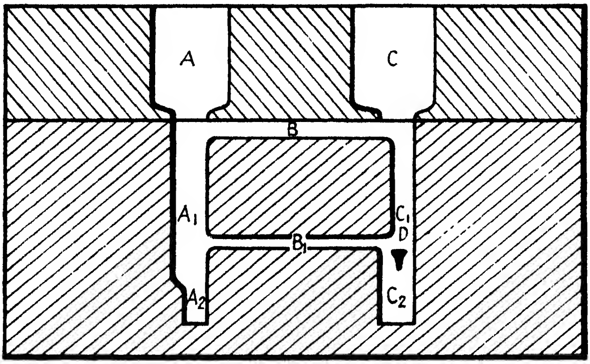

Fig. 10.—How location of sections in relation to others influences the manner of solidification. The casting includes sections A_1A_2, BB_1, and C_1C_2, risers by A and C. In cooling, A_2 is fed by the heavier section A_1, which, in turn, receives metal from riser A. Sections B and B_1, because of their lightness, cool almost instantaneously and require little feeding. Because heavy section C_2 is below the lighter section C_1, it has its supply of liquid metal shut off by the quicker freezing of section C_1. The provision of excess metal in riser C is ineffective because C_1 is lighter than C_2 and solidifies before the latter. This results in a defect at D. The remedy is to increase section C_1 to such a thickness that it will be as heavy or heavier than section C_2.

Increased cost of casting with increase in number of risers results from additional cost for removal of risers, additional molding time, additional pattern cost, and decreased yield of metal as a casting compared with total liquid metal poured into a mold.

Gating.—In production of patterns, the means whereby molten metal is introduced into the mold (the gate) should usually be included and permanently attached to the pattern, except in very large production castings not producible on molding machines. The location of gates, as well as of risers, should be the subject of a conference between the engineer, the foundryman, and the patternmaker. In instances where a foundryman of known competence is to make the castings, the gating should be left to him, as he will have the greatest amount of special knowledge and experience with regard to both gating and risers. No rules for location of gates can be given because of the wide variety of sizes and shapes of castings made. Each design must be considered separately.

Parting.—In general, patterns with straight parting lines, that is, with parting in one plane, are more economical to produce than those with irregular partings. This is because special flask equipment and setups on machines are necessary to accommodate patterns or match plates with irregular partings. Therefore, a casting should be designed so that the pattern will have its parting in one plane, if this is at all possible. This is especially desirable for match-plate machine molding. With large castings, weighing several tons, which cannot be made by machine molding, straight parting lines are desirable but to a slightly less degree than in machine molding.

Distortion Allowances.—In certain types of castings, such as those having large flat areas or those of U shape, it often is necessary purposely to distort the pattern to secure a straight casting. The amount of distortion of the pattern in such instances is called "distortion allowance" (also referred to as "faking the pattern"). It is well for the engineer to be guided in the application of such allowances by the advice of the foundryman and patternmaker, as there are no fixed rules governing such allowances.

Machine Finish Allowance.—When portions of castings are to be machined, patterns are constructed so that excess metal is provided for that purpose on the sections to be so treated. This allowance, commonly called "finish," depends on (1) kind of metal used, (2) shape of the part, (3) size of the part, (4) tendency to warp, and (5) machining method or setup.

Wherever possible, the casting should be designed in such a manner that surfaces to be machined can be cast in the drag section of the mold. When there is no way to avoid casting such surfaces in the cope, an extra allowance for finish should be made. Allowances for finish are not covered by fixed rules because they involve many variables. The matter is one to be agreed upon in conference with the foundryman.

Draft.—Draft is the taper that must be allowed on all vertical surfaces of a pattern, disposed approximately parallel to the direction in which the pattern is drawn, to permit withdrawal of the pattern from the sand without tearing the mold. Figure 11 illustrates the result of withdrawing a pattern from the mold

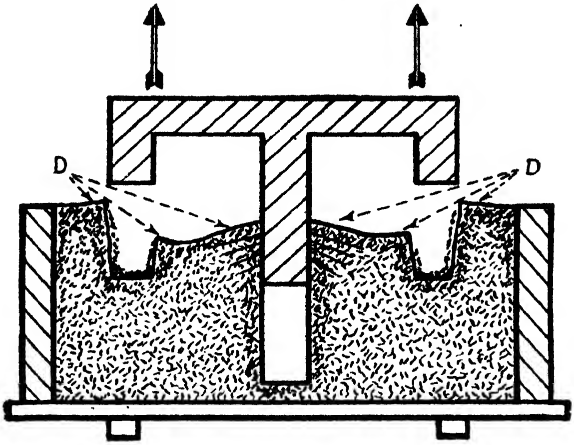

FIG. 11.—Poor stripping from the mold results when using this pattern because no allowance is made for draft.

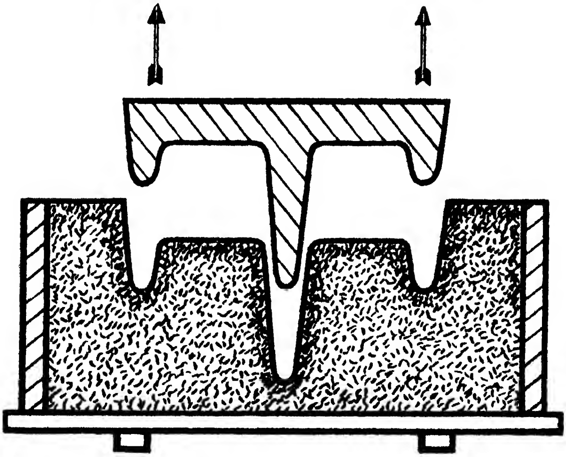

FIG. 12.—This pattern has ample draft; hence it strips easily from the mold.

when no draft was allowed on the pattern. Figure 12 illustrates how the mold retains its shape upon withdrawal of a well-drafted pattern. Regardless of the type of pattern equipment to be used, draft must be considered in all casting designs. In cases where draft may affect the subsequent use of the casting, the drawing should specify whether the draft is to be added to or subtracted from the dimensions given. Normally, draft is added to the design dimensions.

Machine or high-production (match-plate) patterns require less draft than patterns of other types. In green sand molding, interior surfaces of all types of patterns usually require more draft than exterior surfaces. The amount of draft usually required on high-production match-plate work is about 2 deg. With experience, however, it is possible in some instances to reduce the draft to 1 deg. It is a good rule to allow as much draft as possible, even exceeding the 2 deg. noted, providing it does not affect the section size variation too much or impair the usefulness of the casting. Ample draft promotes easy withdrawal of pattern from the mold, reduces mold patching, and hence decreases molding time, a distinct economy.

Core Prints.—Cores are masses of sand placed in molds to create cavities or recesses at desired locations in castings. When dry sand cores are required in a casting, provision must be made in the pattern for prints to provide anchorages or supporting recesses in the mold. In addition, core boxes must be constructed for making the cores, and, in many instances, core driers also must be provided. Figure 13 shows a core box and a core drier for an automotive-engine-manifold core. Core driers are metal supports, usually made of a light metal, such as aluminum, in which the unbaked cores are mounted during the baking operation to prevent the core from sagging and warping.

In general, the length of a core print should equal its diameter or width. When a core has prints in the cope of the mold, such prints should be larger and provide a closing clearance to avoid crushing the cope while closing the mold. It is also desirable for vertical core-print surfaces to have at least a 2-deg. taper to facilitate setting the core.

Core Boxes and Driers.—If cores are of such a shape that they may be set upside down or wrong end to, locating or indexing lugs to ensure proper setting should be provided on the pattern, in the core box, and in the core drier. The same draft should be allowed in core boxes as in patterns, namely, about 2 deg.

When the venting of cores can be determined in advance, it is desirable to discuss this subject with the foundryman and have vents indicated on the core prints by means of strips or projections and in the core boxes by some appropriate means.

Locating Points.—When possible, locating points to be used by the machine shop should be indicated on the drawing so that castings and patterns always may be checked satisfactorily from

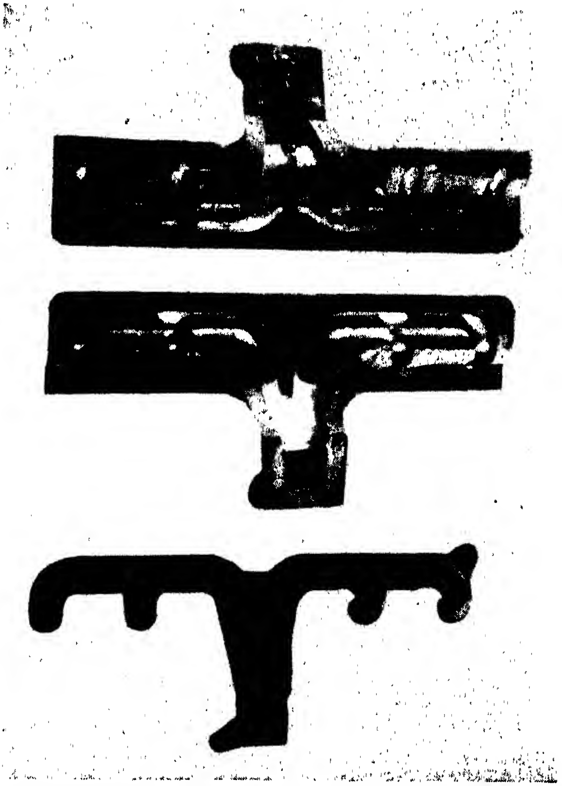

FIG. 13.—Core box used for producing automotive manifold cores. The lowest view shows the core resting in a form called a "drier," which prevents the core from warping while it is being dried.

the same point of origin by the pattern shop, foundry, and machine shop. An effort should be made to place all locating points on the same side of the parting line. In other words, locating points should be so placed that they will not be influenced by a shift of a core, the cope, or the drag. The points should be as far apart as the size of the casting permits, as this ensures the most accurate results. Points on the casting having no finish allowance and requiring to be held to close limits should be chosen for locating points when designing fixtures.

Jig spots are important items frequently neglected until the casting is made, with the possibility of considerable subsequent loss. It is important that chucks or jigs, particularly when machining malleable iron castings for production, be constructed with three universal jaws or three or more independent jaws. In the latter case, the casting should be mounted in an independent fixture and centered in the chuck by it to be sure that, when the jaws are closed, the casting will be properly centered.

Casting-design Recommendations. *Metallurgical Considerations.*—Casting design must include consideration of the metallurgical features involved because they influence greatly the recommendations here made. In any casting, however, regardless of the metal from which it is made, the design should be such that the metal in the mold will solidify progressively from the lowest to the highest portion of the casting as it sets in the mold. This is a paramount consideration in the design of any casting and one which influences practically all rules of design.

From the foundryman's viewpoint, the ideally designed casting is one of such shape and thickness that the casting can be:

1. Poured easily in all its parts.
2. Cast without the use of risers or with not more than one riser (depending on the metal), located at the casting's highest point in the mold.
3. Made to solidify regularly and progressively from the lowest to the highest point in the casting.
4. Poured in such a manner that the last fluid metal will be in the riser.
5. Cleaned with minimum difficulty.

The solidification of any cast metal, neglecting mold influences, is dependent primarily on three factors; namely, (1) pouring temperature, (2) solidification time (section size), and (3) solidification range of the metal involved.

The designer has no control over the pouring temperature. That is the province of the foundryman. Likewise, he has no control over the solidification range of the metal used, which is inherent in the metal. He does have control, however, of the solidification time, as this is dependent, in general, on the thickness of the sections of the casting.

In any casting, the thin sections freeze first and draw metal to compensate for their liquid shrinkage from the still-liquid metal in heavier sections. If these heavier sections are not so placed that they can be fed adequately by risers, they will contain defects. Furthermore, if these heavy sections are not so placed in the mold that they solidify progressively from the lowest to the highest portions, defects also will be present, hence the necessity for considering how the casting can be molded to secure progressive directional solidification when it is being designed. This may be accomplished by tapering the section, making it slightly wedge shaped from bottom to top as it sets in the mold, as by accentuating draft in horizontal and vertical sections.

Visualizing the Casting in the Mold.—Since the cost of a casting is greatly affected by the cost of making the mold, it follows that anything the casting designer can do to lower mold cost will reduce the cost per casting. For this reason, if the designer tries to visualize the casting and the pattern in the mold and studies those factors which influence molding cost, including the removal of the pattern from the mold, the setting of the cores, and other supplementary operations, he has a much better chance to lower the cost of the casting than if he disregards such matters. It is of even greater importance to visualize how the metal will enter the mold, how various portions will be fed, and how solidification will proceed. The foundryman has to consider such matters, and, if he is permitted to do so in conference or cooperation with the designer, the probability of achieving low costs and satisfactory castings is greatly increased.

Visualization can be aided by the use of a model made to scale or full size or in the form of a pattern that can be used later in making the production pattern for the job. In some cases, such a model may be quite expensive but, if it results in securing castings that cost less and perform their function better, as it is likely to do, it may result in a large net saving, especially when the number of castings required is large. A model can also help the designer see how cores can be designed and placed, where gates and risers must come, how the casting must be placed and the pattern constructed to clear the mold and secure sound castings, and how the casting will look when completed. The latter is of special importance from an appearance standpoint, as it enables the designer to see how the casting will look from every angle.

Rules for Design.—In general, castings are complicated structures containing several members. Recognizing this fact, and after considerable experimentation, the United States Navy has recommended seven design rules for steel castings, which seem applicable to castings quite generally:

1. An attempt should be made to design all sections in a casting with a uniform thickness.
2. It is not desirable to design structures with abrupt changes in section.
3. Sharp corners at adjoining sections should be eliminated if possible.
4. When the design of a cast-steel structure becomes very complicated or intricate, it is suggested that it be broken up into parts so that they may be cast separately and then assembled by welding or bolting.
5. In designing unfed sections in L or V shapes, it is suggested that all sharp corners at the junction be replaced by radii so that this section becomes slightly smaller than that of the arms.
6. In designing sections that join in an X section, it is suggested that two of the arms be offset considerably.
7. In designing any joining sections, it is suggested that all sharp corners at the junctions be replaced by radii. In the case of unfed T and X sections, these radii should not be large.

The first three of these rules are probably the most important although the others are only slightly less so. In steel castings, the rules assume equal importance.

Uniformity of section thickness is important in any casting because, in addition to the shrinkage difficulties previously referred to, any metal just after solidification is at its lowest tensile strength. If extremely heavy and light sections are joined, it is possible that the light section has completely solidified and contracted while the heavy section has just solidified, just begun to shrink, and is at its lowest strength. The stress set up by such a condition sometimes is sufficient to cause rupture of the two sections.

Sometimes the effects of variations in section thickness can be compensated for by the foundryman through the use of chills, providing the variations are not too great. This, however, involves additional cost, which the designer should consider. The design and use of chills, where necessary, should be left to the foundryman and his metallurgist. Section uniformity is the best way to avoid the use of chills.

Section Thickness.—The best practice in regard to section thickness is to use the minimum that will provide the necessary strength, stiffness, and weight without requiring excessive pouring temperatures. High pouring temperatures in some metals result in abnormal physical properties. Again, some metals, such as certain gray irons, are more susceptible to variation in properties across a given section than others. Generally, although not always, the high-strength irons possess more nearly uniform physical properties throughout the section than do the lower strength irons. Then, too, some irons that are gray in heavy sections are white or mottled (part white and part gray) if poured into thin sections, showing that the rate of cooling affects structures and has, in turn, a marked effect upon hardness, machinability, and other properties. In gray iron, however, hardness is not necessarily an index of machinability.

Incidentally, in gray iron, there is another reason why too great a variance of section should be avoided. It often is difficult, without additional cost, to make and control an iron that will give the properties required in all sections when sections vary greatly in thickness. Where this does occur, the casting may contain gray, mottled, and white sections, the latter being practically unmachinable. This particular difficulty of melting and control, as experienced in gray iron, is not so pronounced in the other metals, although shrinkage difficulties, previously mentioned, are still present.

Minimum Section Thickness.—There are no well-defined minimum section thicknesses that are feasible to cast even for a particular type of metal or alloy, as the size, intricacy, and application of the castings, and detailed composition of the metal, are the real factors that determine minimum section thickness. The following are the normal minimum section thicknesses for various general classes of metals cast in sand and *are given as a guide only.*

RECOMMENDED MINIMUM SECTIONS FOR SAND-CAST METALS

Material	Normal Minimum Section Thicknesses, Inch
Gray cast iron (soft)	1/8
White cast iron	1/8
Malleable iron	1/8
Steel	3/16
Brass and bronze	3/32
Aluminum	1/8

It should be remembered that the relation of cross section of the various members in a design has as much to do with the minimum section thickness permissible within that design as any other factor, although this relation may dictate sections heavier than the normal minimum possible.

The use of chills also has an effect on the minimum section possible within a design. In case of sections remote from risers, it ordinarily is possible to produce castings without the use of chills where section thicknesses are not less that 80 per cent nor more than 120 per cent of adjacent sections.

It is again emphasized that the figures in the above table are *normal* minimum sections, but thinner sections can be cast under certain circumstances. Thus, for example, sand castings of small size, such as some found in low-priced door locks made of gray iron, have sections as thin as 1/16 in., but they constitute an exceptional case. Sections of such thickness cannot be expected in high-strength gray iron. Gray irons cast in such sections usually are of the high-carbon variety containing relatively high percentages of phosphorus to promote fluidity. Such irons are low in strength.

Economy in metal and hence in weight, of course, dictates the use of the thinnest sections that can be employed and still afford adequate strength, stiffness, and other properties necessary in the design. Naturally, there is no point in specifying a section so thin that it cannot be cast. A competent foundryman knows the approximate limits feasible in a casting of a given size and shape to be made in a given alloy and should be consulted before the final design is made. If the section thickness desired is below that thought to be feasible, tests can be run to determine the minimum feasible section for the shape and size of casting needed. The expense of such tests, in general, should be borne by the purchaser.

It should also be remembered that certain metals are more sensitive than others to variation in section thickness. This is particularly true in the case of a gray iron, as has been noted elsewhere. In the casting of steel, extremely thin sections require high pouring temperatures, which tend to produce abnormalities. In the casting of any metal, the thinner the wall section, the greater the chilling effect of the mold walls on the metal, and the lower the pouring temperature of the metal, the greater is the mold wall effect. This being the case, the designer should not recommend sections so thin that they have a tendency to remain unfilled. Such designs result in high scrap losses and higher net cost than if the thin section is made somewhat thicker. In general, sections that do not vary too much in thickness in relation to the thickness of adjoining sections, even though all sections be thin, make for rapid casting and rapid cooling of the castings produced as well as for economy in metal.

Member Junctions.—Irregularly situated heavy sections, connected by thin members, result in a series of localized hot spots during cooling, thus preventing the regular and progressive solidification of the casting desired and often resulting in rupture at or near junctions because of contraction stresses, as previously noted.

Where light and heavy sections are unavoidable, the transition from one to the other should be as gradual as possible. This may be accomplished by tapering sections or by proper fillets or both. Figure 14 illustrates the various methods for blending heavy and light sections. These suggest that flowing lines be used in the design of castings.

If blending of sections cannot be attained as in Fig. 14, fillets of fairly large size should be used at junctions, especially at interior corners, but fillets should not be so large as to result in undue thickness of section at junction, as explained below. Sharp corners in any design are to be avoided. Fatigue testing has demonstrated that sharp corners result in stress concentrations. In a casting, this condition is exaggerated because of the manner in which the metal solidifies around the corner. Solidification generally progresses from the mold face inward. At a sharp corner, crystals form in such a way as to constitute planes of weakness. In some metals, steel, for example, this weakness is difficult to overcome, but in alloys with a narrow freezing range, such as high-conductivity copper alloys, this weakness is not so pronounced although still present.

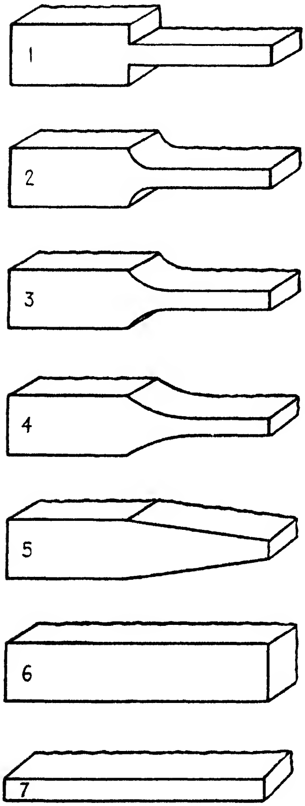

FIG. 14.—Good and bad methods of designing section junctions and sections: (1) poor design, (2) not recommended, (3) fair, (4) good, (5) best and, in some cases, better than 6, (6) no change in section (in general recommended design), (7) the same as 6.

For these reasons, engineers should use fillets at member junctions regardless of whether tapering sections can be used or not. Figure 15 illustrates the types of fillets and radii found to produce the best results in steel castings in an investigation of this problem by the United States Naval Research Laboratory. In the author's opinion, the same general design principles should be considered in joining sections of castings made from other metals.

The avoidance of sharp changes in section also applies to the design of pads and bosses. Figure 16 illustrates how a radius should be applied at a boss.

The radius of a fillet to be used in any application should equal the section thickness. In joining two members of unequal thickness, the fillet radius should equal the mean of the section thickness.

Cross Members.—Figure 17 represents a right-angled crossing of members of equal thickness, such as those frequently found in the reinforcing ribs under a plate. The mere crossing of the members increases the mass of metal at the crossing point and retards cooling of the metal at that point. (It is to be noted that radius S_2 is greater than radius S_1.) The condition may even

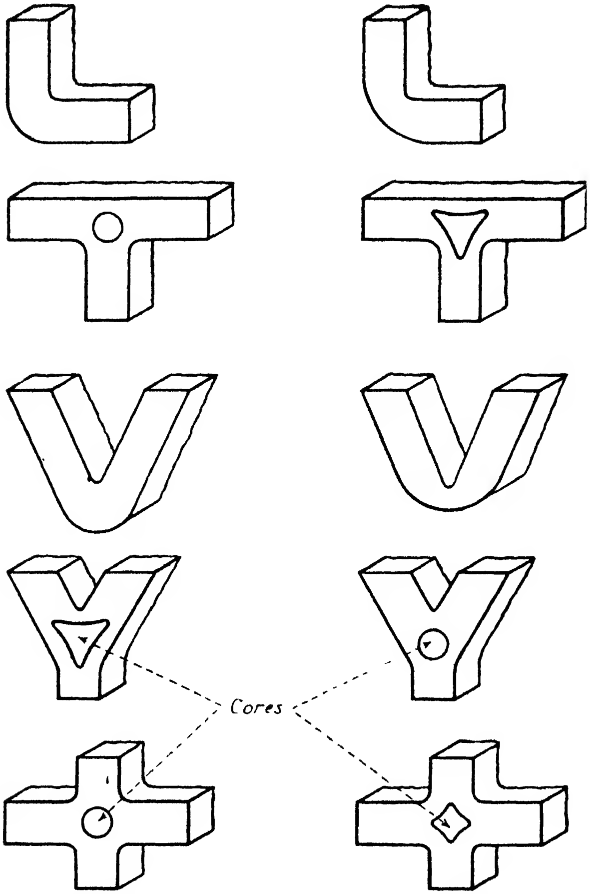

FIG. 15.—Methods of securing equalization of cooling stresses and acceleration of solidification in various types of joined members. (*U. S. Naval Research Laboratory for Steel Castings.*) Designs on the left are considered to be the best and most practical; those on the right are satisfactory. Where heavy sections of several inches thickness are joined, a core is used at the juncture to equalize section thickness.

be aggravated when liberal fillets are used and applies to all cases where members intersect.

Often it is feasible to avoid the crossing of members by staggering them so that the casting will have the desired stiffness and

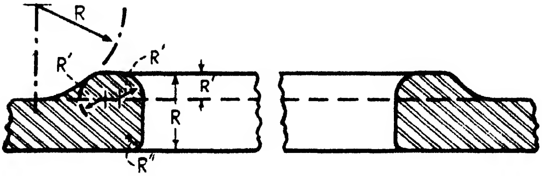

Fig. 16.—Gradual blending of thick section into surrounding thinner metal. Where bosses are used, they should be blended gradually into the body of the casting. The radius R should equal the section thickness and radius R' equals boss thickness. The radius R'' is included to illustrate that sharp corners should not be used in a design.

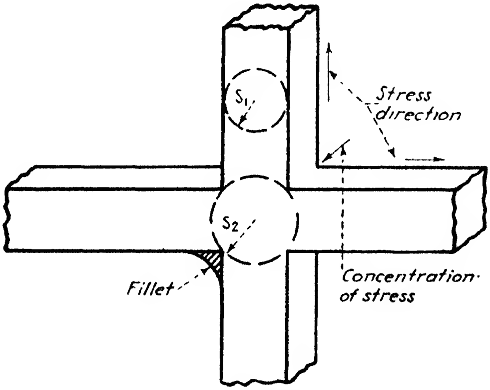

Fig. 17.—Concentration of stress occurs at an angular connection. Use of fillets helps to secure stress distribution. Circles with radii S_1 and S_2 are drawn to show increase in section size. Radius S_2 is greater than S_1, illustrating that the mere crossing of sections increases section size.

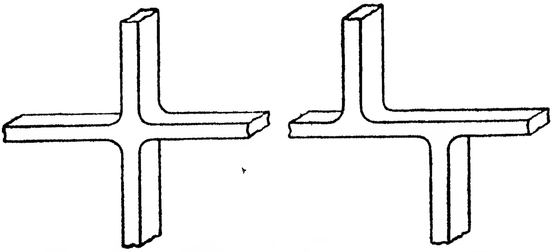

Fig. 18.—Intersecting members arranged as at right is preferred. Staggering intersecting members gives more nearly uniform metal section and provides for more even solidification at the intersection.

other properties without being injuriously affected by hot spots (Figs. 18 and 19).

Where staggering cannot be done because of dimensional restrictions, the next best procedure is to form a depression or core a hole at the crossing point, so as to accelerate solidification and better to equalize the cooling stresses, by removing some of the metal at the critical point, as shown in Fig. 20.

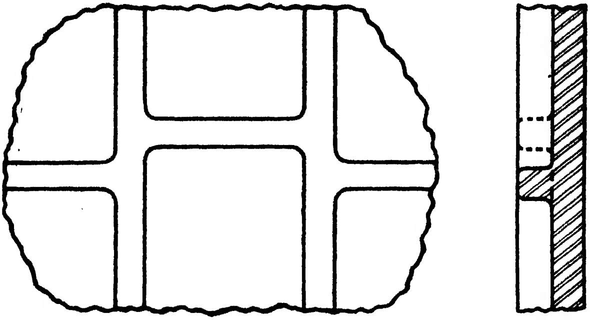

FIG. 19.—Staggering ribs and webs promotes uniformity in rate of cooling.

Ribs.—Ribs are used primarily as stiffeners and reinforcing members. In certain castings, the tendencies of large flat areas to distort, when cooling from casting temperature, may be eliminated by properly designed and correctly located ribs. Rib construction may also be used to advantage to reduce weight of castings and attain section uniformity. Ribs should solidify earlier than the section which they adjoin and act as a bond and as conductors of heat to promote cooling of the section involved and prevent distortion.

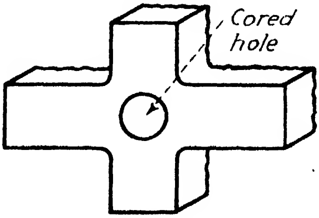

FIG. 20.—Method of coring to secure solid junction and eliminate hot spots. Diameter of the core should be such as to make the junction section as nearly equal in cross section to the joined members as possible.

The relationship of rib section to main section should be such as to permit, as far as possible, a uniformly graded metal section. Where feasible, rib intersections should be staggered. Figure 21 illustrates recommended rib designs for castings, and Fig. 22 shows additional designs recommended because their sections are uniform in thickness.

In average designs the preference is for ribs having depth considerably greater than thickness. It should be remembered that thin ribs, while accomplishing the desired early solidification for keeping the piece from warping, often cause high solidification stresses to be set up where the rib joins the body of the casting. Rules discussed under Member Junctions apply to the junction between ribs and casting. Ribs should be proportioned, in general, in such a manner that their thickness approaches that of the section to which they are joined, as is advocated for the joining of major casting sections.

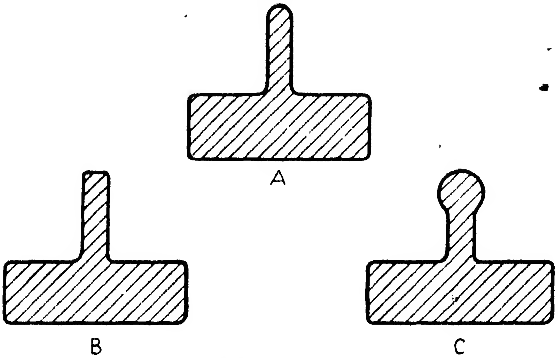

FIG. 21.—Three types of rib designs: *A* is not advocated because of high fiber stresses possible in the extreme outer edge. *B* is more satisfactory. *C* is best design, as outer fiber stresses can be reduced to a minimum, but its use is advocated only where it does not unduly complicate the molding procedure.

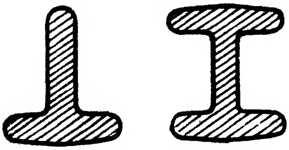

FIG. 22.—T- and H-shaped ribbed designs have the advantage of uniform metal sections and hence uniform cooling.

Figure 19 illustrates the manner in which ribs on a flat plate should be staggered to promote equalization of sections. Figure 23 illustrates the use of rib construction to equalize section thickness at a boss. In this case, supporting rib construction, as illustrated at the right of Fig. 23, is used under a pad or flange to avoid the thick section in the original design, as shown on the left of the same figure. It should be noted that, in the ribbed design, the boss surface area has not been decreased.

Bosses and Lugs.—Properly designed bosses and lugs often are of great assistance to the foundrymen in reducing molding costs. An attempt should be made by the designer to promote uni-

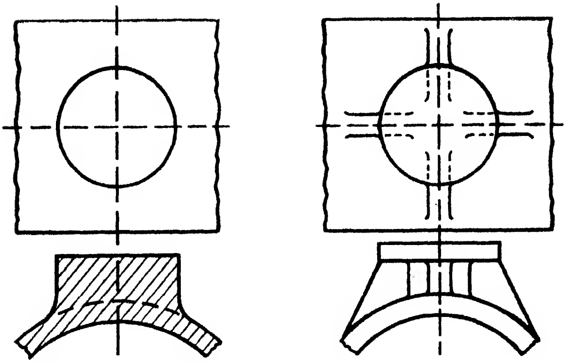

FIG. 23.—Designs for bolting or bearing bosses. That at left is poor because of the thickened section at the boss. That at right is good, even though it involves the use of cores, because it promotes section uniformity.

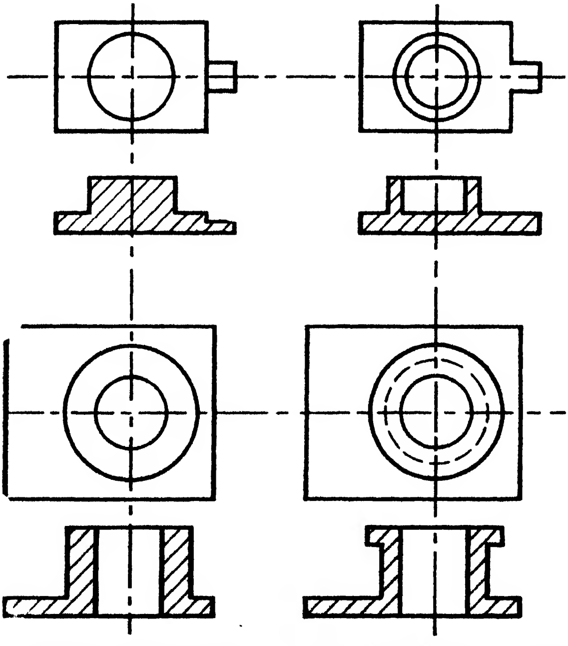

FIG. 24.—Bosses on large castings. Those at left are common designs but are unsatisfactory because they involve, at the bosses, metal sections thicker than the main casting section through which the bosses are fed. The heavier metal sections of the bosses may have defects because of inadequate feeding. Those at right are designed to give more nearly uniform metal sections and permit sound castings to be made with less weight and lower machining cost.

formity of metal section between bosses and lugs and the body of the casting. Such a practice allows such projections to be fed properly through the body of the casting, which in turn should be fed by properly located risers.

Figure 24 illustrates two types of bosses often found on large castings. The designs at the left have heavier sections at bosses than in the main casting section through which the bosses are fed. Such designs, for this reason, invite defects. The designs on the right are such as to equalize the solidification, as less metal need be fed, because of uniform metal section. As less metal is required, the weight of casting is lowered.

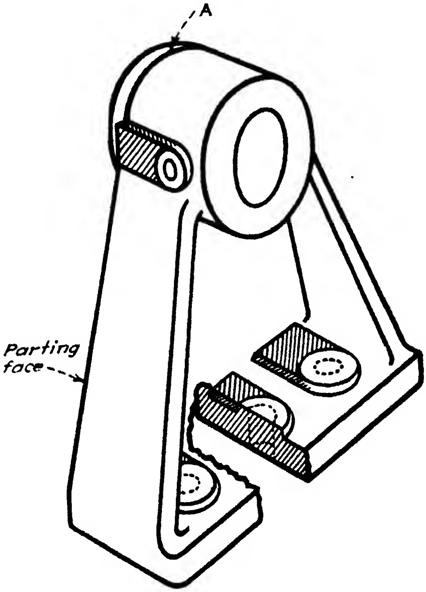

FIG. 25.—Casting with bosses, which, if left circular, requires loose pieces on the main pattern, entailing additional pattern cost for loose sections and higher molding cost. If sections between bosses and parting face are filled in, the boss section can be solid with the pattern, making for ease in molding. The parting line is shown at *A*. Wide variation in section thickness is unfavorable and might be avoided, especially if castings were cored out on underface, though this might increase cost.

Some engineers appear to have a preference for round bosses. If such bosses, or any other type, can be cast without the necessity of loose pieces on the pattern, there is no reason why they cannot be used providing they are properly blended into the section on which they occur.

Loose Pieces.—Any design requiring the use of loose pieces in pattern construction and in molding costs more to produce than a corresponding one in which such features are not necessary. When the mold is made for a design involving the use of loose pieces, the latter remain in the mold when the pattern is withdrawn. Additional time is consumed in drawing the loose pieces, thus increasing the molding time and hence casting cost.

In the casting (Fig. 25) the bosses are required to be round, and they must be molded as loose pieces on the main pattern. Such designs involve higher pattern cost and additional molding cost. If the bosses are extended to the parting (as indicated by the shaded area) they can be solid with the pattern, making molding much easier and reducing pattern cost also.

The use of loose pieces, though often necessary, not only increases the casting cost but also, in many instances, is the cause of an inferior product. For these reasons, loose pieces should be avoided whenever it is possible to obtain a satisfactory casting without them.

Pockets.—Deep pockets and small recesses should be avoided if possible when the casting is designed. Such features increase cleaning costs, often quite out of proportion to any advantages gained. If pockets and recesses cannot be avoided, as many large openings as possible should be provided so that the casting can be cleaned properly. It is good design practice to allow sufficient room in all castings for accessibility to all parts for cleaning purposes.

Cores.—Cores are masses of sand placed or created in molds to form cavities at desired locations in the castings. Cores usually are made of baked sand mixtures. If a design requires such cores, core boxes must be provided for making them. These core boxes are a part of the pattern equipment, as are core driers, which are often required to keep the cores in shape while they are passing through the baking cycle. Cores must be inspected, sometimes pasted (if made in sections), and sometimes coated or otherwise treated before they can be inserted in the mold. As all these items add materially to costs, either dry sand cores should be eliminated, or their number should be minimized except where the benefits gained outweigh the extra cost. Often the use of dry-sand cores is a necessity and many castings today require that they be used. Cores not only save metal and reduce machine work but often have an important effect in helping to maintain sections of fairly uniform thickness. These are a great advantage and in many instances they outweigh the extra cost of the casting itself, including the core work required. Figure 26 shows the cores required for a complicated casting. The use of cores made possible the manufacture of this design as a unit.

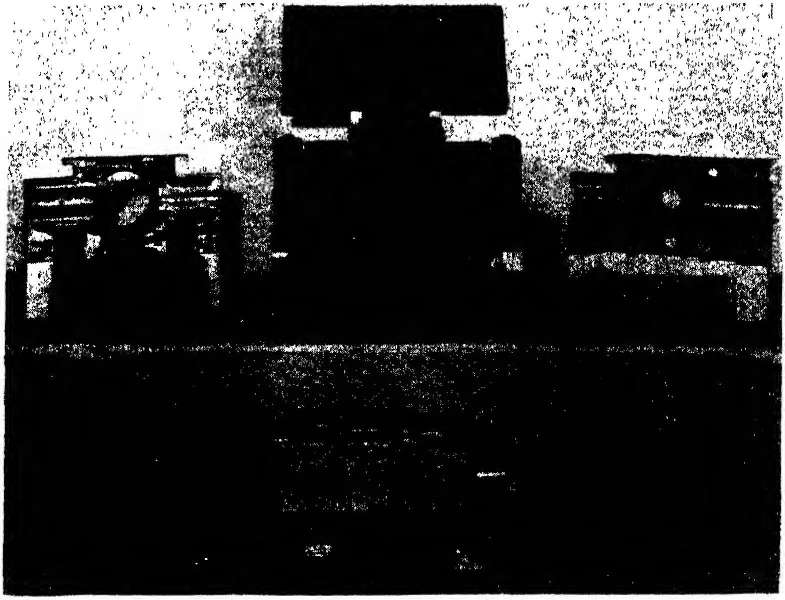

FIG. 26.—A complicated casting design the manufacture of which is made possible by the use of cores. The cores shown were set in a machine-made mold.

Elimination of Interior Cores.—Designs sometimes can be such that the pattern can be made to leave its own green-sand core or cores. Figure 27 shows two views of a casting requiring the use of complicated interior dry-sand cores, elaborate and expensive core-box equipment, and special attention during production. Figure 28 illustrates the redesigned casting, which eliminates the use of interior dry-sand cores by permitting the pattern to leave its own green-sand core when withdrawn from the mold. Some cores were required to produce the brackets and ribs on the exterior surfaces, but the equipment was simple and inexpensive and production cost of the casting was much lower than in the first design.

The ideal casting, both from the viewpoint of the foundry and from that of economy, is one which can be molded to leave its own green-sand core or cores. Though designers cannot always take advantage of this fact, they should do so whenever possible without undue sacrifice in other directions, as cost is then minimized.

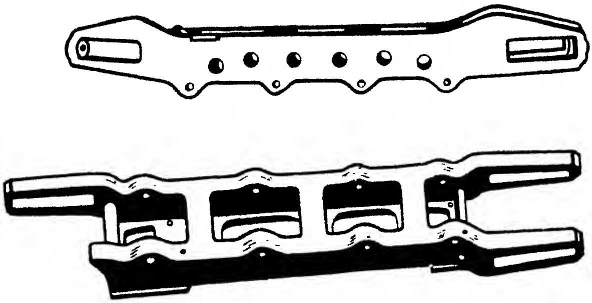

FIG. 27.—Casting design that involves the use of complicated interior cores in the mold, making for high core cost, high molding cost, and extra cleaning cost.

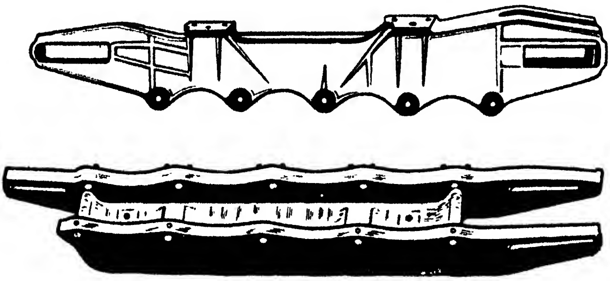

FIG. 28.—Same casting as Fig. 27 redesigned to leave its own green-sand core, thus avoiding the use of the expensive core boxes required for the design shown in Fig. 27. Simple, low-cost core-box equipment was required to make the cores used to produce the exterior brackets and ribs. The smaller, simpler cores were made and set at lower cost than the larger, more complicated cores required, by the design in Fig. 27.

Cored Holes.—In addition to being used to create major cavities and contours cores often are used to form holes that are later drilled to dimensions, thus saving machining time as well as metal. The minimum sized hole that can be cored varies for the different metals as well as with other conditions. A core for an iron sand-blast nozzle not over 3⁄16 in. in diameter functioned perfectly when surrounded by relatively heavy metal sections, but this core was so critical that six grains of sand of improper size in one section made the difference between success and failure. On the other hand, it is sometimes advised that no hole smaller than 1 in. in diameter should be cored in sections of steel castings over 2 in. thick and that cores for such castings should not have a diameter less than half the thickness of the wall they pierce. Since the number of variables is so great no fixed rules as to minimum core size is given. The matter is one which should be discussed with the foundryman. If there is any doubt, however, that the insertion of a small core to provide a hole, say for a bolt, will cause casting trouble or will make core removal difficult and hence increase cleaning cost, it is better to require that the hole be drilled.

Core Length vs. Diameter.—Core length in relation to diameter is especially important in steel castings but should be given serious consideration in all castings where cores of considerable length and small diameter are contemplated in the design. Slender cores must be anchored firmly by core prints and supported in some manner to prevent sagging.

If possible, such slender cores should be avoided for at least two reasons. First, a long slender core necessitates the use of chaplets for support, and chaplets should be avoided, if at all possible, especially in castings that must withstand pressure. It is difficult to secure complete fusion of chaplets with the metal, thus leaving a potential source of a flaw or porous spot.

Secondly, when a long thin core is surrounded by massive metal sections, the cleaning of the core from the casting is an expensive process. In such cases, the pressure of the liquid metal often is so great that it is forced into the core between the grains of sand so that the core becomes a mass of metal and sand. The time necessary to remove the core and clear the casting surface in such instances is so high as to defeat the purpose of the core. If such cores are demanded, the purchaser must expect to pay extra for core removal.

A cored recess or hole is most likely to be cleaned with a minimum of labor and with a maximum of effectiveness (1) when the opening thereto has an area, proportionately large compared with the thickness of the surrounding wall of metal; (2) when the recess or hole is not of excessive depth compared with outlets accessible for removing the core used to form it; (3) when the recess or hole, if long, is straight rather than curved (thereby facilitating the use of cleaning tools); and (4) when suitable outlets are provided not only to facilitate cleaning but to aid in firmly placing the required cores.

Venting.—Venting of cores also is important from the design standpoint. Internal cores, (that is, those largely surrounded by metal) require adequate provision for venting the gases generated when the core comes in contact with the molten metal. In such cases, the designer should provide for the passage of this gas through one or more prints.

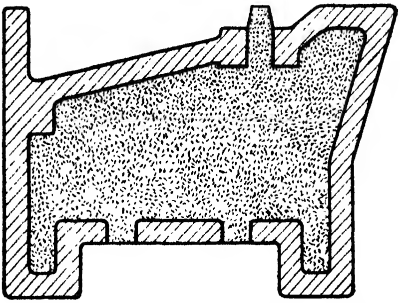

Fig. 29.—Section through aluminum-alloy cylinder head showing core print left to provide a vent and to permit removal of core sand when casting is cleaned.

Cleanout Holes.—Some castings must be designed in such a manner that a core is entirely surrounded by metal save for relatively small cleanout holes, though such a condition is to be avoided if at all possible. In such castings, however, cleanout holes for the core must be provided. Such holes may later be plugged before or subsequent to machining or by welding. Figure 29 illustrates a section through such a casting.

Dimensional Tolerances.—The general design of castings, the number of castings to be produced, and their size are three of the most important factors influencing dimensional tolerances. This fact makes it *essential that allowable dimensional tolerances be a matter of agreement between the producer and the consumer.* It is especially necessary, in cases where close tolerances are required, that the manufacture of the pattern equipment be under the supervision of the foundryman.

A general rule applicable to allowable dimensional tolerances is that such tolerances should be at least half the maximum shrinkage allowable for the metal involved. This rule does not always hold, however, and many castings are made with sufficient accuracy so that no machining or finishing, other than that normally done in the foundry cleaning department, is required to fit them for use. This is especially true of malleable-iron castings when purchased in sufficient quantities to justify the use of the coin-pressing or die-straightening processes. In automotive-production foundries, where castings manufacture is highly specialized and where millions of castings of the same general type, such as cylinder blocks, are produced annually and where experience has extended over a large number of years, the castings are made within exceedingly narrow dimensional tolerances and with only a few thousandths of an inch finish allowance.

Such close work is possible, however, only in the case of highly specialized quantity production and long familiarity on the part of the foundryman with the given design. The designer cannot expect a new casting (even though the order for it may require production in large quantities) to be made within such narrow dimensional limits. Only experience and, through it, an understanding of the vagaries of mold and metal behavior in a given casting make the specification of extremely narrow tolerances feasible. In Table VII are given, *but only as a very rough guide,* the approximate maximum tolerances that can be held, without machining, on castings of various classes. Minimum tolerances are sometimes specified within a few thousandths of an inch, as cast, but are permissible only under favorable conditions, as previously mentioned, especially when malleable-iron castings may be coin-pressed or die-straightened.

TABLE VII.—APPROXIMATE MAXIMUM TOLERANCES FOR SAND CASTINGS

Metal	Minimum Over-all Dimensional Tolerance, Inch
Cast iron	1/16
Malleable iron	3/32
Cast steel	5/32
Aluminum alloys	5/64
Magnesium alloys	11/64
Brass	3/32
Bronze	1/8

Also, as a result of careful planning and cooperation with the foundryman and patternmaker on the part of the designer, and of careful study of the production operations on the part of the foundryman (as determined, for example, by the production of sample castings), closer tolerances than those specified in Table VII are obtainable, even on medium-sized castings. On the other hand, with very large castings, it may be necessary to require wider tolerances than those listed in Table VII.

If the designer does *not* seek the cooperation of the producer and does *not* afford him the opportunity of careful production planning and a study of the vagaries of the individual casting design, as mentioned above, *closer* tolerances than those given in Table VII should *not* be specified. The most important of the three general considerations that influence dimensional tolerances are general design or shape, but the size of casting also is important.

Nothing is gained, of course, in specifying close tolerances when wider ones meet every requirement, and a great deal of delay and misunderstanding may result if tolerances are set closer than they need be.

Because of the wide variation in size and design and in the production operations involved, any general statement concerning tolerances that may be expected by the engineer for a given design necessitates many reservations. A competent foundry, with proper engineering and control staff, can produce the best possible castings from a given design when allowed to cooperate with the designer from the inception of the casting until actual production is begun.

Machine finish allowances naturally should be held to a minimum for economy in the machining operation. The allowance varies usually with the size of the casting. *As a guide*, the machine finish allowances for various metals, as given in Table VIII (from the "Cast Metals Handbook")[1] may be used, but particular attention should be paid to the notes at the bottom of the table. It should be remembered, as previously stated, that greater machining allowances should be specified for parts cast in the cope of the mold than for those cast in the drag. Table VIII applies to allowances on parts of castings formed in the drag.

Use of Metal Inserts.—Castings are sometimes so designed as to call for the use of metal inserts to be cast in place. Such inserts invite trouble and extra cost. Not only must these

---

[1] Published by the American Foundrymen's Association, Chicago.

TABLE VIII.—GUIDE TO MACHINE FINISH ALLOWANCES FOR VARIOUS METALS

Metal	Pattern size, in.	Bore, in.	Finish, in.
Cast iron	Up to 12	1/8	3/32
	13 to 24	3/16	1/8
	25 to 42	1/4	3/16
	43 to 60	5/16	1/4
	61 to 80	3/8	5/16
	81 to 120	7/16	3/8
	Over 120	Special instructions	
Cast steel*	Up to 12	3/16	1/8
	13 to 24	1/4	3/16
	25 to 42	5/16	5/16
	43 to 60	3/8	3/8
	61 to 80	1/2	7/16
	81 to 120	5/8	1/2
	Over 120	Special instructions	
Malleable iron*, †, ‡, §, ‖	Up to 6	1/16	1/16
	6 to 9	3/32	1/16
	9 to 12	3/32	3/32
	12 to 24	5/32	1/8
	24 to 35	3/16	3/16
	Over 36	Special instructions	
Brass-, bronze-, and aluminum-alloy castings¶	Up to 12	3/32	1/16
	13 to 24	3/16	1/8
	25 to 36	3/16	5/32
	Over 36	Special instructions	

[*] Allowance ranges from 1/8 to 1 in. Values given for finish are normal for ordinary finishes on the drag side, or on vertical surfaces where distortion is an unlikely factor. *If necessary to have finished surfaces on the cope side of the castings, it not infrequently is necessary to double the finish allowance.*

[†] When castings are constructed so that they warp more than the average amount, the allowances given should be increased.

[‡] Disk grinding: only sufficient finish required to take care of draft and possible warpage.

[§] Coin pressing: practically no finish allowance required. As the properties of malleable iron particularly lend themselves to this method of finishing, it should be employed to a much greater degree than it is.

[‖] For small parts, an allowance of from 1/32 to 1/16 in. is satisfactory. Larger parts require a slightly greater allowance. The allowance necessary depends on (1) whether the part is to be made in sufficiently large quantities to justify the making of straightening dies; (2) the fact that many finishing operations on malleable castings can be performed in a coining press, which practically eliminates finish allowance in the case of those particular operations; and (3) the further fact that many disk-grinding operations are performed on malleable castings, for which only a few thousandths finish is required.

[¶] For small medium-sized nonferrous castings, 1/8 in. is a customary allowance, with correspondingly larger allowances on larger castings. On split, railway, motor bearings, the allowance is about 1/64 in. at the parting for a grinding operation and 3/32 in. each on the outside and inside diameter on a side for machining.

inserts be kept scrupulously clean, that is, free from dust, rust, or other oxide on the surface, grease, oil, and even the perspiration of the hand, but, in some instances, they must be preheated so as to form as close a bond between the metal and the insert as possible.

Even when preheated, the temperature differential between the liquid metal and the insert is considerable. The liquid metal must heat the comparatively cold metal insert, thus causing it to expand, while the molten metal is cooling and contracting because of heat absorption by the insert. Hence the possibility of local stress reversals, converting the stress over a small area from tension to compression, must not be overlooked. If inserts are used, they should be knurled or grooved to ensure a good mechanical bond, as this helps to hold them securely even though actual fusion with the metal of the casting may not occur. Sufficient metal must be provided around such inserts to eliminate the chance of cracks developing adjacent to the insert.

Size of Mold.—Design of a casting should be considered from the standpoint of the size of the mold necessary to make the casting. As the mold size increases, the cost per mold increases. Sometimes, the total mold bulk can be reduced by making the part as two or more castings, though this is likely to involve extra machine work if the two parts have to be joined later. In other instances, the part may be redesigned to take a smaller flask than required originally, as shown in Fig. 30. In any event, economy dictates the use of the smallest possible casting that will meet requirements.

When the castings are to be made by a foundry already selected, it often contributes to economy to learn what flask sizes the foundry possesses. This makes it possible to design the casting to utilize the flask equipment on hand and thus avoids the chance that special flask equipment for a particular job will have to be purchased.

Finishing Costs.—Where cost per casting must be minimized, the effect of cleaning and finishing costs deserves study as, in some instances, such costs outweigh by far the molding cost or even the total cost of the casting itself, especially if polishing and plating happen to be required. The designer should keep in mind the expense involved in cutting off risers in inaccessible spots, especially on high-shrinkage alloys such as manganese-bronze or iron-aluminum-bronze or on alloys difficult to machine. Also, the difficulties encountered in cleaning small-diameter holes in heavy sections, especially holes that are not straight, should not be overlooked. Where smoothness is an important factor affecting finishing cost, as is often the case, it may be expedient to choose an alloy that can be cast with a relatively smooth finish even though this may increase metal cost. It is best to avoid recesses that are hard to clean and surfaces that are difficult to machine (when machining is necessary) unless it is certain that the extra cost involved is justified by some compensating advantage.

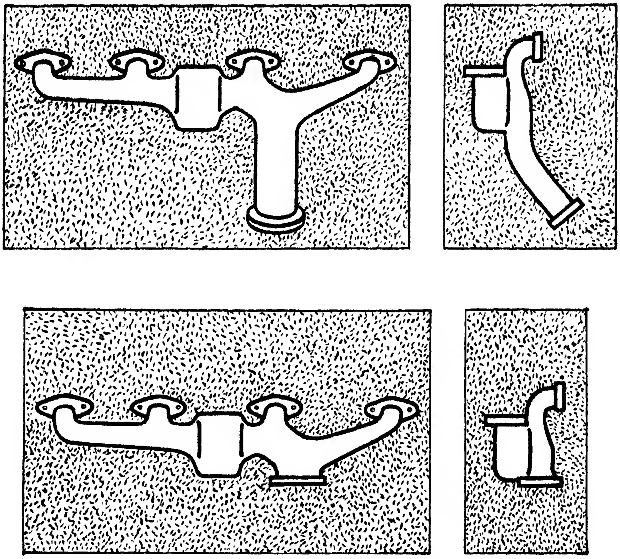

FIG. 30.—*Top*, end view of a manifold as first designed; *below*, manifold redesigned to permit a reduced volume of sand, thus reducing mold cost, as smaller flasks are required.

Marking Castings.—It is usually desirable that the foundry's trade-mark appear on the casting, frequently accompanied by the pattern number, part number, metal symbols, and other descriptive marking. In general, however, such markings should involve as few characters as possible and be limited to the drag side as well as to an area that will not unduly hamper the foundrymen's choice of gate-inlet locations. Letters must have adequate draft and should not be so placed as to require loose pieces in the pattern unless the extra cost of such construction is amply justified.

The presence of many cast numbers, letters, and symbols ordinarily is of little or no significance as affecting the serviceability of medium- and large-sized castings. But the matter becomes important when many embossed marks are required on small castings with thin sections that must be pressure-tight. Excessive marking may cause small isolated hot spots and attendant difficulties, if increased section thickness is involved. This is the experience of many foundrymen, particularly steel foundrymen, who have been faced with the problem of producing castings of $\frac{3}{8}$ in. or less metal section with many letters, $\frac{1}{8}$ in. or more in height, scattered over the body of the casting.

Emphasis has been given to the matter of marking in a precautionary note that appears in each of several specifications for steel castings adopted by the American Society for Testing Materials. The note reads thus:

> The resistance of a sand mold to the erosive effect of inflowing metal is aided by smooth mold surfaces. Cast identification marks are formed by making indentations on the face of the mold. For the prevention of small defects caused by dislodged particles of molding sand, there should be provided the minimum feasible number of cast identification marks.

Heat-treatment as Affecting Design.—Designers of castings should properly take advantage of the fact that certain cast metals may be heat-treated to develop maximum physical properties, as this can be made to reduce the weights of the casting and sometimes its cost. Maximum physical properties in many metals are obtained by quenching and drawing or tempering heat-treatments. In designing castings to be so treated, it is well to remember that, in such treatments, heavy sections do not cool so rapidly as thin sections.

When there is great variation in section thickness within a casting, the quenching treatment may develop stresses sufficient to rupture the thin members of the casting. The possible development of such stresses in a design may preclude quenching, in water, oil, or air. In some instances, even though water quenching and subsequent tempering may be desirable from a physical-property standpoint, the design may limit the applicable treatment to an oil or air quench with a sacrifice in the desired properties. For these reasons, castings to be heat-treated require scrupulous adherence to the use of sections that are uniform in thickness or, if sections vary, to the use of gradual blending from thick to thin, as these factors greatly influence the possible increase in rejects, which in turn affects costs.

Conclusion.—From the above discussion, it is evident that the two main principles that should be observed in the design of castings are uniformity of section thickness and blending of heavy sections into light ones where section uniformity is impossible. While, as already indicated, many other considerations enter into the design of castings that are to be made in large quantities in the most economical manner and at the same time be of greatest usefulness, adherence to the two principles mentioned is of paramount importance if cost is to be minimized and satisfactory castings secured.

Summary of Rules for Design.—From the foregoing, it should be apparent that there are no inflexible rules governing the design of sand castings. It is also clear, however, that there are certain conditions that the designer should strive to meet and others that he should avoid when laying down a design of a casting, especially if it is to be produced in quantity at minimum cost. These desirable procedures are summarized below. It should be understood that the rules given are general and that there may be valid grounds for departures from them to secure certain results not attained otherwise.

The rules may serve as a check list, which the designer may employ effectively when a design is in progress or nearing completion. If he finds that any of the rules are violated and that he can change the design to avoid the violations without sacrificing something more important, the casting will be produced with a minimum of difficulty in the foundry and probably at a lower cost than if the rules are neglected.

The following procedure is suggested at the inception of the casting design:

1. Make a sketch of the proposed design.
    a. See that sections are maintained as nearly uniform in thickness as conditions permit.

   b. Where uniformity in section thickness is not feasible, make the transition gradual, never abrupt, blending heavier sections into light ones.
2. Seek the constructive criticism of the competent foundryman who is to make the castings and endeavor to follow his suggestions where they appear proper from a design standpoint, with a view to simplifying and avoiding difficulties in the production of the castings.
3. Explain to the foundryman the conditions that the casting must meet, where it fits into the total assembly, and what functions it must perform.

By observing the following rules in the preliminary drawing, the foundryman will have minimum suggestions to offer, as their purpose, aside from being an aid toward securing sound castings, is to promote ease of manufacture.

Rule 1. Visualize the casting in the mold and design it so that, as placed in the mold, it will solidify regularly and progressively from the lowest to the highest point.

Rule 2. Avoid designing castings so that heavy sections occur below lighter sections when the casting is in the mold, thus making adequate feeding of the heavy sections difficult or impossible.

Rule 3. Design the casting so that it can be poured easily in all its parts with a minimum number of risers, so that the risers, when required, are located at the highest point in the mold, and so that the last fluid metal is contained in the riser.

Rule 4. Use fillets at junctions, especially at inside corners, but avoid making them so large as to produce excessively heavy cross sections at the junctions.

Rule 5. Employ ribs where they help to avoid warpage or are needed for extra stiffness and can be used to lower weight and still not interfere with the ready preparation of the mold.

Rule 6. Where intersecting ribs or junctions of members result in undue concentration of metal with resulting hot spots, consider the feasibility of staggering or, in the case of large castings, the use of simple cores at the intersections to equalize cross section at the junctions.

Rule 7. Avoid the use of deep pockets in designs, as such pockets generally involve an undue increase in cleaning costs.

Rule 8. Aim to make the casting as simple in structure as conditions permit, investigating the possibility of using two or more separate castings, to be joined subsequently if a one-piece casting is highly complex and gives promise of lower over-all cost if cast in parts.

Rule 9. Avoid the use of as-cast dimensional tolerances that are closer than necessary. Consult the producing foundry to make sure that such tolerances as are specified can be met without undue cost increase.

Rule 10. Where lettering and similar markings are required, see that they come on a face or surface of the casting parallel or nearly parallel with the mold parting and in such a position as to impose minimum restriction to metal flow and to proper progressive solidification.

Rule 11. Avoid the use of metal inserts, if possible. Such inserts should be avoided especially where fusion between the insert and the casting is absolutely essential (unless it can be guaranteed by the producing foundry) or unless the advantage gained is clearly not offset by greater difficulties in production than the proper insertion after casting would entail.

Rule 12. When castings are exposed to view in the finished product, see that they are as sightly in appearance as conditions permit, with simple and flowing lines and exteriors free from unnecessary projections.

Rule 13. Keep the size and weight of the casting, and hence the sizes of sections, as small as is consistent with adequate performance of its function.

Rule 14. Adhere, as far as conditions permit, to designs that simplify both the pattern equipment required and the molding procedure, avoiding the use of loose pieces in the pattern, if possible, and using them only where desired results cannot be secured by some other method, as loose pieces in the pattern generally mean increased molding costs.

Rule 15. Avoid the use of designs that involve irregular parting lines in the pattern equipment when a casting that meets requirements can be designed to have its parting line in one plane, as straight-pattern parting lines usually result in lower molding costs than irregular parting lines.

Rule 16. Permit the pattern equipment to be made with ample draft so that the pattern can be withdrawn readily from the mold without injury to the latter. Allow the use of as much draft as is required by the appearance of the casting and other factors, such as avoiding higher machining costs than are necessary or the use of too much draft, which causes too great an increase in section size at points where proper feeding is impossible. Ample pattern draft means easier molding.

Rule 17. Avoid designs in which more dry-sand cores than are essential are used, as designs such that the pattern can be made to leave its own green-sand core in the mold generally are the most economical to produce.

Rule 18. Where dry-sand cores are essential, make them as few in number and as simple as possible. Provide for points of adequate core support in the mold. In castings that must be pressure-tight, the use of cores that must be supported by chaplets should be avoided.

Rule 19. Make sure that interior cores, which cannot be avoided in a casting and which are nearly or entirely surrounded by metal, can be properly vented and that adequate cleanout openings are provided.

Rule 20. Avoid designs in which cores are so placed or are so slender that subsequent removal from the casting is difficult.

Rule 21. Avoid the use of long, slender cores surrounded by extremely heavy metal sections, as such cores are difficult to remove in the cleaning operation. When such cores are unavoidable, they should at least be straight and ample anchorage for them should be provided in the mold.

Some of these rules may appear self-evident, yet almost any foundryman can point to castings in the design of which seemingly obvious rules have not been heeded, with consequent needless increase in cost of castings. The rules do not, of course, cover all features of design but, where they are followed, production of castings will be simplified and costs lowered. It is, at least, worth while to check any casting design against the rules or procedures listed above and, where it is found that the rules have not been followed, to see whether the design can be altered to avoid this, with benefit to all concerned.

Bibliography

Bennett, J. S.: "Essentials in the Production of Sound Steel Castings," *Foundry Trade Journal*, Apr. 11, 1935, pp. 253 and 256.

Briggs, C. W., and R. A. Gezelius: "Studies on Solidification and Contraction in Steel Castings. III: The Rate of Skin Formation," *Trans. A.F.A.*, Vol. 43, pp. 274–302 (1935).

BRIGGS, C. W., R. A. GEZELIUS, and A. D. DONALDSON: "Steel Casting Design for the Engineer and the Foundryman," *Trans. American Foundrymen's Association*, Vol. 46, pp. 605–696 (1938).

BULL, R. A., "The Influence of Design on the Stress Resistance of Steel Castings," A.F.A. Reprint 37–35 (1937).

———: "Steel Castings as Machine Parts," *Machine Design*, April, 1931, pp. 36–39, and May, 1931, pp. 37–40.

———: "Uses of Steel Castings as Affected by Welding," *Metal Progress*, February, 1931, pp. 70–76, 154.

COLLIER, R. L.: "Streamline Your Castings," *Iron Age*, Aug. 6, 1936, pp. 38–39 and 104.

EDWARDS, F. C.: "Utilizing Tests in Casting Design," *Machine Design*, June, 1932, pp. 36–37.

"Efficient Casting Design," *Canadian Machinery and Manufacturing News*, January, 1933, pp. 34, 36, 38.

EVERETT, L. E.: by private communication, tests performed at University of Alabama, January, 1936.

FAWCETT, L. H.: "The Influence of Design on Brass and Bronze Castings," *Trans. A.F.A.*, Vol. 40, pp. 360–374 (1932)

HARBISON, C. B.: "Designers of Steel Castings Should Cooperate with Foundrymen," *Steel*, Vol. 98, No. 25, pp. 54, 56, June 22, 1936.

LANSING, J. H.: "Malleable Iron Castings, Their Design and Physical Properties," *Journal of Western Society of Engineers*, Vol. 37, No. 2, April, 1932.

LORENZ, F. A., JR.: "Notes on the Design of Steel Castings," Symposium on Steel Castings A.F.A. and A.S.T.M., *Proc. A.S.T.M.*, Vol. 32, pp. 58–76.

MELMOTH, F. A.: "Design," *Product Engineering*, April, 1935.

"The Necessity for Cooperation between Engineer-designer and the Foundry," *Proc. A.S.T.M.*, Vol. 31, pp. 374–387 (1931).

"Recommendations for Design of Non-ferrous Castings," Report of A.F.A. Non-ferrous Division Committee, *Trans. A.F.A.* Vol. 40, pp. 518–526 (1932).

ROBERTS, C. S., "Strength Plus Symmetry, Plus Modern Design—A New Formula," *Fabrication Progress*, December, 1936, pp. 141–142.

RUSSELL, M.: "Welding versus Casting," *Foundry Trade Journal*, Nov. 5, 1936, pp. 351–353.

SHEPHERD, H. F.: "Considering Design from Production Standpoint-founding," *Machine Design*, Vol. 4, No. 12, pp. 15–18, December, 1932.

"Steel Casting Design," *Product Engineering*, April, 1939, pp. 153–155, and May, 1939, pp. 206–207, and June, 1939, pp. 258–259.

TAUB, ALEX: "Correlation of Casting Design and Foundry Practice," A.S.M.E. Machine Shop Practice Division, *Reprint* 54–8, presented at meeting, December, 1931, New York.

WHEELER, K. V.: "Foundry Factors Affecting Steel Casting Design," *Trans. A.F.A.*, Vol. 40, pp. 125–152 (1932).

YOUNG, E. R.: "Designing Steel Castings," *Machinery*, May and June, 1924, pp. 701–703 and 790–792.

CHAPTER III

DESIGN OF SCREW-MACHINE PRODUCTS

By D. H. Montgomery

Reasons for the Screw Machine.—"Automatic screw machine" is the name commonly applied to a type of machine that is, in reality, a form of hollow-spindle turret lathe adapted to fully automatic operation. Such machines are made with single or multiple spindles, up to a total of eight spindles in some cases, but in all instances they retain the general characteristics of a lathe. In other words, they are adapted to manufacture products having chiefly surfaces of rotation produced by turning, forming, facing, drilling or boring, threading, and cutoff operations. But the machine differs from other lathes in that it is designed to function and to feed stock automatically. An important objective of the machine is to bring to bear on the work as many tools as are required, using some of them simultaneously or in rapid succession or both, so that the finished product is completed in minimum time and at minimum cost. Although screws and uncounted other threaded parts are turned out, the machine is by no means confined to the production of screws or threaded parts, as its name would indicate, and to this extent the term "screw machine" is a misnomer. But since the name is well understood and commonly used in the metalworking trade, it is here used and the term "screw-machine product" should be understood as including all types of products produced by the automatic machine, whether they are screws, have threaded portions, or are without threads of any kind.

Reasons for the existence of the screw machine include its ability to produce at an exceedingly rapid rate, in a repetitive cycle, classes of parts having a wide utility and usually within quite close dimensional limits. Comparatively recent and extensive improvements both in the screw machines themselves and in tools especially developed for use in these machines have permitted marked increases in the rate of production. In addition, it is possible to hold the screw-machine product within materially closer limits than were once feasible. Moreover, the modern machine makes possible certain operations once considered impractical. Burnishing is now readily done, and some machines provide extra spindle positions for doing it, thereby reducing the number of secondary operations once required. Modern machines in general require less setting-up time than do older types.

Although the types of parts produced on the screw machine are chiefly those having surfaces of rotation, they are not confined entirely to products having only such surfaces. Some machines are readily adapted for other operations, and all can be fitted with stock or special attachments such as those for slotting, milling, or cross drilling. In other instances, supplementary operations are performed more advantageously in secondary machines better adapted for the purpose.

Importance of Screw-machine Products.—Because of the exceedingly useful character of screw-machine products and of the rapidity with which they are produced, they have gained extensive use in assemblies designed for mass production. The quantities manufactured exceed those for some of the mass-production items dealt with in other chapters of this book and screw-machine products are extensively used in combination with these items and with other metal and related products. Many screw-machine products find a wide sale independent of other products, forming in themselves finished articles of trade. A large number of jobbing shops specialize in manufacturing screw-machine products, and, in addition, a still larger number of manufacturers of other products have their own departments in which screw-machine products are turned out in prodigious quantities.

Reasons for Extensive Use.—Since lathe operations are basic in metalworking and the screw machine is perhaps the fastest and most efficient form of lathe and is capable of operating on a fully automatic cycle, its products have become a basic necessity, not only in the metalworking trade, but in some related fields. The production of the higher grades of screws and bolts alone, many of them necessarily departing from what may be termed "standard" because of special design requirements, constitutes an important business in itself. Added to this is the production of bushings and bearings or bearing parts in great variety; of pins, washers, and special nuts in endless forms; of uncounted special elements for machines and mechanical products; of certain special pipe fittings and the like; of knobs and knurled parts in great profusion; of tubular products with open or closed ends; of dielectric parts from plastics and other similar products; and of literally hundreds of special items for which there is no other economical substitute. Certain of these products can be produced in the same shapes but not necessarily within the same dimensional limits or with equal finish or in the same metals by other means, even in some cases with equal economies. Many bolts, nuts, and headed products are produced, of course, by die forging or cold heading; but, in general, such products lack the dimensional accuracy and finish that is readily secured in the screw machine and the range of metals suitable is more limited. Certain products can be die cast in forms producible on the screw machine and also with great economy, but only in nonferrous metals. As cast, they lack the bright finish readily attained in screw-machine products. Competition between the two types of parts is quite limited. Some swaged parts may compete to a limited extent with those of the screw machine but instances of this are comparatively few. In a broad sense, the screw machine has no effective competitor; it stands in a class by itself.

Types of Screw Machine and Effects on Design.—In a brief chapter on the design of screw-machine products, little can be said about the machines themselves, but the designer of their product should know, at least in a general way, how the machine operates and something as to its capacities, if he is to design the product it makes intelligently and with an eye to maximum economy in production. Hence a brief description of the screw machine follows.

All screw machines have hollow spindles[1] through which the stock is fed or advanced into working position. The stock is gripped by a collet, which locks it endwise and causes it to rotate, usually at the highest speed feasible for the metal employed,

---

[1] Nearly identical with the screw machine, both in principle and often in general construction, is the chucking machine. Sometimes chucking machines are referred to as "screw machines," as they can turn out parts duplicating those of the screw machine. Unlike the screw machines they

the character of machining required, and the types of tools to be used. Stock is fed against a stop which determines the length of the piece unless the outer end is subsequently machined, as it usually is. Two sets of tools are commonly brought into use, those carried by cross slides, of which there are usually two or more, and those mounted on a turret, the latter often carrying several tools for end operations. Cross-slide tools frequently turn (form) the outer diameter, often do some facing operations, and almost always perform the cutoff operation. Turret tools perform all drilling, boring, and other interior operations, including tapping, and often do some facing, external turning, and external threading. In general, both internal and external operations proceed simultaneously and, on some types of machines, modern tools, which avoid interferences once encountered, make it possible to do certain simultaneous operations once considered impractical or impossible. In many cases, however, only one tool can be in use or is required on a given piece at one time.

Since it is an important objective of the machine to produce the pieces as rapidly as conditions permit, it is often an advantage to bring several tools into use at the same time. This accounts in the case of single-spindle machines for the use of two or even three cross slides. It also accounts for employing, for certain types of work, multiple-spindle machines in which at least one cross slide and one turret tool are available in each spindle position. Each type of machine, however, has certain advantages as well as certain limitations, and it is rarely necessary for the designer of the screw-machine product to determine in advance which type of screw machine will be used, except, of course, to make sure that the size of the piece to be produced is within the capacity of the machines available.

Economy in tooling and in production is likely to be promoted by designing the product so that it can be produced by those operations for which the screw machine proper is inherently well adapted. On the other hand, supplementary operations, such as burring, slotting, milling, cross drilling, and the like, are frequently performed with high economy in standard attach-

---

carry at the end of their spindle or spindles a chuck or chucks, which may be mounted on a solid, rather than on a hollow, shaft. Such machines are not intended for bar stock and are commonly used for parts not adapted for feeding through a hollow spindle.—EDITOR.

ments or even by the use of special attachments. By applying attachments, it is often possible to perform certain operations on the cutoff end of the piece, and the screw machine is frequently used effectively as a chucking machine with a magazine feed arranged to insert pieces previously finished on one end into the collet and thereafter to machine them (on the end which was the cutoff end in the earlier operation) economically, just as if they were still a part of the bar or tubular stock used originally. In other cases, secondary operations are more efficiently done in other types of machines that happen to be especially well adapted for the particular operation required.

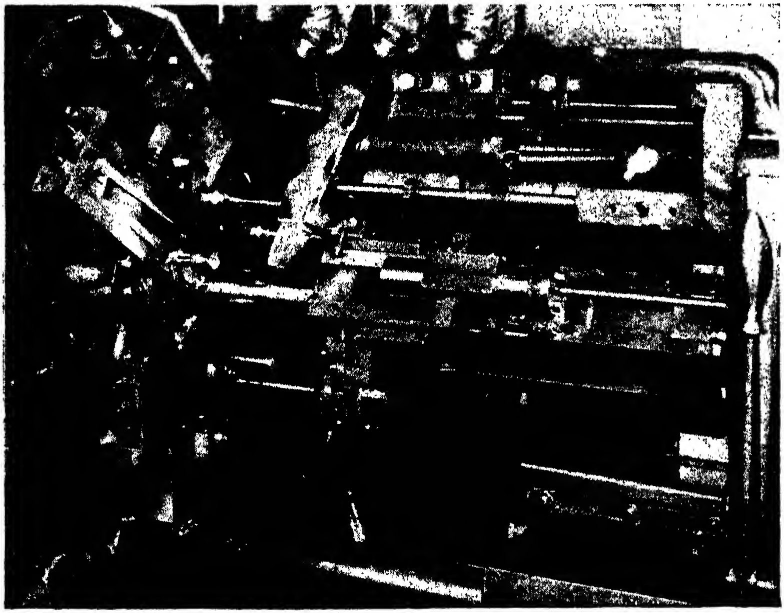

FIG. 1.—Close view, showing a portion of a 1-in. New Britain Gridley six-spindle automatic screw machine. Three of the spindles and three cross-slide tools are seen at the left and, to the right of them, the turret carrying tools that perform end operations.

Although the present upper limit in size for single-spindle screw machines is 8 by 8 in., relatively few such machines are available. A maximum diameter of 2½ in. is close to the limiting size of single-spindle machines in common use and a large proportion of machines of this type are limited to 1 in. diameter and 6 in. length or to smaller sizes. Multiple-spindle machines having a maximum capacity of 5 in. in diameter by 20 in. long have been built but the largest size in common use is designed for handling up to 2⅝- by 6-in. pieces.

Although the minimum diameter and length of work that can be handled is not so well defined (since even a large machine can produce quite small diameters and short pieces), smaller machines are likely to handle small work most economically. Multiple-spindle machines are used chiefly for work above ¼ in. diameter but are becoming available for small work also.

FIG. 2.—**Brown and Sharpe single-spindle automatic screw machine, showing tools in the front and rear cross slides and several in the turret mounted on a horizontal transverse axis to the right of the slides.**

When to Design for Screw-machine Production.—Factors to be considered in determining whether or not a piece can be produced economically on a screw machine include the following:

1. *Shape.*—The piece should have only or chiefly surfaces of rotation.

2. *Material.*—Material should be such as can be machined readily with the speeds and tools available.

3. *Size.*—Naturally, the piece must come within the size limits for the equipment available. In some cases, by special tooling, normal maximum length for a given machine can be

exceeded, but in these cases one should be assured that the machine is not overloaded and that the extra tooling required will be offset, as to cost, by the economies realized as compared with an alternative method of production.

4. *Quantity.*—The quantity of parts required should be such as to warrant any special tooling and the setup time[1] and expense necessary for the job. For quantities of less than 1,000 parts it is seldom economical to use the automatic screw machine, especially if tooling costs are considerable and/or setup time involves considerable expense. For such quantities, comparative costs as against hand screw machine or some other method of production may well be considered.

5. *Dimensional Tolerances.*—Requirements as to dimensional tolerances should either be such as are readily held, or, if closer than can be held readily, should allow for extra cost or some secondary sizing operation (see subsequent paragraph on Tolerances).

6. *Character of Operations.*—If the piece requires one or more operations not readily performed on the screw machine, due allowance should be made for any necessary secondary operations.

Visualizing the Screw-machine Product.—In the design of screw-machine products (as, indeed with all parts intended for quantity production), the designer can profit by trying to visualize precisely what operations are required to produce each surface thereon. Since the screw machine is adapted especially for producing surfaces of rotation concentric with the axis, departures from such surfaces should be avoided (1) unless the cost of the extra operations required is justified or (2) unless some readily available shape of stock other than a bar or tube of circular section can be used to provide the noncircular portion. Secondary or supplementary operations do not always increase costs as compared with equivalent operations in the screw machine, but they are likely to do so. If they do, the extra costs should be justified and allowances for them should be made. Anything that tends to decrease the number and the duration of the respective operations, especially the duration of the longest operation, can usually be counted upon to reduce

---

[1] Average setup time for multiple-spindle machines ranges, as a rule, from about 4 to about 8 hr., the shorter time applying to latest types of machines. For the single-spindle machine, the corresponding average time is about 2½ hr.

cost. Under subsequent headings there are additional recommendations as to what to do and to avoid doing to minimize costs. There often are other considerations which require that costs be subordinated, but, when this is not the case, the desirability of following cost-saving recommendations should not be overlooked.

Consulting the Producer Desirable.—The expediency of consulting with a producer of screw-machine products when laying down a design of such a product is at least as great as it is in the design of other products for quantity production. Those who continually live with the problems that enter into such production naturally know best how these problems can be solved or avoided and cost kept at a minimum, consistent with other results required.

General Rules for Design.—It is not feasible to lay down any hard and fast rules for the design of screw-machine products or even any general rules to which exceptions may not be required, but useful rules can be formulated with the proviso that exceptions or qualifications may often be necessary. If such rules as are here given are followed, production on the screw machine will be facilitated and cost lowered. These rules may well be kept in mind when preparing a design and will serve to aid in checking a given design before it is released for production to make sure that economies that might be realized have not escaped attention. Reasons for the rules will become apparent in most instances when the foregoing paragraphs or those following these rules are studied.

Rule 1. See that all or as many as possible of the surfaces to be machined are surfaces of rotation.

Rule 2. Limit machining to those surfaces where it is definitely required or is advantageous.

Rule 3. Design so that machining is limited to the minimum depth and length of cuts required.

Rule 4. Design the piece so that the smallest suitable diameter of stock that is readily available can be used and so that over-all length is minimized.

Rule 5. Select material that, consistent with minimum cost and with other requirements, machines most readily.

Rule 6. Never impose dimensional limits that are closer than is essential to meet requirements.

Rule 7. Design the piece so that the number and duration of machining operations required are minimized.

Rule 8. Where feasible, design external surfaces so that they can be machined readily with a single forming tool or with rough and finish forming tools or by a rapid turning operation.

Rule 9. Design the piece so that it can be machined with a minimum number of tools and with standard tools unless special ones will effect economies.

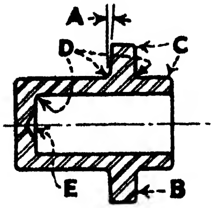

FIG. 3.—Sketch of flanged bushing. The angle *A*, which the rear face of the flange makes with a plane normal to the axis, is preferably not less than 3 deg. If face *B* must be square with axis, so indicate on drawing. If corners, as at *C*, must be broken to avoid burrs, so indicate on drawing. A small radius or chamfer, as at points *D*, helps to lower costs as does also allowance of a spot relief at *E*, as left by a standard drill used in boring the hole.

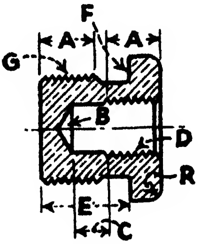

FIG. 4.—The length of full thread, whether internal or external, as at *A*, should always be indicated. A hole, formed by a standard drill, which leaves a conical recess at *B*, is cheaper than one with a flat (square) bottom. Tap clearance *C* equal to the length of three threads minimum for bottoming taps and five threads minimum for other taps should always be allowed, and the percentage of full thread required, *D* (usually 75 per cent maximum), should be indicated on drawing. The length of radius *R* if required at a corner should be indicated (usually 0.005 in. minimum), but tooling may cost less if the edge is chamfered, especially when, if a radius is specified, close limits on the radius must be maintained.

Rule 10. Avoid square external shoulders, and, where they are required, so indicate definitely on the drawing (Figs. 3 and 4).

Rule 11. Avoid square-bottom holes when a hole made with a standard drill will meet requirements (Fig. 4).

Rule 12. When a square-bottom hole is required, the bottom preferably should be relieved at the center or have a conical spot as left by a standard drill and outside corners should be chamfered or have a radius (Fig. 3).

Rule 13. See that blind holes to be threaded provide adequate clearance for the ends of taps (Fig. 4).

Rule 14. See that drawings are marked to show the length of full threads and the percentage of full depth of tapped threads required (Fig. 4).

Rule 15. Do not specify that threads come closer than 2½[1] full threads to shoulders or to hole bottoms (Figs. 4 and 5).

Rule 16. Threads tapped close to the bottom of a blind hole or to a counterbore shoulder should provide a radial recess about 2½ threads minimum in length at the end of the thread (Fig. 5).

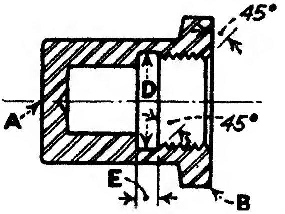

FIG. 5.—Chamfers of about 45 deg. are desirable at both ends of threads tapped to a shoulder or close to the bottom of a hole. The diameter of the recess *D* should be at least 0.010 in. larger than the crest diameter of the tap and the width of the recess *E* should equal the length of at least three threads. If burrs must be removed at *A* and *B*, the drawing should be so marked.

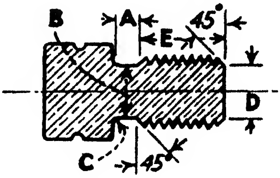

FIG. 6.—When threading to a shoulder, a recess having a width *A* usually at least 2½ threads and a diameter *B* about 0.010 in. smaller than the root of the thread is desirable, as are also 45-deg. chamfers at both ends of the thread. The length of full thread, *E*, should always be indicated, as well as the pitch and form of thread and class of fit necessary. At least a small radius should be provided at *C*, where the recess and shoulder join, and the shoulder preferably should make an angle of 1 to 3 deg. minimum with the plane normal to the axis.

Rule 17. Avoid specifying a thread requiring the use of a bottoming tap unless essential; if essential a recess at end of threads should be provided (Fig. 5).

Rule 18. Allow for breaking or chamfering external corners, of, if required square, so indicate definitely on the drawing (Fig. 3).

Rule 19. Unless removal of burrs is necessary, do not so stipulate; if essential, indicate specifically where removal is necessary (Figs. 3 and 5).

Rule 20. Do not specify a finish smoother than that normally left by the tools commonly used unless definitely required, in which case indicate the character of extra cuts and the type of

---

[1] Considered desirable commercial practice. For exceptions, see below, under Threads.

tool and where to be used or submit a sample to indicate character of finish necessary.

Rule 21. Design for minimum tooling costs consistent with economical production and with other results required.

Rule 22. Design so that as many as possible of the surfaces which require machining, of a type such as is readily done in the screw machine, can be finished before the piece is cut off.

Rule 23. If the piece is one normally exposed to view, make sure that its appearance is as pleasing as due economy in production permits.

Although many of these rules may appear more or less self-evident, examination of the general run of screw-machine-product drawings show that many are overlooked, often, of course, without the designer's being aware that possible economies have been passed up. Other rules may seem less apparent or perhaps not justified until a closer study of conditions surrounding the production of the part is made.

The more familiar the designer of the product becomes with methods used in its production, the better equipped he is to design it so that its cost of production will be the lowest consistent with meeting other requirements. The rules given are not all-inclusive and compliance with certain of them will result in certain others being fulfilled automatically. This indicates a degree of duplication, but if rules are too general in character they are less likely to be understood and observed.

Materials for Screw-machine Products.—Proper selection of material, consistent, of course, with service requirements, has a great deal to do with the cost of the piece. Of particular importance from the standpoint of the manufacturer of screw-machine products is the relative ease of machining, because the faster and more readily the material machines, the more rapidly it can be turned into finished pieces and the less down time is necessary for sharpening tools. The least expensive materials (per pound) are certain of the low-carbon steels and some of these, especially S.A.E. 1112 and X1112, rank as the freest cutting ferrous screw stocks.[1] These and other steels suitable for screw-machine work are commonly used in the cold-drawn form, as this drawing not only improves physical properties but also makes for freer

---

[1] See footnote* to Table I.

machining. Table I gives the type, S.A.E. number, and certain significant physical properties of representative cold-drawn steels used for screw-machine parts and shows their relative machining speed as compared with S.A.E. 1112. S.A.E. X1112 is rated as the freest[1] cutting and has about the same physical properties as S.A.E. 1112 but a higher sulphur content (0.20 to 0.30 as against 0.10 to 0.20 for S.A.E. 1112), the higher sulphur accounting for freer machining.

In some cases, at least, increased hardness of steel results in better machining properties. Some consider steels having a large grain size to be superior from a machining standpoint. It is highly desirable, in order to promote ease of production by screw machines, to select a material such that chips break up as they come from the tools. This facilitates chip disposal and avoids many troubles that result if long, tough, or stringy chips are produced.

Among the nonferrous materials, free-cutting brass such as S.A.E. 72 is most widely used. This alloy contains 60.00 to 63.00 per cent copper, 2.50 to 3.75 per cent lead, iron 0.15 per cent max., other impurities 0.50 per cent max., remainder zinc. This brass can be cut as a rule at speeds as high as the modern high-speed screw machine is designed to run and is well adapted for a wide range of parts. Other alloys of copper, including the wrought bronzes and aluminum alloys listed in Table II, are well adapted for screw-machine work, but few of them machine as freely as S.A.E. 72 brass, although most of them cut more freely than free-cutting steel.

Since both material cost and ease of machining have an important bearing upon the cost per piece, it does not follow, of necessity, that the lowest cost material will give the lowest piece cost. Especially in small parts, where material cost per piece is small regardless of the material chosen, brass is often selected, despite its higher cost per pound than steel, because it machines so freely. In addition, brass scrap commands a relatively high price, whereas in proportion that for steel scrap is low. Scrap from nonferrous metals often has sufficient value to pay for machining costs on the piece.

In the case of ferrous metals, especially the cheaper grades, the cost of tubes is often so much higher than that of bar stock

---

[1] See footnote* to Table I.

TABLE I.—RELATIVE MACHINING AND OTHER PROPERTIES OF VARIOUS CLASSES OF STEEL SUITED FOR USE IN SCREW-MACHINE PRODUCTS*

Designation, S.A.E. No. or trade name	Surface cutting speed, ft. per min.	Per cent relative cutting speed, S.A.E. 1112 = 100%	Tensile strength, thousands of psi	Yield point, thousands of psi	Elongation, % in 2 in.	Reduction of area, %	Brinell hardness
Free-cutting Steels							
X1112	225	136	80–100	70–80	10–20	40–50	170–202
1112	165	100	80–95	70–80	10–20	40–50	170–202
1115	135	81	70–80	60–70	15–25	45–55	140–170
X1314	140	85	75–85	60–70	15–25	45–55	143–170
X1315	140	85					
X1335	120	72	100–120	85–100	10–15	30–45	187–235
Maxcut†	246	149	83	78	13.5	40	187
Multicut†	275	167	75	72	14	47	160
Carbon Steels							
1015	120	72	70–85	60–70	15–25	45–55	149–170
X1015	130	78	75–90	65–75	15–25	50–55	170–187
1035	115	70	90–110	75–90	10–20	40–50	170–202
1045	95	57	85–115	80–100	10–15	30–45	183–228
1050	90	54	100–120	85–100	10–15	30–45	202–235
Nickel Steels							
2315	110	66	80–100	60–80	15–25	50–60	170–196
2320	110	66	85–100	70–90	15–25	50–60	179–217
2330 Annealed	115	70	95–100	85–100	15–20	40–55	182–212
2335 Annealed	115	70	100–115	90–100	15–20	40–50	187–235
2345 Annealed	85	51	110–125	95–110	10–15	35–45	207–235
Nickel-chromium Steels							
3115	110	66	85–100	70–80	12–20	50–60	179–196
3120	110	66	85–105	80–95	12–20	40–50	187–212
3130 Annealed	120	72	90–105	80–95	15–20	50–60	183–228
3135 Annealed	115	70	90–105	80–95	15–20	45–55	183–228
3140 Annealed	110	66	95–110	90–100	12–18	40–50	196–228
Molybdenum Steels							
4130 Annealed	120	72	95–110	85–100	15–20	45–55	187–217
4140 Annealed	110	66	100–115	90–100	15–25	40–55	196–228
4615	110	66	90–105	80–95	15–20	45–60	183–212
Chromium Steels							
5120	100	60	90–105	80–95	12–20	50–60	170–196
5140 Annealed	115	70	95–110	85–100	12–18	35–45	187–228
5150 Annealed	100	60	100–115	90–100	15–25	35–45	187–228
52100 Annealed	65	40	100–115	70–85	15–25	50–60	196–241
Chromium-vanadium Steels							
6120	100	60	100–115	80–100	12–20	45–60	187–228
6130 Annealed	120	72	95–110	85–100	15–20	45–55	179–207
6140 Annealed	115	70	100–115	90–105	12–18	40–55	183–228
6150 Annealed	100	60	100–115	90–105	12–18	35–45	196–228
Stainless Steels							
Enduro 18–8‡	75	45	80–90	35–45	60–65	65–55	135–185
Enduro AA‡	90	54	75–90	45–55	30–20	55–40	145–185
Enduro SI‡	90	54	65–85	35–45	35–25	65–60	135–165
Enduro 18–8 FM	100	60	80–90	35–45	60–50	70–55	130–150
Enduro FC	150	91	70–85	40–50	35–25	65–60	145–185

* Speeds given are approximate averages for general run of parts and (together with physical properties) are taken from data furnished by Union Drawn Steel Division, Republic Steel Corporation. The figures apply to cold-drawn grades suitable for screw-machine products.

† Maxcut and Multicut are the trade names of Union Drawn steels developed especially to gain free-machining properties as well as to overcome certain drawbacks of the Uma-treated lead-bearing steels which, although developed for the same purpose, have not proved entirely satisfactory. Maxcut is a free-machining, high sulphur (0.350 to 0.500) Bessemer steel, but otherwise similar to S.A.E. 1112. Multicut is a low-carbon, free-machining open-hearth steel having physicals similar to S.A.E. 1115. (It contains 0.05 to 0.15 carbon, 0.70 to 1.00 manganese, 0.06 max. phosphorus, and 0.31 to 0.45 sulphur.) Neither steel contains lead and both are said to owe their free-machining properties in part to special methods of manufacture. These steels carry a small premium over standard or regular grades, similar to that prevailing for lead-bearing steels.

‡ Annealed and cold drawn.

TABLE II.—RELATIVE MACHINING AND OTHER PROPERTIES OF WROUGHT BRASSES, BRONZES, AND OTHER NONFERROUS MATERIALS SUITED FOR SCREW-MACHINE PRODUCTS

Designation	Relative machinability, free-machining brass = 100 (see note below)	Approximate composition, %					Approximate tensile strength,* thousands of psi	Approximate yield point,* thousands of psi	Approximate elongation* % in 2 in.	Cutting speed, %	Rate of tool feed, %
		Copper	Zinc	Tin	Lead	Other				S.A.E. 1112 steel = 100	
Leaded Brasses											
Free-cutting brass, S.A.E. 72	100	61 0	36.	..	3 0		45	21	40	300	150-200
Hardware bronze	...	85.0	13 25	.	1 75	.	40	16	42		
Leaded commercial bronze	90	89 0	8.0	.	2 0	1 Ni	38	16	35		
Free-cutting tube	70	65 5	32 75	...	1.75	.	45		40		
Bearing brass, free-cutting	100	67 0	29.	...	4 0						
Engraver's brass	90	63 5	34.	.	2.0						
Free-cutting brass	100	62.0	34 75	...	3 25		47	27	60		
Architectural bronze	90	58.0	39.0		3 00			.	20		
Leaded naval brass	70	60.0	37 75	0.75	1 5	.	55		45		
Red brass S.A.E.40	...	85.0	5.0	5.0	5 0		.			250	150
Other Brasses and Bronzes											
Naval brass (Tobin bronze) S.A E. 73	30	60 0	39.25	0 75			54	24	25-50	100	100
Everdur 1012	60	95 6	...	. .	0.40	1 Mn 3 Si					
Phosphor bronze S.A.E. 64	...	80.0	...	10.0	10.0	.	.			70†	75†
Free-cutting phosphor bronze	100	87.55	4 0	4 0	4.0	0 45 P					
10 % nickel—silver	20	65.0	25.0	.	..	10 Ni	55	70	42		
12.5 % leaded nickel-silver	60	61 0	25 0	..	1 5	12 5 Ni					
18 % leaded nickel-silver	50	63 25	17.75	...	1 0	18 Ni					
Free-cutting bushing bronze	100	88.0	4.0	4.0	4.0						
Silicon bronze	.	...	...	..	.....	.	.	.	...	150	100
Other Nonferrous Materials											
Pure copper	20	99 9+	..	.		.	32	10	35-45	125	150
Aluminum 17 S.T.‡	...	‡2 5	...	..			43‡	24	27	300	150-200

---

* These properties apply to soft grades.

† Tungsten carbide tools.

‡ Aluminum Company of America designation. Besides copper content, this material contains 0.3 per cent magnesium, balance aluminum. Physical properties in this case apply to heat-treated material.

NOTE: Data on relative machinability are as supplied by makers of brass and other copper-base alloys and are based on free-machining brass as 100. As the limiting cutting speed on free-cutting brass is not definitely known, however, the basis of comparison is open to question. It is probable that the data given are indicative of the order of merit in respect to ease of machining or that the data can be considered qualitatative in character if not strictly quantitative.—Editor.

that the latter may prove more economical, even for the production of hollow parts. The extra machining necessary for removing metal from the center of the bar may be more than offset by lower material cost per pound for the bar as compared with the tube. For this reason, hollow parts that could be produced from tubing are often made from bar stock, especially when the outside diameter is not large and free-cutting low-carbon stock can be used. As size increases, and particularly when the more expensive alloy steels are specified or when the walls of the piece are relatively thin, the saving in material and in machining may dictate the use of tubular stock. This is the case, for example, in making many ball-bearing races, especially those of larger diameter.

In the case of nonferrous metals, especially those which are available in extruded form and in which the cost differential per pound as between bar stock and tubing is not great, the use of tubing, even in moderate to fairly small sizes may result, when hollow parts are required, in economies upon which the designer may count. When questions in this regard arise, they may well be discussed with the producer of the screw-machine product.[1] In no case should a design be predicated upon the use of tubing having a wall so thin that it will be appreciably and permanently deformed by the pressure of the feed fingers or by the collets that grip it in the screw machine.

Parts that require a square, hex, or other polygonal shapes are often produced from bars or tubes having this shape, but of course the polygonal portion must come at the maximum diameter of the piece, as otherwise the faces of the polygon must be machined, usually in a secondary operation. Parts, such as the jaws for drill chucks, which have a section the shape of a circular sector and which, when placed together in proper number, form a complete circular bar or a thick-walled tube can be machined, as a bar or tube of circular section would be, by feeding them into the screw machine in groups forming, in effect, a bar or tube.

Extruded or drawn shapes or tubes of odd contour, especially those which are symmetrical about the axis, are sometimes used

---

[1] Experience indicates that extruded brass tube is sometimes coated with a scale, which makes it harder to machine than free-cutting brass rod. This may tend to offset in some degree the potential economy in using extruded tubes in preference to free-cutting brass rod, especially in small diameters.

to advantage for screw-machine products requiring a corresponding contour, such as a splined or deeply serrated contour, for example. In such cases, however, the designer should make sure that the shape required is available and at such a price that the finished part will be more economical when produced from it than if produced in some other stock that afterward has the contour shaped by secondary operations.

Materials for screw-machine products should be selected, of course, not only with due regard to physical properties, ease of machining, and low cost, but with assurance that the desired finish can be given the piece. Not all materials can be finished with equal smoothness, at least not with the same number or character of operations or at the same cost. Some considerations in this regard are mentioned under Finish.

Shapes of Parts and Their Effect on Cost.—The simplest forms of parts produced by the screw machine are naturally those which require fewest and shortest machining operations. Thus, a piece that is merely cut off from a bar or tube, with a standard tool (which, if desired, will simultaneously chamfer the edge at one end) requiring only a single operation, is the simplest and cheapest product. Every added operation adds something, though often only a very small amount, to cost, including setup time. Even a light cut on a diameter already sufficiently true and smooth to meet requirements adds slightly to cost. If the objective is minimum cost, it is also best to aim at minimum removal of metal, that is, cuts required should be of minimum depth and length. The ligher the cut, the faster it can be completed.

Turning by using a tool that moves toward the axis (rather than parallel to the axis) of the piece, is commonly called "forming." It usually costs least when performed by a single tool, such as a forming tool, which often shapes the entire outside diameter (Fig. 4), or by a pair of such tools, one for roughing and one for finishing. The width of such tools, however, seldom can exceed three times the minimum diameter of the piece unless a roller support, equivalent to a steady rest, can be used, in which case much wider tools are possible. If cuts are deep, narrower tools may be needed. If the piece is long in reference to its diameter, so that it is likely to be materially deflected by a tool in the cross slide, and a roller support is not possible, the effect of deflection must be considered in reference to dimensional tolerances, or a box tool, having a roller support for the work or balanced cutters 180 deg. apart must be fed in from the end, tending to increase the time for the operation. Such expedients are frequently employed and are thoroughly practical, but when they can be avoided cost may be lowered somewhat.

A perfectly straight-edged forming tool is the cheapest, but, once the forming tool is made, it will cut an irregular shape almost if not fully as fast as a straight face. A large proportion of forming tools are made to cut shoulders and chamfers or to form special shapes, which they do rapidly and at low cost (Fig. 19*A*).

Drilling is the simplest and usually the first end operation unless it is preceded, as it sometimes is, by a very simple and perhaps less expensive conical spotting to form a center (Fig. 19*A*). Drills, of course, are often made with a stepped diameter for counterboring or for chamfering the hole or both without materially increasing the cost of the cut (Fig. 19*A*). Depth should be minimized for lowest cost and the bottom of the hole should preferably be conical, as made by a standard drill (Fig. 4). If the hole is deep, the time for drilling is correspondingly increased, and, if it requires much more time than a simultaneous external operation, it may be economical to drill the inner portion of the hole in a later operation, that is, in two or more spindle positions, considering multiple-spindle machines. This adds to tooling cost but may reduce total cost by shortening the time of the machining cycle.

Although the use of a drill as small as meets requirements from a design standpoint results in removal of a minimum of metal and is economical from that standpoint, too small a drill may require the use of a drill speeder[1] and/or result in greater drill breakage, perhaps offsetting any economy. Reaming can be done rapidly but is, of course, an extra operation and requires an extra tool (Fig. 19*C*). Tapping, though readily performed, usually is a relatively slow operation; hence the depth of thread formed by the tap should not exceed minimum requirements. In some cases, tapping requires recessing at the inner end of the hole (Fig. 5), making it necessary to use an extra tool in prepar-

---

[1] An attachment for rotating the drill in a direction opposite to that of the screw-machine spindle.

ing the hole and to give this tool a compound motion. This is entirely feasible but increases tooling costs.

All these items may appear to concern the producer rather than the designer, but in reality they require consideration by both and must be given due attention by the designer if, again, his objective is minimum cost, so often essential. They make it clear that, when the designer seeks minimum cost, as he usually must do, he should acquaint himself as fully as possible with details of production and seek to avoid designs that needlessly increase cost.

Minimizing Material Costs.—Certain facts relating to minimizing of material costs are given under Materials for Screw-machine Products, above. The need for selecting the lowest cost material that will meet other requirements and not unnecessarily increase machining costs may appear self-evident, yet it is sometimes overlooked. The same may be said of selecting the smallest size of stock that will give required results. It involves needless waste to make a part, say $1/64$ in. above some standard and readily available size when it can just as well be made from that size or a few thousandths of an inch under it and serve the same purpose. Although, when large quantities are required, almost any size of stock can be secured on order without paying a premium, delays may be encountered, so that, unless cost can be lowered by ordering a special size of stock, it is best to base designs on the use of standard sizes.

Savings sometimes made possible by using tubing instead of solid stock under certain conditions have been outlined above. For large hollow parts, especially those with relatively thin walls, considerable savings may result from using tubing, and the higher the cost of the material per pound, the greater the saving may be.

Polygonal stocks may increase waste to some extent, especially if a cylindrical stock having a diameter equal to or less than that across flats can be used and still meet requirements, but, if it is necessary to machine flats, the cost of the extra operations involved should be weighed against any saving in stock that will result. Somewhat the same may apply to special extruded shapes. Their use should be avoided unless they result in economies over an alternative method of securing the same result.

Parts having an outward flange much larger than the shank or body of the piece result in considerable waste of stock and require deep cuts in machining. Conditions sometimes justify their use, but the diameter of the flange should be held to a minimum. When a wrought metal is required and a considerable difference as between flange and stem diameter is necessary, as in a poppet valve, for example, it may cost less to use an upset forging or to produce the flange and stem separately in screw-machine operations and to weld the two pieces together subsequently.

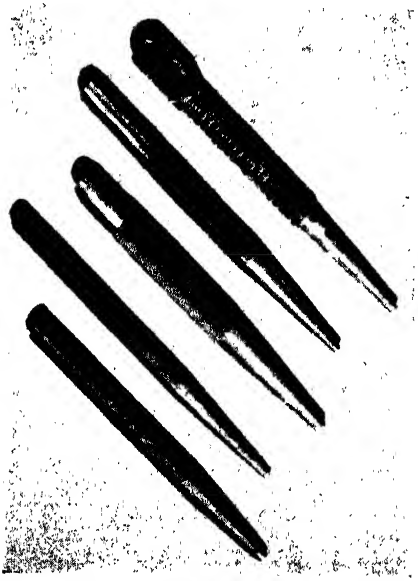

FIG. 7.—Punches or nail sets produced in the screw machine, the chief differences in design being in knurling and other factors affecting appearance. Actual differences in cost are small, but the better looking products command a much higher price, largely because of improved appearance.

Appearance Factors.—When a screw-machine product is to be used in a location exposed to view or may depend in part upon appearance to promote its sale, due care should be used to see that it is well proportioned and that details of design which improve appearance are not overlooked or are incorporated when their cost is not excessive. Such simple parts as the punches or nail sets shown in Fig. 7 illustrate the point. All the punches serve the same purpose, but that made from an unfinished round bar looks cheap and unattractive. The others look better and command a higher price, quite out of proportion to their slightly increased cost.

Good design from an aesthetic standpoint calls for simple lines as well as for designing the piece to serve its function and to look its part. Simple forms of decoration may serve well to break up surfaces that may be regarded as uninteresting otherwise, but decoration that is applied only as such, without performing some useful function, is not considered good design from an artistic standpoint. Engineers should make sure, of course, that the part will serve its function acceptably (as to strength, stiffness, and other purely engineering considerations) but if they lack the ability to make it look right, as some engineers do, the services of a qualified artist or stylist may well be secured to see that appearance comes up to required standards of excellence. This may even mean the difference between a ready and a poor sale for the product.

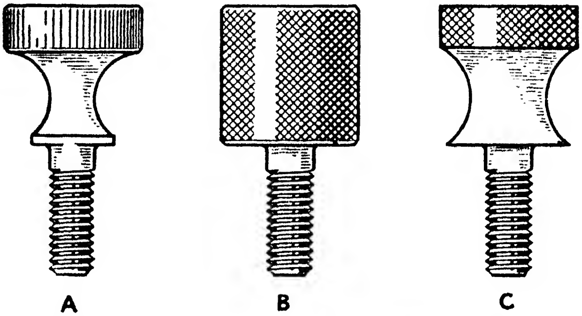

FIG. 8.—Sketch showing the effect of small changes in design on the appearance of thumb screws for the same purpose, as produced in the automatic screw machine. Design *A* is best in appearance by reason of contour and use of a straight knurl. Design *B*, although it may reduce cost slightly, looks clumsy. Design *C* is both awkward in appearance and unsatisfactory because there are no chamfers at the edges of the knurled portion and no land is left at the outer edge of shoulder, where a burr will be formed.

Knurling, beads, circumferential recesses, and the like, as well as chamfers, rounded edges, and fillets, are among the expedients that can be used in efforts to improve appearance. The knurled circumferential surface of a thumb screw may improve its appearance as well as serve a useful function (make it easy to grip securely), but the edge of the knurl should be chamfered both for better appearance and to avoid sharp burrs. Such a screw would look awkward if knurled over its whole turned surface,

(Fig. 8) but, if necked with a proper radius and given a narrow cylindrical land next to its seat, it looks the part, yet costs little more. Such details may seem self-evident or of little consequence, but in fact they often constitute the difference between good or acceptable and poor and unacceptable designs, as far as appearance is concerned. Figure 9 shows hollow-ware parts produced in the screw machine, in which well-designed contours are important as affecting appearance.

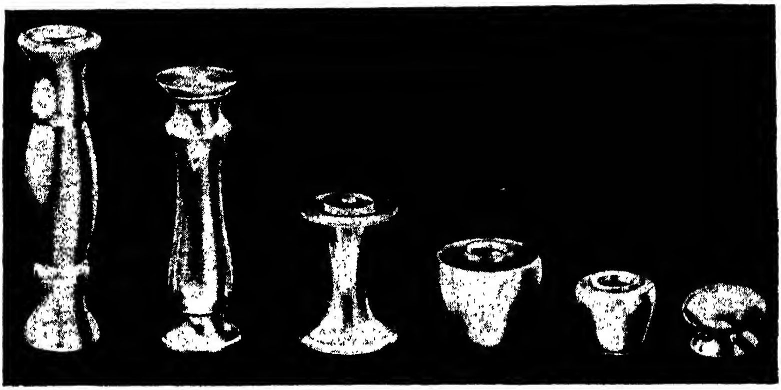

FIG. 9.—These parts, produced from free-cutting nickel-silver on the screw machine for use with hollow ware, illustrate the pleasing effect of well-proportioned contours on appearance.

Tolerances.—With the modern highly developed and sturdily built screw machine, it is possible to hold closer tolerances than were regarded as feasible even ten years ago. It does *not* follow, however, that close tolerances should be demanded when not essential. To do so usually involves needless expense and gains nothing. It is likely to add to cost, for example, to insist upon tolerances closer than can be held in the mating part or to specify them close when the part makes no fits with anything.[1] Tolerances in screw-machine products depend upon the use of a well-built machine that is kept in good condition; upon the kind of tools and how sharp they are kept; upon the depth and speed of cut, in some cases; upon the diameter and length of piece; and upon like considerations. Not all of these can be controlled by the producer, and some of those which can be controlled involve

[1] An exception would be when some surface has to be held within close limits merely to locate the piece properly in some secondary operation.

costs that may or may not be warranted by the requirements. The safest rule is to follow general commercial practice as to tolerances insofar as it meets actual requirements to do so. When closer tolerances are essential, the drawing should be specific in this regard, and, if it adds to cost to hold the closer tolerances, an allowance for this should be expected. Tools for holding close tolerances may cost more and there is apt to be less production per machine because of increased down time for sharpening and resetting tools, extra gaging, and the like.

Commercial practice calls for holding, when no definite limits are given, ±0.002 to 0.005 in. on diameters marked in decimals. Lengths from shoulders to other points are commonly held within ±0.003 in. Practice on fractional dimensions is to work within ±0.005 in. on machined diameters and ±0.010 in. on lengths. Naturally, much closer dimensions than these can be held where specified. Thus, diameters are often held within ±0.001 or even 0.0005 in. limits, and lengths within the same limits, but to do this requires extra care and extra expense.

When eccentricity limits must be held, they should be clearly specified on the drawing as between definite surfaces. It is best to specify total runout on a dial gage, which measurement, of course, is twice the actual eccentricity. The commercial allowance for runout as between bores and turned diameters usually is 0.005 in. Runout as close as 0.0005 in. can be held, if required under some exceptional conditions, but, when dimensions as close as this cannot be held, it is usually better to provide for grinding in a secondary operation. The deeper the hole, the larger the runout is likely to be.

When tapered surfaces are required, the drawing should show clearly either the angle which the surface makes with the axis of the piece (Fig. 10) or the diameters at each end of the tapered surface (Fig. 11). When the angle is indicated in degrees without a tolerance, it is usual to hold ±1 deg., but closer limits can be held when required. Whenever feasible, it is better to use a known American taper (such as Morse or Brown and Sharpe) than an odd taper. Surfaces intended to be true cylinders may have a very slight taper either way, but the actual diameter should come within the limits specified, or within commercial limits when not specified, *at any point on the surface.* On slender parts that are long in comparison to the diameter, a slight spring-ing of the piece under tool pressure may cause it to be slightly larger at the free end than at the supported end, resulting in a slight back taper. When even a slight taper must be avoided, the drawing should indicate where and give the specific limits to be held.

In thread specifications, the pitch diameter and number of threads as well as the precise length of full thread should be given, of course, and also the class of fit in accordance with National Screw Thread Commission standards. These standards contemplate the use of the "U.S." or "National" form of thread, as it is variously termed. It is common practice to work to class 2 fits on both male and female threads, but class 3 fits often can be held, when essential, although they are likely to involve extra cost. If any other form of thread than the above-mentioned standard is required, the drawing should state this clearly and give all essential dimensions with the limits required thereon, and a drawing showing a ten-to-one enlargement of the thread profile should be furnished.

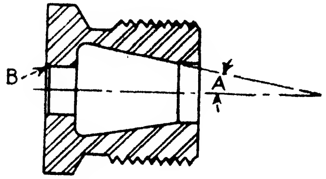

FIG. 10.—A part of this type can be produced on an automatic screw machine but requires special tooling to form the tapered interior surface. The drawing should show, among other things, the angle *A*, which the tapered surface makes with the axis, and the chamfer *B*, if the burr thrown into the hole by the cutoff operation must be removed.

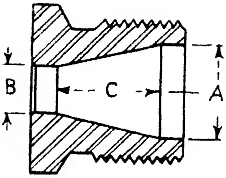

FIG. 11.—This part is easier to produce than that in Fig. 10, because the large end of the taper is outward and not back of a shoulder. The amount of taper is indicated in this case by giving the diameters *A* and *B* at each end thereof and by indicating the length *C*.

In all cases in which dimensional tolerances closer than those common in commercial practice must be held, limits should be clearly stated, and, if there is doubt as to ability to hold them, the matter should be discussed with the supplier and an agreement reached as to the practice to be followed. If secondary operations, such as grinding or lapping, are required, suitable allowances for them should be made and the drawing marked accordingly.

External Threads.—External threads on screw-machine products usually are produced by adjustable self-opening or adjustable or solid dies, but they are often produced with single-point tools. They can be rolled under favorable conditions either in the machine or subsequently in secondary operations. If the thread is back of a shoulder larger than the root diameter of the thread, it must either be cut with a single-point tool or be rolled, unless produced in a secondary operation. There is little to choose between the two types of thread but some contend that the rolled type is not so strong as the cut thread,[1] although the rolled type is likely to be smoother and free from fine burrs. Nevertheless, cut threads in general are sufficiently free from burrs to meet most requirements. Cost differences between rolled and cut threads produced on the screw machine itself are usually small but sometimes slightly favor the rolled thread on free-cutting nonferrous material and sometimes on free-cutting steel. It is not usually considered feasible to roll threads on the screw machine in other materials.

When minimum cost is sought, the method of thread production may well be discussed with the producer, both as to tooling and as to effect on piece cost. Since threading dies in general are adjustable, whereas taps are not, as a rule, it is usually easier to hold closer fits on external than on internal threads, but either can be produced with class 2 or class 3 fits, except that some materials are too hard for satisfactory production of class 3 fits. Commercial practice usually calls for class 2 fits, with the probability that class 3 fits will increase costs.

Drawings should indicate definitely the length of full thread required (Figs. 4 and 6). When threading to a shoulder, the thread should not, as a rule,[2] come closer than 2½ threads from the shoulder. It is good practice to turn the diameter between the end of the thread and the shoulder about 0.010 in. smaller than the root diameter and to chamfer the edge at the end of the thread at a 35- to 45-deg. angle (Fig. 6). A similar chamfer

---

[1] Other authorities are of the opinion that rolled threads are stronger as well as smoother than cut threads, and rolled threads, some even meeting class 3 requirements, are being widely used. See subsequent chapters on headed products.—Editor.

[2] This is usual commercial practice but, especially on single-spindle machines, some threads come within 1½ threads or even closer to shoulders.

at the beginning of the thread is necessary to avoid a burr (see Fig. 6). The inner diameter of chamfers should be at least 0.015 to 0.020 in. smaller than the root diameter of the thread.

Threads requiring multiple starts can be produced when required, but they add to tooling costs because special tools (chasers) are needed. Taper threads are readily produced but cost slightly more than straight threads.

Internal Threads.—Screw-machine products are often required with tapped threads. These threads are usually produced with standard solid taps, but if the hole is at least ½ in. diameter, collapsible taps are sometimes used to advantage. Tap drills and taps to give 75 per cent of full thread depth are commonly employed. Threads should be of minimum length to meet requirements and the length of full thread should be indicated on the drawing (Fig. 4). If the hole to be tapped is to be blind, but without a square bottom or shoulder, it can be produced with a standard drill but must be of sufficient depth to allow chip space and clearance for the end of a standard (not a bottoming) tap, say, a minimum of 5 threads beyond the straight tapped portion (Fig. 4). Through holes are preferred for tapping unless this requires a hole of excessive depth, which would take too long to drill.

Threads that must be tapped in a hole with a shoulder or with a square bottom should not be required to come closer to the shoulder or bottom than 3 full threads. In such cases, the hole should be recessed and preferably chamfered at 35 to 45 deg. at the inner end, back of the threaded portion, the diameter of the recess being at least 0.010 in. larger than the root diameter of the thread (crest diameter of the tap; (Fig. 5). A 35- to 45-deg. chamfer (the outer diameter of which should be at least 0.015 to 0.020 in. larger than the crest diameter of the tap) at the start of the hole is desirable to facilitate centering and entry of the tap and also to avoid a burr. A bottoming tap has to be used, of course, in tapping to a shoulder or square-end hole (Fig. 5).

Fits are somewhat more difficult to hold on tapped than on external threads, especially when they must be produced with small solid taps, but class 2 fits are commercially held and class 3 fits can be held, usually at extra cost, if the material is one which taps freely.

Shoulders.—It is possible to make shoulders on external diameters perfectly square or even to undercut them, but they should not be so specified unless definitely required, in which case the drawing should be so marked (Fig. 3). This is partly because one or more extra operations usually are required to make a square shoulder, especially on steel. Wherever feasible, external diameters are turned with forming tools, which are ground initially, of course, to produce the required shape. If the tool must form a shoulder, it must be given side clearance similar to a facing tool and if the shoulder is square, the forming tool, if used, must have its side face relieved and still may drag. Even when so ground, the tool will not face the shoulder smooth. In consequence, the producer of screw-machine products prefers to have the face make a minimum angle of 1 deg. (89 deg. with the axis), if the face of the shoulder is narrow or of 3 deg. minimum if it is a wide face (Fig. 3), as this permits the use of a forming tool with adequate clearance and still gives a face of required smoothness. In fact, unless the drawing specifically indicates that the shoulder must be square, the producer often will, if tolerances permit, turn the shoulder with a slight angle. Thus if, as in Fig. 4, the dimension *E* is given as 7/8 in., the face may be so turned that, at its outer diameter the measurement *E* is 0.877 in., whereas it is three-thousandths less at its inner diameter, that is, 0.874. Since, where fractional dimensions are given, the usual tolerance is ±0.005 in., this would make the dimension well within the limits permitted and still give the producer the clearance desired for a forming tool, yet the shoulder would have a taper of 0.003 in. within the face width and would not be square. Again, if the dimensions for the thickness of a flange are given as 0.250 and 0.254 in., the producer will be within the limits if he makes the flange 0.254 in. thick at its inner diameter and 0.250 in. thick at its outer diameter, giving a taper of 0.002 in. on each side. Thus, the need for indicating a square shoulder, when one is required, is evident. If the face has to be undercut, a tool other than a forming tool has to be used, unless conditions make it feasible to feed the forming tool in at an angle, in which case a special attachment is required.

Since it is not feasible to grind a forming tool with perfectly square inner corners, it follows that the outside corner of the turned piece produced with this tool will be broken, that is, slightly rounded or chamfered (Fig. 3). Thus, unless the corner must be square (which will require the use of some other tool and an extra operation), the drawing should be marked "Break corners" at appropriate points, the minimum radius usually being about 0.005 in. (Fig. 3). In general, it is an advantage to have broken corners, as there is less likely to be a burr on the corner and the piece is less likely to give trouble in assembly. Chamfered corners are less expensive to make than rounded corners if the radius of the rounded corner must be held within close limits. If the radius is required, and its length is important, the drawing should so specify (Fig. 4) and not require a minimum radius of less than 0.005 in.

Although interior corners at shoulders can be made perfectly square, this again may require an extra operation. Of course, the corner will not be quite square if produced with a forming tool designed, for reasons above indicated, to cut the shoulder at an angle. A tool having a sharp corner is required to make a sharp interior corner at a shoulder (Fig. 3). As the tool corner is likely to require frequent grinding, cost is increased. Unless some mating part necessitates a perfectly square interior corner, it is better to allow for at least a slight radius, as this is more easily produced and tends to strengthen the piece. If the piece is highly stressed or subjected to an alternating stress, as some rotating parts are, a flaw and subsequent breakage are more likely to develop at a sharp interior corner than at one with at least a small radius.

Forming tools are extensively used to produce shoulders because, when once made, the tools often hold several dimensions within required limits with minimum attention and minimum setup costs. Frequently, also, the required shape is not only made most cheaply with a forming tool, but cannot be made so readily, if at all, with any other type of tool.

Holes.—Preceding paragraphs have made repeated references to holes which are often formed in the axis of the piece, usually by drilling. If the hole requires shoulders (Fig. 5), the tool commonly used is called a "counterbore" or "step drill" and can be made to form either a square shoulder or one at some other angle (Fig. 19*B*). If the hole requires a square bottom, it is usually drilled to about the required depth and the bottom is then finished with a square-end tool, requiring, of course, a separate operation. Naturally, neither square nor other specially shaped bottoms should be specified in a hole unless definitely required (Fig. 4). If they are required, it is better to permit a center spot from drilling (Fig. 3) to remain and to allow a radius or chamfer in the corner than to require a flat or specially shaped bottom over the full diameter (Fig. 3). Shallow holes or end recesses can be cut with a counterbore, end mill, or single-point tool without drilling and, in some cases, the end of the piece can be simultaneously faced and/or chamfered.

If a smoother finish than is produced by a drill or other tools used to make holes is required, the hole is usually reamed (Fig. 19*C*). Burnishing is also done when a still smoother finish is needed. Hollow mills are feasible for rough-forming an annulus from the end of a piece. Holes in tubes are often finished or enlarged by boring tools and, of course, similar tools can be used to enlarge or machine holes previously drilled.

In general the surfaces of holes are cylindrical, but they can be made conical or given other shapes readily. If the taper of the cone is outward and there is no shoulder to interfere (Figs. 11 and 19*B*), it can be formed by a reamer, but if there is a shoulder that interferes or if the cone is smallest toward the outer end (Fig. 10), a boring tool operated by a taper attachment or some equivalent is required. Internal shoulders usually are sharp or square at their inner diameter but can have a radius or chamfer if required. At the outer diameter the corner can be square, but it is easier to produce if it has a chamfer or small radius (Fig. 3).

Although the nature of the tool employed does not always concern the designer, some knowledge of the tools, of how they are used, and of the type of surface they can produce nearly always enables him to design more intelligently.

Burrs and Their Removal.—As in much other machine work, that done on the screw machine often results in burrs. These can be removed but sometimes require extra operations, which add to cost and should be avoided unless there is good reason why the burrs must be removed. A burr or teat always occurs where the piece is cut from the rod or tube, since the piece will break off just before the cutoff tool reaches the center or cuts through the wall if the stock is tubular or drilled through. To remove the burr, teat, or "flag," as it is sometimes termed, from a solid piece requires an extra operation, which can be avoided, of course, if the teat is of no consequence on the finished piece. Such removal is often effected in a secondary operation or in a burring attachment, but if the machine is equipped in the cutoff position with a revolving pick-off collet, which is designed to support the piece and keep it rotating until the cutoff tool reaches or just passes center, no secondary equipment is required. If the piece is hollow where cut off, a burr is thrown into the hole. It can be removed with a chamfering tool either in a pick-off collet or in a secondary operation.

To mark a drawing "Remove all burrs" may, if the instruction is carried out literally, increase cost unduly, because a burr may occur wherever two surfaces meet at an outside corner, on the crests or ends of threads, along the edges of knurled surfaces, and the like. Many such burrs are too slight to bother about, but if they are of importance and must be removed, the drawing should indicate exactly where (Figs. 3 and 5) and extra costs for removal operations should be expected. It may, for example, be necessary to tumble the pieces, if threads or other parts will not be injured by tumbling. Burrs can often be avoided or rendered negligible by chamfering or rounding edges at slight or no extra cost, providing the drawing indicates where this is to be done (Fig. 3).

Finish.—Unfortunately, there are no generally accepted methods of designating finish or degree of smoothness on screw-machine products, except by reference to the type of tool or cut in the final operation. Perhaps the best way to designate finish is to submit a sample having the required finish and specify that the product shall have a finish not inferior to that of the sample. To indicate that the piece "shall be free of all toolmarks" or that given surfaces shall be "perfectly smooth" is too indefinite and may cause unnecessary expense since, strictly speaking or for practical purposes, neither condition can be completely fulfilled. Figure 12 shows methods of designating finish sometimes employed.

The usual commercial practice calls for leaving the external surface as it appears after forming or turning with the usual tool unless the sample or some other requirement calls for a smoother finish in which toolmarks are less in evidence. Similarly, the commercial finish in a hole or recess is that left by a drill or other tool commonly used. If these do not give the required smoothness, the outside diameters can be skived or shaved, using a tool that gives a tangential cut. If a still smoother finish is necessary, surfaces can be burnished with a suitable rotary burnishing tool or tools, the finish being designated accordingly on the drawing. Combination tools, which cut and burnish simultaneously, are sometimes used to advantage. Interior surfaces smoother than those left by the tools that normally form them can be produced by reaming and often interior burnishing can also be done. End faces also can be burnished. Drawings should so indicate if such operations are required and on what surfaces. Burnishing does not alter dimensions significantly but removes toolmarks or renders them invisible.

▽	*Rough machine*	ƒ
▽▽	*Finish machine*	ƒƒ
▽▽▽	*Grind or burnish*	ƒƒƒ
▽ ▽▽▽	*Polish or equal*	

FIG. 12.—Sketch showing symbols sometimes used to indicate the character of finish required. The letters *f* are more commonly used on American drawings. Triangles are used for the same purpose, chiefly on European drawings.

Grinding is not commonly done in screw-machine operations although it can be and has been done in some cases by making use of special fixtures, which include small grinding wheels and a drive for them. If the part requires grinding, the drawing should specify on what surfaces. Screw-machine products are frequently ground, but it is usual to perform the grinding in secondary operations. Contrary to some beliefs, burnishing is a good preliminary to grinding, as less metal need be removed in the grinding operation.

Since extra operations are necessary for producing surfaces smoother than those usually left by primary tools, they should not be called for unless required, as extra costs are involved. If, however, appearance or other considerations dictate the superior finish, the extra cost may be fully justified. Pieces that are to be plated, for example, usually call for polishing and buffing, and the cost of these secondary operations can be minimized by making use of the necessary extra operations in the screw machine to render the surfaces as smooth as such operations can make them.

Knurling.—Knurling is often done in the screw machine on surfaces that must be gripped securely, which require the knurling for appearance sake, or that must be made rough for some other reason. Knurling increases the diameter of the surface to which it is applied, hence the drawing should indicate either the diameter required before knurling (which is preferred) or give the limiting diameter after knurling providing this is important. The type of knurling, the *approximate* number of teeth per inch,

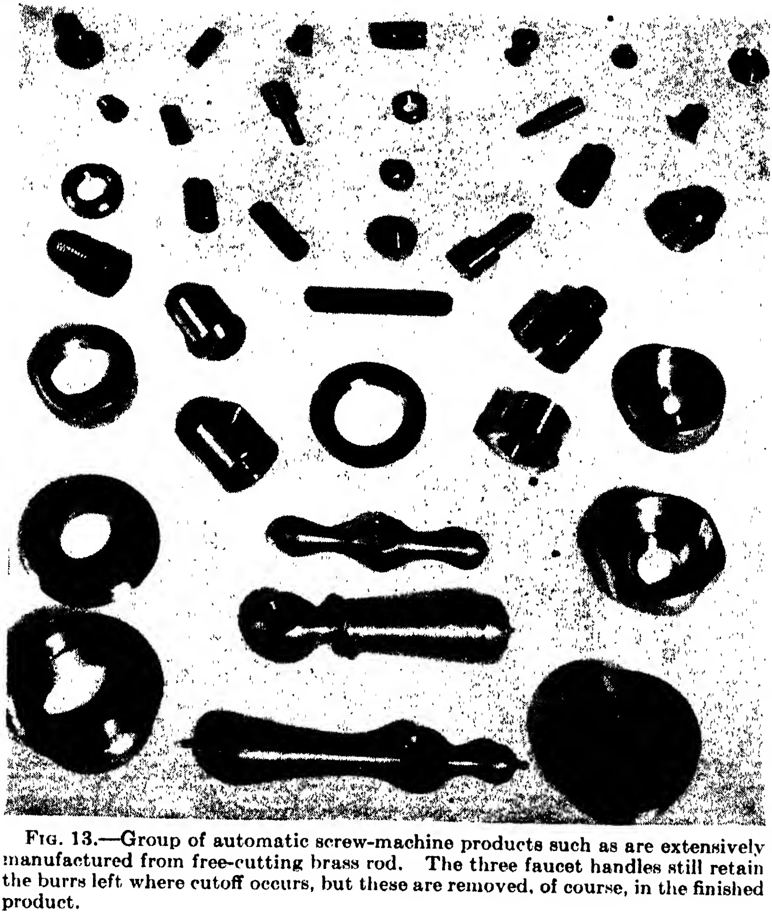

Fig. 13.—Group of automatic screw-machine products such as are extensively manufactured from free-cutting brass rod. The three faucet handles still retain the burrs left where cutoff occurs, but these are removed, of course, in the finished product.

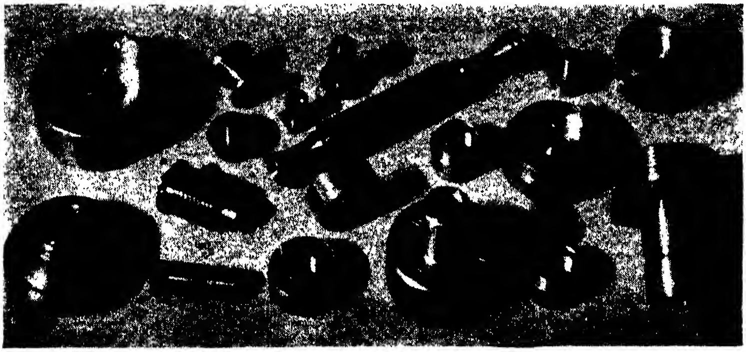

FIG. 14.—Another group of brass screw-machine products, including some with straight and diamond knurling. As the knurled surface of the safety-razor handle is quite long, it doubtless was applied either by feeding in knurls from the end or in a supplementary operation on a thread-rolling machine.

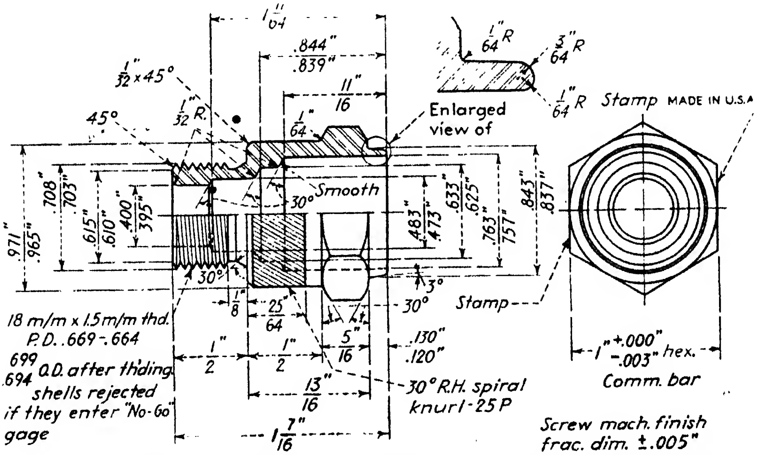

18 m/m x 1.5 m/m thd.
P.D. .669-.664
.699
.694 O.D. after thding
shells rejected
if they enter "No-Go"
gage

Screw mach. finish
frac. dim. ±.005"

FIG. 15.—Well-made drawing of a spark-plug shell that is carefully designed for economical production on a multiple-spindle screw machine. Care in indicating limits on all important dimensions and in stating allowable variation on fractional dimensions is noteworthy, as are also the explicit instructions and the enlarged detail of the lip, which is spun in, to hold the porcelain insulator, at assembly. The thread, being back of a shoulder, must be rolled unless produced in a secondary operation. Chamfer at end of knurled portion prevents burrs, and those at the edges of the hex improve appearance. There is, however, nothing (except allowable variations in fractional dimensions) to indicate whether or not the shoulder adjacent to the thread must be square or not, and the designation, "smooth" on one of the interior shoulders is rather indefinite. Stamped letters on two faces of the hex require secondary operations that might have been eliminated by using a roll to apply the letters (in the screw machine) on the cylindrical surface between the knurl and the hex.

and the maximum depth of knurl should also be specified, avoiding such terms as "medium" or "deep" knurl, since they are indefinite and subject to different interpretations. The common forms of knurling are diamond, straight, spiral, and bead. Diamond knurling produces recesses that cross, leaving a diamond-shape pattern. Straight and spiral knurling produce serrations that are respectively parallel to the axis and at an angle thereto but do not cross. Since it is very difficult to determine in advance just how many serrations a given knurl will produce on a given diameter, the number, if specified, should allow a tolerance of two or three serrations more or less.

Knurling can be done on any outside diameter including turned recesses. There should, however, be a chamfer at the edge of a shoulder if the knurl overlaps or meets the shoulder, as otherwise a sharp burr may be left at the edge of the knurl. The maximum width of knurls suited for use in a screw machine is about $\frac{3}{4}$ in., but, if a greater width of knurl is required and shoulders do not interfere, knurls can be fed in from the end of the piece and produce any width of knurled surface. In recesses or back of shoulders the knurl must be fed in from a cross slide and maximum width is limited. Knurling is often done as a secondary operation in thread-rolling machines, which are well adapted for rapidly making wide knurls with deep serrations.

Many deeply knurled screw-machine products are employed as inserts in die-cast and in molded-plastic products, the knurled portion serving to anchor the piece and prevent it from turning. Straight serrations are often knurled on parts that must make a tight press fit in a mating hole and must not turn therein. This is especially useful when pressing the part into a piece not quite so hard as the knurled part and constitutes an inexpensive means of fastening pieces together that the designer may well keep in mind.

By the use of a roller having raised letters, figures, trade-marks, and the like and operating on the same principle as a knurl, it is possible to produce corresponding debossed markings on external cylindrical surfaces of screw-machine products. This method of marking is frequently employed and costs very little, although it requires, of course, a special tool and an extra operation.

Secondary Operations.—As already indicated, screw-machine products are often subjected to secondary operations, many of which are done in separate machines, just as other products dealt with in this book often require operations other than those by which they are produced initially. Little more than mention of these secondary operations can be made here, as this would go beyond the scope of this chapter. In some cases, however, especially in single-spindle types, the screw machine is provided with attachments, some of them small machines in themselves, and with pick-off and transfer mechanisms that take the piece as it is finished in the screw machine proper and transfer it to the attachment where the secondary operation is performed, after which the piece is ejected. This saves manual handling, as compared with transfer and feeding to an entirely separate machine, and sometimes, though not always, effects a net saving as compared with the separate machining. Space limitations preclude a full discussion of operations done by all types of attachments that involve transferring the piece from the screw-machine spindles to the attachment but the character of work done in the following common forms of attachments may be mentioned: slotting, cross drilling, milling, burring, threading, tapping, counterboring, and chamfering. Standard attachments for performing each of these operations are available for certain single-spindle machines.

Slotting is done most often on screw heads, but of course has other applications; it is performed with a circular saw or narrow milling cutter. Cross drilling is done on any piece that requires a cross hole within the capacity of the attachment. It is often used for cotter holes in screws and bolts, capstan holes in turnbuckle sleeves, and the like. Milling cutters are employed chiefly to cut flats that form wrench holds, including the flats of squares or hexes when these come at diameters such that square or hex stock cannot be used, but various other flats, such as fishtails, are often cut. Burring attachments are used chiefly to remove the burr at the cutoff end of the piece, whether this be a teat at the center or the burr at a hole, the edge of which is chamfered in the burring operation. In some cases, other light operations on the rear end of the piece can be done in such attachments. Attachments of the classes just described are designed, of course, to keep step with the screw machine, handling each piece as soon as it is cut off. In some cases they index the piece so as to drill a hole, for example, through a particular diameter. Such fixtures

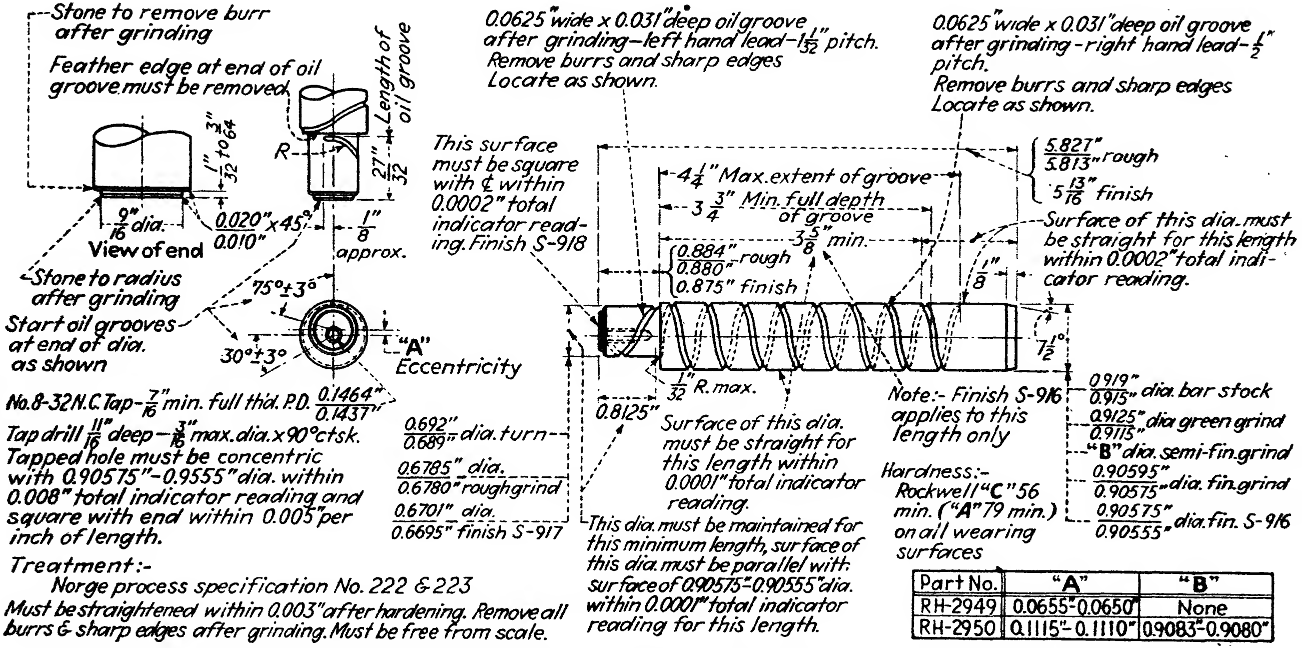

Part No.	"A"	"B"
RH-2949	0.0655"-0.0650"	None
RH-2950	0.1115"-0.1110"	0.9083"-0.9080"

Fig. 16.—This unusual eccentric shaft (for a refrigerator compressor) is turned with the eccentric diameter and longer of the two oil grooves in a multiple-spindle screw machine at the rate of about 1,100 pieces in 8 hr. Special tooling, including the use of reciprocating rough and finish turning tools for the eccentric and of a milling cutter to form the oil groove, is required and the oil groove on the eccentric as well as the tapped hole in that end require supplementary operations, as does the precision grinding of the two diameters. Especially noteworthy are the specific instructions that the drawing contains, even though the part is produced within the plant of the maker of the compressor. The shaft is machined from S.A.E. 4620 steel and is heat-treated after machining but before grinding.

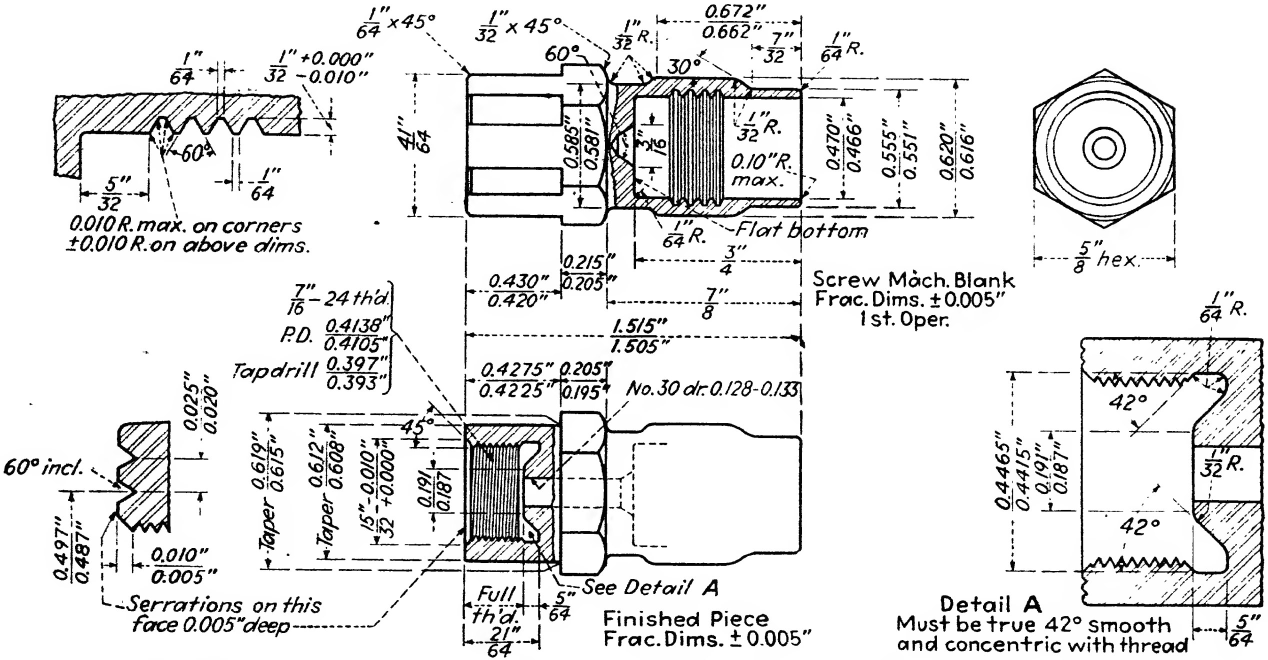

FIG. 17.—Drawing of multiple-spindle screw machine product giving full details. Internal grooves, 42-deg. bevel and relief at end of thread require special tooling. Care is taken to indicate external taper at one end and to designate fillets and radii where wanted. But there is nothing to indicate whether shoulders must be square and the marking "smooth and concentric with thread" is too indefinite. If magazine feed were supplied, the screw machine could be used as a chucking machine to perform all secondary operations.

are not available for all types and makes of machines, but when available they often effect economies that are worth while.

Registry.—If two products of the screw machine are designed to mate in a particular angular or other relation that will not be attained unless this fact is given attention when they are being produced, this should be made perfectly clear on the drawings for both parts. For example, if the pieces are to be pinned together, through holes made independently, and flats on each must then be parallel or have a specific angular relation after

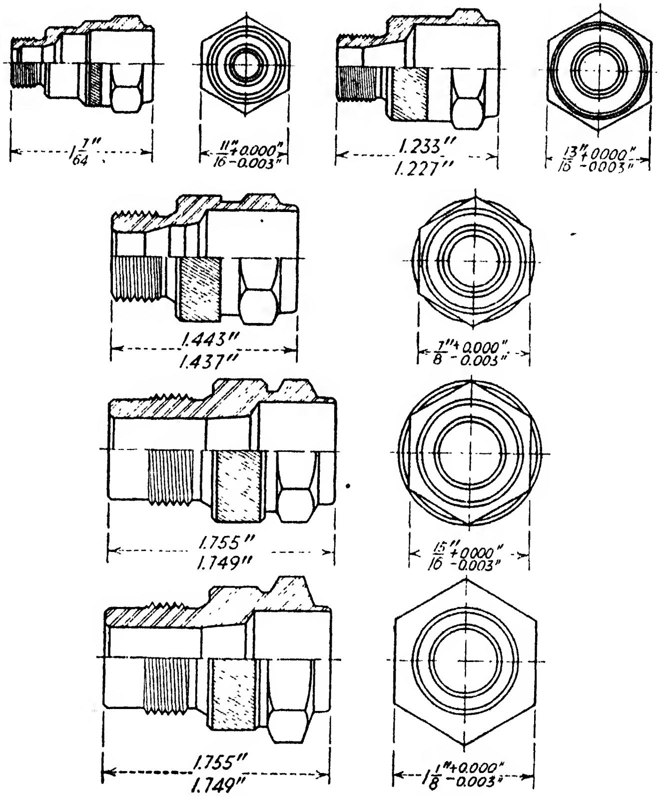

Fig. 18.—Sketches showing (from bottom to top), the evolution, over a period of many years, of spark-plug shell design for production by screw machine. The tendency has been continuously toward smaller and lighter shells, which make for more economical utilization of metal. Use of a hex that does not come at the maximum diameter (as in second and third sketches) makes it necessary to mill the hex flats with unnecessary increase in cost.

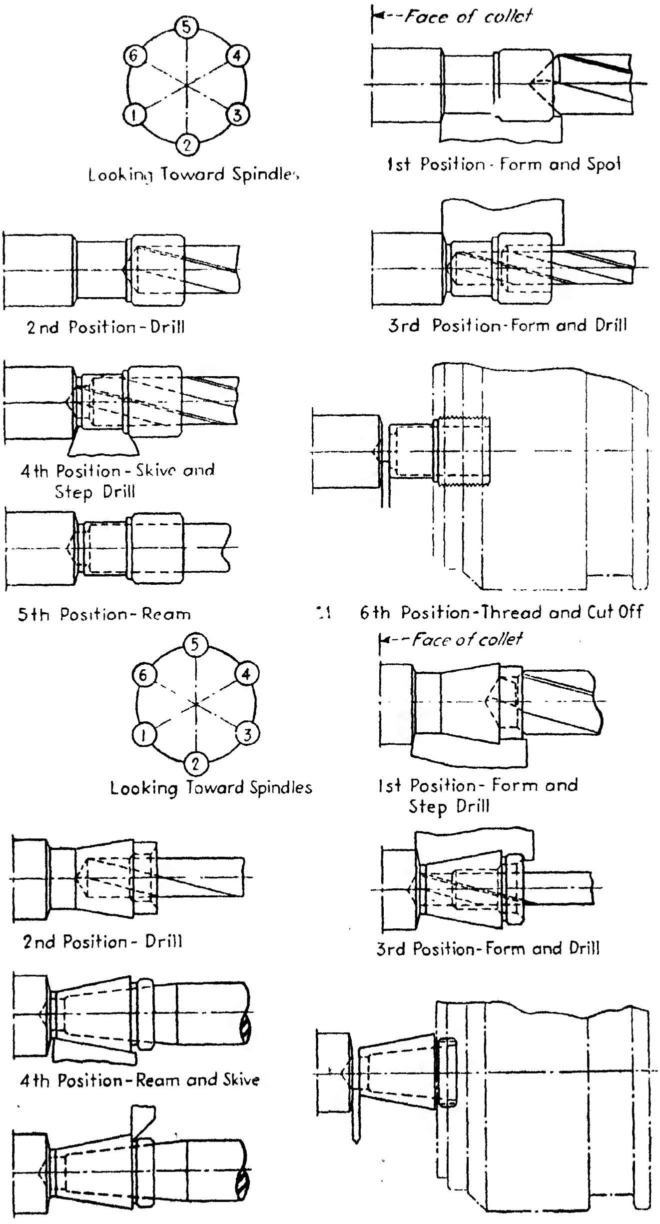

Fig. 19.—See page 171 for legend.

assembly, the relation of the holes to the flats must be correct in each piece or the registry will not occur. Unless the drawings show that a particular registry is required, the parts are likely to be run through on different machines and the whole run may be made with an incorrect setup without the setup man knowing that the two parts go together and must register in a particular way.

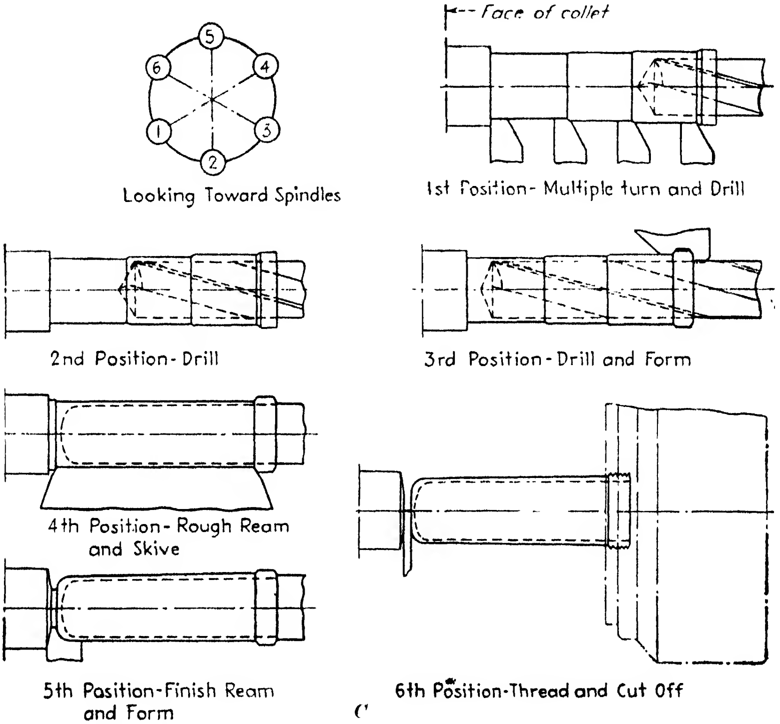

Looking Toward Spindles

1st Position- Multiple turn and Drill

2nd Position- Drill

3rd Position-Drill and Form

4th Position- Rough Ream and Skive

5th Position-Finish Ream and Form

6th Position-Thread and Cut Off

C

FIG. 19 (*A*, *B*, and *C*).—Sketches showing the nature and sequence of the operations required and the tools used to produce, in a six-spindle screw machine, several products typical of those requiring both internal and external cuts. As actual production operations are shown, study of these sketches make it apparent how the design influences both the nature of the operations required and the character of tooling needed, both of which, of course, influence the cost of the product.

Study of Specific Designs.—Few things are more instructive in the design of any type of product than a study of specific designs of similar products that have proved economical or are otherwise representative of good practice. The accompanying illustrations show a selection of such screw-machine products, to

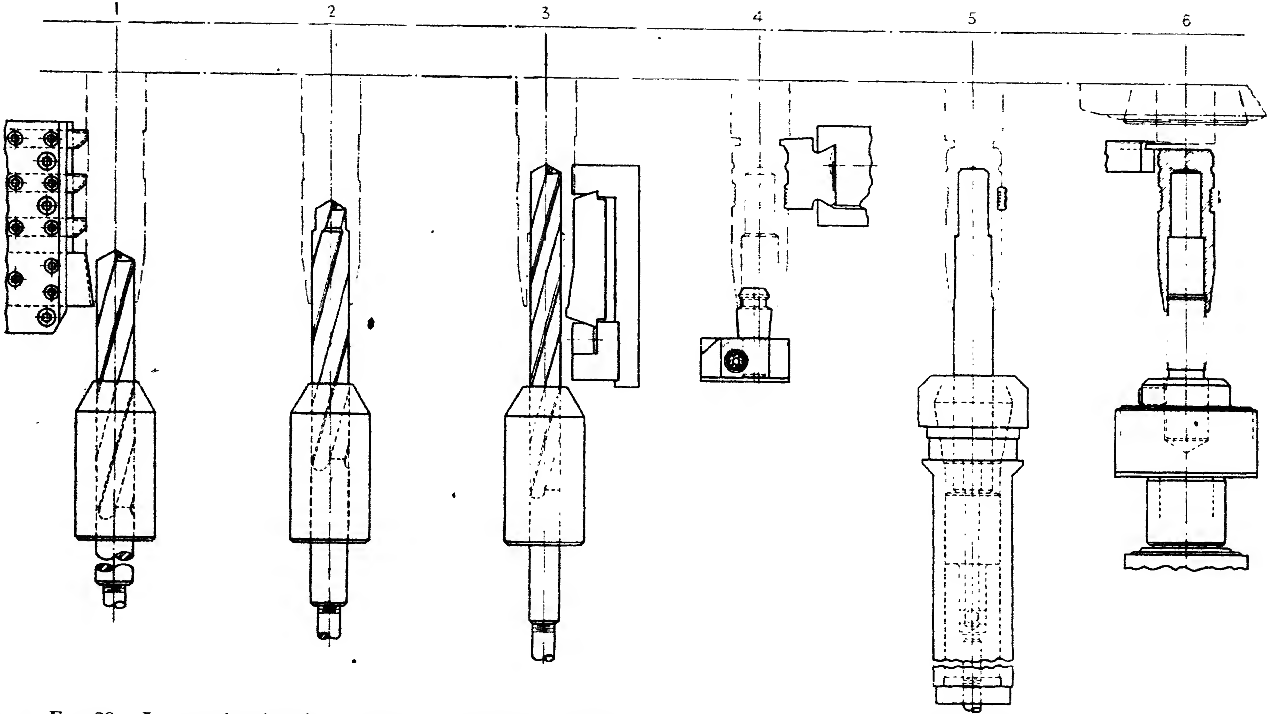

FIG. 20.—Layout showing the successive operations required in producing a shell from 42-mm. bar stock in a six-spindle automatic screw machine. The operations include: (1) multiple turn and drill, (2) counterbore, (3) drill and form, (4) recess and form, (5) knurl (external) recess and ream, (6) tap and cut off.

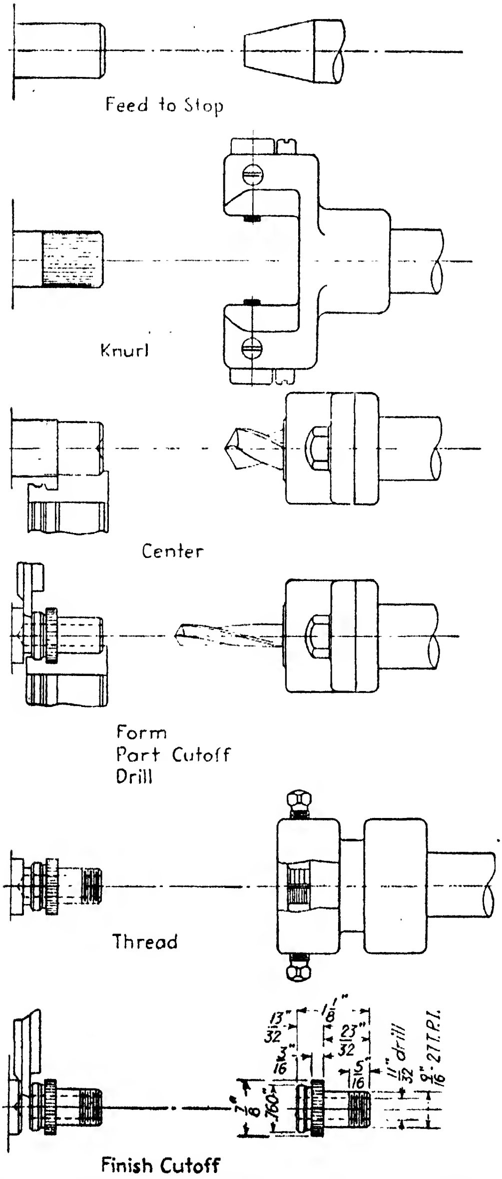

Fig. 21.—Knurled bushing (at bottom) and (above) the five successive steps and the tools required to produce it in a No. 2 single-spindle screw machine. Tools at the right, of course, are those mounted in the turret. Cross-slide tools are shown in contact with the work, at the left.

some of which references have been made already. The captions point out specific items deserving attention, but detailed study will reveal others that may prove equally illuminating. Some drawings show types of parts not commonly produced on the screw machine, chiefly to indicate what can be done when a particular type of design is required even though it involves somewhat difficult problems in tooling or production. It is believed that a study of the drawings here reproduced will repay many designers for the time it takes. Those designers whose contacts with screw-machine-product design have not been extensive are likely to profit most by such study.

CHAPTER IV

DESIGN OF STAMPINGS

By Ralph A. Wagner

What Metal Stampings Are.—Metal stampings are parts pressed or otherwise fabricated from sheet metal or strip stock. They are applied extensively and sometimes almost to the exclusion of other types of parts in products such as electric toasters, stoves, refrigerators, automobiles, airplanes, cartridge cases, pens and pencils, containers, light machines, and hundreds of other familiar articles and assemblies. They not only play an important part in promoting convenience, pleasure, and comfort, but constitute an important product of industry. Their manufacture provides jobs for hundreds of thousands of workers, both directly and in the creation and sale of uncounted products which, except for the stamping, might never become economically practicable.

The stamping industry has grown rapidly as the possibilities and advantages of stamping have become more widely appreciated by designers and manufacturers. Stampings often are substituted for heavier products, such as castings and forgings, effecting a saving in material, in machining, and in shipping costs, but stamping is much more frequently combined with these and with other types of parts adapted for quantity production, to the benefit of both producers and consumers. New and more difficult stampings are constantly being manufactured. Although great progress has been achieved, there is still much to be accomplished in adapting stampings to new uses and in lowering their cost.

Unfortunately, many product designers have not had actual experience and training in die designing, in diemaking, and in the working of sheet metals. Product designers who have had this experience profit greatly by their knowledge of tooling and fabricating and, as a result, offer to the public products moderate or cheap in cost, yet sound in design and, as a rule, pleasing in appearance to the majority of prospective purchasers. Too often, however, designs made without experience in stamping production are broken down into detail drawings, and blueprints are made and distributed for estimate. Some stamping manufacturer procures the order and proceeds to design and build dies to produce the product according to the blueprints and specifications submitted.

When the dies are completed and tryouts and developments are started, troubles begin. Difficulties are encountered in making a satisfactory stamping to conform with the blueprint. Because of the very nature of the product, more operations may have to be added than were originally estimated, and broken promises often result. After much delay and extra expense, satisfactory stampings may be turned out, but the penalties of delay and higher costs have been paid. Even the most experienced designer may not achieve the best product or the lowest cost, but if heed is paid to rules that should control stamping design, costs can be lowered and many pitfalls avoided. It is one important purpose of this chapter to state certain rules, which the designer can profitably follow with a view to securing minimum costs and yet provide stampings that meet all other requirements.

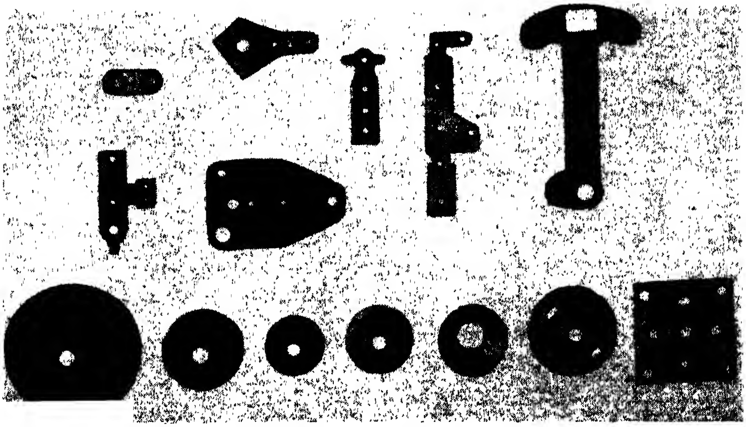

FIG. 1.—Typical small stampings, some of which are flats and others formed and drawn.

Stampings vary from simple flat washers and parts, such as shown in Fig. 1, to one-piece automobile "turret tops" (Fig. 2), which are among the largest thin-gage stampings produced.

Stampings may be products made from sheet metal only a few thousandths of an inch thick up to that ⅜ in. or more in thickness. The methods of working are similar but vary more or less with the size, shape, gage, and kind of material used, the press equipment available, and the quality and quantity of the product to be turned out.

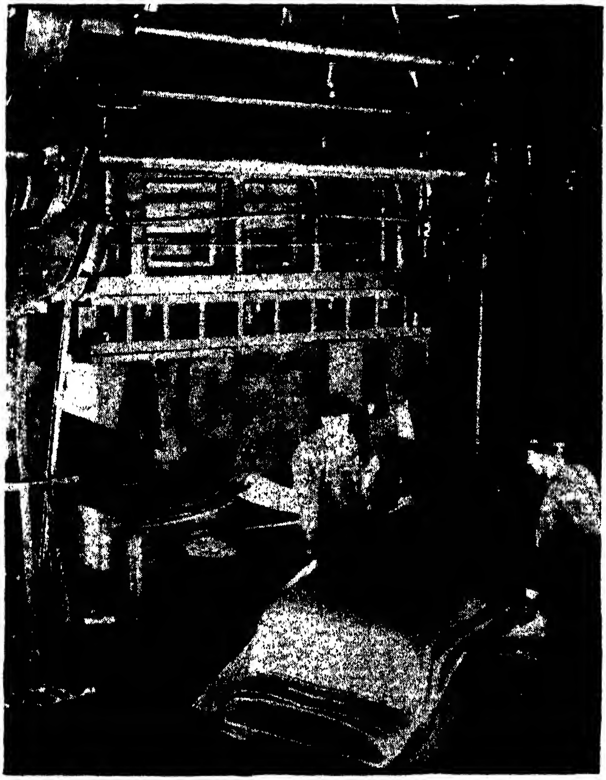

FIG. 2.—Turret top for an automobile, which is among the largest thin-gage stampings produced and which involves deep drawing in the die shown in the background.

Classes of Stampings.—Stampings are classified in various ways. One common classification is in accordance with the operations performed, such as blanked, formed, drawn, or coined. Blanked parts, or those which are merely cut (by blanking) to shape and remain flat, are referred to as blanks or flats. Holes are often punched, or pierced, in blanks. Formed parts are blanks that have been shaped, chiefly by bending, folding, or curling but with little or no flow of metal. Drawn parts are those in which the metal is drawn over certain parts of the die or punch and is stretched in so doing. Drawing always involves more or less flow of metal. The finished drawn part does not have uniform thickness, as a rule. It is often but not always thinner than the blank over some areas. In coining, the metal of the blank is caused to flow as a result of pressure or impact. A coined stamping often has some sections that are thicker than the blank. Coined stampings are sometimes made from rod (wire) or bar stock but, in common with nearly all other stampings, are usually made from sheet or strip stock.

The term "pressed metal part" is sometimes preferred to that of stamping although "stamping" is the commoner term in the United States. In England, the term "pressing" is used rather than stamping.

Stampings are commonly made in stamping presses or punch presses, but some blanks can be made in shears and some formed parts in brakes. As a rule, neither shears nor brakes require dies, other than stock ones, but the stampings are commonly made in dies generally built especially for a given part. Dies usually include a part termed the "die" or "female die," which is fixed to the bed of the press, and a punch, which is usually the upper and movable member, attached to the ram of the press. Some dies have a multiplicity of parts, which need not be dealt with here. Metal is shaped between the die and the punch or by the combined action of these two parts.

Most stampings come within one of the following nine classifications:

1. *Flats.*—Flats are stampings the faces of which are not bent or formed but are in one plane. They may have straight or curved edges and may or may not have holes. Some flats are referred to as blanks, especially when other operations are to be performed on them, although they often constitute the finished piece. Flats include such articles as washers, links, bottle openers, some key blanks, disks, quadrants, corner reinforcements, laminations, brackets, and certain typewriter or adding-machine parts. Several such parts are shown in Figs. 1 and 3. Figure 4 shows flats blanked from strip stock as the latter is fed through blanking dies.

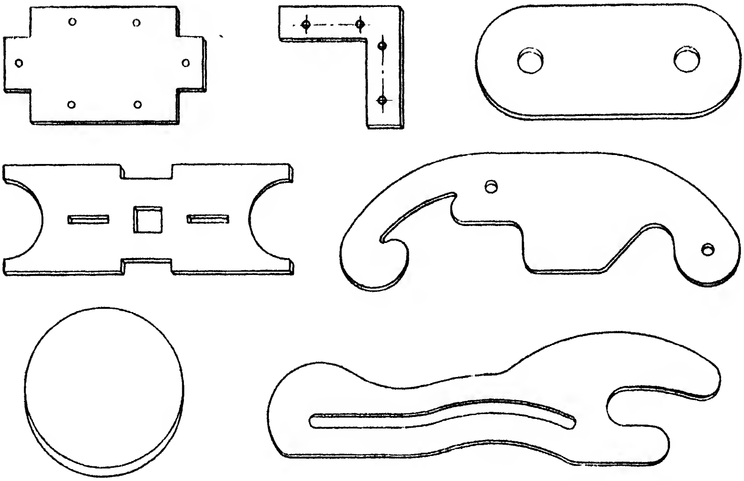

FIG. 3. Typical examples of flats, which are punched or sheared and have flat surfaces.

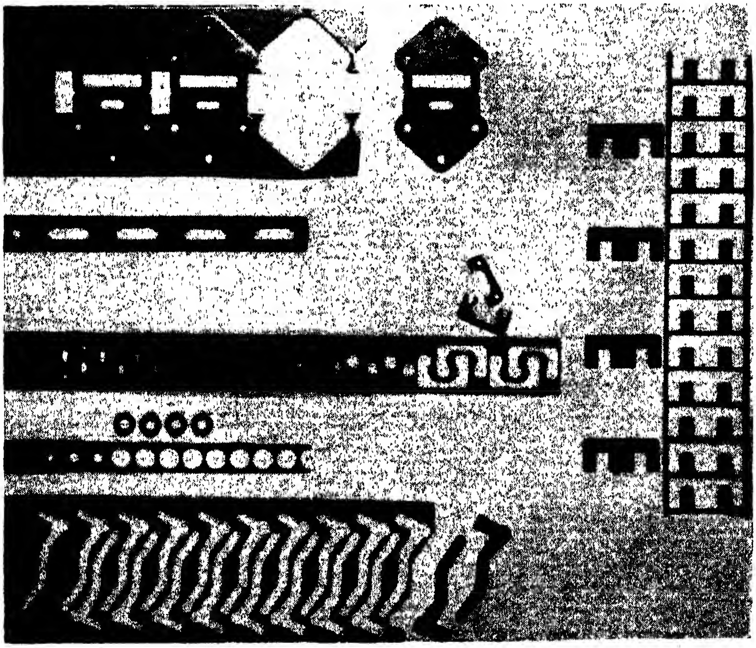

FIG. 4.—These parts are blanked from strip stock as the latter is fed through a die that shears the blank and leaves waste at the edges and between the holes punched in the strip.

2. *Bends, Folds, Brakes, Curls, and U's.*—This class of stampings has one or more bends at any angle or angles and may have straight or curved edges. Included also are parts having folds, corrugations, or flanges. Flanges may be notched, curved, tapered, or plain, with or without holes. Such stampings are commonly made from stock up to $\frac{3}{16}$ in. or even somewhat thicker and are often in long lengths. Most shops refer to such stampings as brake work, since they can, as a rule, be made on brakes. Examples of this class of stampings are shown in Fig. 5.

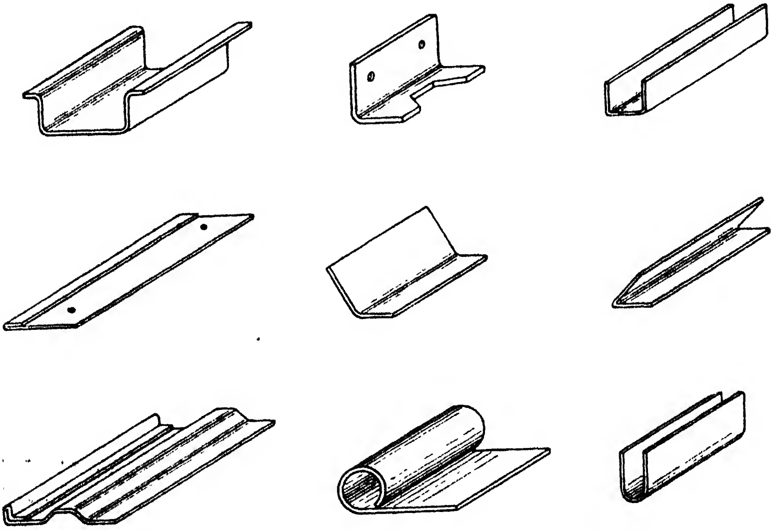

FIG. 5.—Typical examples of bends, folds, brakes, curls, and U's, which are the result of forming operation when produced on a press or brake.

3. *Small Miscellaneous.*—Included in this group are round, irregular, oblong, and other stampings having straight or curved edges and with or without embossing, depressions, notches, perforations, or flanges. The stock used ranges from very light up to $\frac{3}{32}$-in. material and size from very small up to about 4 by 4 in. Parts in this class, some of which are shown in Fig. 6, include shade holders, latches, escutcheons, eyes for lacing, and small housings. Parts such as are made in progressive dies often fall in this classification.

4. *Small Cupped.*—Cylindrical, rounded, and other cupped stampings having a bottom completely surrounded by straight

or return flanges, or parts of the same nature having the bottom portion removed or stepped or forming a neck, constitute the fourth class of stampings. All such are drawn parts have undergone operations in which the metal is stretched or drawn. Size ranges from about ½ in. in diameter or breadth up to about 4

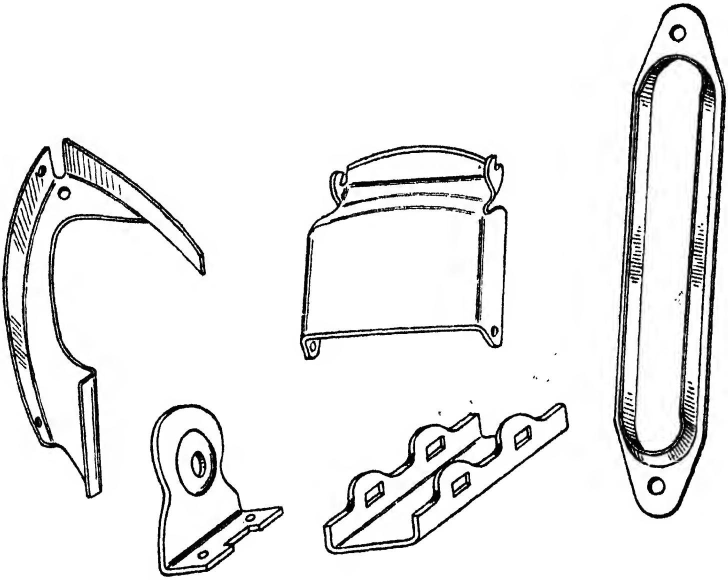

FIG. 6.—Example of small miscellaneous parts (classification 3) produced by stamping.

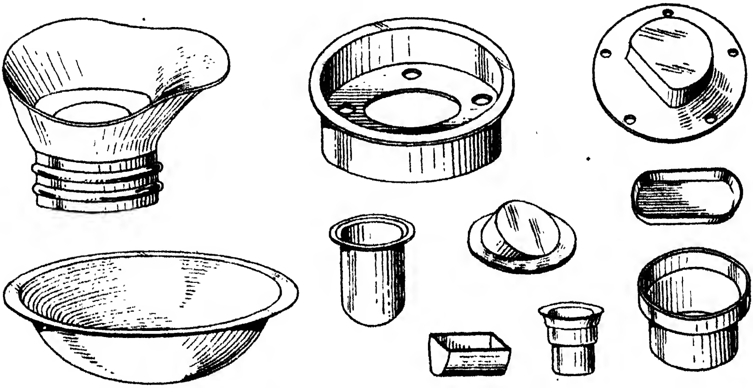

FIG. 7.—Parts of this type (classification 4) are commonly referred to as small "cups," though some of them have open bottoms.

in. In this class are such products as refrigerator skids, spring cups, caps or screw tops for containers, hinge covers, and small motor end plates. Figure 7 illustrates typical parts in this class and Fig. 8 shows how cupped parts appear after each successive operation in which they are formed and drawn.

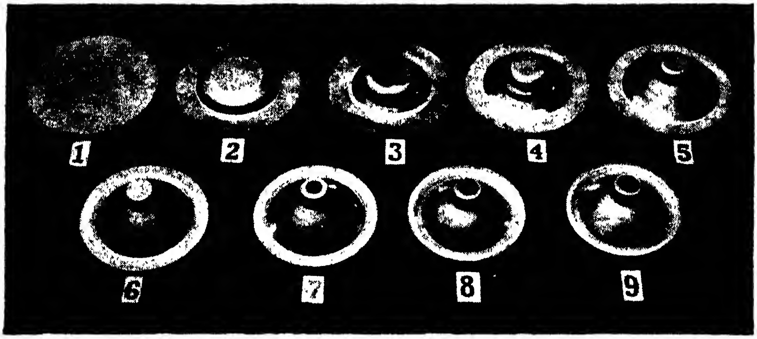

FIG. 8.—Parts, from blank to finished piece, showing the successive steps in producing a small cup or drawn part.

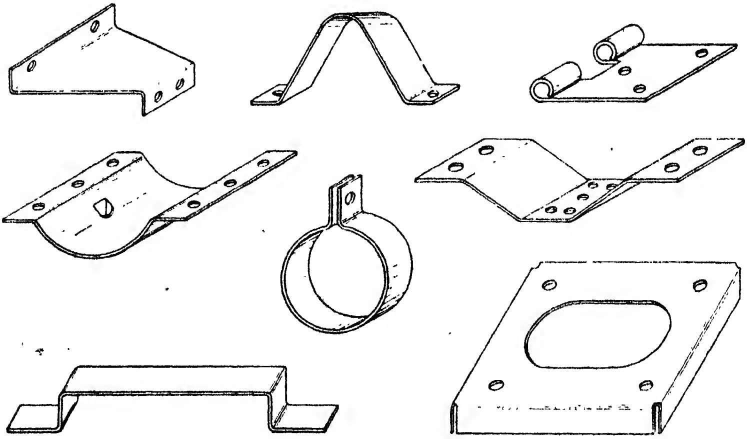

FIG. 9.—Examples of small- to medium-sized stamping (classification 5), all of which happen to be formed rather than drawn.

5. *Small and Medium Miscellaneous.*—In this class are formed parts such as straps, handles, brackets, hinges, bent broached gussets, reinforcement plates, with plain or extruded holes. The parts may be notched, lanced, bent, formed, or curled. Stock ranging in thickness from $\frac{1}{16}$ to $\frac{3}{16}$ in. is commonly used, and

size runs from about 4 to 12 in. in length and 1 to 12 in. in width. Figure 9 shows parts of this class.

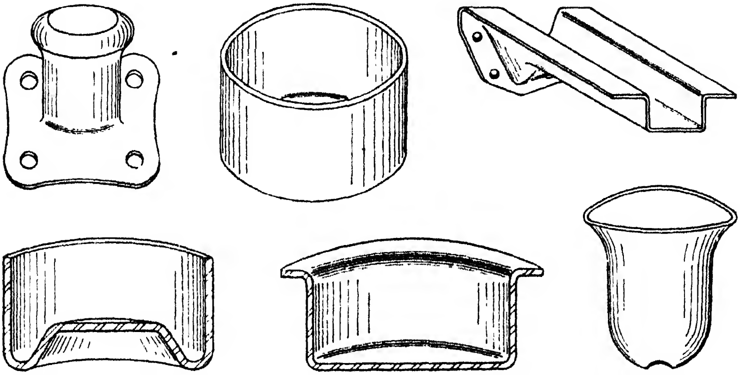

FIG. 10.—Medium to heavy stampings (classification 6) that involve moderately deep draws and/or forming.

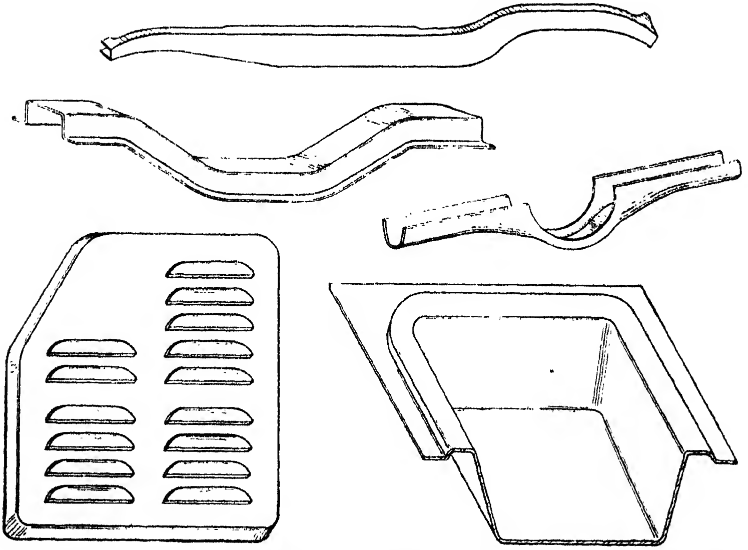

FIG. 11.—These heavy stampings (classification 7) include one with fairly deep draw and some of large area with shallow forms, one of which has louver openings.

6. *Medium Heavy.*—Cold-formed or -drawn parts, usually of mild steel, in shapes such as cups, flanged drums, step hanger, or other brackets in round and irregular shapes are included in

class 6. The cups run in size from about 3 to 10 in. in diameter and stock thickness from about 3/32 to 5/16 in., depending on the size of part and its design. Brackets and other parts in this class are usually from about 1/16 to 1/4 in. in thickness, from 8 to 16 in. long, and from 2 to 4 in. wide. Examples of such parts are shown in Fig. 10.

Fig. 12.—Press equipped with a die for producing the heavy banjo-type axle stampings shown on the truck in the foreground.

7. *Heavy.*—Cold-formed and -drawn parts made from material (usually steel) 1/8 to 5/16 in. thick and ranging in sizes and shapes larger than class 6, constitute the seventh class. They include parts such as automobile frame side rails and cross member, frame parts involving difficult curves and contours, deep-drawn laundry tubs, large brake drums, axle housings, tunnel liner plates, heavy channels, certain tractor parts, and parts with

louvers or heavy embossing. Examples of such stampings are shown in Fig. 11. Figure 12 illustrates a press in which heavy stampings constituting half of banjo-type axle housings for passenger cars are formed, some of the formed stampings being shown in the foreground.

8. *Heavy Hot.*—Parts formed or drawn hot from high- or low-carbon steel $\frac{3}{16}$ to $\frac{7}{16}$ in. thick, including such parts as end flanges, insulator caps, pipe trunions, handles bent from pipe, tractor lugs and wheels, corrugated plates, and heavy straps, braces, and brackets constitute class 8. Examples of such parts are illustrated in Fig. 13.

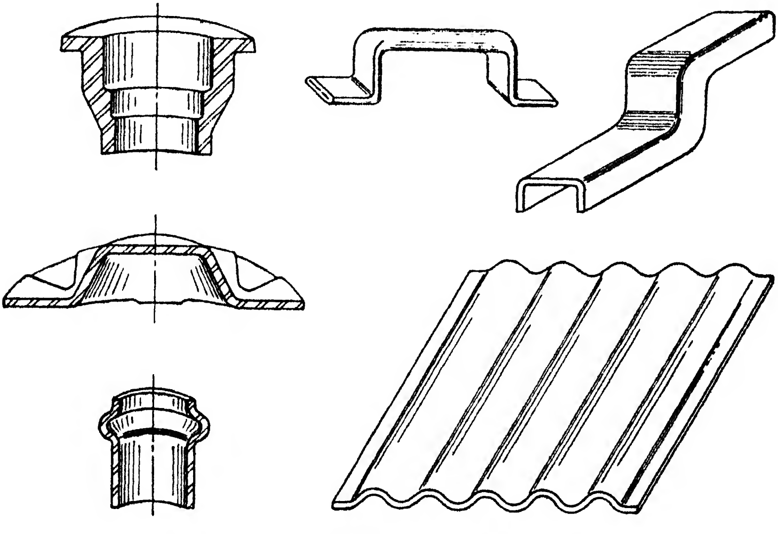

FIG. 13.—Examples of heavy hot-formed stampings (classification 8), including some in which the section thickness is varied by coining or its equivalent.

9. *Deep Drawn.*—All deep-drawn stampings are placed in this classification. They range in size from small cartridge shells up to washing-machine and laundry tubs, cowls for airplanes, refrigerator inner and outer doors and side and lower panels, oil and tote pans, automobile fenders, door panels, corner top panels, hoods, tire wells, wheel parts, and many other automobile parts, including one-piece turret tops. Figure 14 shows typical parts of this type and Fig. 15 illustrates a toggle and a hydraulic press employed for deep drawing and shows some deep-drawn parts in process.

Metals Commonly Used for Stamping.—When designing metal stampings, it is always well to refer to the catalogues of metal manufacturers, for physical properties, for gages available, and for proper specifications to cover the particular sheet or strip stock to be ordered. These catalogues often indicate which type and finish of material is best suited for given types of parts.

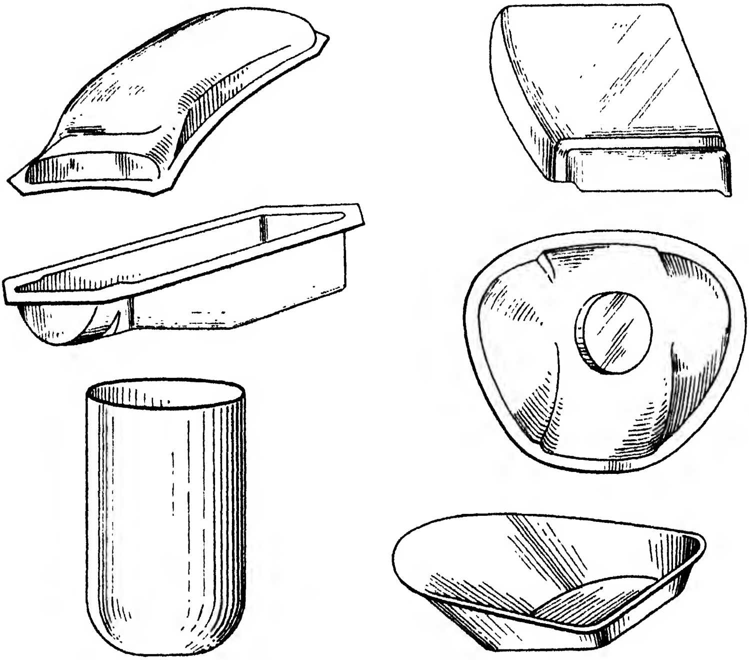

Fig. 14.—Deep-drawn stampings (classification 9), all of those shown being of large size.

Ferrous materials, usually low-carbon steel, are employed for by far the largest range of stampings because they are lowest in cost and have excellent working properties and high physical properties. There is also a large production of nonferrous stampings, especially from brass and aluminum. Other materials used include bronze, copper, zinc, nickel alloys, magnesium alloys, and even silver and gold, among other alloys. There are, of course, many grades of steel, both hot- and cold-rolled, many special alloys, both ferrous and nonferrous, and some specially treated steels, such as tin plate, terne plate, zinc-coated plate, and the like. Even clad, or composite, metals are sometimes stamped and drawn.

The term "gage" (often spelled "gauge") refers to thickness and is designated by number—the larger the number, the thinner is the gage thickness. Table I gives the thickness in inches corresponding to each gage number. It is common practice to refer to sheet and strip by gage numbers, but thickness in inches is also given or used alone on many drawings.

FIG. 15.—A heavy toggle press (left) and a hydraulic press such as are extensively used for producing deep-drawn parts of the type here shown. The operator is removing a part produced in a single draw from blanks seen on the table in the center foreground.

Hot-rolled Steel.—Hot-rolled steel strips are produced in 23- to 7-gage material. Plates are rolled from 3⁄16 up to 2 in. thick, but rarely are stampings made from material thicker than ½ in.

Mills roll to specifications and qualities as noted in their handbooks, which are published several times a year, as changes in prices occur.

TABLE I.—GAGE NUMBER, THICKNESS, AND WEIGHT OF UNITED STATES STANDARD STEEL SHEETS

Gage No.	Thickness, in.		Weight per sq. ft.	Weight per sq. in.
	Fraction	Decimal		
0000000	1/2	0.50	20.4	0.141666
000000	15/32	0.46875	19.125	0.132812
00000	7/16	0.4375	17.85	0.123958
0000	13/32	0.40625	16.575	0.115104
000	3/8	0.375	15.3	0.10625
00	11/32	0.34375	14.025	0.097395
0	5/16	0.3125	12.75	0.088541
1	9/32	0.28125	11.475	0.079687
2	17/64	0.26562	10.8375	0.07526
3	1/4	0.250	10.2	0.070833
4	15/64	0.234375	9.5625	0.066406
5	7/32	0.21875	8.925	0.061979
6	13/64	0.203125	8.2875	0.057552
7	3/16	0.1875	7.65	0.053125
8	11/64	0.171875	7.0125	0.048697
9	5/32	0.15625	6.375	0.04427
10	9/64	0.140625	5.7375	0.039843
11	1/8	0.125	5.1	0.035416
12	7/64	0.109375	4.4625	0.030989
13	3/32	0.09375	3.825	0.026562
14	5/64	0.078125	3.1875	0.022135
15	9/128	0.0703125	2.86875	0.019921
16	1/16	0.0625	2.55	0.017708
17	9/160	0.05625	2.295	0.015937
18	1/20	0.050	2.04	0.014166
19	7/160	0.04375	1.785	0.012395
20	3/80	0.0375	1.53	0.010625
21	11/320	0.034375	1.4025	0.009739
22	1/32	0.03125	1.275	0.008854
23	9/320	0.028125	1.1475	0.007968
24	1/40	0.025	1.02	0.007083
25	7/320	0.021875	0.8925	0.006197

Stampings used in unexposed places or as part of some mechanism where refinement in finish is not essential usually are made from hot-rolled steel. Switch boxes, automobile-frame parts, and tractor parts are typical stampings of hot-rolled steel, as are some of the stampings in classes 1, 2, 3 and most of those in classes 5, 6, and 7. The same parts often can be produced from any one of several different materials, but the place in which it is to be used frequently determines the type of material to be specified.

Cold-rolled Steel.—Light steel sheets are rolled cold in gages from 30 to 17 and heavy sheets are rolled from 16 to 7 gage. As with hot-rolled steel, the strips are rolled to specifications that determine quality. Cold-rolled sheets are superior in finish to the hot-rolled type as they receive several cold passes in rolling. Cost is usually higher than for hot-rolled sheet, but products made from the cold-rolled type are employed where superior finish warrants the higher price. Most stampings for exposed parts used in homes and offices and for such products as refrigerators, automobile bodies, metal furniture, and many others with enameled or plated surfaces are produced from cold-rolled stock to ensure better appearance and/or reduce finishing costs. When parts such as washing-machine tubs, refrigerator inner shells, and range parts are to be porcelain-enameled, special enameling-iron sheet is specified. It is a special type of cold-rolled steel. Stampings manufactured chiefly from cold-rolled steel are listed under classes 2, 3, 4, and 9, though some so listed are also produced from hot-rolled stock where appearance is not important. There are, of course, many grades and different analyses of cold-rolled steel. Certain grades are especially adapted for deep drawing and must be employed for parts requiring deep draws.

Tin Plate.—Tin plate is a good grade of steel, from 15 to 38 gage, coated with tin by hot dipping in special machines. It is used for such products as tin cans and containers,[1] inexpensive toys, novelties, and a variety of other parts often seamed and soldered in assembly. This type of material is sometimes used for stamping in classes 2, 3, and 4. It is worked in the same way as other steel of the same gage. The tin coating is very thin but provides a bright finish, high in corrosion resistance and easily soldered.

---

[1] Tin cans and containers are an important but highly specialized type of stamping usually made by machines especially developed for the purpose. For this reason and because they are rarely produced in the ordinary stamping shop, no details concerning their design are included in this chapter.

Stainless Steel.—Stainless-steel sheets are rolled from 0.005 in. up to 8 gage in thickness and in plates from $\frac{3}{16}$ up to 1 in. in thickness. Several analyses are furnished in a number of different finishes in both hot- and cold-rolled material. Many such sheets are supplied polished, an operation done after rolling. This is an expensive and high-grade material. Cutlery and mirrors are among the products first made from stainless steel, but it is now drawn and formed into stampings of beauty and utility for household and many other uses as in flatirons, toasters, lamp bases, cooking utensils, trays, hospital, hotel and institution equipment, food containers, and the like. High corrosion resistance is a primary consideration in its use. A lasting polish and pleasing appearance are readily attained. Stainless-steel stampings are gaining important uses in the aircraft industry because strength is high and very light gages are available. Parts in any class except 7 and 8 can be produced.

Several other materials containing large percentages of nickel, such as nickel-silver and Monel metal (both of which are nonferrous), are sometimes used for stampings in products similar to those stamped from stainless steel, as they too are high in corrosion resistance.

Copper.—Copper, a reddish metal and an important one, is the base metal of bronze and brass. Copper, as such, is rolled into sheets and strips for fabricating into formed and drawn products, especially those requiring high corrosion resistance, great ductility, or high electrical or heat conductivity. Copper is available in either hard or soft grades. Copper and copper-base alloys can be had in thickness ranging from 0.0162 in. or less up to 0.250 in. or above. Copper can be purchased in rolls (strips) or sheets and can be had tinned on one side. Copper does not tarnish rapidly in dry air but does corrode in moist air, forming a poisonous compound. Stampings produced from copper include electrical parts, kitchen utensils, washtubs, and radiator and condenser parts. Assemblies are often folded or seamed together and soldered where leakproof containers are required, although, of course, deep-drawn seamless parts are readily produced.

Bronze.—Bronzes are alloys of copper, usually brownish in color, rolled into sheets of various thickness, as for copper. Bronze is formed or drawn into various products, chiefly those which require special types of corrosion resistance and/or in which a bronze color is wanted for ornamental reasons. Many beautiful novelties, lamp parts, artistic hardware, springs, and stamping used in concrete mats are among the parts in which bronze is effectively used.

Brass.—Brass is usually yellow or reddish gold in color. Its base material is copper but various percentages of zinc up to 40 per cent or more are used and lead, tin, or silicon is sometimes added. Brasses are high in corrosion resistance and are more adaptable to deep drawing than bronze and than almost any common alloys. Brass is furnished in sheet, strip, and coils for forming, drawing, and spinning. Thickness ranges from 0.005 to 0.064 in. in soft material and in "half hard" from 0.0126 to 0.750 in.

More types of stamped products are made from brass than from any other nonferrous material. A few such stampings are: cartridge shells, fuse caps, hardware, gaskets, a wide range of electrical parts, name plates, clips, brackets, eyelets, tanks, trays, radiator parts, reflectors, lamp parts and fixtures, clock and watch parts, keys, paper binders, trim strips, evaporator parts, musical-instrument parts, and the like. Parts made from brass are often polished, lacquered, enameled, or plated and can be joined by practically all methods used on other metals.

Zinc.—Zinc is a white metal and is available chiefly in strips used for drawing and forming. It is supplied in thickness ranging from 0.004 to 0.250 in. Zinc takes a high polish but tarnishes easily and, though corrosion resistance in dry atmosphere is good, zinc is subject to white rust in the presence of moisture. The chief stampings produced from rolled zinc are can tops and cells for dry batteries, but weather stripping, embossed plates, moldings, eyelets, and similar parts can be produced as stampings. Zinc is a relatively soft metal and quite ductile, hence it is easily worked. It can be plated, lacquered, enameled, or chemically colored and is easily soldered. Manufacturers suggest that a sketch or drawing of the product be sent to the mill to ensure proper material for the job.

Aluminum.—Aluminum is a silvery white metal and runs in hardness about the same as zinc. It is a good conductor of heat and electricity. Resistance to corrosion is good in dry air but white oxides form in moist and salt air. Many aluminum alloys are available, some of which can be heat-treated. Aluminum is one of the lightest common metals and primary uses are those in which light weight, color, or special forms of corrosion resistance are desired. Aluminum and its alloys are rolled in sheets and strips for stamping, and different degrees of hardness and different finishes are available. The gages manufactured range from 0.0063 to 0.5 in. although very light foils are also made.

Aluminum and aluminum-alloy stampings are used extensively in the construction of trains, bus and truck bodies, airplane parts, kitchen utensils, mess kits, novelties, cups, caps, thimbles, and the like. Stampings in most of the classifications given above can be formed or drawn from aluminum and its alloys, as they are ductile materials. Welding, brazing, riveting, and other assembly methods are used.

TABLE II.—MECHANICAL PROPERTIES OF SHEET METALS AND ALLOYS FOR STAMPINGS

Name	Ultimate strength (tension), psi	Yield strength (tension), psi	Elongation, % in 2 in.	Brinell hardness
Brass (sheet) ¼ hard	45,000	28,000	27.5	50
Bronze S.A.E. 77	55,000	28,000	15	82
Wrought steel S.A.E. 1010	56,000	28,000	35	110
Wrought steel S.A.E. 1020	60,000	30,000	26	120
Wrought steel S.A.E. 1025	67,000	33,000	25	135
Wrought steel S.A.E. 1035	87,000	52,000	24	175
Wrought steel S.A.E. 1045	97,000	58,000	22	200
Wrought steel S.A.E. 1050	102,000	60,000	20	207
Wrought steel S.A.E. 1095	150,000	100,000	15	300
Stainless (18-8)	104,000	54,000	48	170
Mild steel, 0.05 to 0.15% carbon	37,500	27,000	40	75–100
Tin plate	50,000	24,000	35	77
Terne plate	24,000	8,000	35	40
Monel metal	80,000	67,000	18	162

Strength of Materials Applied in Stampings.—When in service, some stampings are heavily stressed and design has to be such that the stress is carried without injury to the stamping. The intensity of stress and the manner in which it is applied then commonly determine the gage and sometimes the character of material chosen. In the manufacture of stressed parts, both the strength and the working properties of the stock have to be considered, but in parts that carry little or no stress, the working qualities of the metal are often the primary consideration governing its choice. The more ductile the material, the easier it works and it is usually essential to select a ductile material when severe working (such as deep drawing) is required. Table II gives data on the properties of many metals, including the percentage elongation in 2-in. samples and Table III gives similar data for aluminum alloys. When elongation is high, ductility is also high. Though high ductility is commonly essential for severe working and can often be improved by annealing (which is sometimes essential), costs can sometimes be lowered by employing a type of design in which high ductility is not required. Demands

TABLE III.—MECHANICAL PROPERTIES AND COMPOSITION OF ALUMINUM-ALLOY SHEET FOR STAMPINGS

Alloy and temper	Ultimate strength, psi	Yield strength, psi	Elongation, % in 2 in.	Brinell hardness	Composition*			
					Si	Mn	Mg	Cr
2S-O	13,000	5,000	35.00	23				
2S-¼H	15,000	13,000	12.0	28				
2S-½H	17,000	14,000	9.0	32				
2S-H	24,000	21,000	5.0	44				
3S-O	16,000	6,000	30.0	28		1.25		
3S-¼H	18,000	15,000	10.0	35				
3S-½H	21,000	18,000	8.0	40				
3S-H	29,000	25,000	4.0	55				
4S-O	26,000	10,000	20.0	45		1.25	1.0	
4S-¼H	31,000	22,000	10.0	52				
4S-½H	34,000	27,000	9.0	63				
4S-H	40,000	34,000	5.0	77				
52S-O	29,000	14,000	25.0	45			2.5	0.25
52S-¼H	34,000	26,000	12.0	62				
52S-½H	37,000	29,000	10.0	67				
52S-H	41,000	36,000	7.0	85				
53S-O	16,000	7,000	25.0	26	0.7		1.25	0.25
53S-W	33,000	20,000	22.0	65				
53S-T	39,000	33,000	14.0	80				

* Per cent alloying elements. Aluminum and normal impurities constitute remainder.

for unusually high ductility often result in higher material costs and, when annealing is required to increase ductility, the cost of annealing, including pickling, handling, etc., should not be overlooked. Relatively nonductile materials are well suited for some types of parts, and, when stiffness is of more importance than ductility, harder and less ductile materials are commonly preferred. For such reasons, the designer, especially when he is not versed in production requirements, should consult with an experienced stamping producer before finally specifying either the type or the grade of metal to be used.

Details of Stamping Design.—Much can be done by the designer to facilitate the manufacture and thereby reduce the cost of stamped products. Usually there are some apparently good reasons why stampings are so designed as to cost more to produce than simpler designs would cost. But product designers who have not had the opportunity to design dies or to follow their tryouts are likely to overlook certain simple rules that should be followed when designing stampings. Supervising engineers are often too busy to follow detail designs of individual stampings and may not be able to keep abreast of stamping-fabrication methods. Often, detail design is delegated to inexperienced men who do not know what to do and what to avoid to simplify production and to ensure that no unnecessary extra cost is incurred. As a result of the author's experience in manufacturing stampings from drawings submitted for quotations (many of which could be changed in design to effect a saving and still serve the same purpose), the following rules for design have been prepared. They are sound from an engineering standpoint but cover in particular those points which designers should observe with a view to economy in production and consequent lowering of cost.

Rule 1. Size of Piece: As the cost both of dies and of stampings made in them increases with size, the latter should be kept as small as conditions permit. Sometimes cost can be lowered by making stampings in more than one piece and subsequently assembling these stampings even though a single-piece job is feasible, but the number of pieces to be produced is the determining factor.

Rule 2. Blank Size: Stock lists should be studied and a standard size that is rolled without price extras should be chosen so as to cut with minimum waste. (See Appendix for method used in computing blank size for certain drawn and formed parts.) The developed size of the material required for each stamping should be determined to see whether or not the size will cut economically from the sheet. Figure 16 shows economical and uneconomical shearing. Figure 17 shows how nesting is done and how waste results when good nesting on standard strip is not attained. Designs frequently can be modified as to size and contour to save material. Often the blanks for two or more different stampings can be worked out so that they nest economically.

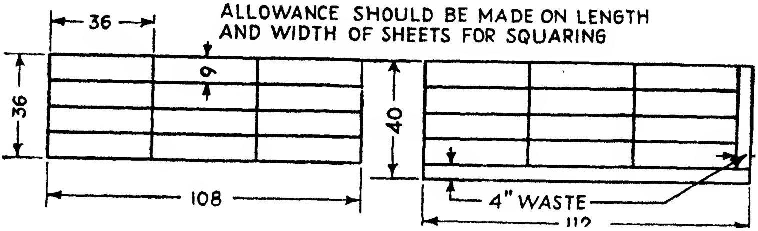

FIG. 16.—A sheet of the size shown at the left can be sheared into blanks dimensioned as indicated, whereas much waste results if the sheet and blank size shown at the right are employed. In all cases an allowance for squaring the sheet should be made.

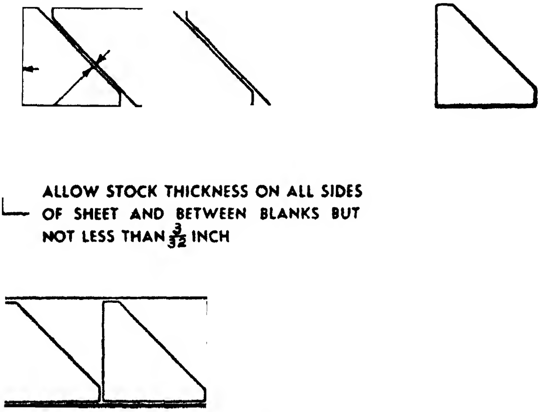

FIG. 17.—A blank having the proportions shown can be cut economically from strip stock when nested as shown above. If shearing is done as in the lower figure, much waste results. In all cases $\frac{3}{32}$ in. minimum or an allowance not less than stock thickness should be made at edges and between blanks when blanking is done by punching.

Rule 3. Gage of stock should be as light as conditions permit, as then stock is not only easier to work but costs less than thicker material. If a gage over or under mill tolerance does not matter, however, it is well to specify an alternate or the limits allowable, as sometimes a saving can be made in the purchase of material; or the vendor may have material on hand, for immediate fabrication, which can be used with little or no adjustment of tools and dies. Thus earlier deliveries are possible.

Rule 4. Type of Material: Low-carbon steel is usually the lowest cost material and should be chosen unless specific requirements necessitate some other material or unless some other metal, which may work more easily or cost less to finish, happens to yield a lower over-all cost. Of the many grades of steel, that which is cheapest in over-all results, including ease of working, but which still gives required results should be chosen. It should be remembered, however, that such factors as surface smoothness are often important, as they usually affect finishing and other costs which, in turn, affect over-all cost, frequently in a marked degree. It is well to specify not only the type of material but the analysis required. The grade should also be specified, since seconds, when their use is permissible, are sometimes available and can be purchased reasonably.

Rule 5. Grain of Metal: It is best to avoid designs in which bends and folds will be parallel to the grain of the metal, more especially in forming channel-type products. The grain of the metal always runs parallel to the length of the sheet or strip.

Rule 6. Direction of Grain: All channel-type products, those angle-formed and those bent over on themselves, either in flat or in double bends, should be formed, as far as possible, with the bends across the grain of the metal to minimize the chance of checks and cracks where the bends come. This should be considered, of course, when designing as well as when figuring what width of sheet and strip will prove most economical. Arrows in Fig. 18 show how the grain runs in sheet and how it should run in a channel, in a flat bend, and in a double bend.

Rule 7. Inside Radii at Bends: Inside radii at bends, whether straight or curved, should usually be not less than the thickness of the metal (Fig. 19). A larger radius than stock thickness tends to lower cost and is essential for hard and nonductile or tempered materials. In general, the larger the radius, the easier is production, especially when the radius is at the bottom of a drawn product. When the radii are specified less than stock thickness or a sharp corner, as in Fig. 20, is required, difficulty is encountered and the cost of producing goes up, as one or more extra operations or rehittings to flow the metal and sharpen the radius or eliminate it are required. Sharp bends tend to fracture or tear the metal. This may necessitate a change to more ductile and more costly material or require extra annealing as well as extra press operations. Tooling cost is also likely to be higher.

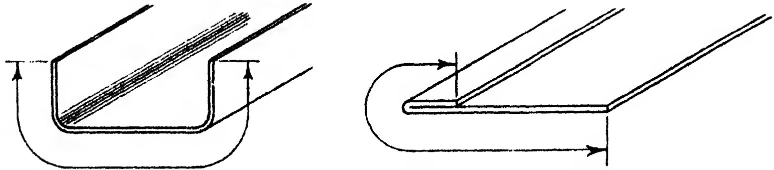

GRAIN OF CHANNEL GRAIN OF FLAT BEND

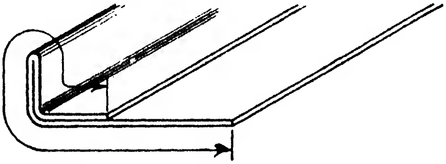

GRAIN OF DOUBLE BEND

Fig. 18.—Direction of metal grain is as indicated by arrows. It is preferable, especially for sharp bends, to make them across rather than parallel to the grain of the metal, as cracking is less likely to result.

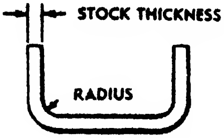

Fig. 19.—An inside radius equal to stock thickness is commonly the minimum recommended on formed parts.

Fig. 20.—An inside radius less than stock thickness or a sharp square corner, though sometimes feasible, should be avoided.

Rule 8. Radii at the bottom of drawn parts, whether cylindrical (Fig. 21) or of other shape, having a bottom or a web flange always should be as large as possible. Products of this nature are fabricated by drawing the metal between a punch and a draw ring or die. The punch stretches the metal in drawing it through the ring. Stretching causes the metal to become thinner on the flange near the bottom radius. If the inside radius is too small

(Fig. 22) the metal may just start, in drawing, to change from a flat blank and, instead of continuing on through the die, as desired, the punch (which has a radius equal to that desired inside of the stock) will pinch the metal (Fig. 23) and break out the bottom. The smaller the radius, the tighter is the pinch and the greater is the drag on the metal and the resultant stretching and thinning of the wall. Too small a radius is sure to break out the bottom, but a larger radius, as in Fig. 24, avoids this trouble. A small radius, as in Fig. 22, can be secured by performing operations with larger radii, which are decreased gradually, but this adds dies and operations and correspondingly increases costs. A radius *at least* four times stock thickness, as in Fig. 21, is generally recommended at the bottom of the drawn parts.

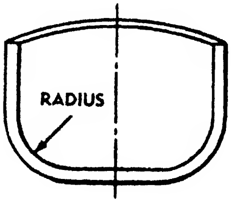

Fig. 21.—A large radius, preferably four times stock thickness or greater, at the bottom of a cup or drawn part is always recommended.

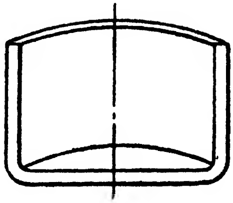

Fig. 22.—Drawn parts having a small radius at the bottom, as here shown, can be produced but only, as a rule, by adding extra operations, which require extra dies.

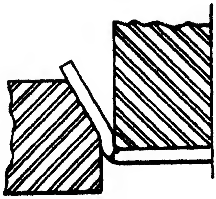

Fig. 23.—When the punch has a small radius, the metal has a tendency to pinch between the punch and die, rupturing the blank before it is drawn.

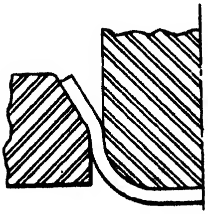

Fig. 24.—If the punch is well rounded, as here shown, pinching in the die can be avoided.

Rule 9. Radii under Flanges: Products that have top return flanges at or approximately 90 deg. to the side wall, as in Figs. 25 to 27, should have a radius under the flange not less than stock thickness. If the die radius is too sharp, regardless of the radius that the punch may have, the material will pinch and a ruptured part will result. It is always better to establish an inside radius at a return flange to suit the draw radius required on the die, because, if the radius specified is too small, an extra operation, namely, rehitting to size the radius, must be added and an extra die must be made for this purpose.

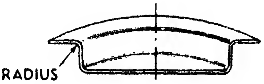

Fig. 25.—For small light-gage shallow-drawn parts, the radius under the flange should not be less than 1/16 in.

The following practice is recommended: On very light-gage metal for small shallow parts, as in Fig. 25, the radius under the flange should not be less than 1/16 in. On large parts with deep draws using 16 gage or thinner metal (Fig. 26), the radius at the draw edge should be between 1/8 and 5/16 in. For materials over 16 gage (Fig. 27) a radius under the flange of 1½ times stock thickness is satisfactory. These figures apply, of course, for ductile metal suited for deep drawing.

Rule 10. Connecting radii, as in paneling, embossings, or depressions, preferably should never be smaller than stock thickness; they should be larger, if possible. Metal between an upper and a lower radius should be at an angle greater than 90 deg. to the sheet, as in Fig. 28, not at 90 deg., as in Fig. 29. Considerable stretching of metal takes place in forming a recessed or raised area, and ample radii (in addition to a connecting slope that is not at 90 deg. to the face) tend to prevent any pinching action or tearing of the metal.

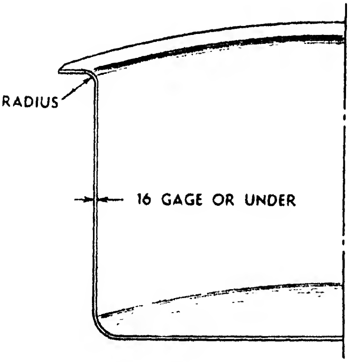

Fig. 26.—Large parts of 16-gage or thinner metal should have a radius under the flange of 1/8 to 5/16 in.

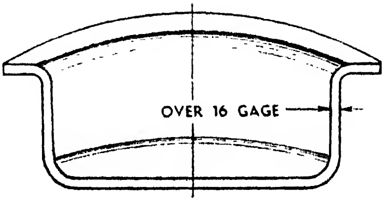

Fig. 27.—Drawn parts of ductile metal over 16 gage should have a radius under the flange not less than 1½ times stock thickness.

Rule 11. Inside corner radii joining the sides of rectangular or other straight-sided drawn stampings (Fig. 30) should also be as large as possible to allow the metal to pull down through the corners of the die walls without pinching or tearing. The length of these radii depend upon the gage and type of material used and the depth of the draw. On a draw 4 in. deep, using cold-rolled deep-drawing steel 0.037 in. thick, corner radii five times the material thickness are the minimum feasible. On shallower or deeper draws, a corresponding decrease or increase of the radii is permissible or necessary, but best results are secured when the radii are as large as conditions permit.

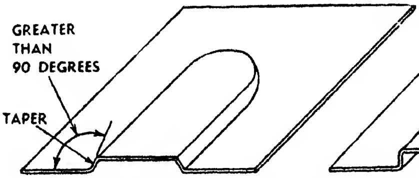

Fig. 28.—Side walls of depressions should have a draft or taper, making the angle indicated greater than 90 deg.

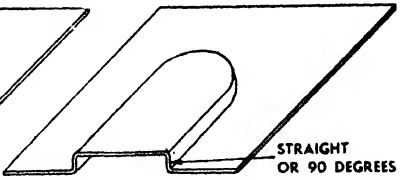

Fig. 29.—Side walls at 90 deg. to the face of dies for forming depressions are preferably avoided.

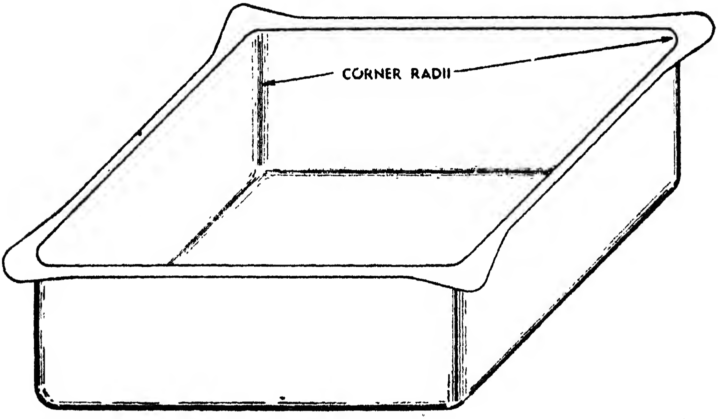

Fig. 30.—Corner radii joining the side walls of drawn parts should be large, five times metal thickness being about the minimum for ductile material in a part such as this.

In general it can be said that square corners or edges, where forming or drawing of the metal is involved, have no place in any but exceptional stampings, unless coining, which is expensive, can be resorted to and this usually is possible in relatively small parts only. The safest rule to follow is to keep radii as large as conditions permit and, when an unusually small radius appears essential, to specify this only after consulting experienced stamping producers to determine whether the radius is feasible without prohibitive cost.

Rule 12. Outside radii in corners and at bends are usually determined by the requirements for the corresponding inside radii and are equal, as a rule, to the inside radii plus metal thickness. Square external corners can be formed by coining but should be avoided unless absolutely essential. Liberal outside as well as inside radii are recommended, as they usually facilitate production and help to gain minimum cost.

Rule 13. Depth of Depressions: The depth of depressions and the height of pads should not be greater than is absolutely necessary. It is best for the depth not to exceed twice the stock thickness, although if a hole, pierced before forming, is permissible in the center of the pad or depression, this depth can be increased as some of the metal will be drawn from the relieved center portion.

Rule 14. Depth of draws, or the distance that metal is stretched by the punch at right angles to the die face, should be kept as small as conditions permit if cost is to be minimized. In general, the deeper the draw, beyond that possible in a single stroke of the press, the greater the number of operations and the number of dies required and the greater the cost. Drawing tends to work-harden most metals used in stampings and deep draws often require that the metal be annealed and sometimes pickled and cleaned between draws, operations that add considerably to costs and that cannot always be accomplished with light-gage materials. Deep drawing generally requires a highly ductile material that often involves increased metal costs.

Parts having a circular section are usually easiest to draw and also involve lowest die costs. It follows that, when a deeply drawn part is required, it should be designed with circular sections at right angles to the punch axis, if cost is to be kept at a minimum. When sections are not circular, the radii in corners should be as large as conditions permit.

For a given diameter, the deeper the draw, the larger is the blank required and the greater the cost of material. Large blanks are expensive and involve large scrap losses, also adding to over-all cost.

Despite these adverse factors, deep drawing is often a highly economical method and frequently is the only method possible for low-cost production of a large range of parts. Draws as deep as the diameter of the punch usually cannot be produced in a single draw but commonly require two or more operations after blanking and necessitate a corresponding number of dies. There are no fixed rules for determining the number of draws, but for ductile materials to be converted into a deep cylindrical shape in a single draw, the punch area may approximate half the blank area (see Fig. 31). If the sectional area of the punch exceeds 40 to 50 per cent of the blank area, one or more redraws may be needed. In redrawing, the punch area is commonly 15 to 30 per cent less than the area of the piece to be redrawn (see Fig. 32). As Figs. 31 and 32 indicate, drawing converts a part of the blank into a cylinder (if the punch is of circular section) and redrawing forces still more of the metal flow into a cylinder of smaller diameter. Drawing stretches the metal as it is drawn over the rounded edge of the die. There is a definite flow of metal and if either the punch or die has radii that are too small, the metal will be torn or ruptured, as previously indicated. For this reason, the radius at the end of the punch (which is, of course, the radius at the bottom of the draw) should be generous, as already explained.

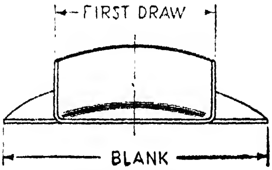

FIG. 31.—In general, the area of the punch for a single deep draw in ductile material may approximate 50 per cent of the blank area.

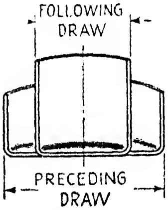

FIG. 32.—In redraws, a punch having an area 15 to 30 per cent less than the area of the piece can be used, as a rule.

Rule 15. Shape of Drawn Parts: Although it is possible to draw parts having curved rather than flat bottoms or even bottoms of hemispherical shape, a punch correspondingly shaped (Fig. 33) may tend to rupture the bottom or produce wrinkles.

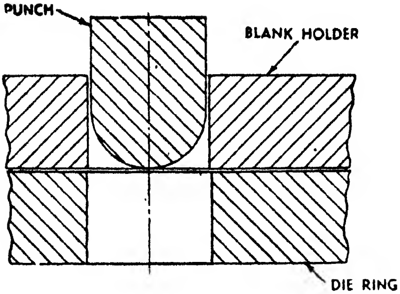

FIG. 33.—A drawn part made with a punch of hemispherical shape (the end of which hits the blank far from the die) tends to produce a part with a wrinkled bottom.

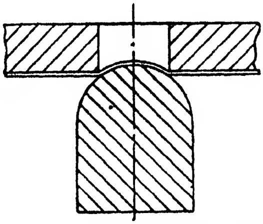

FIG. 34.—Wrinkles can be avoided by starting a shallow draw with a die in which the distance from the die wall to punch contact is decreased.

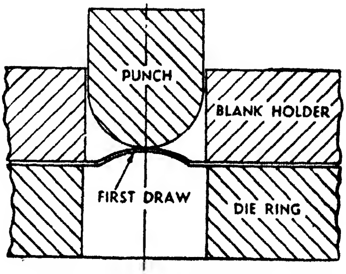

FIG. 35.—After the shallow draw is made (Fig. 34) the piece is inverted as here shown and then is given a finish draw. This "skin-the-cat" method tends to avoid wrinkles.

There are, however, expedients for avoiding such faults (such as are shown in Figs. 34 to 36) but they involve extra dies and extra operations. It is thus a good rule to avoid specifying drawn parts having hemispherical or deeply curved bottoms unless the benefits gained offset the higher production costs.

Deep drawing of parts of irregular shape, such as automobile fenders, for example, though often done with marked success, is likely to require much expensive research or cut and try before success is attained (if realized at all). Such deep-drawn parts are advocated only when experience indicates that success

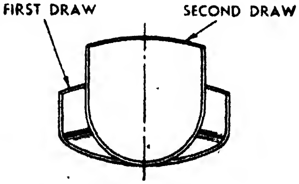

FIG. 36.—If the piece is drawn first with a shallow crowned bottom, as here shown, the second draw, to produce the finished size, also tends to reduce or avoid wrinkles.

is likely to be realized at a cost commensurate with benefits attained. If parts of similar size, shape, metal thickness, and type of metal are known to have been drawn successfully and with reasonable cost and an equally ductile material is to be used by a company having the necessary experience, the chance of success is much greater than if any such factors are absent. Metals that are not sufficiently ductile at normal room temperatures to permit of deep drawing can sometimes be drawn hot or after suitable annealing but the extra costs involved in the added operations named should not be incurred unless economically justified.

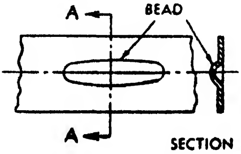

Fig. 37.—A bead, such as is here shown, or one which is much longer, is often employed to stiffen a sheet that, if left flat, would be too flexible.

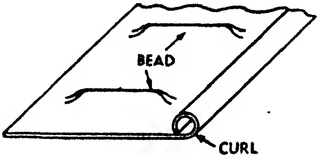

Fig. 38.—The beads here shown add transverse stiffness to this stamping and the curl at the edge stiffens the piece along the axis of the curl.

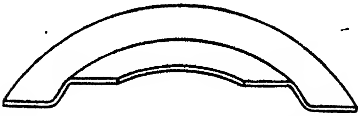

Fig. 39.—A flange thrown up around a lightening hole adds greatly to stiffness.

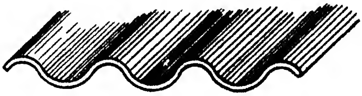

Fig. 40.—Corrugations add greatly to stiffness or resistance to bending across, but not to bending parallel to the corrugations.

Many stampings require drawing or forming operations ranging from shallow to fairly deep over a part of their area, as, for example, in producing depressions or ribs to stiffen an area which, if left flat, would be too flexible or perhaps give rise to drumming or "oilcan" effects. Such parts are shown in Figs. 37 to 39. Depressions (or even corrugations, Figs. 40 to 42), however, require stretching or flowing of metal and the design must be such that the flow can take place without rupturing the piece. A pair of parallel depressions are often feasible if radii are not too small and there is sufficient metal adjacent to the depressions to permit the draw, but, if a third depression or bead is called for between the two, the metal may lock in the outer pair and be ruptured in the central depression for lack of material to flow into the latter. In some cases a series of depressions or corrugations can be made easily, one at a time, in succession, as indicated in Fig. 42, where, if an attempt were made to form them all at one closing of the die, the piece would be ruptured.

The edges of stamped parts are often stiffened greatly by the addition of flanges or return flanges, as in Figs. 43 and 44. An offset or flange around a lightening hole (Fig. 39) stiffens the piece greatly. A rib formed, as in Fig. 45, is often used to stiffen the side walls of a channel section.

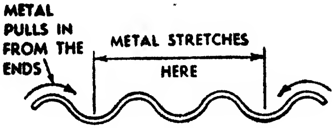

FIG. 41.—A die can form two parallel corrugations when the metal is allowed to pull in from the edge, but to form a third corrugation between the two stretches and is likely to rupture the metal.

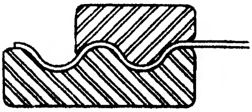

FIG. 42.—Rupturing can be avoided by making parallel corrugations one at a time in succession, as here indicated, whereas an attempt to form several such corrugations simultaneously is likely to rupture the metal, as much stretching of the metal is required in the latter case.

FIG. 43.—A flange formed at the edge of a stamping stiffens it materially.

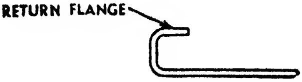

FIG. 44.—A return flange adds still greater stiffness than one involving (as in Fig. 43) only a single bend.

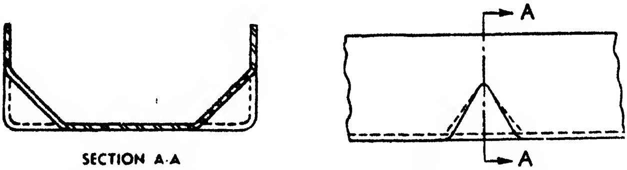

FIG. 45.—Ribs formed across the bend of a flange or channel shape, as here indicated, add stiffness against bending the flange in reference to the web or face of a stamping.

Whenever drawing or forming is to be done, whether for a rib or for a much deeper part, it is necessary to provide sufficient metal to flow into the shape required, whether the metal comes from the outer area of the blank as in drawing a cup (Fig. 31) or as a result of enlarging a hole (Fig. 39). Unless this is done, the piece is likely to rupture or to be drawn so thin at some points as not to be usable.

Rule 16. Irregular or special-drawn parts involve a variety of problems that cannot be dealt with in detail in a brief chapter. A part such as that shown in a die in Fig. 46, for example, being shaped largely by the crowned punch, tends to make a stamping which is irregular and unsightly on the sides and in the corners because the drawing begins at the center of the punch and metal flows toward the corners. A smoother and better looking stamping results when drawing takes place uniformly between the die and the punch, as in Fig. 47.

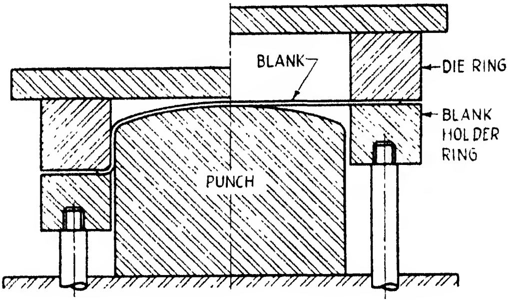

Fig. 46.—In a part which is shaped, as in this case, largely by the punch and in which drawing starts at the center, an irregular and unsightly appearance is likely to result.

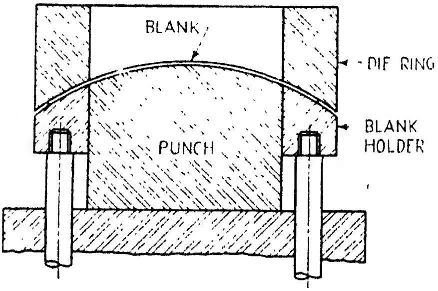

Fig. 47.—A part shaped as here shown is likely to be smoother in appearance than one formed in the die shown in Fig. 46 because the metal flows over the full area of the curved portion of the die.

Most stampings for long-production runs are made with a solid steel punch, which, of course, clears the die by an amount approximately equal to the thickness of metal to be employed. Unless the die is split, such a punch must enter the hole in the die and so cannot be larger than the hole. It is possible, however, to employ a flexible-rubber punch, which, after entering the drawn part, is made to expand and force metal in side walls into undercut recesses. When the pressure is relieved, the punch contracts in diameter and clears the piece, but the latter will not clear the die unless the die is split (see Figs. 48 and 49).

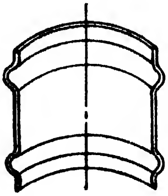

Fig. 48.—A drawn cylinder can be formed to produce a part having the section here shown (only half of the cylinder is pictured) in a split die by using a rubber punch to expand the circumferential ribs, as in Fig. 49.

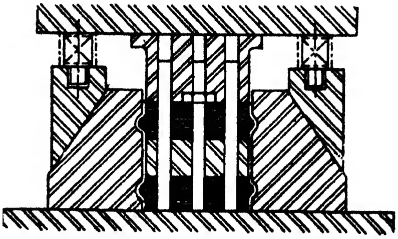

Fig. 49.—A split die, as here illustrated in section, can be used to form a cylindrical part with expanded circumferential ribs, if a rubber punch of proper design is employed.

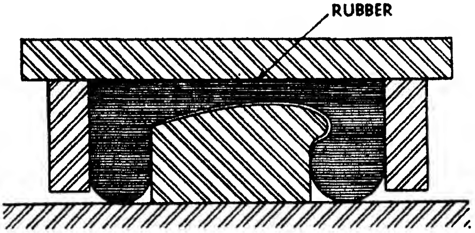

Fig. 50.—A solid punch or form having an undercut, as here shown, can be used to shape a part such as a wing leading edge (Fig. 51) if a box in which rubber is confined is used in place of a rigid die.

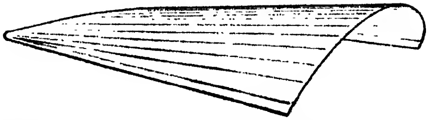

Fig. 51.—Wing leading edge formed in a die such as that shown in section in Fig. 50.

Conversely, if a solid punch has an undercut, as in Fig. 50, it can be made to form an undercut part, such as the wing leading edge (Fig. 51), if the die is made of rubber confined sidewise in a box but allowed to flow around the punch (with the work between it and the punch) in forming the piece. This method of forming and/or drawing a part over a male form or punch (which latter need not be undercut, of course) without a mating cavity in a solid block or die is widely used in aircraft-part production and is known as the "Guerin process." If the punch or form has an undercut, as in Fig. 50, it must be of such shape that it can be cleared, that is, so shaped that the piece will come free.

Rule 17. Notched Parts, Drawn or Formed: When notches are required in stampings, they should be so designed as to eliminate extra operations and to simplify manufacture. In drawn or formed parts the metal flows to such an extent that any notch put into the blank or sheet before drawing or forming may cause the stamping to break, tear, or distort; hence, on this class of work, it is usually better not to notch until after the stamping is completely drawn or formed. Exceptions depend on the design of the stamping and on the location of the notches. If the notches are close to the edges of the flanges and the drawn portion misses the notches, a die can be built to notch and trim while the piece is in the shape it assumes (Fig. 52) as a result of the first draw. Notching and trimming are then done, as in

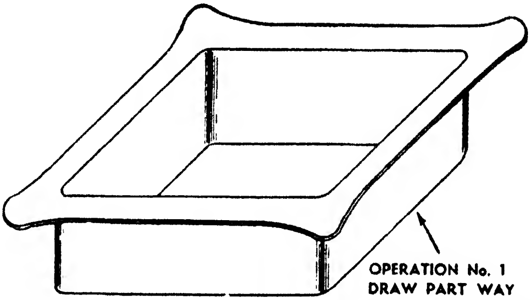

FIG. 52.—Stamping at the end of first draw, ready for notching of the flange.

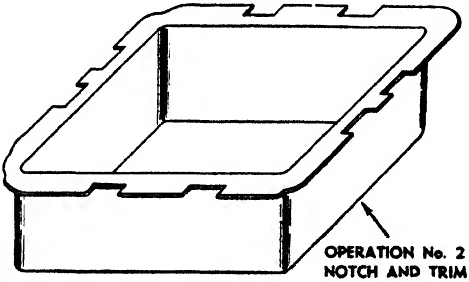

FIG. 53.—After drawing, as in Fig. 52, the flange is notched as here shown.

Fig. 53, and have to be followed by a redraw to give the piece the required depth and to bring the notches that were made in the flanges into required position, as in Fig. 54. In such cases, developments and tryouts to ensure the desired final notch location usually have to be made to allow for metal flow, as the latter is not always predictable and depends upon the shape and character of the drawn part. Designers who are not familiar with practice of this kind should discuss the design with a stamping manufacturer and try to bring notches and holes in such position that extra operations and extra dies (such as may be required if the notches or holes have to be made after the final draw) are avoided.

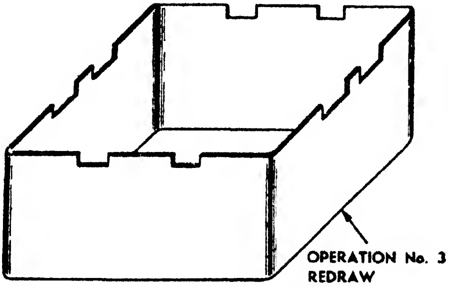

FIG. 54.—Same stamping shown in Figs. 52 and 53 after it has been redrawn, the notches having been cut before the redraw.

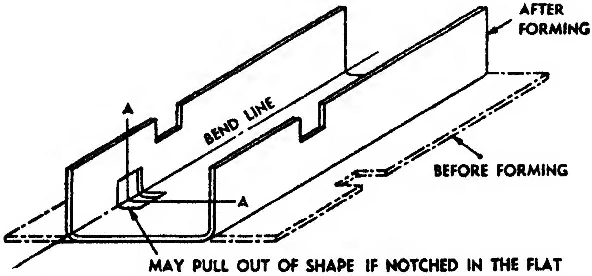

FIG. 55.—When distortion of notches and holes can be avoided, the notches and holes are done in the flat, as indicated by dotted lines.

When designing notches in parts such as are named in class 2 for straight channels, angles, curls, double folds, or bends, it is well to remember that notches are put in by two methods. In the first, which is most generally used, notching is done in the flat (Fig. 55). The material is usually sheared to size, if edges are square, and then is notched and, if holes are required, is pierced, after which bending, forming, or folding operations are performed. For large-quantity production, where extra die cost is offset by reducing individual operations of notching, trimming, or perforating, dies are designed to combine as many of these flat-sheet operations as possible, but for small-quantity production, where a high die cost is not justified, the designer should consider the shape and size of the notches required with due regard to some fabricating company's standard dies. Such a manufacturer uses more operations to manufacture the stampings, raising the price slightly, but keeps the die cost for notching at a minimum. When designing for this type of production, the designer should keep the notches and holes well away from any bend lines if possible. At the edge of the piece and away from bend lines, notches may not be affected by the forming, but any holes or notches that are near the bends (Figs. 56 and 57) may cause weakness at these points and result in bent or distorted flanges or in holes or notches that are distorted. Tolerances of not less than $\frac{1}{64}$ to $\frac{1}{32}$ in. should be specified to allow for variations in the location of holes and notches in formed parts, as there are bound to be variations that are difficult or impossible to hold within narrower limits.

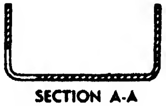

FIG. 56.—A hole near a bend, as here indicated, may result in weakening the stamping and in distortion of the hole, as the latter is pierced before forming.

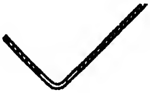

FIG. 57.—Notching or piercing after forming, as here indicated, tends to avoid distortion of the piece and of the hole or notch.

The second method, notching after forming, is a more accurate one but usually involves greater die cost. If notches are required to run through the bend line of a formed stamping, the latter is set up on an angle, as in Fig. 57, and both flanges are notched in one operation. This, of course, cuts the edges of the notch at an angle to the flanges, that is, parallel to the motion of the punch, and an allowance may have to be made to provide clearance for any unit that may have to be assembled where the notches come.

When a notch comes at a corner or a corner has to be sheared off at the edge of a bend as in an angle or a channel (Fig. 58), true forming is difficult, as the metal tends to pucker at the bend, especially if heavy-gage metal is used, if the forming is done after shearing or notching. In such cases it is much better to keep the notch or shear line away from the bend, as in Fig. 59, or to form before shearing or cutting the notch. The shear or notch is preferably kept beyond the point where the radius of the bend starts. Sometimes drawings show the shear or notch in such position as to leave a mitered edge through thickness of the material, even though this may not be necessary. In this case, the estimator has to figure on machining the edge (at considerably increased and perhaps unnecessary extra cost), as shearing at an angle is not feasible.

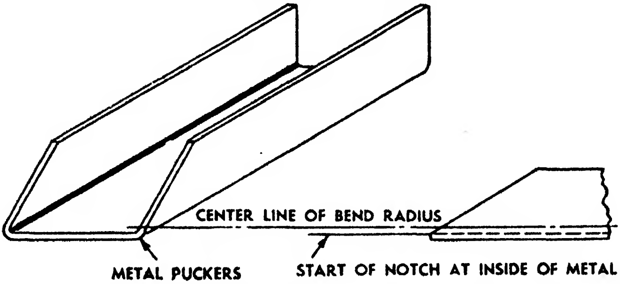

FIG. 58.—Metal, especially in heavy gages, tends to pucker at the bend if the corner has been sheared off, as here indicated, before forming.

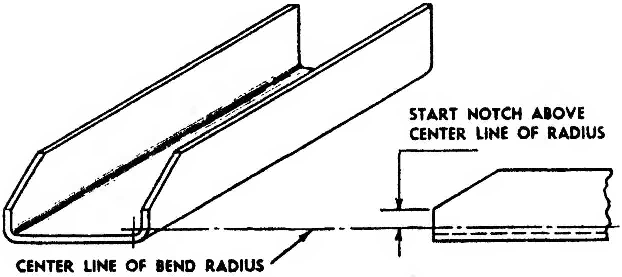

FIG. 59.—If shearing is to precede forming, it is better to keep the start of the shear or notch well away from the bend.

Rule 18. Holes and Slots: Holes are pierced in stampings by one or more of the following methods:

a. Perforating in the flat, in conjunction with blanking. This is known as a "blanking and perforating."

b. Perforating in flat square-sheared blanks, which may or may not be formed later.

c. Perforating after the stamping is completely formed or drawn.

d. Perforating in conjunction with trimming, commonly termed a "perforating and trimming" operation.

e. Drop-punch method, which usually involves using a jig made of strap steel, welded or screwed securely together with bushings of correct hole size, properly located. The jig is made to fit around the blank and is clamped in place. This is then placed over a stock die unit having a punch arranged to drop into the bushings of the jig, which locates the punch before the press is tripped and the hole perforated. One hole is perforated at a time.

f. Another method of perforating one hole at a time is sometimes applied in light-gage metal that has undergone a drawing or forming operation during which locating blisters, or indentations, are made in those positions where the punch is subsequently to perforate a hole. A locating pin or finder having a cone-shaped insert is arranged so as to rise on the metal protrusions that act as finders for the hole centers. The centers are placed over an inverted punch having a tip to match the finder, and when the hole is perforated the slug moves upward into the die and finally finds its way into a container. No jig is required.

Although these methods of piercing holes do not directly concern the designer of the stamping, a knowledge of them may well affect over-all cost since die cost is affected by the one chosen. When no die is required or a stock die can be used, die costs may be lowered but over-all cost may not be decreased, as the process may be slower than when a special die is employed.

Naturally, the first and fourth methods, *a* and *d*, are lowest in cost, since the perforating is combined with other operations that are essential to the manufacture of the product, but such combination operations are not always feasible because of the nature of the stamping.

Rule 19. Hole Location: In designing stampings, the designer should consider the following points in locating holes and determining size and limits, especially for large-quantity production, low piece price, and low tooling cost:

The distance between the outside of a hole and the outside edge of the stamping or the distance between the edges of two holes on 16-gage and heavier metal should be at least two times the stock thickness of the material used (Fig. 60). For metals under 16 gage, this distance should not be less than ⅛ in. These rules apply whether the part is to be perforated before or after forming. If the holes are closer than noted, the wall thickness of the die between the holes may not be sufficient to stand the pressure applied to perform the piercing in one operation. To ensure against frequent die maintenance, extra operations in a second die may have to be added.

When holes are put into a stamping, the bend lines and the radii at each side of them always should be considered, whether

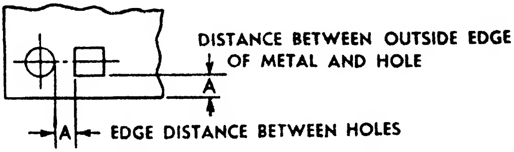

FIG. 60.—Distance between the edges of holes and between the edges of a hole and the edge of the sheet should be at least twice stock thickness on 16-gage and heavier stock and ⅛ in. minimum for stock under 16 gage.

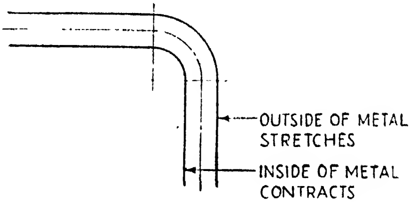

FIG. 61.—When metal is formed, it stretches on the outside of the bend and tends to contract inside the bend.

perforating is done before or after forming. Metal flows at bends (Fig. 61), hence holes should be kept as far away as possible from any bend, if stretching or distortion of the hole while forming is to be avoided. When perforating after forming, it is always better to gage from the inside of the metal. If the edge of the hole is at least two times stock thickness, away from a line through the center of the radius perpendicular to the metal face of the radius (Fig. 62), this provides enough wall thickness between the edge of the hole and the edge of the die.

Rule 20. Hole Diameter: Pierced holes having a diameter less than stock thickness should not be specified. If holes are less than stock thickness, they usually have to be drilled, and drilling is much more expensive than perforating. Hole diameter can be held fairly accurate on the punch side. On the die side, it is slightly greater because clearance is allowed between the punch and the die (Fig. 63).

Hole diameters are determined in part by the use to which the hole is put. If the hole is for a cold rivet, 1/64 in. clearance over the nominal rivet size is generally allowed. The clearance for a bolt is between 1/64 and 1/32 in., as a rule, but for aircraft work the clearance is much less. A tolerance of at least ±0.005 in. should be allowed in specifying the distance between hole centers.

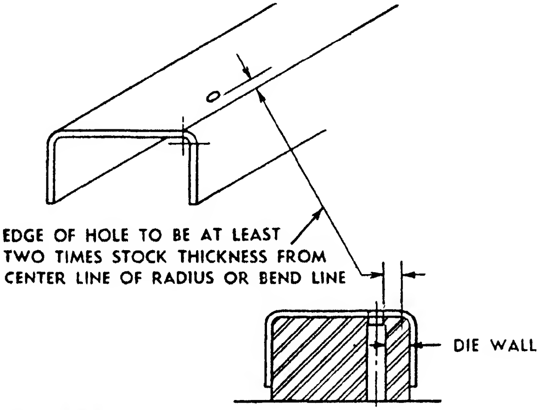

FIG. 62.—The edges of holes should be kept away from a line normal to the metal face and through the center of the radius at a bend by an amount equal to at least twice stock thickness.

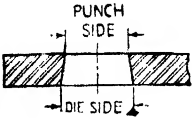

FIG. 63.—A punched hole is usually slightly larger on the die side because the die hole must be slightly larger than the punch to provide clearance.

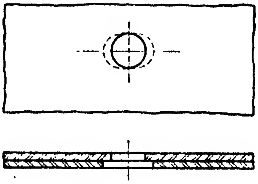

FIG. 64.—Assembly is often facilitated, when close fits are not essential, by providing slots or larger holes in one of two mating parts.

Where bolts are to be used in an assembly, where close fits are not required, and where variations in center distances are not important or are difficult to control, it is good practice to use holes in one piece and slots or larger holes in the mating stamping (Fig. 64) providing the parts are not stressed, as this may facilitate assembly and decrease costs, because less care is required in holding center distance and less die maintenance is needed.

Rule 21. Extruded holes are those in which the punch does not shear away the metal but pushes it outward so as to form an integral flange or collar around the hole. The length of an extruded hole is considerably greater than metal thickness and can be made several times as great. This type of hole is used for any of the following in gages of materials up to $^5/_{16}$ in. or greater:

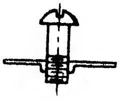

FIG. 65.—Extruded hole for screw thread.

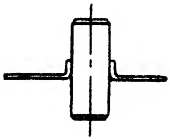

FIG. 66.—Extruded hole for a pin, bolt, stud, shaft, or bushing.

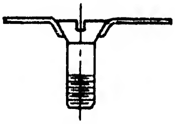

FIG. 67.—Extruded hole for a countersunk screw or rivet head.

a. For sheet metal or machine screw threads (Fig. 65).
b. To fit pins, bolts, studs, shafts, or bushings (Fig. 66).
c. For countersunk screw or rivet heads (Fig. 67).
d. For butt welding, brazing, or soldering to tubes or shafts (Fig. 68).

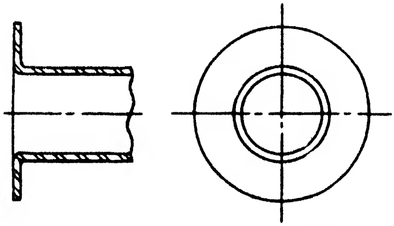

FIG. 68.—Extruded hole having a flange to which a tube or shaft is to be welded, brazed, or soldered.

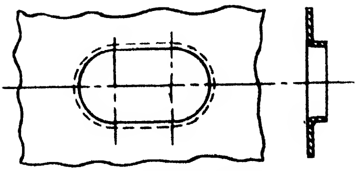

FIG. 69.—Extruded hole for clearance or lightening in which the flange adds stiffness.

e. For clearance holes and lightening holes, especially where stiffening or added strength is required around the hole (Fig. 69). Such holes can be of almost any shape that does not involve sharp corners.

f. For other parts to slip into when assemblies are made (Fig. 70).

For such holes, the designer should consider how high a flange is necessary and where the metal that is to be extruded or flanged is coming from. Metal can come, ordinarily, only from the area inside the hole, but, if the metal required for the flange is too great to come from the center, it has to be drawn in from the area around the hole by means of one or more pocketing operations, before punching out of the center and flanging.

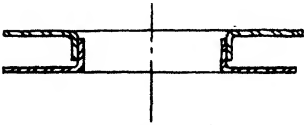

Fig. 70.—Extruded holes in two parts designed for telescoping.

The operation of extruding a hole usually involves first punching out the center and then flanging. Sometimes a single operation both perforates and extrudes, depending on the gage of material, the size of the hole, and the height of flange. This works out satisfactorily for light-gage metal on types of holes such as those in Figs. 65 and 67.

The inside diameter of the extruded hole can be held close to size, but the wall at the raw edge of the flange thins considerably and sometimes checks or cracks. This may or may not be objectionable, depending upon the particular application. If it is essential to thicken the wall, as is sometimes necessary for tapping certain threads, this can be accomplished by extruding the flange higher than required and then stoving back the metal, to yield, within certain limits, the desired wall thickness. Such stoving can be done cold if the metal is not too heavy and press equipment of proper tonnage is available. Sometimes hot operations are required. Generally, cracks or checks can be eliminated by a reaming operation after punching, if the hole is round.

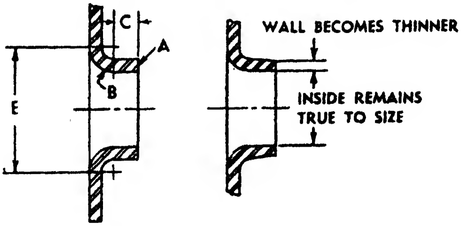

Fig. 71.—Extruded hole having a straight flange height *C*.

The procedure the designer should follow when designing an extruded hole for economical manufacture and tooling is first to determine the size of the hole required and then arrive at the minimum flange height that can be used. Next he should check the areas to ascertain whether the metal required will come out of the center and still allow more than stock thickness for a perforated hole as shown in Fig. 71. If the area of the extrusion (equal to the area of a cylinder *A* and that of one-fourth of annular ring *B*) exceeds the area of circle *E* and the drawing of metal from the outside is necessary, much extra tooling is required and extra development expense is often involved.

Rule 22. Lanced holes are formed by shearing the metal partway around the periphery and then bending the metal adjacent to that sheared. A tab, as in Fig. 72, for example, is sheared on three sides and bent outward on the fourth side, forming a projection at an angle but integral with the original metal. Often the center of the projecting portion has a hole perforated for a wire, screw, or other fastening. Projections of this type are frequently used instead of attaching another small piece bent at an angle to the stamping, as in Fig. 73. Lancing and bending are much less expensive than to form a separate piece and weld or attach it by other means, but the hole may weaken the stamping and may afford a less sightly result than the alternative. A lanced hole and tab can be produced in one operation, but the metal will have a clean sheered edge on three sides up to the points where the bend starts, but beyond, where the cutting edges of the punch and die end at the bending

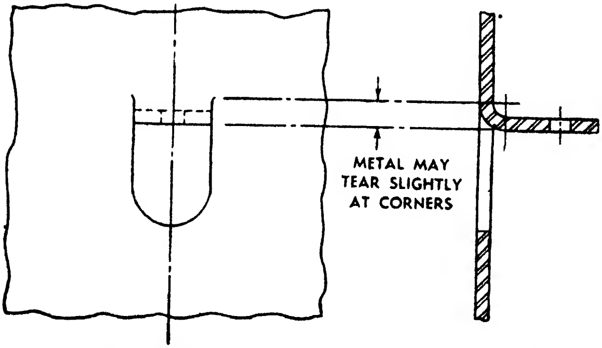

FIG. 72.—Tab that is sheared on three sides and formed or bent outward.

radius, the metal tears slightly because the bending is done before the cutting punch completes its stroke.

Rule 23. Louvers are commonly lanced and formed in one operation. They are usually formed on three sides and lanced on the other. The two ends of the louver bend and are stretched adjacent to the lanced edge. Louvers are most commonly used for vents, but finger lifts, shelf rests, separators, or card pockets are formed in the same manner. Louvers can be lanced and formed either one at a time or in groups, but the forming should not be too deep, as the metal at the ends is likely to tear severely, making for unsightly appearance.

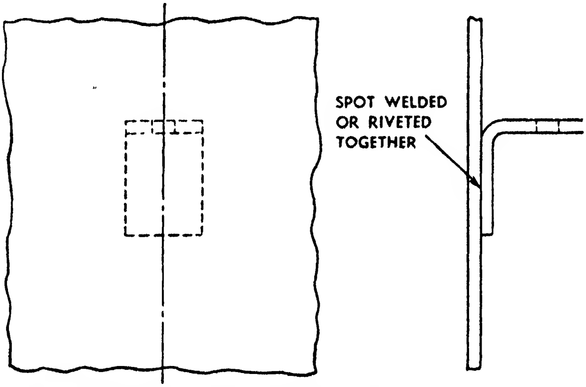

Fig. 73.—Tab formed separately and welded or riveted in place.

On light-gage material, better louvers are formed if cuts are spaced not less than ½ in. apart with a flat or bend line ⅛ in. away from each cut (Fig. 74). On material over 16 gage, it is better to allow 1¼ in. minimum between cuts, with a flat bend line ⅜ in. away from each cut. The length of the louvers is usually from 4 to 6 in. but can be much longer. Depth from the outside of the louver lip to the face of the blank is preferably not over twice the thickness of the stock. When spaced in rows, good tooling requires that at least 1 in. should be allowed between rows and that lancing should not come closer than 1 in. to the edge of the stamping.

Rule 24. Tolerances: The widest tolerances permissible should be allowed on all dimensions, as this facilitates rapid production and tends to lower costs. This applies especially to over-all lengths, widths, depths, heights of flanges, diameters of formed or raw edges, and distances between hole centers. Where parts mate with other parts of an assembly, tolerances should never be closer than are held on that part. Important fractional tolerances should be specified to $\pm\frac{1}{32}$, $\pm\frac{1}{16}$ in., or whatever limits must be held. Closer limits, when required, should be given to plus or minus the number of thousandths of an inch considered essential. Unnecessarily close dimensions tend to increase cost without any compensating gain. Springback of metal being stamped and wear on tools often greatly affect the limits that can be held. Extremely close limits, though sometimes possible on certain dimensions, may result in greatly increased costs.

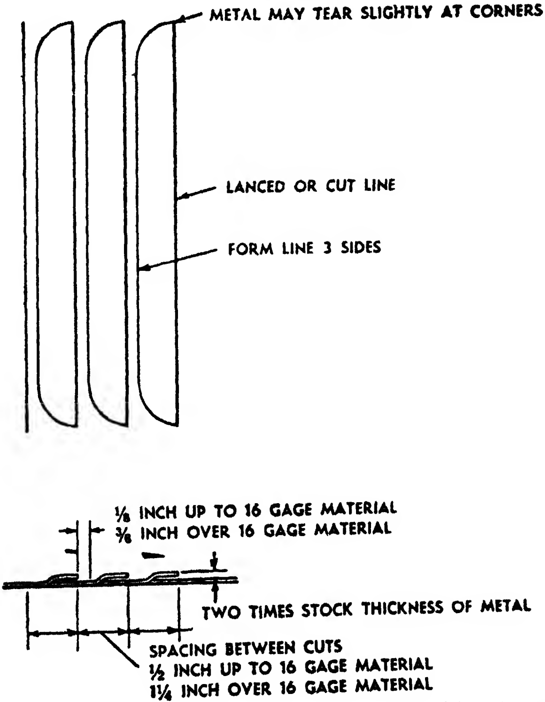

FIG. 74.—Louvers formed in sheet stock can be lanced at $\frac{1}{2}$-in. intervals on thin stock, up to about 16 gage. For thicker material $1\frac{1}{4}$-in. spacing is advocated.

Rule 25. Fits: When fits are involved, as between two stampings that must mate within close limits, both stampings should be produced by the same stamping plant, as otherwise the desired limit may not be held. In any event, the limits that control the fits should be definitely indicated for both parts on the same drawing.

Rule 26. Clearances: It is good practice to draw, in construction lines, at holes or notches, for example, the part or portion that must be cleared and to put on the drawing some such note as: "Clearance hole or notch, size not important," or, if clearance must be close, a note giving, in fractions or so many thousandths of an inch, the clearance desired. This tells the manufacturer how far he may go in simplifying tooling. He may even be able to use an available die, thereby saving on tooling costs.

Rule 27. Flatness: When the degree of flatness of any surfaces of a stamping is important, the degree or allowable variation from flatness should be definitely stated, as springback in metal and other factors affecting flatness are sometimes difficult and expensive to control. A note on the drawing should read: "This portion must be flat within (say) 0.030 in." or "When laid on a surface, plate with this surface down, a feeler thicker than . . . in. (expressed in so many thousandths) must not pass under the surface at any point." When no such note appears, it is general practice to assume that whatever the tools and metal normally give is satisfactory to the purchaser.

Rule 28. Straightness, as applied to edges or straight bends, for example (in which camber, spring in the metal, or some other variation from a straight line is objectionable), should be designated, when it is essential, by indicating, in thousandths of an inch, the maximum deviation from a true straight line that is permissible. In some cases it is better for the user to do his own straightening as parts straightened by the supplier sometimes warp in shipping and thus involve double expense for straightening.

Rule 29. Edges: In formed or drawn stamping on which the shape and location of edges are not important, this fact should be made clear on the drawing. Otherwise, trimming operations that are not necessary may be performed because it is not clearly understood that any considerable deviation from the contour shown on the drawing is permissible.

Rule 30. Burrs: When holes are drilled or when material is blanked or sheared, some burrs are bound to occur. If they must be removed, the drawing should clearly indicate where. When edges must be rounder (or broken), this, too, should be clearly indicated, as tumbling, filing, or some similar extra operation is then required.

Rule 31. **Coining** is the stamping process in which metal is caused to flow, not as a result of drawing it over an edge, but by the application of extreme pressure or impact, as in forming an imprint on a coin. In coining, the work is made thinner in some areas, from which the metal flows, and thicker in other areas into which the metal is forced to flow. In reality, coining is a form of forging that is commonly done cold, although the metal can be heated. The work is not done by a hammer, as in forging, but in a stamping press or in a special coining press. Except when a very soft ductile metal is used, however, the unit pressures applied must be very high and, for this reason, such pressures are commonly applied only to quite limited areas.

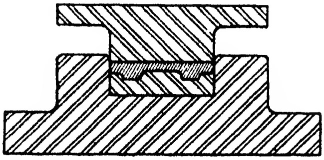

Fig. 75.—Coining die in which the metal in a flat blank is forced to flow and form sections some of which are thicker than the metal in the blank.

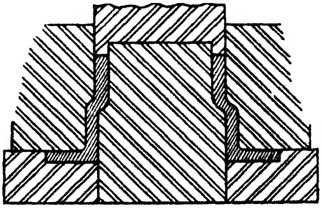

Fig. 76.—Another type of coining die in which metal flow is caused by a punch in such a way that some upper sections of the part, first drawn to approximate shape, are made thicker than in the blank. This type of coining is sometimes called "stoving."

Figure 75 illustrates one form of coining die. Another form (Fig. 76) employs a punch that passes through the piece. The latter is of such shape that some preliminary drawing operations are required. There is, however, some change in section thickness, and the forming of the stepped diameter involves a considerable flow of metal. In this, as in most coined parts, the metal is completely confined within the die cavity, the shape of which it is forced to assume by the high pressures imposed. Some forms of coining are sometimes referred to as "stoving."

In producing many coined parts, the flow of metal required is so great that several successive operations in separate dies, applied in succession, often with annealing between operations, are required. To minimize cost, the total flow of metal required should be as small as conditions permit and the most ductile metal that will meet requirements, costs considered, should be chosen, especially as coining results in rapid work-hardening.

Relatively few stamping producers have extensive experience in coining. In developing a new design of coined part it is well to consult a manufacturer who specializes in coining or who has had experience in producing a similar coined part before finishing the design of the part, as his suggestions are likely to avoid details of design that tend to increase cost unduly and may be of great assistance in perfecting a design well adapted to coining at minimum cost.

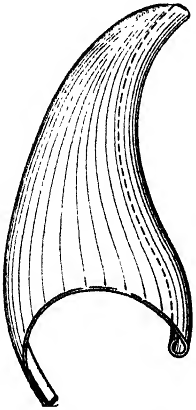

FIG. 77.—Automobile fender having a curled edge. Such curls are usually formed by rolls rather than in a stamping press.

Rule 32. Supplementary Operations: Not all operations in the manufacture of stampings can be accomplished by press-working. Figure 77, for example, shows the curled edge of an automobile fender, which has an irregular contour. The production of such a curled edge in a press generally proves to be impractical or is produced more economically by running the piece through curling rolls, during which operation a wire for stiffening is often added inside the curled edge. Crimped or corrugated edges, as shown in Fig. 78, are produced by crimping rolls which, at small cost, can be changed to suit a number of different sizes and stock thicknesses. Figure 79 shows a stamped part that has been threaded by rolling. Lathe attachments have been made to roll such threads for small quantities, but special thread-rolling machines are commonly used for long runs.

Flat blanks or cylindrical, hemispherical, saucer-shaped, and similar stamped or drawn parts are often further processed in a lathe by spinning over a male form of either wood or metal. While the work is revolved a suitable tool mounted on the tool rest is applied and works the metal over the form to the desired shape. Spinning is often done on short runs of parts, especially where tool costs would be prohibitive if the entire job were done in press dies. In some cases, the dimensions held are closer than for drawn parts. It is also possible to neck parts over collapsible forms when the same shape could not be produced by drawing or shaping in positive dies.

Punchings called "knockouts" are sometimes left in stampings, the slug that has been produced by the punch being pushed back into place, leaving a surface that, except for the cut line, is flush with the surface of the surrounding metal. Knockouts are commonly used in steel boxes for electrical circuits and are knocked out, when the box is installed, at points where conduits are led into the box from one or more sides. Such boxes are commonly designed with several knockouts. Those not having to be knocked out remain in place, leaving surfaces which serve the same purpose as if the holes were not punched. Figure 80 illustrates successive steps in producing a knockout-box part in a progressive die.

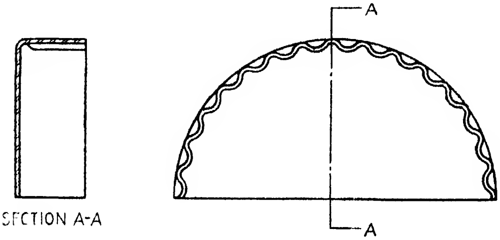

FIG. 78.—Stamping having an edge that is formed by crimping rolls.

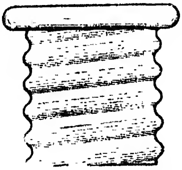

FIG. 79.—Stamping that has a rolled thread

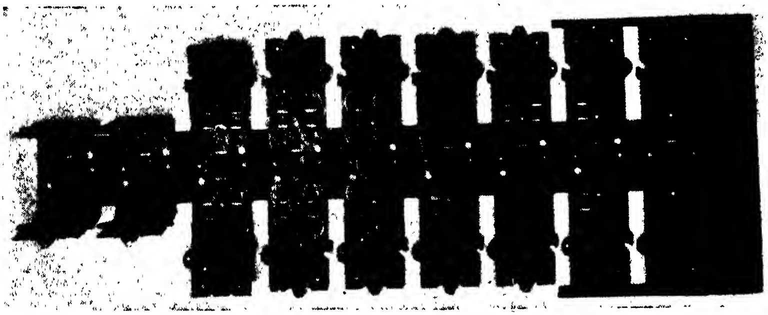

FIG. 80.—Successive steps in producing, by stamping, parts for a knockout box such as is used in electrical wiring systems.

In designing products of this nature, the designer should remember to keep the holes well away from flanges and the edges of the metal, as shown in Figs. 60 and 62, so that the surrounding metal will not be distorted while the knockout is being formed. In most cases, the holes are not sheared through the full circumference, but the metal is left continuous at one or two spots where the metal is broken later when and if the slugs are pushed out.

Occasionally, where a small boss must be thrown up on a stamping, a slug is punched only halfway through and is left in the hole but projecting half the thickness of the slug. The projection thus formed may serve to locate some mating part but (since it is held only by friction, unless not sheared through the whole periphery of the punch) it should not be depended upon to resist heavy stresses. Bosses of this type are useful chiefly when fairly heavy-gage metal is employed.

Rule 33. Applied Finishes: If stampings are to receive an applied finish, it should be clearly specified whether cleaning and corrosion-preventive treatment are required and what kind and color of primer and paint are to be used. If a definite color or shade is not important and another can be substituted, this should be noted. If a particular method of applying is necessary, it should be stated whether the part must be brushed, dipped, sprayed, baked, or crinkled.

Rule 34. Use: It is advisable to state clearly what the part is and where and how it is used. An assembly drawing provided along with the part drawing is helpful to an estimator, as indicative of use and to show where fits with mating parts must be considered.

Rule 35. Appearance, especially of exposed parts, should be pleasing to the eye even though, from a strictly engineering standpoint, appearance may seem to be of minor significance. From a sales standpoint, appearance is often a highly important, if not a controlling factor, especially in stampings exposed to view in the finished product. There is, of course, no logic in making a product that will not sell, particularly where competition is keen, hence the designer should strive to make the stamped product appeal to the eye and to the aesthetic taste of the customer.

In general, a stamping with eye appeal costs no more than an ugly one, which may serve its purpose well enough as to strength and stiffness but which is not conducive to ready sale. Utmost simplicity usually enhances rather than detracts from appearances and often promotes low cost. Straight lines are pleasing when proportions are correct and, in general, make for low costs, but sharp square corners at bends should be avoided for reasons already explained.

So-called "streamlined" designs, that is, those which involve smooth exteriors, free from projections and unnecessary irregularities, are likely to be favorable from both an appearance and a cost angle, but, if curves in two or more planes are introduced, forming dies are required and are likely to cost much more than if straight lines or curves in one plane only are maintained.

Stampings are often used to hide unsightly interior parts and then should be made, of course, so as to harmonize with or blend with mating parts and to enhance rather than detract from appearances. Very often flanges that would be unsightly if exposed can be used to promote stiffness and/or contribute other benefits and still remain hidden in the assembly.

When the designing engineer lacks a good sense of proportion or of other factors that affect general appearance, he will do well to employ an artist or industrial designer at least to establish external lines and contours. The resulting design need not and certainly should not be permitted to sacrifice any engineering advantage of significance and should, of course, be checked as to soundness from an engineering standpoint. When this is done, the artist and the engineer supplement each other's efforts and the result is a credit to both. Far from detracting from the work of either, the proper design gains the objective of good appearance and sound engineering—both consistent with moderate cost—and yields a product that should appeal to the ultimate consumer.

Rule 36. Quality: Wherever quality is important, the specific factors required should be plainly noted. If the designer asks himself what he would need to know if he were to produce the stamping and gives the vendor or the production department this information, there should be no trouble in securing what is needed.

Specifications.—A stamping that may be considered satisfactory by the manufacturer may not be so regarded by the purchaser. The price set up by the estimator may be either greater or less than is necessary to produce a satisfactory stamping for the particular use involved, all because of lack of information furnished and consequent misinterpretation of drawings presented for quotation. This results in misunderstandings between the purchaser and manufacturer. Figures 81 and 82 are examples of drawings that contain proper specifications.

On the purchaser's side, there is the engineer who provides the necessary drawings and information, the purchasing agent who does the buying, and the inspection department that passes or rejects the stampings purchased. The manufacturer has engineers who control methods and quotations, the salesman who contacts the purchaser, and the production department that must manufacture the finished product to the satisfaction of the purchaser's inspection department. For the satisfaction of all concerned, both purchaser and manufacturer should get together with definite information furnished by their respective engineering departments, if a fair price and a satisfactory product are to be assured. The designer should supply reasonably complete information as to just what is required. He should furnish

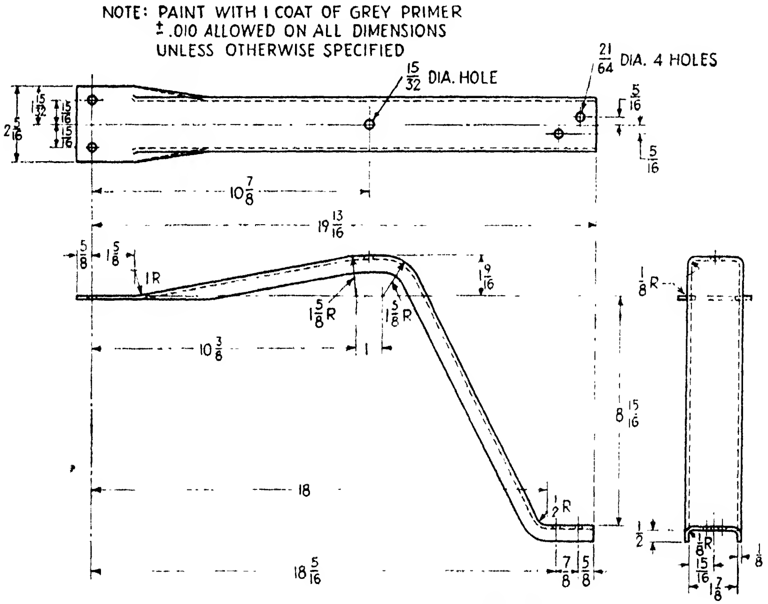

FIG. 81.—Drawing of stamped cross brace, showing proper dimensions and specifications.

reasonable specifications on or with the part drawing, in such form that they can be easily interpreted by others. Often the

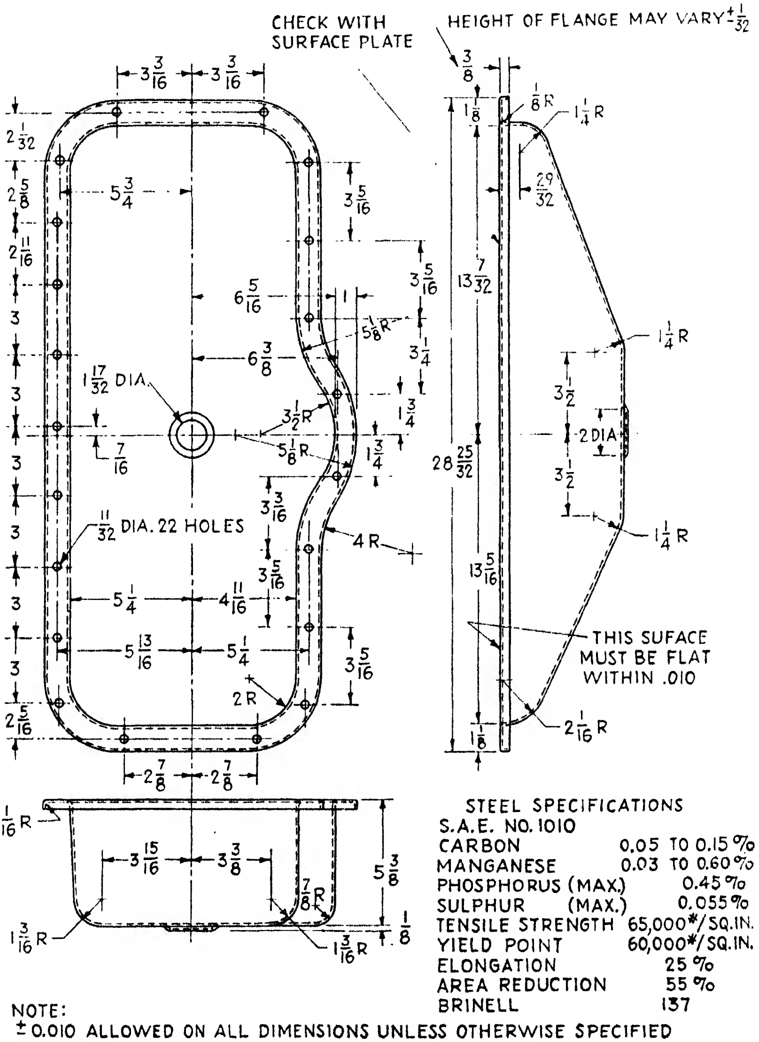

STEEL SPECIFICATIONS

S.A.E. NO. 1010	
CARBON	0.05 TO 0.15 %
MANGANESE	0.03 TO 0.60 %
PHOSPHORUS (MAX.)	0.45 %
SULPHUR (MAX.)	0.055 %
TENSILE STRENGTH	65,000#/SQ.IN.
YIELD POINT	60,000#/SQ.IN.
ELONGATION	25 %
AREA REDUCTION	55 %
BRINELL	137

NOTE:
± 0.010 ALLOWED ON ALL DIMENSIONS UNLESS OTHERWISE SPECIFIED
MATERIAL NOT PAINTED, BUT OILED BEFORE SHIPPING

FIG. 82.—Drawing of oil pan properly dimensioned and including proper specifications.

designer does not know the method of manufacture to be followed in making the particular part he is designing, but, since he can design much more intelligently if he understands production methods, he can profit greatly by discussing the design with the engineers of the stamping manufacturer and thus adapt the design to economical production. The designer may not know, for example, whether the stock will be blanked or sheared to size, but this makes a difference in the product, as more variations occur in shearing than blanking and when the stamping is formed the height or width of flanges may vary if sheared. If a channel-shaped part is involved, the web width may vary because of the method used in forming. It may be formed in a standard V die in two hits of the machine, which would give variations in width because of variations in gaging; or it may be formed in a die built especially for the job, in which case the width may be held reasonably close because both flanges are formed at one time. All metal has some springback. This may cause some dimensional variations, such as the slight opening of the flanges of a channel, but it may or may not be necessary to hold these flanges to an exact 90-deg. angle to the web. As mentioned elsewhere, there are several ways in which holes are made in stampings and the operations used in such perforating affect the chances of dimensional variations, which the designer may not foresee.

As to general appearances, there are exposed and unexposed surfaces, and the marks on wrinkles that may occur and may or may not have to be eliminated may influence greatly the tooling costs involved. Exposed surfaces, in most cases, should be free from marks and wrinkles, but on unexposed surfaces they may not matter, yet the estimator may have to guess at requirements, if there is no suitable notation on the drawing, and perhaps raise the price needlessly so as to play safe. Flatness and straightness are sometimes essential but, if not plainly specified, may be overlooked or result in misunderstandings or rejections that could be avoided by a precise specification. Assembly requirements also affect such items as lengths, clearance, notches, fits, and the like. These are only a few of the factors that the designer does well to cover in specifications intended to ensure satisfactory stampings. It is evident, however, that proper specifications and close cooperation with the stamping manufacturer is a logical way of getting results and effecting economies that may not be realized otherwise. If, before designs are finally approved and specifications are finally drawn, they are checked against the rules here given, many oversights that have a bearing on cost may be avoided. It is well to remember that stampings are not machined parts and limits cannot be held so close as machining methods permit. The more flexible the specifications are, the less costly the stamping will be.

APPENDIX

Methods of Calculating Blank Sizes.—Blanks for cups or cylinders can be calculated by areas, considering the depth and the radius on bottom (and also the radius on top, if the part has a return flange). The formula for use with Fig. 83 is given below,

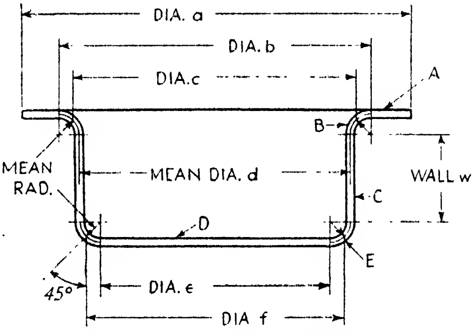

Fig. 83.—Sketch and formula for calculating blank size for a drawn part.

but sometimes it is necessary to deduct approximately 5 per cent for stretch in metal.

$$\text{Total area of elements } A, B, C, D, \text{ and } E = T = \text{area } a - \text{area } b + \left(\text{circumference } c \times \frac{\text{mean radius}}{4}\right) + \text{circumference } d \times W + \text{area } e + \left(\text{circumference } f \times \frac{\text{mean radius}}{4}\right)$$

Then $1.128\sqrt{T}$ = diameter of the blank.

For curved shapes cut from strips, the edge of the curved piece should be laid out to scale, as in Fig. 84. The line at mean thickness can be stepped off in small increments with dividers to determine the approximate total length.

Angle or channel blank width is figured by adding flanges or body widths together and deducting from the total ($1\frac{1}{2} \times$ stock thickness $+ R/4$) for each bend (see Fig. 85).

If trimming is required after forming, approximately stock thickness is added on a side, but not less than ⅛ in. The above are only approximate, as they vary with the grades and kinds of material but are generally accepted for calculating and design purposes.

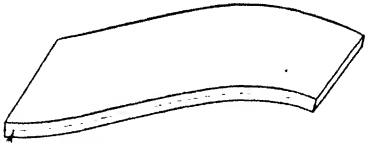

STEP OFF THIS LINE WITH DIVIDERS SET AT INCREMENTS CHECK DIVIDERS FIRST BY DIVIDING A ONE INCH LINE UNTIL A PERFECT SETTING IS ESTABLISHED

FIG. 84.—The length of curved sheets can be determined approximately by drawing a line at mean thickness and stepping off this line in small increments with dividers set at a definite small dimension.

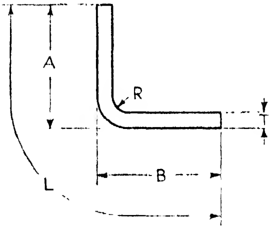

FIG. 85.—Sketch and formula showing how to determine the width of blank to be formed with a given radius at the bend.

CHAPTER V

DESIGN OF DIE-FORGED PARTS FOR QUANTITY PRODUCTION

By Charles L. Tutt, Jr.

The engineer today finds himself confronted with many problems in selecting the method to be used in fabricating parts for quantity production and in designing the part to adapt itself to production by this method. This choice may sometimes be very simple, since such considerations as cost, load conditions, factors of safety, and adaptability of the designed part may very quickly eliminate all but one of the fabricating processes. In most cases, however, the selection of the method of fabrication is not so simple and the designer has to make his choice as among several feasible fabricating processes. Once this selection has been made, the engineer should design the part with due regard to the special considerations that fit it for the specific fabricating processes chosen.

Definition.—Die forging, which is the specific fabricating process considered in this chapter, is the process by which hot metal is pressed, hammered, or upset to the desired shape between dies that contain a cavity having the form of the part to be fabricated. A die forging is thus differentiated from hammer forging, in which hot metal is hammered to the desired form without using a die.

Reasons for Selecting a Die Forging.—Designers commonly select die forging in preference to the other fabricating processes to gain one or more of the following advantages:

1. High strength.
2. Minimum weight.
3. Ability to withstand unpredictable loads.
4. Minimum metal removal in machining.
5. Saving in material.
6. Relatively smooth surface on the forging.

7. Adaptability to coining.
8. Freedom from internal defects.
9. Rapid duplication.
10. Reduced time and cost for machining.

High Strength.—A die-forged part having the same sectional area as that of a casting of the same general type of metal is usually 50 to 100 per cent stronger.[1] Because of this fact, the forging can be designed with considerably smaller section areas than castings, saving in the amount of raw material required and frequently reducing the cost of the part.

Minimum Weight.—Because of the great strength that can be obtained in die forgings, as compared with most other types of high-production products, all designed for the same working load, the die forging usually has the smallest sections and is lightest.

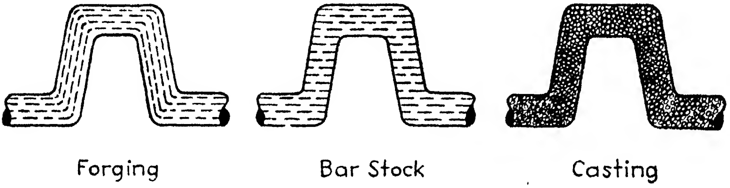

FIG. 1.—Comparison of grain in pieces which are, respectively, forged, cut from bar stock, and cast. The casting has a granular structure, being without grain.

Therefore, when a designer requires a part of great strength and light weight and its shape adapts it to die forging, the die forging deserves consideration and is commonly selected.

Ability to Withstand Unpredictable Loads.—In die forging, the metal is worked or is caused to flow. This results in what is known as "grain flow" within the metal itself. Therefore, the grain slip planes are usually so arranged that they can withstand instantaneous stress greater than the designed stresses and be able to recover without causing any permanent distortion in the part. Grain structure, or flow, is illustrated in Fig. 1.

Minimum Metal Removal in Machining.—When comparing die forgings with castings it is found that dimensional tolerances can be held, as a rule, within much closer limits than in a sand casting of corresponding size, and that, in general, much less

---

[1] This is true in comparison with most sand castings, but there are exceptions, especially for certain castings produced in metal molds.—EDITOR.

metal need be removed to bring the part to the finished size. This applies especially to external dimensions. If the part required must be hollow and it is not feasible to produce it hollow as forged, whereas the casting can be cored, the casting is likely to require that much less metal be removed in machining. Usually twice as much material must be removed from the exterior of a sand casting as from a die forging of the same finished size. Permanent mold castings, however, can be held to as close dimensional limits as die forgings and die castings usually require little or no machine finish.

Saving in Material.—Because so little material need be removed from a forging, as compared with a part cut from bar stock or cast in sand, relatively little waste in material machined results, unless a hollow part not forged in that form is involved. Moreover, there is considerable waste in fabricating castings because of the gates and risers, or sprues, whereas there is very little waste in the usual die-forging flash.

Relatively Smooth Surface of Forgings.—Die forging is among the few fabricating processes capable of producing surfaces such that they can be used for finished faces, thus eliminating machining operations of these surfaces. This applies especially to surfaces that are coined, blasted, or pickled, as most forgings have some scale and are not smooth until the scale is removed.

Adaptability to Coining.—Forgings can be die forged to tolerances close enough to allow for coining that will bring the surfaces to normal machining tolerances. Limits of ±0.001 in. or even closer can be obtained by coining.

Freedom from Internal Defects.—Forgings are always solid metal, being without the blowholes and porosity found in castings, which are prone to cause failure or to result in scrap when such defects are discovered during machining.

Rapid Duplication of Parts.—Duplication of parts is rapidly obtained in die forgings and with smaller dimensional variation than in many high-production parts. Sand castings, for example, vary considerably in shape and size, as the molds are not always rammed the same and many times cores shift or break, causing variations in size.

Reduced Time and Cost for Machining.—As die forgings can be produced close to finished size, it follows that the time for machining operations is small, especially as against cutting from bar stock. In many cases, die forgings can be held to much closer tolerances than used in normal die-forging practices. Although die-forging costs are thus increased by reason of reduced die life, machining operations are reduced or even eliminated in some instances, with a resultant over-all decrease in total cost of dies plus finished parts. Moreover, because of the uniformity of die forgings as compared with sand castings, jig and fixture clamping devices can be operated more rapidly and yet afford more accurate location.

Die-forging Methods.—The methods used to manufacture die forgings are classified according to the machine upon which they are made. Table I lists the machines employed and gives details concerning typical uses.

TABLE I.—TYPES OF DIE-FORGING MACHINES

Forging machine	How dies act on metal to be forged	Type of machine	Typical use
Hammer	Impact	Steam drop	Parts requiring considerable drawing
		Board drop	Parts of small size or flat thin shapes
Press	Pressure	Hydraulic and mechanical (crank)	Parts completed in one or more operations, but no preliminary operations can be performed
Upsetter	Squeezing and gripping	Mechanical (crank)	Round or circular parts from bar stock
Swager	Rapid succession of impacts	Rotary (mechanical)	Reducing wire, tube, or bar to a smaller (generally circular) cross section
Bulldozer	Pressure	Crank and hydraulic	Bending, forging
Forging roll	Rolling, including pressure application	Semicircular roll dies	Straight and tapered forgings and preliminary operations for hammer or upset forgings

Hammer Die Forging.—Hammer die forgings may be divided into two distinct types: (1) those produced on steam drop hammers; (2) those made on board drop hammers.

In the steam drop hammer (Fig. 2), the head imparts an additional striking force to the falling ram through the steam pressure applied to the piston. Steam also raises the ram to the position it occupies at the top of its stroke. The frame, which is fastened to the anvil, acts as a guide for the ram and supports the head. Fall of the ram plus steam pressure produce the impact, or the striking blow, by the upper forging die fastened to the lower face of the ram. A sow block holds the lower forging die and is in turn fastened to the anvil or base that absorbs the blows exerted by the ram. On the anvil, or base, the frame, ram, and head are supported.

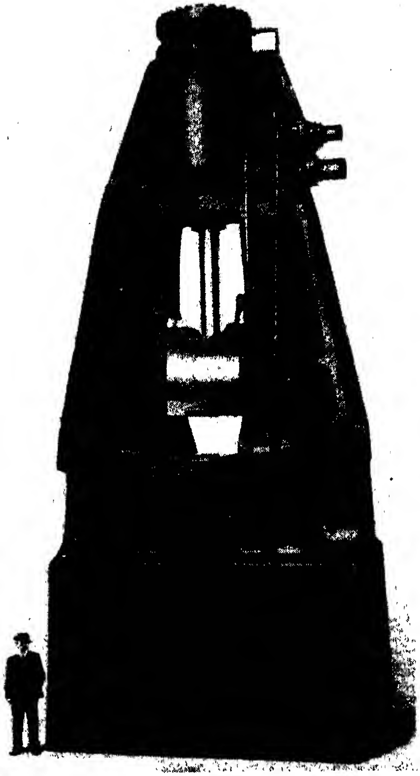

FIG. 2.—35,000-lb. Chambersburg steam drop hammer.

The board drop hammer (Fig. 3) differs from the steam drop hammer in that no force other than the impact resulting from the fall of the ram and upper die is used for striking the blow. The head merely supports the ram and the parts raising it to the position from which it falls. Raising the ram is accomplished by two oppositely rotating rolls, which are brought together against boards fastened into the top of the ram by wedges. The rolls lift the boards and ram with the upper die to the position from which it subsequently falls to strike the forging blow.

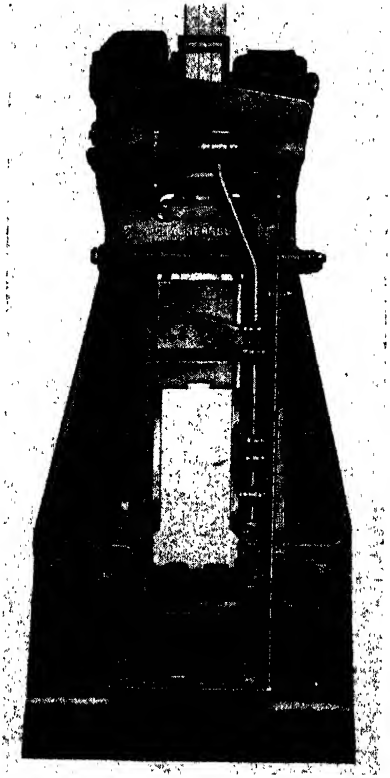

FIG. 3.—Typical board drop hammer.

Figure 4 shows a typical set of drop-hammer dies fastened to the ram and sow block. In the lower die the edger, blocker, and finishing-die impressions can be seen.

In most hammer die forging, round-cornered square stock, which is the cheapest shape produced by the rolling mills, is employed. In some cases round stock is used, but its application for hammer die forgings is not so extensive because it costs more than round-cornered square stock.

The principal advantage of hammer die forging over the other methods of die forging is that it is possible to use three different impressions in the same die block and that, with rapid blows, bar stock can be worked into a finished forging without reheating. The three types of die impressions found in hammer forging dies are the edger, blocker, and finishing impressions.

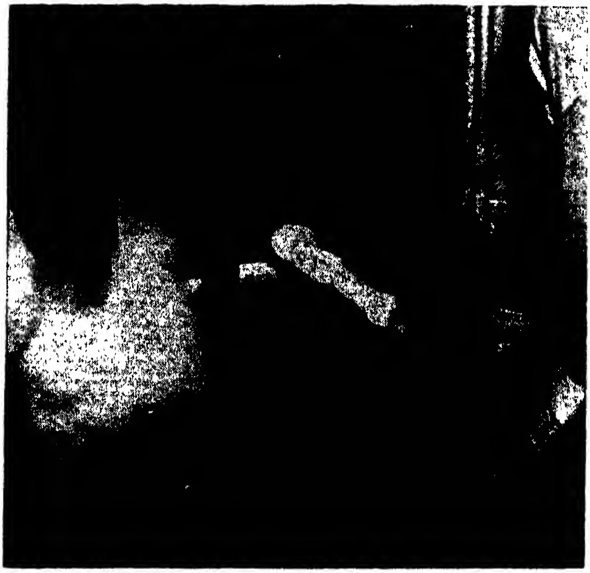

FIG. 4.—Three-impression hammer forging die.

The function of the edger impression is to give the metal such a shape that, when it is placed over the finishing die, it will completely fill the die impression and give a uniform flash. This flash is the excess material forced into the die parting around the entire forging and is later trimmed off. In many cases it may not be necessary to use an edging die when round stock is forged, but it is almost always used when round-cornered square stock is being die forged. An edger is always required when the part to be die forged has bosses or substantial variations in section shape or thickness.

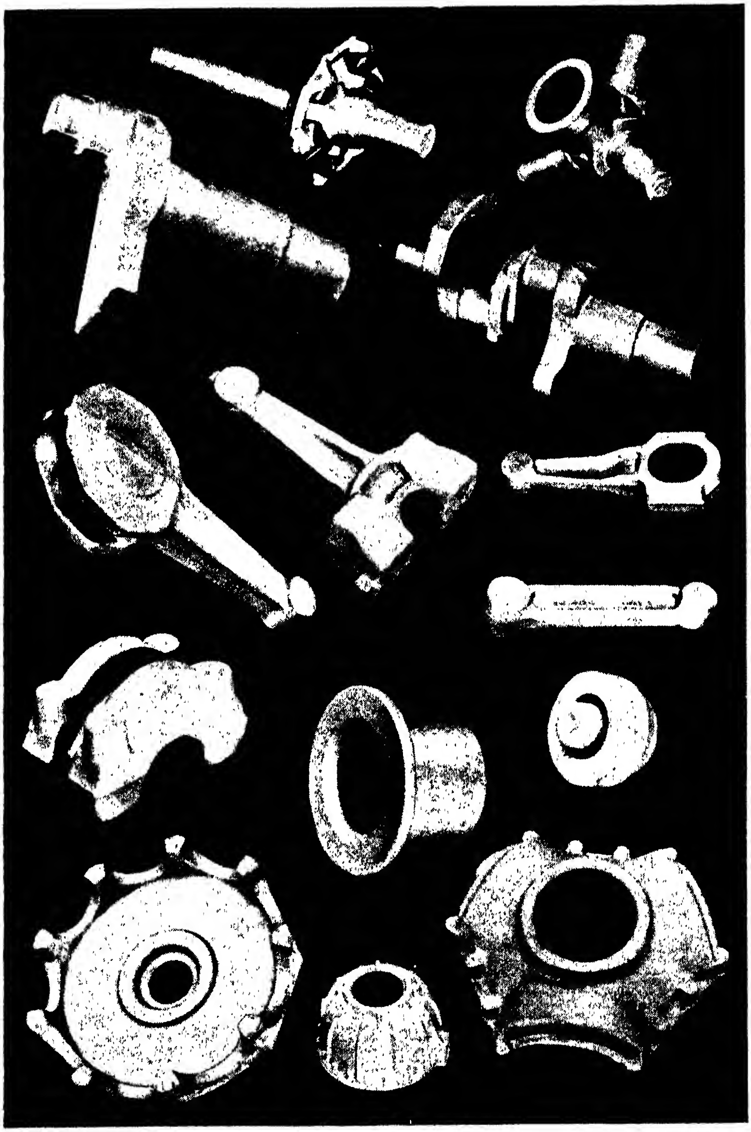

FIG. 5.—Typical drop-hammer die forgings. (*Courtesy of Wyman-Gordon Company.*)

A blocker impression is required when a part being die forged has an odd shape and the die forging must be bent to this shape so that it will roughly fit the finishing impression. A blocker is not always necessary but must be used especially when the piece to be die forged is of heavy section and of an odd shape. Otherwise, it is not generally required.

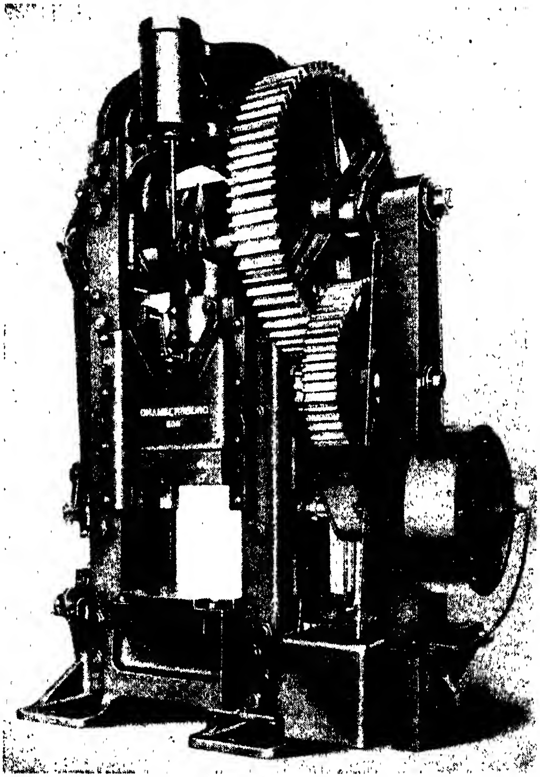

FIG. 6.—Typical trimming press.

The finishing impression, as its name implies, is an exact impression of the piece to be die forged, and it is this impression which produces the finished hammer die forging. Typical hammer die forgings are shown in Fig. 5.

Flash, which surrounds the die forging, is removed by special trimming dies in a mechanical or hydraulic press. A typical mechanical trimming press is shown in Fig. 6.

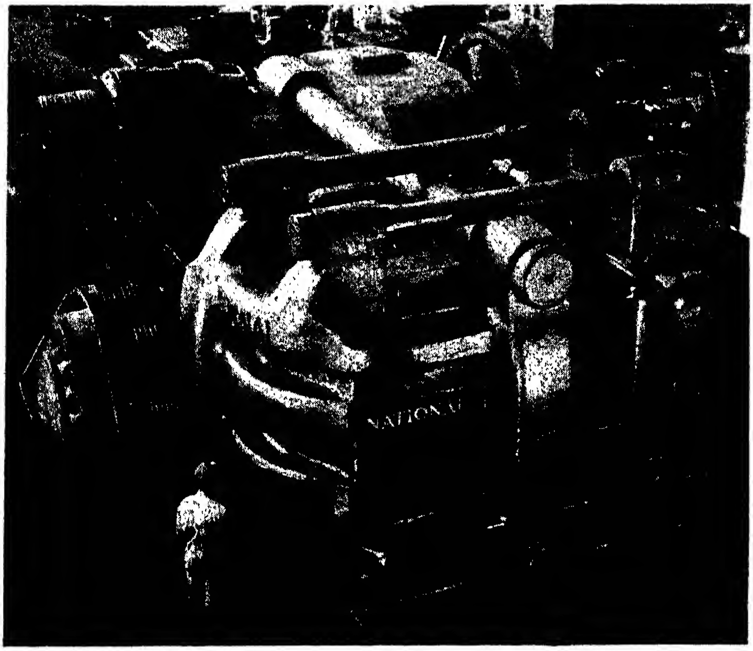

Fig. 7.—Nine-inch forging machine or upsetter.

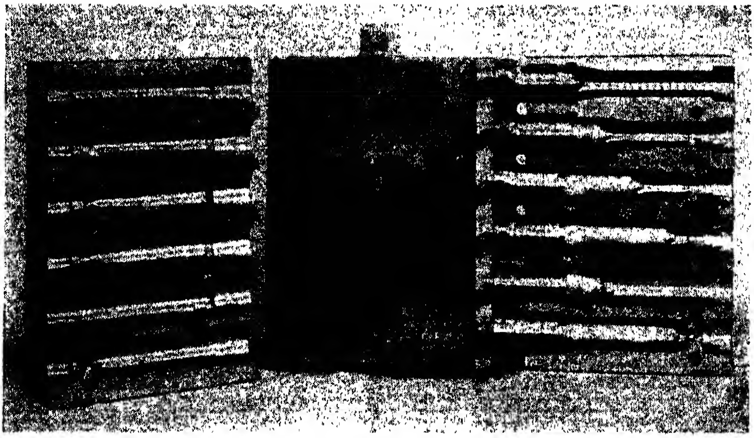

Fig. 8.—Six-step upset forging dies for a 75-mm. shell. (*Courtesy of The Ajax Machinery Co.*)

Upset Die Forging.—An upset die forging is produced when bar stock, gripped between two dies, is shortened axially when struck by a heading tool. In upsetting, the metal of the bar is flowed in the path of least resistance and the finished size of the upset portion is larger in diameter than that of the stock used.

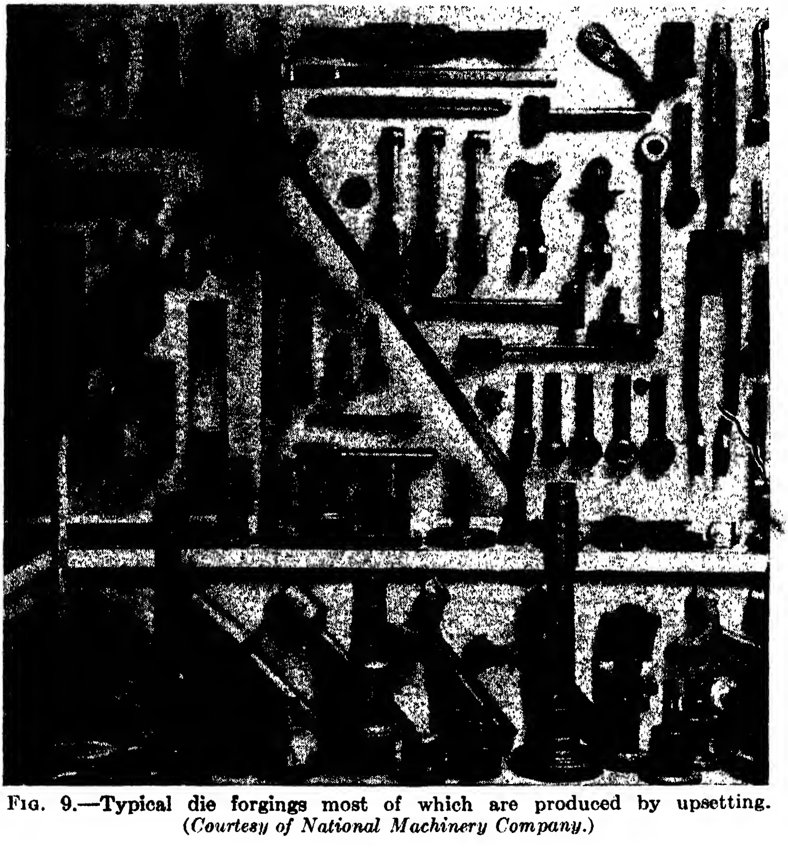

Fig. 9.—Typical die forgings most of which are produced by upsetting. (*Courtesy of National Machinery Company.*)

Die forgings of this type are made in a forging machine or upsetter, as illustrated in Fig. 7. The bed of such a forging machine is a heavy steel casting in which the stationary die, the moving die slide, and the header slide are located. In operation, the bar stock is gripped between the stationary and moving dies, and the header slide, holding the heading tool, advances and causes the bar stock to be upset. After the upset is made, the heading tool recedes and the moving die releases the bar stock so that the operator may remove the die forging from the machine.

When it is necessary to do more upsetting than can be accomplished in one blow, two or more blows are struck by successive heading tools, the forging being shifted to corresponding positions in the holding dies. Figure 8 shows a six-operation upsetter die, together with the necessary punches, which are held in the header. Punches are used in place of or in addition to heading tools when the forging is to be pierced or made hollow. In this case, the punch or punches are forced into the heated metal producing a hole or recess and, at the same time, flowing the metal around the hole outward. Typical upset die forgings are shown in Fig. 9 and typical upset and pierced die forgings in Fig. 10.

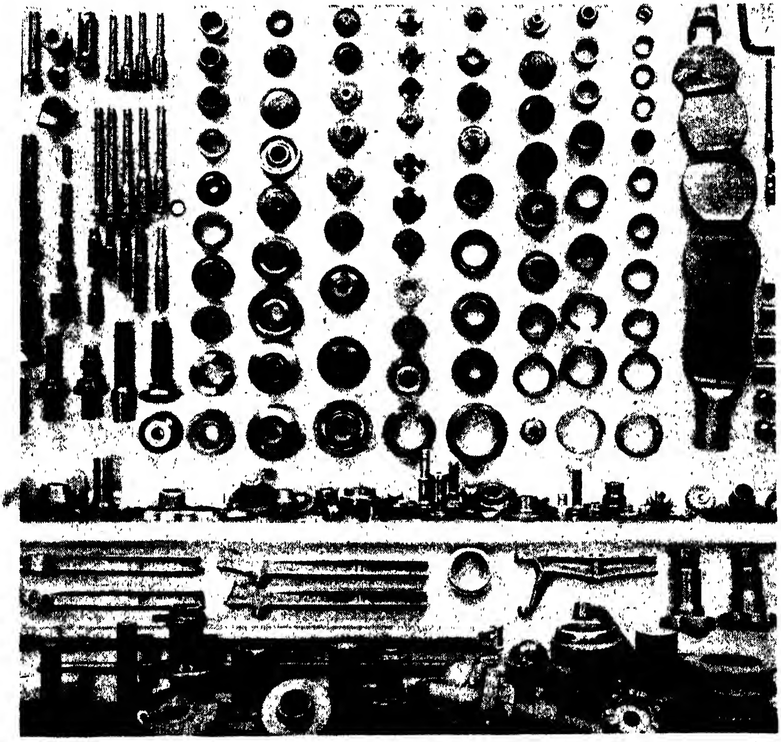

FIG. 10.—Typical upset and pierced die forgings. (*Courtesy of National Machinery Company.*)

Press Die Forging.—Hydraulic and mechanically operated presses are used to produce a great variety of die forgings. A mechanically operated press is shown in Fig. 11 and a hydraulic operated press in Fig. 12. Before die forging in a press, a slug of metal of correct diameter must be cut to the proper length, heated to the correct forging temperature, and placed in the die impression. There the pressure exerted by the press causes the metal to flow and fill the die cavity. Many die forgings are made in one operation, but dies with several impressions or separate dies each having a single impression are also used in succession, usually in the same press.

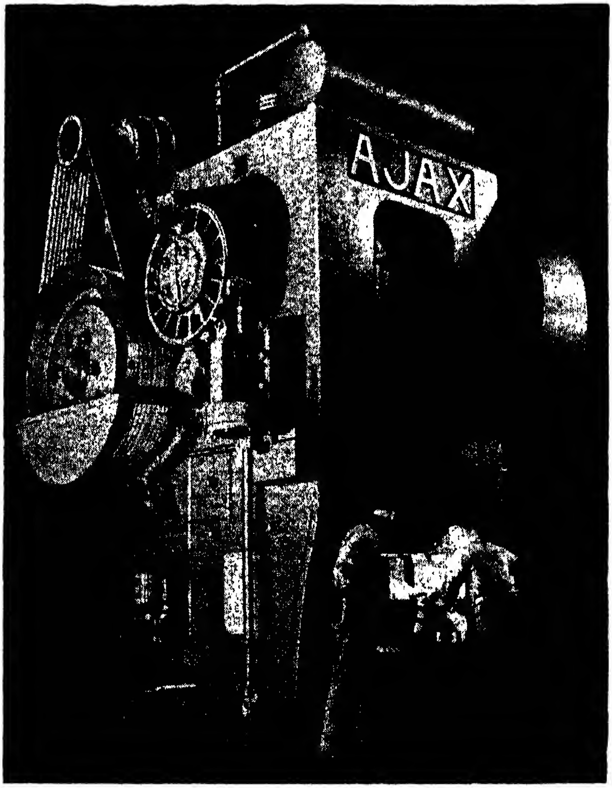

FIG. 11.—Mechanical forging press.

Forgings requiring preliminary operations (such as those performed by the edger and blocker hammer die impressions) are not adaptable to press die forging. A typical three-impression press die is shown in a press in Fig. 13. The die forgings as removed from each die impression are resting on the die block.

Swaging.—Machines used to perform swaging operations are limited to a very special class of work, namely, the process of reducing a wire, bar, or tube of any standard cross section to a cross section usually round and of smaller diameter than the stock. The work is done by dies that strike the work numerous blows at a very rapid rate. In the rotary swaging machine (Fig. 14), the dies are thrown clear of the work by centrifugal force and are caused to strike the work with opposing blows when the backers (the parts actuating the dies) pass under a pair of rolls. The backers produce impacts in rapid succession in striking the

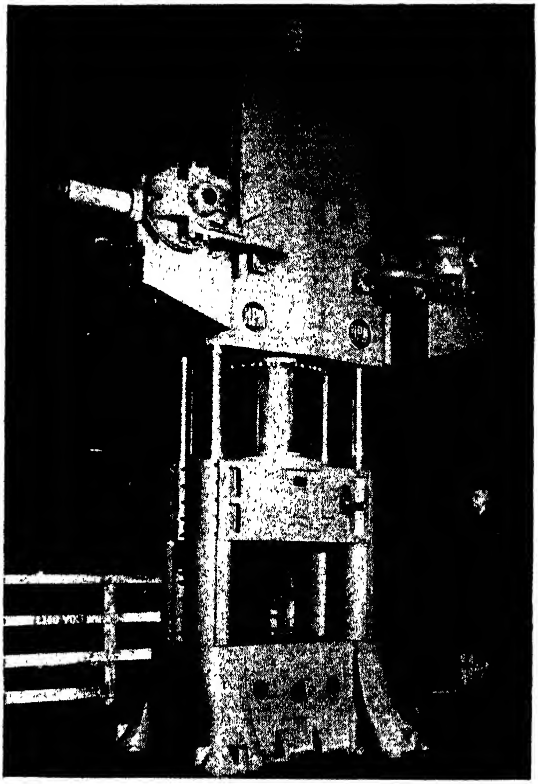

Fig. 12.—Hydraulic forging press.

dies, causing the latter to strike the work, which is elongated, of course, as its diameter is decreased.

The swaging machine is limited in its scope both in respect to size and to the type of work that it can perform. In general, the work is actually or nearly circular in section but can have either parallel or tapered sides. In its particular field, the swaging machine stands without competition, as it produces work rapidly and within close dimensions. It is adapted, however, chiefly to parts of small diameter.

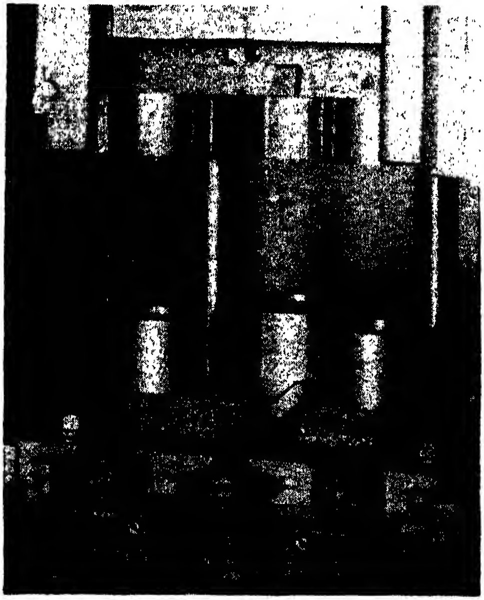

FIG. 13.—Typical press forging dies and die forgings. (*Courtesy of Ajax Manufacturing Company.*)

The Bulldozer.—The bulldozer is a horizontal machine which is used generally for bending operations and is, in reality, classified as a horizontal press. It is often confused with the upsetter or forging machine but differs from the upsetter both in construction and in function.

The bulldozer consists of a horizontal ram, which may be operated either by crank or by hydraulic means. In the hydraulic machine, the ram is guided by the ram piston, but in the crank machine the ram is guided by ways. The ram supports a moving die block. The base of the machine supports the ram on the crank-operated machine and the hydraulic cylinder on the hydraulic machine. In both machines, the fixed die block is fastened to the base. Movable dies are so shaped, of course, as to produce the bend required when they are advanced against the work held in the fixed dies.

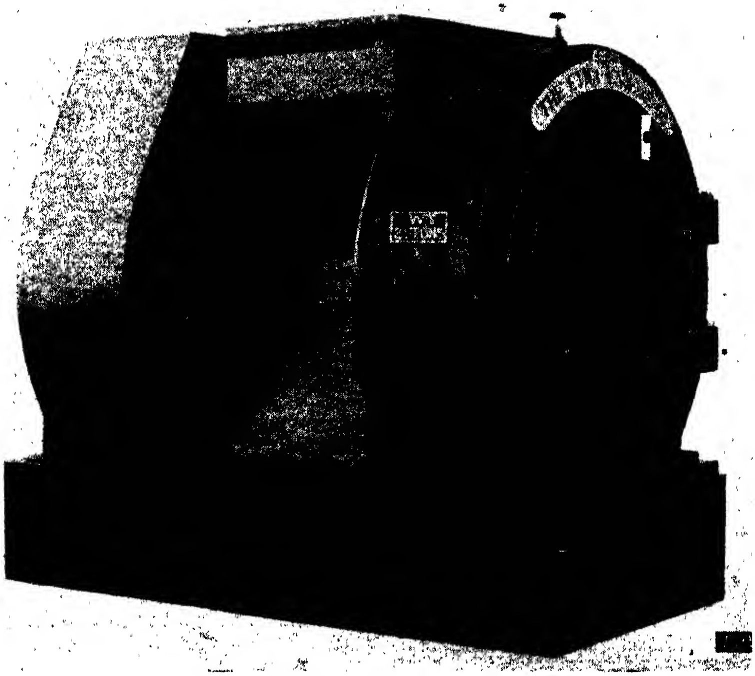

FIG. 14.—Heavy swaging machine.

A typical hydraulic bulldozer is shown in Fig. 15 and a typical crank-operated bulldozer in Fig. 16.

Forging Rolls.—Forging rolls are employed to flatten, neck, or otherwise reduce one or more dimensions of the stock under the influence of pressure exerted by rolls having polished grooves of appropriate sectional shape, the forging being elongated as it is shaped. The forging roll illustrated in Fig. 17 is used to form aluminum propeller blanks from bar stock for final hammer die forging in subsequent operations. These machines are provided with roll dies (usually semicircular), in which the stock is placed while the dies are in the open position. Revolution of the dies forms the stock as it is forced between the shaped rolls, forcing

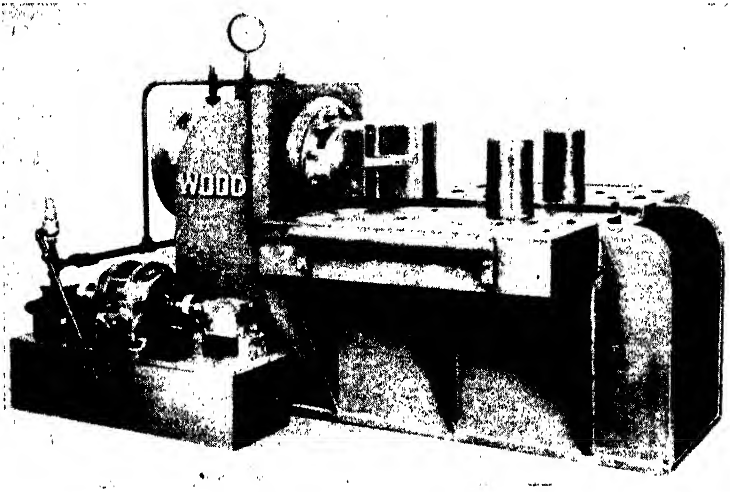

FIG. 15.—Hydraulic bulldozer.

FIG. 16.—Mechanical bulldozer.

the stock back to the operator. In this type of machine the dies usually provide for several passes, the operation being repeated in successive positions until the stock acquires the required size and shape.

Forging rolls lend themselves to a great many applications in which a reduced straight or taper section is produced and are often used to perform preliminary operations for upset and hammer die forgings.

Cold Forging.—During the past few years great strides have been made in the field of cold die-forged parts, especially in cold heading machines, which are a form of upsetting machine. Great savings have been made through the use of this process in producing headed or flanged parts similar to those made by screw machines. As cold heading is a specialized type of die forging it is treated briefly in a separate chapter of this book. Another type of cold forging, sometimes referred to as coining (but differing from the coining performed to size hot-forged parts), is a type of die forging done in some plants but is not dealt with in this chapter.[1]

FIG. 17.—Forging roll with blank and semifinished aluminum alloy propeller blade. (*Courtesy of The Ajax Manufacturing Company.*)

Factors Determining Whether or Not a Die Forging Should Be Used.—There are many factors that determine whether a part should be made by die forging. First, and above all, the die-forging process is one for mass-production work, since die

---

[1] See however, references to coined parts, in Chap. IV.—EDITOR.

cost is too high to allow it to be used for small production except for certain specialized parts, such as screws, bolts, and rivets[1] produced in standard head sizes on hot headers. These are merely specialized types of upset products and are subject to the same rules of design as other hot upset forgings but are commonly produced in standard dies unless specially shaped dies are needed. A separate chapter deals with hot-headed parts and illustrates certain forms, which need not be considered here.

Die blocks for die forging are made from nickel-chrome-molybdenum steels and are forged on all six faces in order to remove any fixed directional grain flow of the original metal. This is done because forging dies must take forces in all directions when the metal is being forced into the die impressions. Both die material and die sinking are somewhat expensive, and the expense is not justified unless it can be spread over the manufacture of a great many parts. Therefore the minimum quantity of die forgings which it is economically feasible to produce depends, as a rule, upon the original die cost.

Size of the part needed is also another factor determining the choice of the die-forging process. Very small die forgings weighing a fraction of an ounce can be made as press die forgings. Small upsetting machines and swaging machines excel for small parts. Drop hammers of small size, however, are used mostly for silverware. The maximum size of any die forging depends, of course, on the size of the die-forging machine. Presses available today can be used to make die forgings up to approximately 25 lb. Here, of course, press size, die design, and the type of material are the limiting factors in the maximum size of die forging that can be fabricated. Maximum size of drop-hammer die forgings again depends on the size of the hammer available. Board drop-hammer die forgings are limited in size by the height of fall, while steam drop-hammer die forgings are limited by the weight of the anvil. The largest steam drop hammer commercially available has a rating of 50,000 lb. and the board drop hammer a maximum rating of 5,000 lb. Such hammers are rated by the falling weight of their moving parts.

---

[1] Screws, bolts, and rivets are produced in large quantities by hot heading, especially when required in sizes not available in cold heading, but, as standard dies are on hand in many plants, these dies are often used for small lots, especially when an odd length of shank with a standard head is needed.

Upset die-forging machines are rated according to the largest stock diameter the machine can handle, and the largest is 9 in.

The character of material to be used plays a very important part in the selection of the die-forging processes. Common forging materials are steel and steel alloys with 0.1 to 0.5 per cent carbon, copper, and copper-base alloys, aluminum alloys, and magnesium alloys. Parts designed of materials other than these do not, in general, lend themselves to die forging. By far the largest part of all steel die forgings are made in drop hammers and upsetters, but most nonferrous forgings are made in presses. In many such die forgings it is possible to make use of the extrusion characteristics of the alloys. All forging materials can be die forged, however, by any or all of the die-forging machines.

Choice of Die-forging Material.—The choice of the material to be used for a die forging depends on the particular use of the part being designed. There is a wide choice of alloys that can be used in any of the materials suitable for die forging. The selection of the particular alloy depends upon one or more of the following characteristics:

1. Strength required.
2. Size of the part.
3. Toughness required.
4. Fatigue characteristics.
5. Heat and corrosion resistance.
6. Section thickness.
7. Machining properties.

Strength Required.—Strength is generally the first consideration in the choice of any die-forging material. It is important because when the designer knows the stress to be imposed upon the part he can then choose the material having the correct physical properties to meet the requirements.

Size of the Part.—The size of part is one limitation in the design since some materials are satisfactory for only small die forgings because of their limited physical properties. Other materials possess qualities that give excellent physical properties when used for large die forgings and unsatisfactory physical properties when used for small parts. This change in physical properties between large and small parts is brought about because the size of die forgings has considerable effect upon how a material reacts under heat-treatment.

Toughness Required.—Many forged parts, such as gears and axles, must be made from a material that possesses the toughness necessary for this type of service. Such materials must have the ability to be heat-treated in such a manner that they have a relatively soft core and, at the same time, a very hard outer wearing surface.

Fatigue Characteristics.—There are many die forgings that are subjected to varying and repeated stresses. The result of such a load is ultimate failure, not because the actual stress exceeds the elastic limit but because the fatigue results from the repeated stress. Some materials have endurance limits (minimum number of cycles of repeated stress before failure occurs) much higher than other materials and should be chosen for parts subject to rapidly varying stresses or stress reversals.

Heat and Corrosion Resistance.—Die forgings sometimes have to be designed for use under elevated temperatures or in atmospheres of a corrosive nature. In such cases, the only suitable materials are alloys that do not, as a rule, possess physical properties equal to those of other alloys but, because of certain special properties, are the only ones satisfactory to meet the special requirements.

Section Thickness.—Section thickness becomes an important design consideration partly because most die forgings are heat-treated in order to obtain maximum strength. Many of the materials used for die forgings cannot be heat-treated when thin sections are present, since the quenching operations cause excessive internal strains to be set up within the material itself. Thin sections tend to cause warpage of the die forging while cooling, after it has been removed from the die impression.

Machining Properties.—Certain die-forging materials have very excellent machining properties, but others have very poor machining qualities and these may result in excessive machining costs. Certain variations in some steel alloys having poor machining properties are made in the range of manganese, sulphur, and chromium. In choosing an alloy, a designer must realize that the greater the degree of hardness required in the die-forged part, the poorer the machining properties are likely to be.

Table II gives the physical properties of some of the most common Society of Automotive Engineers steels, which are used

TABLE II.—CARBON STEEL AND ALLOY-STEEL FORGING MATERIALS

Use	S.A.E. No.	National emergency substitute	Yield strength, psi	Tensile strength, psi	Reduction of area, %	Elongation in 2 in., %	Drawn temperature, °F.	Rockwell hardness	Remarks
Small forgings	1020	....	71,000 47,500*	96,500 79.500*	56.5 69	18 29	800 1200	B-92 B-82	Low physical properties; simple normalizing of forging required
Small forgings	1030	....	73,900†	87,000†	45	17.5	....	B-88	Better physical properties than 1020
Medium-sized forgings	1035	....	75.000 49.000*	106,000 85,000*	52 68	23 33	800 1300	B-64 B-88	Good machining properties. Moderate physical properties
Small and medium-sized forgings	1040	....	82.500†	97.000†	40	16	....	B-92	Fair machining properties
Large forgings	1045	....	91,000 60,000*	121,000 97.500*	46.5 56	16 28	800 1300	C-24 B-93	Avoid thin sections for heat-treatment
Corrosion- and heat-resisting forgings.	30905 30915	....	48.000	88,000	73	58.5	....	B-85	Difficult to machine and do not respond to heat-treatment
Aircraft forgings	4140	N.E. 1345 N.E. 9640 N.E. 9440	156,000‡ 86,000	180,000‡ 110,000	36 59	10 21	800 1300	C-38 C-20	Caution required in quenching thin sections
High-strength and antifatigue forgings.	6145 6150	N.E. 1350 N.E. 9645 N.E. 9445	160,000‡ 87,000	180,000‡ 108,000	42.5 62	13 20.5	800 1300	C-38 B-96	Ideal for parts subjected to severe conditions
High-strength forgings	3245 3250	N.E. 9650 N.E. 9450	200,000 98,000‡	220,000 118,000‡	39 60	12.5 21	800 1300	C-44 C-23	Most suitable for sections over 1½ in. diameter because of greater penetration effect of heat-treatment
Large high-strength forgings	3450	N.E. 8949	175.000 117,500‡	200,000 126.000‡	52 61.5	12.5 21	800 1200	C-40 C-28	High physical properties resist severe dynamic stress
Forgings requiring strength and toughness	5140	N.E. 1340 N.E. 9435 N.E. 9635	160,000 78,000‡	180,000 100.000‡	42.5 62	13 21	800 1300	C-38 B-94	Not recommended for water quenching. Used for gears and axle shafts
	2340	N.E. 1345 N.E. 9642 N.E. 9442	148.000 63,000‡	165.000 93,000‡	46.5 61	14 28	800 1300	C-35 B-90	Used for gears and axle shafts
	3140	N.E. 1345 N.E. 9642 N.E. 9442	151,000 70,000‡	175,000 102,500‡	45 65	12 20	800 1300	C-35 B-96	Used for gears and axle shafts

* Water quench.

† Cold-drawn (no heat-treatment) average properties as forged.

‡ Oil quench.

Note: Ultimate and tensile strengths vary with heat-treatment but the values given apply to steel which has been heat-treated, except †.

for die forging. During the war, shortage of alloying elements, especially, chromium, nickel, vanadium, and tungsten, occurred, hence other steels were developed to be used as substitutes. Such of these substitutes as are suited for forgings are listed along with the regular S.A.E. numbers, and the physical properties of some of these substitute (National Emergency) steels are given in Table III.

TABLE III.—PROPERTIES OF NATIONAL EMERGENCY SUBSTITUTE STEELS SUITABLE FOR FORGING*

No.	Yield strength, psi	Ultimate strength, psi	Reduction of area, %	Elongation in 2 in., %	Draw temperature °F.	Rockwell hardness
N.E. 1340	....	....	....	....	...	..
N.E. 1345	....	....	....	....	...	..
N.E. 1350	....	....	....	....	...	..
N.E. 8949	180,000	200,000	42	10	900	
N.E. 9435	....	....	....	....	...	..
N.E. 9440	166,000	176,000	51.9	15	950	39
N.E. 9442	193,000	200,000	53.3	14	800	41
N.E. 9445	....	....	....	....	...	..
N.E. 9450	....	....	....	....	...	..
N.E. 9640	139,000	174,200	43.0	13	750	39
N.E. 9642	194,000	206,000	38.8	11.5	800	45
N.E. 9645	....	....	....	....	...	..
N.E. 9650	182,000	194,500	34.7	12	900	32

* Courtesy of American Iron and Steel Institute.

Note: Figures apply to steel which has been heat-treated.

Table IV gives the physical properties of the copper-base die-forging materials. Most of these materials are generally press forged, but some can be hammer forged.

Table V gives the physical properties of the aluminum die-forging alloys. Aluminum alloys are generally hammer forged but can be upset or press die forged.

Table VI gives the physical properties of the magnesium die-forging alloys. Magnesium alloys are press die forged with the exception of alloy *L*, which is hammer die forged.

In general, carbon steels are lowest in cost and are the easiest ferrous materials to forge. Low-alloy steels rank next in cost and ease of forging, and the higher alloy steels are highest in cost and, as a rule, are hardest to forge. These factors, as well as others affecting choice (some of which are listed in Table II) deserve consideration by the designer. Other tables contain certain notes bearing upon the selection of nonferrous alloys for

TABLE IV.—COPPER-BASE-ALLOY FORGING MATERIALS
(As-forged conditions)

Name	*Tensile strength, psi	*Elongation in 2 in., %	*Rockwell B hardness	Remarks
Electrolytic copper	23,000–36,000	40–50	26–65F	Poor machinability
Telurium copper	33,000–36,000	30–40	30–45F	Good machinability
Red brass (85% Cu)	37,000–42,000	12–15	48–68F	Hot working of this alloy is extremely critical
Red brass (55% Cu, 1.5% Pb balance Zn)	70,000–80,000	15–30	55–65F	
Naval brass	55,000–62,000	40–50	50–55F	Excellent hot working alloy. Poor machinability
Arsenical brass	65,000–70,000	25–40	55–65F	
Standard forging rod	50,000–53,000	40–50	30–45F	Good machinability
Forging rod	55,000–60,000	35–45	35–50F	Good machinability
Architectural bronze	65,000–75,000	20–35	50–65F	Excellent machinability. Excellent hot-working alloy
5% aluminum bronze	55,000–65,000	50–65	30–55F	Highly resistant to acid and hydrogen sulphide
8% aluminum bronze	60,000–70,000	55–70	30–50F	Highly resistant to acid and hydrogen sulphide
10% aluminum bronze	85,000–90,000	10–20	80–90F	Highly resistant to acid and hydrogen sulphide
Aluminum silicon bronze	80,000–90,000	25–30	75–85F	
Silicon bronze, type *A*	55,000–70,000	45–70	35–60F	Toughness and can be heat-treated without a loss of strength or hardness
Silicon bronze, type *B*	40,000–50,000	50–70	50–80F	
Manganese bronze	64,000–67,000	25–40	55–65F	Fair machinability. Excellent hot-working alloy
Muntz metal	55,000–60,000	40–50	30–45F	Excellent hot-working alloy. Fair machinability
Nickel silver	85,000–95,000	10–30	.....	Corrosion and tarnish resistant. When a free cutting metal is required lead must be added

* From WILKINS, R. A., and E. S. BUNN, "Copper and Copper-base Alloys," McGraw-Hill Book Company, Inc., New York, 1943.

forging. Nonferrous alloys commonly cost more per pound than steels and are chosen only when factors other than cost are controlling.

TABLE V.—ALUMINUM FORGING ALLOYS*

Aluminum Company Specification No.	Yield strength, psi min.	Tensile strength, psi, min.	Elongation in 2 in., %	Rockwell B hardness	Remarks
11 S-T	34,000	55,000	12	52	Used for forgings requiring excellent machinability
14 S-T	50,000	65,000	10	72	Produces forgings of highest physical properties. Has good corrosion resistance
17 S-T	30,000	55,000	16	59	Has great resistance to severely corrosive conditions
18 S-T	40,000	55,000	10	59	Piston alloy has good physical properties at high temperature
25 S-T	30,000	55,000	16	59	Excellent forging characteristics and good physical properties
32 S-T	40,000	52,000	5	67	Piston alloy has good physical properties at high temperatures and lowest coefficient of expansion of any aluminum alloy
A-51 S-T	34,000	44,000	12	52	Easily forged and is therefore excellent for use on designs of intricate shapes
53 S-T	30,000	36,000	14	. .	Will withstand unusually severe corrosive conditions
70 S-T	40,000	50,000	16	. .	Has properties between alloys A-51 S-T and 14 S-T

* Courtesy of Aluminum Company of America.

Importance of a Designer's Consulting with Forging Producers.—Before completing the design of any part to be die forged, designers should consult a manufacturer of die forgings, as this is likely to be of great assistance:

1. In determining the best die-forging method.
2. In improving die design and perhaps lowering die cost.
3. In improving the design of the forging and perhaps lowering its cost.
4. In reducing the amount of machining.

Such improvements, although they may benefit the forging manufacturer, are even more likely to help the purchaser by adapting the forging to production at minimum cost without any considerable offsetting disadvantage.

Table VI.—Magnesium Forging Alloys*

Dow metal alloy	Yield strength, psi		Tensile strength, psi		Elongation in 2 in., %		Rockwell E hardness	Remarks
	Typical	Specified min.	Typical	Specified min.	Typical	Specified min.		
J	24,000	22,000	40,000	38,000	10	6.0	68	Press forged, moderately stressed parts
L	26,000	19,000	37,000	34,000	11	6.0	61	Hammer forged
O	30,000	24,000	45,000	42,000	8	5.0	86	Press forged, high stressed parts of simple design
X	24,000	20,000	41,000	38,000	16	9.0	71	Press forged, moderately stressed parts, improved corrosion resistance

* Courtesy of Dow Chemical Company.

Determining the Best Die-forging Method.—Although, in most cases, the designer is not very much concerned with the die-forging method, he may find, unless he consults a forging manufacturer, that the forging is far from satisfactory from a production standpoint. The result of such lack of cooperation commonly results not only in needlessly expensive forgings but also in products that do not give the results that could be realized were the design well adapted to modern die-forging practices.

The size and material of a die forging have a decided effect upon the size and type of die-forging machine to be used. It is uneconomical to use a very large die-forging machine for a small die forging and impossible to use a small machine to form a very large die forging. By consulting the forging manufacturer, the designer can make sure that equipment is available for the particular forging to be produced. Such consultations usually prevent a great deal of additional work for both designer and manufacturer.

The material chosen by the designer often determines the type of forging machine to be used and may also fix the output of the machine as well as be a controlling factor in the cost of the die forging. Aluminum, for example, cannot be hammer forged so rapidly as steel and, for the same size of forging, aluminum requires a much larger hammer than steel.

Improving Die Design.—By cooperation between the designer and the die-forging manufacturer, a great deal can be done to improve the die design. There are many slight changes in design that the die-forging manufacturer can suggest with benefit to the designer. Such changes do not ordinarily have much effect on the designed part but frequently simplify the die construction, reduce die wear, and thus greatly reduce die cost.

Improving the Design of the Forging.—The die-forging manufacturer is commonly of great assistance to the designer through the suggestions he gives. Most designers do not have very much knowledge of how correct grain flow can be obtained in die forgings. Such information can be obtained by cooperation between the designer and die-forging manufacturer, and the manufacturer often suggests how forgings can be bettered in other respects, such as decreasing the tendency to warp in heat-treatment and minimizing the amount of straightening before machining.

Reduction in Machining.—Many parts designed for die forgings require considerably more machining than is necessary, and the die-forging manufacturer can, in general, suggest ways for reducing the amount of machining needed. There are certain general rules as to the amount of machine finish necessary on die forgings. But die forgings vary a great deal in shape and design, and therefore the advice of the die-forging manufacturer can be of great assistance to the designer in determining the minimum machine finish to specify. Such consultations often result in saving much unnecessary machining, reducing waste, and correspondingly decreasing the final cost of the part.

Upset die forgings with pierced holes frequently effect marked savings in drilling operations beside saving considerable material. Parts designed for upsetting and piercing, however, necessitate consultation between the designer and die-forging manufacturer, and, in addition to accomplishing the savings just named, the consultation frequently results in improving the forging because of better grain flow.

Rules for Die-forging Design.—Many designed parts cannot be die forged because the designer has not taken into consideration certain rules that either must be followed or are necessary for maximum economy. There are also certain limitations to the various die-forging processes, and these are covered and explained under rules grouped as follows:

1. General die-forging rules.
2. Drop-hammer die-forging rules.
3. Upset die-forging rules.
4. Press die-forging rules.

General Rules.—General die-forging rules are those which must be considered by the designer regardless of the particular type of machine upon which the die forging is to be fabricated. In other words, these rules apply to the design of any and all types of die forging. Special rules applying only to specific types of forgings are given under subsequent headings.

Rule 1. Draft: Allow sufficient draft to facilitate removal of the die forging from the die but not so great an angle as to increase machining costs unduly. Draft is the angle or taper that must be provided on the side walls, both outside and inside, of any die forging to facilitate its removal from the die impression and to allow withdrawal of the punch from a hole formed in the forging. The designer should indicate draft clearly on all drawings of parts designed for die forging. Draft is illustrated as angle *d* in Fig. 18. The draft angle is the angle that the wall makes with a line parallel to the direction of die motion.

Certain standard, or normal, draft angles have been set up for die forgings made in various die-forging machines and are given in Table VII.

TABLE VII.—DRAFT ANGLES

Machine	Normal draft angle, deg. external surfaces	Normal draft angle, deg. internal surfaces	Remarks
Board drop hammer. .	7	10	Modern machines can go as low as 5 deg.
Steam drop hammer. .	$5\frac{1}{2}$	7	Modern machines can go as low as $1\frac{1}{2}$ deg. Older machines require more draft
Upsetter.	3	5	Draft required only on deep dies with narrow pockets
Press.	0–3	0–3	May be designed without draft as parts are ejected, when dies open, by knockout pins

In many instances a draft angle that is less than the normal angle given in Table VII may be used. In such cases, however, the draft angle requires more care of the dies and die life is reduced because of greater die wear. Many of the hammer die-forging machines in use today are as much as twenty years old, and with these machines it is not feasible to use less than a 10-deg. draft angle if satisfactory die forgings are to be secured. At the other extreme is the modern hammer forging machine, which can use draft angles as small as 1½ deg. with great success. Selection of the optimum draft angle consequently necessitates

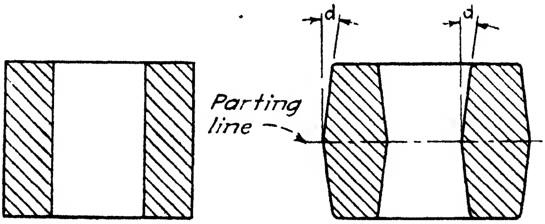

Incorrect (no draft) Correct (with draft)

FIG. 18.—Sections of forgings as designed with draft (right) and without draft (left).

a knowledge of the equipment to be used and requires cooperation between die-forging designer and manufacturer if the most satisfactory design from a production standpoint is to be secured. There are cases, however, when a small draft angle may materially reduce machining costs and more than offset such extra die costs as may be entailed, but angles less than normal should not be specified without first making sure that it is feasible to hold them with equipment available.

Rule 2. Parting Line: Design the forging, if possible, so that approximately equal volumes of metal are at each side of the parting and so that the die can be parted in one plane; but, where a one-plane parting is not feasible, design for the simplest irregular parting that will yield required results. The parting of a die forging is the line or plane of separation between the two portions of the forging dies. Draft in the case of all die forgings begins at the parting line. The choice of the location of the parting line is among the most important considerations in designing any part to be die forged. It is of extreme importance that the parting line be so located, if possible, that there is an equal or nearly equal volume of metal on each side of the parting line when the forging is completed. Figure 19 illustrates the difference between good and poor design in this respect.

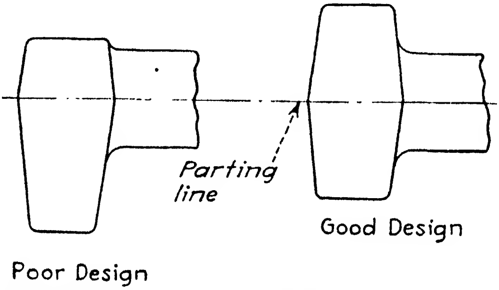

FIG. 19.—Forgings that have unequal and equal volumes of metal each side of the parting.

It is most desirable to arrange the parting so that it falls in one plane (usually referred to as a straight line), where this is possible, as such a design greatly simplifies die construction and helps to minimize die cost. In many cases, however, it is impossible to make such a straight parting line because of the shape of the part. When the parting line requires one change of plane, the dies used are called "locked dies." If a locked die has more than one change of plane it is called a "compound locked die." These three types of dies are illustrated in Fig. 20.

Where locked dies are used, it is necessary to design the parting so as to remove any side thrust that results when the parting is not in a plane at right angles to die motion. On difficult parts, this die side thrust is taken by the use of the so-called "counter die locks," as illustrated in Fig. 21.

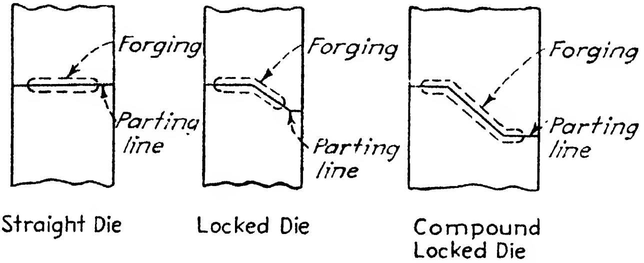

FIG. 20.—Types of forging dies: straight, locked, and compound locked.

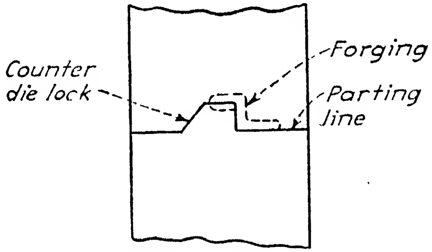

FIG. 21.—Forging die having a counter lock.

All upset forging dies are straight dies, as are most press forging dies. Hammer forging dies quite often have to be of the locked type, but straight die partings are preferred because they cost less and are likely to involve lower maintenance cost and fewer complications in forging.

Rule 3. Fillets: Avoid all sharp inside corners and all sharp exterior edges and corners. Because of the sluggish flow of any metal it is virtually impossible to die forge a part with a sharp corner or edge. It is, therefore, necessary, in designing die forgings, to see that there are no sharp corners or edges and that adequate radii and fillets are used. Fillets that are too small result in die cracks and reduce die life. In hammer die forgings, fillets commonly run from $\frac{3}{64}$ in. minimum for small die forgings to $\frac{1}{8}$ in. minimum for hammer die forgings of 100 lb. Upset and press die forgings require the same radii and fillets as for hammer die forgings.

When designers fail to include fillets at all intersecting inside corners and radii on outside edges and corners, the forging manufacturer commonly adds those of the minimum size necessary, usually without consulting the designer.

One important consideration in the use of fillets is the effect obtained when too large a fillet is used and must be machined away. By reference to Fig. 22 it can be seen that it is desirable to use as small a fillet as is feasible, in order to retain the most favorable grain structure. If a square or nearly square corner must be machined, fewer flow lines in the material will be cut through in machining if the fillet is small than if it is large, hence the part having the smaller fillet initially will be the stronger.

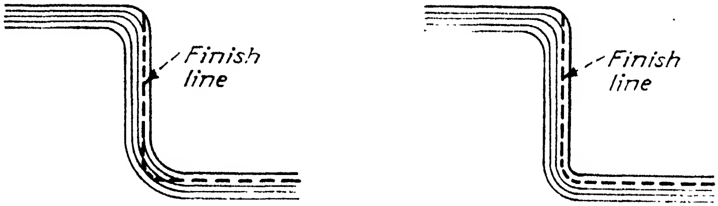

Fillet Too Large Fillet Correct

FIG. 22.—Effect of fillet size when machining is required. When fillets are small fewer flow lines are cut in machining.

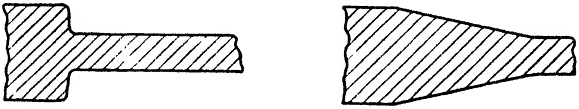

Wrong Design Correct Design

FIG. 23.—Abrupt changes in section thickness, as in design at left, should be avoided and a design similar to that at right should be used.

Rule 4. Changes in Section Thickness: Avoid all abrupt changes in section thickness. In designing any die forging all abrupt changes in section thickness should be avoided. When a change in section thickness is essential, it should be as gradual as conditions permit. Right and wrong designs are illustrated in Fig. 23.

Reasons for this rule include the fact that, as thin sections cool more rapidly than thicker ones, heavy shrinkage stresses are apt to be set up where abrupt changes in section thickness occur.

Rule 5. Thin Sections: Avoid sections that are too thin to be forged readily. Sections so thin as to involve unnecessary difficulty in forging should be avoided. Although sections can be die forged satisfactorily in hammer die forging of moderate size when thickness is $\frac{3}{32}$ in. or above, a minimum thickness of $\frac{1}{8}$ in. is preferred. When even the above minimum thicknesses are specified, however, warpage is likely to occur during the cooling that follows removal from the forging die. Consequently, straightening operations usually are needed before machining can be done. Alloy steels are very difficult to die forge when thin sections are specified.

Thin walls on die forgings have a tendency to freeze in the die. This not only results in high scrap losses but also makes the cost of the die forging increase because of the extra care required to die forge the part.

Thin sections are very likely to cause quench cracks during heat-treatment because of the internal strains that are set up as a result of the quenching operation. This is especially true of high-carbon steels and certain of the alloy steels.

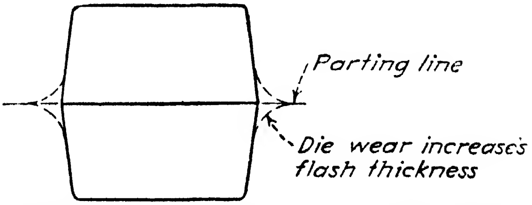

FIG. 24.—Sketch indicating effect of die in increasing thickness of flash.

Rule 6. Locating Points for Machining: See that locating points are not close to die partings. In designing any part for die forging, the designer should specify where the locating points for subsequent machining should be. Locating points should always be kept away from the parting line because otherwise die wear will result in a constantly changing position. Figure 24 indicates how die wear at the parting line occurs. The proper position for locating points can be determined by a careful consideration of the way in which the part must be held while being machined at the places where metal must be removed and of those dimensions which must be held within close limits.

Rule 7. Finish: Allow sufficient material for machining at all points where such finishing is necessary. Whenever a die forging has to be machined to bring it to its finished size a certain amount of material must be left to be removed by machining. The allowance for machine finish ranges from $\frac{1}{32}$ in. (for small hammer die forgings) to $\frac{5}{16}$ in. (for large hammer die forgings); this is not an over-all allowance but should include the amount of metal to be removed from each surface to be machined.

Upset die forgings can be held to dimensions such that an allowance of $\frac{1}{16}$ in. for finish is sufficient, as a general rule, and even less allowance is permissible when modern machines are employed. For press die forgings $\frac{1}{16}$ in. or less allowance for finish is sufficient, the amount depending upon the part to be die forged and upon the type of dies used.

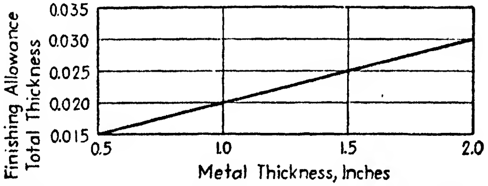

FIG. 25.—Finishing allowance for coining. (*Chevrolet "Draftsman's Handbook."*)

Many die forgings are coined cold, that is, are brought to the finish dimension by striking between a pair of dies made especially for this purpose. Coining not only approximates the finish attained by machining but over-all tolerances of less than ±0.001 can be held on bosses and other similar parts of die forgings. The amount of finish allowance recommended for coining operations in the Chevrolet "Draftsman's Handbook" is given in Fig. 25.

Rule 8. Spotting for Drilling: Where large holes are to be drilled in forgings parallel to die motion, it is usually well to specify that the holes be spotted by the forging dies. It is a common practice in die forgings, which require subsequent drilling of holes parallel to die motion, to specify that the hole be spotted by the forging die in order to aid in starting the drill at the proper point. Figure 26 shows how a simple forging is spotted for drilling a central hole. Holes smaller than $\frac{1}{2}$ in.

in diameter are not usually spotted by the die. Even though drilling is to be done from only one side of the forging, spots are placed on both sides of the piece. This is done partly to secure a more favorable grain flow and to bring the grain flow lines closer together. Where close center distances are required (on the distance between the crankpin and piston-pin holes in a connecting rod, for example) only one of the holes should be spotted *unless* the forge shop can guarantee that hole centers will come within required limits.

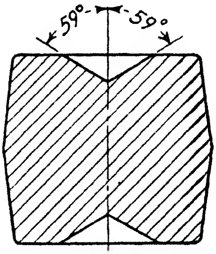

Fig. 26.—Use of spots to facilitate drilling.

Rule 9. Grain Size: Specify that the material used in the forging have a fine grain, especially when the material is steel and/or is to be subjected to heat-treatment. It is important to specify a fine grain size, especially when the material used is steel and when heat-treatment is required. Up until the past few years, designers have considered chiefly the composition of the material to be used and have failed to take note of grain size. For best die-forging and heat-treatment results, a fine-grained steel is essential, as grain size always increases with heat-treatment. Large grain size is a common cause of quench cracks, which are, in many cases, regarded as a fault of the forging process rather than as a result of using a material having too coarse a grain size.

Thin sections are very likely to cause quench cracks during heat-treatment because of the internal strains that are set up as a result of the quenching operation. This is especially true of high-carbon steels and certain of the alloy steels.

Rule 10. Cleaning: Specify that die forgings be furnished free of scale and that forgings to be subjected to fatigue-producing stresses be freed of scale by blasting rather than by pickling. Steel die forgings must always be cleaned of scale before being machined, and specifications should call for such cleaning by the forge shop. Scale is very hard and, unless removed, greatly decreases tool and cutter life. Two general methods are used for the removal of scale. The first is pickling, which consists of placing the drop forgings in a solution of hot muriatic acid (commercial hydrochloric acid) of about 50 per cent strength. Pickling successfully removes the scale but has a very bad effect upon the forgings unless it is carefully controlled. Pickling has a tendency to open up any hair cracks and these may cause fatigue failure as a result of stress concentration at the cracks.

The second cleaning process is by shot-blasting, in which the die forging is subjected to a stream of steel shot traveling at high velocity. Impact of the shot loosens the scale and gives the forging a rather bright appearance as compared with those cleaned by pickling.

Shot-blasting is more expensive than pickling and, of course, requires very special equipment. Almost all forge shops have facilities for pickling but few have shot-blasting equipment. There has been considerable discussion as to the advantages of shot-blasting and the detrimental effect of pickling upon die forging, but conclusive evidence has not been produced to show significant differences *provided* that the pickling operation is carefully controlled. Die forgings subject to fatigue conditions, however, should be cleaned by shot-blasting when possible.

All drawings of steel die forgings should carry the following, or an equivalent note: "Forging must be clean and free from scale."

Rule 11. Deep Pockets: Deep pockets should be avoided and recesses should be as simple in shape as conditions permit. The designer should always consider the problems involved in cleaning a steel die forging when the part is being designed. To this end, all deep pockets should be eliminated and the largest radii possible should be used at the bottom of all pockets and recesses unless the surfaces involved are to be machined (see Rule 3). More important still is that all pockets and recesses be as simple in shape as conditions permit. Figure 27 shows a die forging designed with no thought of cleaning and with recesses having narrow corners, which are hard to clean. Also shown is a correctly designed die forging in which recesses at each end of the web are as simple as possible. Recesses are produced, of course, by projections in the die, and the edges of each wear rapidly if made with small radii or narrow portions intended to form correspondingly sharp recesses. Recesses of simple shape are not only easier to produce but help to minimize die costs.

Rule 12. Identification: Where letters, numbers, or similar marks are required on die forgings, see that they are so designed and so located as to minimize die cost and upkeep and so as not

to be removed when the forging is machined. When it is important that die forgings be readily identified (especially when two parts are very similar) it is often required that part numbers or trade-marks appear on the forging. Because of the excessive wear on such identifications, most die-forging manufacturers prefer to place such numbers or figures on an insert in the die so that the insert can be changed readily whenever it becomes worn. Therefore, it is important that the designer

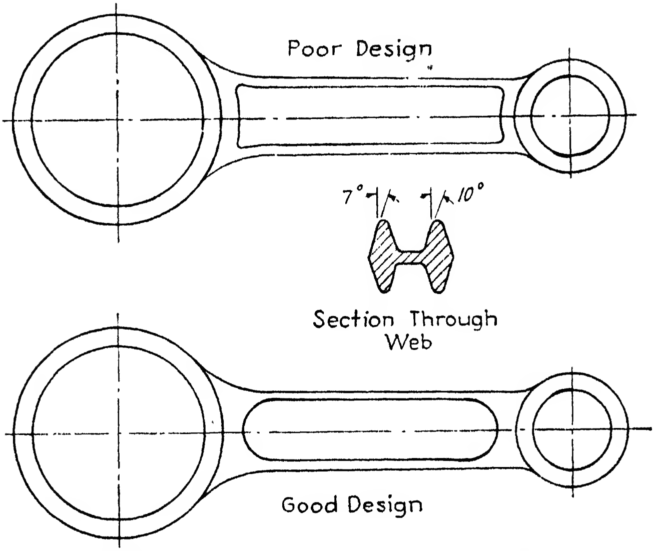

FIG. 27.—Relatively sharp corners in web recess (as in upper forging) result in rapid die wear and difficulties in scale removal. Simpler recess with well-rounded ends (as in lower view) avoids these disadvantages and helps to reduce die costs.

specify where on the die forging the identification mark shall appear. It should be so placed as to allow the use of an insert and still appear upon a surface where it will not be machined off subsequently. Identification or trade-marks can be made in the die itself, but when this is done, the dies must be sent to the die shop for repair when the markings become worn whereas a new insert can be placed in the die at any time without removing it from the forging machine. Markings of this type should always be in a plane at right angles to die motion and should not involve square or sharp edges or corners. In general a letter or number that is recessed into the die (and thus raised on the forging) is preferable to those which are raised above surrounding die surfaces.

Rules for Design of Hammer Die Forgings.—Rule 13. Tolerances: Never specify tolerances closer than are essential to accomplish a given end and never closer than the "close" figures given in accompanying tables unless the forge shop agrees and the advantage gained is offset by any increase in cost that the closer tolerances entail. The size of hammer die forgings ranges from those weighing a fraction of an ounce to those weighing 800 lb. Certain tolerances have been set up by the Drop Forging Association to govern the following:

1. Thickness.
2. Length and width, as affected by:
   - *a.* Shrinkage and die wear.
   - *b.* Mismatching.
   - *c.* Trimmed size.
3. Draft angle.
4. Quantity.
5. Fillets and corners.

Thickness tolerances should be as shown in Table VIII. Shrinkage plus die wear tolerances should be as shown in Table IX. Mismatching tolerances should be as shown in Table X. In respect to trimmed size tolerance, the Drop Forging Association rules provide that they shall not be greater or less than the limiting sizes of the parting plane interposed by the sum of the draft-angle tolerances (Table XI) and die-wear tolerances (Table IX). Table XI gives draft-angle tolerances, Table XII quantity tolerances, and Table XIII fillet tolerances.

Although the tolerances given in the tables (which apply only to hammer die forgings) are representative of commercial limits (as forged), it does not follow that closer tolerances cannot be secured when conditions warrant whatever added cost may be involved. Close tolerances are sometimes warranted by lower costs in machining, which may more than offset any added die or other costs that are entailed. Clearly, however, there is nothing gained and much may be lost in specifying tolerances closer than are needed or than can be held on mating parts.

TABLE VIII.—THICKNESS TOLERANCES (INCHES),* HAMMER FORGINGS
(As prepared by the Drop Forging Association)

Net weight, lb., up to	Commercial, in.		Close, in.	
	Minus	Plus	Minus	Plus
0.2	0.008	0.024	0.004	0.012
0.4	0.009	0.027	0.005	0.015
0.6	0.010	0.030	0.005	0.015
0.8	0.011	0.033	0.006	0.018
1	0.012	0.036	0.006	0.018
2	0.015	0.045	0.008	0.024
3	0.017	0.051	0.009	0.027
4	0.018	0.054	0.009	0.027
5	0.019	0.057	0.010	0.030
10	0.022	0.066	0.011	0.033
20	0.026	0.078	0.013	0.039
30	0.030	0.090	0.015	0.045
40	0.034	0.102	0.017	0.051
50	0.038	0.114	0.019	0.057
60	0.042	0.126	0.021	0.063
70	0.046	0 138	0.023	0.069
80	0.050	0.150	0.025	0.075
90	0.054	0.162	0.027	0.081
100	0.058	0.174	0.029	0.087

* These apply to a thickness perpendicular to the plane of the parting line of the die.

TABLE IX.—SHRINKAGE PLUS DIE WEAR (INCHES), HAMMER FORGINGS
(As prepared by the Drop Forging Association)

Lengths or widths, in., up to	Commercial, in., plus or minus	Close, in., plus or minus	Net weight, lb., up to	Commercial, in., plus or minus	Close, in., plus or minus
1	0.003	0.002	1	0.032	0.016
2	0.006	0.003	3	0.035	0.018
3	0.009	0.005	5	0.038	0.019
4	0.012	0.006	7	0.041	0.021
5	0.015	0.008	9	0.044	0 022
6	0.018	0.009	11	0.047	0.024
For each additional inch add	0.003	0.0015	For each additional 2 lb. add	0.003	0.0015

On the other hand, it is clear that commercial tolerances commonly are made wide enough to include forgings produced on well-worn equipment with which close tolerances are not likely to be secured, whereas shops having new equipment may be able to hold closer tolerances at no increased expense. If, in these circumstances, the closer tolerances prove beneficial, say in lowering machining costs, the purchaser may properly take advantage of this fact.

TABLE X.—MISMATCHING TOLERANCES,* HAMMER FORGINGS
(As prepared by the Drop Forging Association)

Net weight, lb., up to	Inches tolerance	
	Commercial	Close
1	0.015	0.010
7	0.018	0.012
13	0.021	0.014
19	0.024	0.016
For each additional 6 lb. add	0.003	0.002

* Mismatching results from the displacement of one die block in relation to the other. This tolerance is independent of, and in addition to, any other tolerances.

In general, however, the designer should not call for closer tolerances than those termed "close" in Tables VIII to XIII inclusive, unless he first consults a qualified die-forging shop or learns first whether the closer tolerances are feasible and, if so, whether any extra cost that may be involved is justified by such benefits as may be secured.

TABLE XI.—DRAFT-ANGLE TOLERANCES (DEGREES), HAMMER FORGINGS
(As prepared by the Drop Forging Association)

	Normal angle, deg.	Commercial limits, deg.	Close limits, deg.
Outside	7	0–10	0–8
Inside holes and depressions	10	0–13	
	7	....	0–8

Accompanying tables give tolerances for the part as forged and (presumably) cleaned of scale. It is possible and often necessary, of course, to secure closer tolerances by machining

TABLE XII.—QUANTITY TOLERANCES, HAMMER FORGINGS
(As prepared by the Drop Forging Association)

No. of pieces on order	Overrun pieces	Underrun pieces
1– 2	1	0
3– 5	2	1
6– 19	3	1
20– 29	4	2
30– 39	5	2
40– 49	6	3
50– 59	7	3
60– 69	8	4
70– 79	9	4
80– 99	10	5
	Per cent	Per cent
100– 199	10	5.0
200– 299	9	4.5
300– 599	8	4.0
600– 1,249	7	3.5
1,250– 2,999	6	3.0
3,000– 9,999	5	2.5
10,000– 39,999	4	2.0
40,000–299,999	3	1.5
300,000 up	2	1.0

TABLE XIII.—FILLET AND CORNER TOLERANCES, HAMMER FORGINGS
(As prepared by the Drop Forging Association)

Net weight, lb., up to	Commercial, in.	Close, in.
0.3	3/32	3/64
1	1/8	1/16
3	5/32	5/64
10	3/16	3/32
30	7/32	7/64
100	1/4	1/8

Fillet and corner tolerances apply to all meeting surfaces even though not specified on drawings.

Fillet tolerances apply to inside corners and edges in all cases in which surfaces meet at an angle less than 180 deg.

Corner tolerances apply to outside corners and edges in all cases in which the surfaces meet at an angle greater than 180 deg.

or by coining. These extra operations naturally add to over-all cost but are often necessary to meet a given set of conditions. Coining operations require one or more extra sets of dies, but, once available, these often make it possible to size several dimensions simultaneously at very low cost, thus fully justifying the cost of the extra coining dies.

Rule 14. Height of Bosses: Limit the height of bosses, the axis of which is not in the parting line, to the minimum that will meet requirements and to a maximum of two-thirds of the minimum diameter of the boss. It is important for the designer to realize that the height of boss, on any part which is to be hammer die forged, is limited because the metal does not flow readily to fill the cavity forming the boss. The boss must be no higher than two-thirds its minimum diameter and a minimum height favors ease of production. This applies, of course, to bosses the axes of which are not in the die parting. Much longer

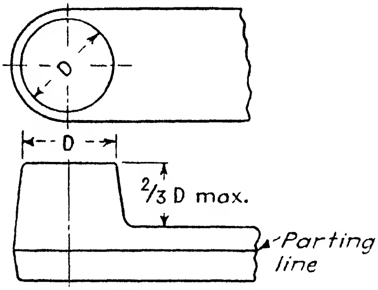

Rule for Boss Height

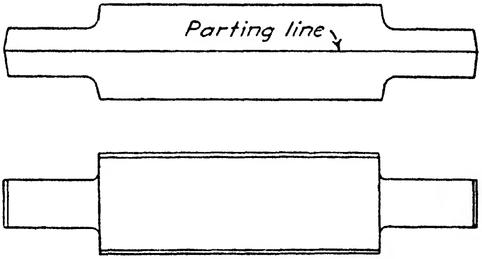

Showing use of Long Bosses when Axis is in Parting Line

FIG. 28.—Height of bosses having axes crossing parting should not exceed $\frac{2}{3}D$ but bosses with axes in parting can be of any length.

bosses can be forged when these have their axes in the parting so that the metal is forced into recesses of equal volume and above and below the parting plane. This is shown in Fig. 28.

Rule 15. Flash: Maximum allowable flash thickness should be specified but the specified thickness for hammer die forgings should never be less than 1/32 in. and rarely should exceed 3/16 in. Flash is the excess metal that forms a fin at the die parting around all hammer die forgings. The amount and thickness of the flash may be left to the die-forging shop, as a rule, but a maximum thickness should be specified though never at less than 1/32 in. The preferred thickness is about 1/16 in., but it may be as great as 3/16 in. for large hammer die forgings.

As allowable flash thickness increases, the number of pieces that can be produced by a given die increases. This is because all hammer dies wear at the edges of the cavity and, as the wear increases, the flash thickness increases. As the forge shop must remove flash with a shearing die and the pressure required increases as flash thickness increases, the producer rarely permits excessively heavy flash. Figure 29 illustrates what is called the "flash line."

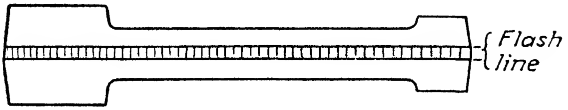

FIG. 29.—Location of flash line in a connecting-rod forging.

Rule 16. Simplicity of Shape: Strive for maximum simplicity in shape consistent with meeting other requirements. Where possible, the designer should consider how cost can be minimized by choosing a shape that, consistent with other requirements, is simplest in shape. This includes keeping the parting of the die straight, if possible, so that a locked die need not be used, and the use of straight rather than curved shapes. Curved forgings often introduce difficulties in diesinking and tend to reduce die life. Figure 30 indicates the relative simplicity of a straight as opposed to a curved part, the former being much easier to forge. The shape of the cross section of any die-forged part often has considerable effect upon its cost. A circular cross section is not only simple to sink in the die but also requires a minimum amount die maintenance. An elliptical cross section is not so simple to sink but is as satisfactory as far as die repair and maintenance are concerned. Neither the elliptical nor the circular cross section requires any draft when the axis or center line lies in the parting plane. Square and other similar cross sections are difficult to die sink and require considerable die repair and maintenance.

If parts are designed for large-quantity production, the designer may find it possible to make certain changes that will allow the die-forging manufacturer to forge more than one piece at a time in the same die. Such an arrangement is common for many different parts but is usually limited to parts that can be forged in straight dies.

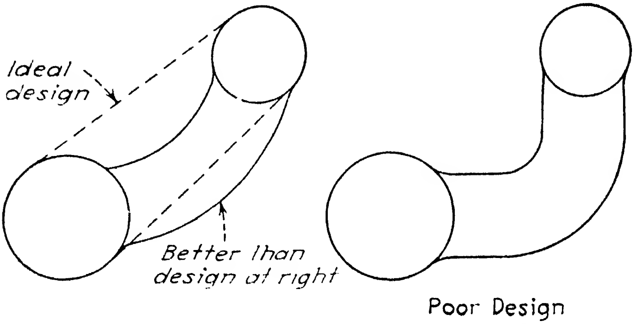

FIG. 30.—Parts that are straight, as indicated by dotted lines in sketch at left, are easiest to die forge, but a moderately curved part is better than one having a pronounced bend, as at right.

A part of very intricate shape may be possible to forge but require an excessive number of hammer blows. Such a condition results in die forgings with a very dense grain structure, which usually is difficult to machine. A large number of hammer blows is likely to cause cold shuts or laps in the forging, and these constitute serious defects.

Heavy flash always results when an excessive number of hammer blows must be struck and this is very hard on the trimming dies. Moreover, it does not yield a good grain structure at the point on the die forging where the flash has been removed. Die forgings with heavy flash distort more in heat-treatment than those with normal flash.

Upset Die-forging Rules. *Limitations.*—In designing a die forging where the part is to be manufactured by upsetting there are certain rules relating to the limitation of this process. Three basic rules were set up in a paper before the Drop Forge Association by E. R. Frost of the National Machinery Company and read as follows:

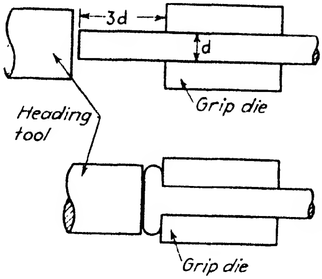

FIG. 31.—In upset forgings, the length of unsupported stock to be upset in a single blow should not exceed three times the diameter (Rule *A*).

Rule A: The limit of length of unsupported stock that can be gathered or upset in one blow without injuries is not more than three times the diameter of the bar.

Rule B: Lengths of stock more than three times the diameter of the bar can be successfully upset in one blow, provided the diameter of the upset is not more than one and one-half times the diameter of the bar.

Rule C: In an upset which requires more than three diameters of stock in length, and in which the diameter of the upset is one and one-half times the diameter of the bar, the amount of unsupported stock beyond the face of the die must not exceed one diameter of the stock.

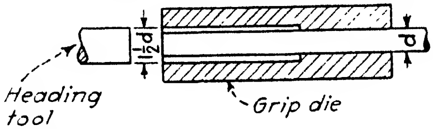

FIG. 32.—Stock longer than three times the diameter can be upset if diameter of upset is limited to one and one-half times the diameter by grip die recess (Rule *B*).

Rule A is illustrated in Fig. 31, Rule B in Fig. 32, and Rule C in Fig. 33. Figure 34 shows how it is possible to gather larger amounts of material than indicated by these rules by shifting the upset forging into additional cavities and striking it an additional blow in each cavity. Although it is possible to gather stock up to one and one-half times the diameter of the bar in a

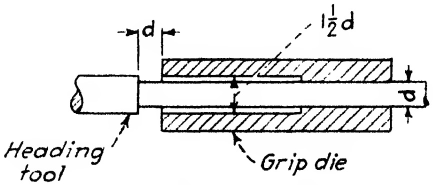

FIG. 33.—If upset requires a length of stock greater than three times the diameter to increase diameter to one and one-half times the diameter, stock must not be unsupported over a length exceeding 1 diameter (Rule *C*).

single blow, it is better in normal practice that the diameter of the upset, under Rule B, be kept to one and three-tenth times the diameter of the bar stock, where possible. If the diameter of the die cavity is reduced to less than one and one-half diameters of the bar diameter, the length of the unsupported stock can be correspondingly increased over the one-diameter length mentioned in Rule C.

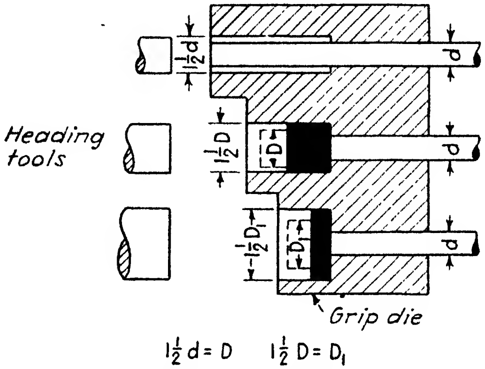

FIG. 34.—Use of more than one die cavity to obtain large upsets.

From these general rules the following rule is derived or restated in a form similar to others previously given:

Rule 17. Upsetting Limitations: Limit the amount of unsupported stock to be upset in a single blow to a volume equal to that of a piece of stock having a length equal to three diameters unless the diameter of the upset is not over one and one-half times stock diameter, in which case a larger volume can be upset, providing the stock does not extend more than one diameter beyond the die face.

In this connection it should be noted that, when three diameters or less is upset, a short die can be used. If a greater length of upset, up to one and one-half diameters, is upset in a single blow, the die must be extended beyond the gripping portion to prevent excessive bending of the bar and a longer die is required.

Though upsets larger than provided by the above rule are often required, they necessitate a die having two or more cavities and costing more, of course, than a single-cavity die. Thus another rule may read:

Rule 18. Amount of Upsetting in Relation to Die Costs: Unless the expense of a die having more than one cavity is

justified, the volume of metal upset should not exceed that of an unsupported bar having a length of three diameters, or a diameter exceeding one and one-half times the stock diameter.

This rule applies, of course, only when the cost of the die is charged against the forging. Where the upset requires two or more blows, adding a little to die cost may be economical. In general, however, it can be said that the larger the volume of metal upset the greater the cost, though there are, of course, many cases in which large volume upsets are desirable and may yield a result not obtained so economically by other means.

Rule 19. Shape of Forgings: Where costs must be minimized, design forgings that permit the use of round bars and that have only circular sections. Round bars are low in cost and fit die cavities that are of similar shape and are simple and inexpensive to machine. In addition, if the upset portion is of circular section, it is naturally formed to that shape without having to be upset into a confining recess, which would increase die cost. Moreover, circular parts are simple and inexpensive to machine.

Piercing Upset Die Forgings. Rule 20. Pierced Forgings: Design the forging so that it may be pierced when upset, provided that conditions permit employing a hollow part and that estimates indicate that costs will thereby be lowered. Reasons for this rule are given below and are valid in themselves. In general, however, pierced forgings involve more than one blow and at least one extra die cavity, the cost of which should be justified by benefits secured (including the saving in metal, which alone may justify any extra die and labor costs).

It is possible in all upset die forgings to add a piercing tool as an integral part of the heading tool and thus obtain die forgings that are hollow and therefore weigh less than a solid forging and require much less metal removal in boring or drilling operations if internal machining is specified.

Such piercing operations not only reduce material and machining costs but also greatly assist in obtaining a better grain flow within the material. This fact is illustrated in Fig. 35, which shows two automotive-transmission counter gears, of identical external shape, one having been forged solid and the other pierced. The latter has a much better grain structure for the purpose intended than the former and, of course, weighs much less.

Upset die forgings do not of necessity have to be pierced from end to end but may have a cavity pierced in only one end, which may later be machined or left in the original forged shape. In the case of socket wrenches, for example, it is possible to forge them to the correct size and shape without machining.

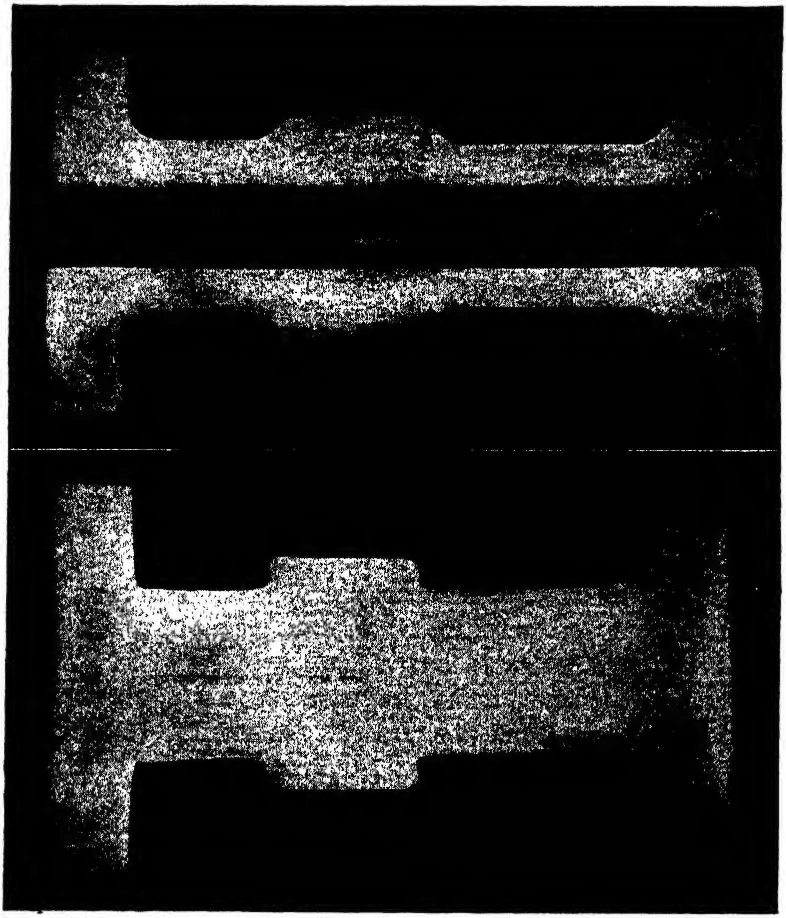

FIG. 35.—Comparison of grain flow in two automotive counter gear die forgings, that at top being upset and pierced and that below being upset only. (*Courtesy of Buick Motor Division.*)

E. R. Frost, in a paper before the American Society for Steel Treating, gives the following information:

In regard to the design of piercing tools, experience indicates that, if the operation is merely that of piercing, the best angle for the piercer end is an included angle of not over 60 deg. However, if the piercer must be used to square the end of the forging by pressing the stock against the end of the shear, then the included angle can be as much as 75 deg.; but the length of the stock being acted upon by the piercer should not exceed one diameter of the stock. If it is necessary that a square bottom be formed in the forging, then a square-end tool with slightly rounded corners should be used; but the distance the tool should travel in the forging should only be sufficient to square up the end of the forging.

Rule 21. Shape of Pierced Portions: Design, if possible, so that a pierced recess or hole is of circular section and has a conical end of or about 60 deg. included angle. This makes it possible to employ a piercing tool of minimum cost and one subject to minimum wear. Though tools having a hex or other symmetrical section are practical and necessary for some purposes, costs may be increased. Holes having a square bottom are preferably avoided as usually requiring an extra blow and extra tool (unless quite shallow), and a liberal radius should be provided on the end of the punch. In no case should the tool be so shaped as to produce an unduly thin wall where excessive shrinkage stresses may be set up when rapid cooling takes place.

Figure 36 shows the shape of the three piercing points described by Mr. Frost, and Fig. 37 shows an etched longitudinal section of a typical gear forging, pierced in this manner to indicate the grain flow.

Rule 22. Effect of Die Wear: Specify that, where wear occurs at partings, the excess metal should not be forced back into the forging in subsequent blows with forging turned in the die, if (as in gear forgings, for example) this results in a grain flow such as to weaken the forging or render likely an early failure.

As in any die-forging operation, the greatest die wear in upset die forging occurs where the cavity joins the parting plane, that is, at the joint between the grip dies. The effect of the die wear is to increase the diameter of the upset die forging along these lines. If die wear becomes excessive and the dies are not properly dressed, poor forgings may result. In such cases, the damage occurs in the final die impression where it is customary to rotate the forging in the die to force it into a true cylindrical shape. When this is done, the excess metal left at the worn parting line in the prior impression is forced into the forging, causing very poor grain structure along these lines. The effect is especially significant in the case of gear forgings, as this poor grain structure, concentrated at one or more gear teeth at opposite diameters, is likely to cause ultimate tooth failures. The cause may remain obscure unless discovered through the etching of a polished section of the gear tooth or teeth that fail. Figure 38 gives an indication of the result of incorrect practice of this

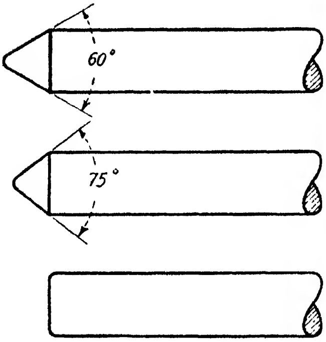

Fig. 36.—Types of upset forging piercing tools.

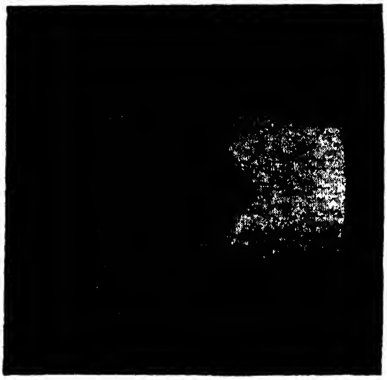

Fig. 37.—Longitudinal section of an automotive clutch gear die forging etched to show grain flow. (*Courtesy of Buick Motor Division.*)

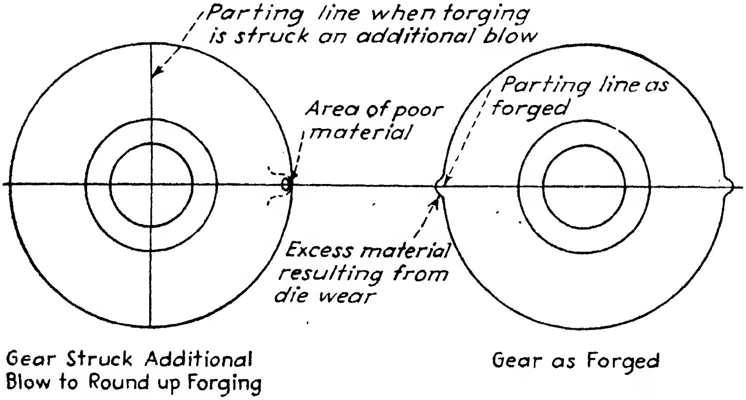

Fig. 38.—Effect of die wear and restrike blows on gear forging.

type. The remedy is to renew or rework worn dies or to specify that that faulty practice be avoided. Figure 39 illustrates a comparison of grain flow in gears made from bar stock compared with the more favorable structure obtained by upsetting.

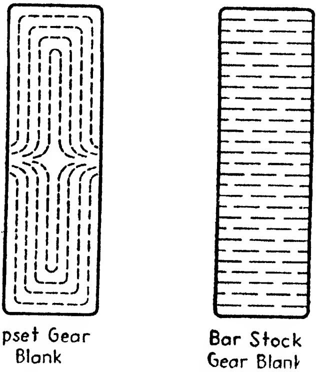

FIG. 39.—Axial sections through gear blanks to show, diagrammatically, the relative grain flow in an upset blank and one cut from bar stock of blank diameter.

Rule 23. Use of Sliding Dies: Avoid designs requiring the use of sliding dies unless, after conference with a forge shop, it develops that their use is essential to secure the results desired and the cost is justified by the results secured. In many die forgings it is desired to gather the material in the middle of a piece of bar stock. Such an operation is accomplished in upset die forgings through the use of sliding dies, sometimes referred to as "spring" dies of the type shown in Fig. 40. Sliding dies have not been recommended by many shops in the past but, where the rigidity and constant gripping pressure of modern upsetting machines are available, sliding dies are now finding considerable use. In one case $21\frac{1}{2}$ diameters of $\frac{7}{8}$-in. stock (Fig. 41) were successfully gathered in a six-pass sliding die. In designs of this type, liberal tolerances are necessary and close cooperation with

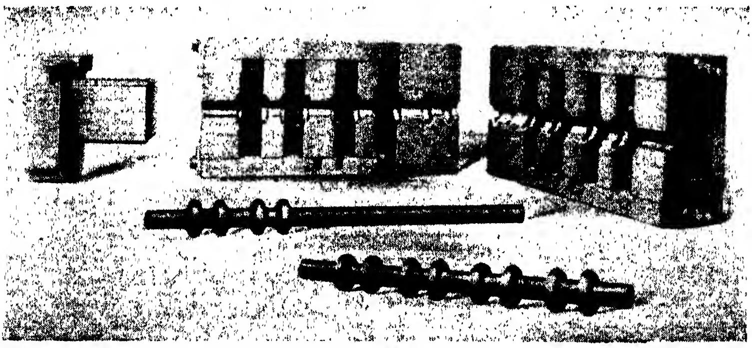

FIG. 40.—Sliding die used to make camshaft die forging. (*Courtesy of National Machinery Co.*)

the forge shop is recommended to make sure that the design is one practical to produce. Where it is required to gather stock near the end of a bar, but not more than a distance limited by the depth of a hole in the heading tool, stock can be gathered as illustrated in Fig. 42, without using sliding dies.

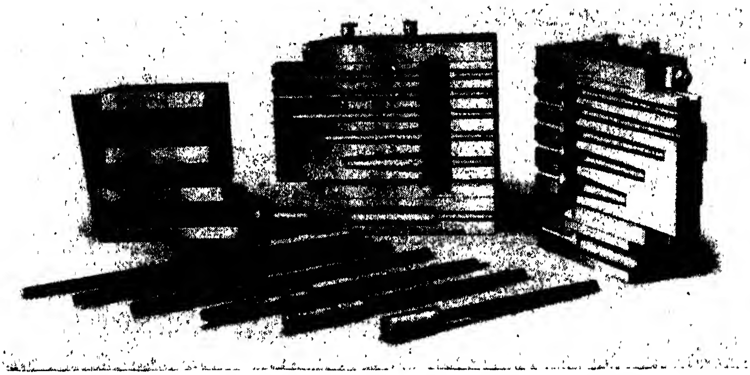

Fig. 41.—Sliding die used to gather 21½ diameters of ⅞-in. stock in six blows. Forgings as they appear after each blow are in foreground.

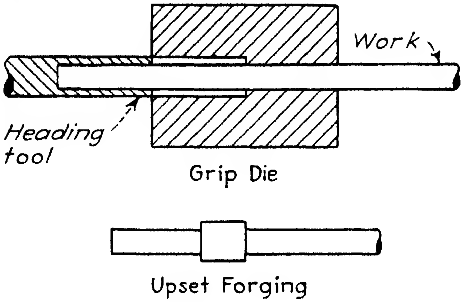

Fig. 42.—Method by which material can be gathered near end of bar without using sliding dies.

Press Die-forging Rules.—Rule 24. Draft on Outside Diameter: Specify at least a slight draft unless over-all cost can be lowered by specifying no draft. In press die forging, because of the use of knockout pins, it is possible to manufacture die forgings with no draft and to hold the dimensions of unfinished surfaces, within ±0.005 to ±0.010 in. of the nominal size. A slight draft is desirable to minimize wear on side walls of die cavity but may be offset by greater machining cost on forgings.

Rule 25. Draft on Holes: Specify draft on holes unless their depth is less than their diameter, increasing the amount of draft as hole depth increases. Straight holes with sides approximately parallel, that is, without draft, can be made in press die forgings if the depth of the hole does not exceed its diameter, although this is likely to increase the wear on the piercing tool. Holes requiring greater depth than the diameter of the hole must have some draft. The amount, or angle, of draft should increase as the depth of the hole increases, and the length of the punch in relation to diameter must not be so great that bending of the punch results. The shape of punch may well be the same as for those in upset forgings (see Rule 21 and Fig. 36).

FIG. 43.—Press die-forged steel gear dies in press and the forgings from billet to finished blank. (*Courtesy of Buick Motor Division.*)

Type of Dies.—Press forging is a relatively new process and is changing rapidly as a result of wartime use. It is too early to formulate rules for equipment that has been in use for only so short a time. Nevertheless, some knowledge of basic die types and of press forgings should be useful to a designer in understanding why this type of die-forging process is gaining so rapidly in favor with designers. Forging presses have been increased in capacity and only experience in using these new machines will indicate their limitations. Forging presses have demonstrated their utility, however, in the production of small- to medium-sized steel gear blanks (as in Fig. 43) and in the production of small nonferrous forgings, sometimes referred to as "die-pressed" parts. Aluminum alloy pistons have also been press forged advantageously (Fig. 44), although they have been produced more commonly in upsetting machines.

FIG. 44 Steps in press die forging an aluminum piston. (*Courtesy of Buick Motor Division.*)

Three general types of press die-forging dies are in general use. The most common is the so-called "open" die, such as that in Fig. 45. This die is similar to the drop forging die of the straight type and has, therefore, only one parting plane. The volume of the die forging is preferably equally divided between the two halves of the die.

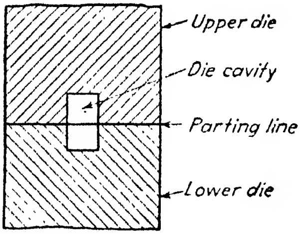

FIG. 45.—Open-type press-forging die.

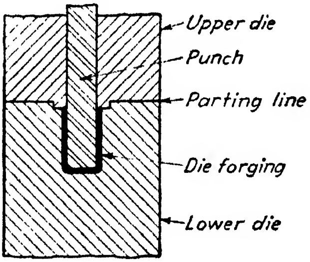

FIG. 46.—Extrusion-type press-forging die.

The second type of die is sometimes called an "extrusion" die because the metal is forced to flow into the annulus between the

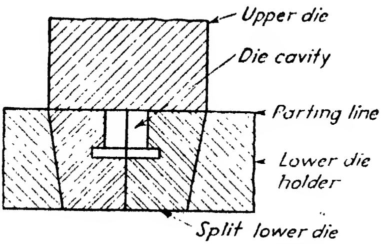

FIG. 47.—Split-type press-forging die.

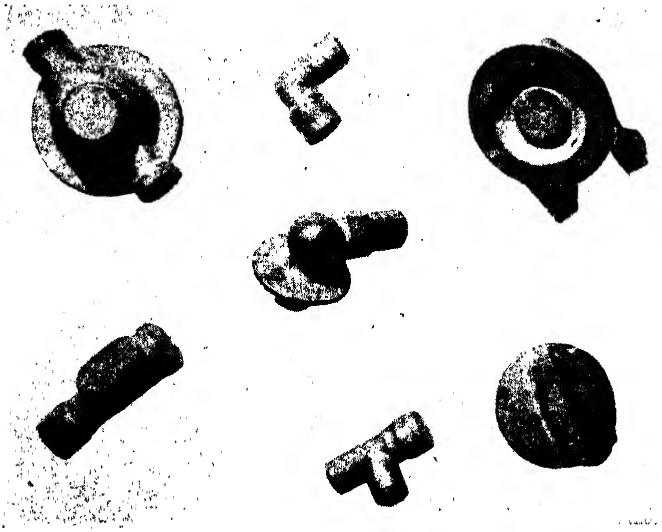

FIG. 48.

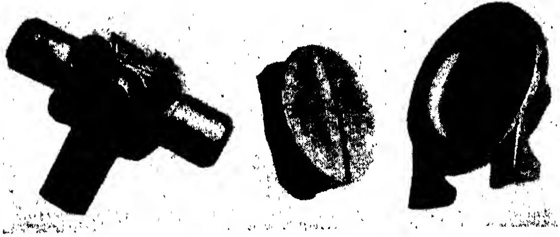

FIG. 49.

FIGS. 48 and 49.—Typical brass pressed-die forgings. (*Courtesy of American Brass Co.*)

punch and the die cavity. This die is composed of three parts: the two die blocks and a punch, as shown in Fig. 46. The lower die block, which fits into it, contains a close-fitting punch. In operation the die blocks are closed and then the punch is driven to its final position by further motion of the press, therefore the punch displaces or extrudes the metal slug, forcing the metal to fill the space remaining between the die-cavity walls and the punch.

Dies of the third type, shown in Fig. 47, are used only for press die-forging parts that have a flange and that could not be removed from a one-piece die block. In this case the die is usually in three pieces, the lower die block being split vertically so that it will separate and allow the release of the offset or flanged portion of the die forging. The outer surface of the lower die block is usually conical in shape and is held in a female mating holder. Punches may be used in this type of die and can either be integral or inserted into the upper die block.

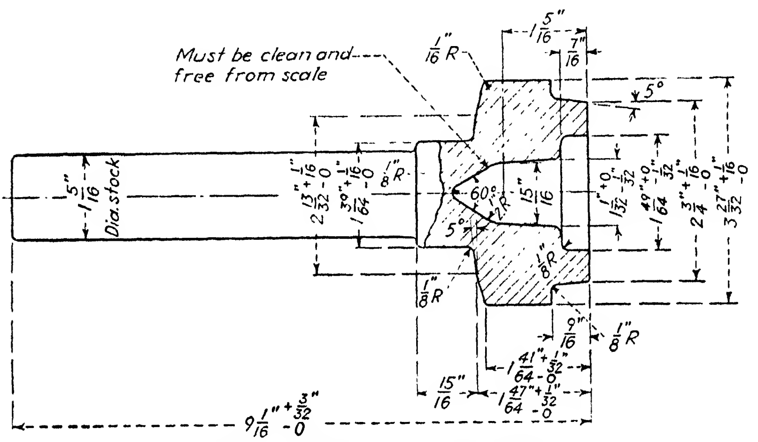

FIG. 50.—Drawing of an upset forging.

It is possible to make the split die block in more than two pieces and in such a way as to forge projections on the die forging in more than one plane, but the original cost as well as repair and operation costs are likely to be too high to make this type of die practical. Through the use of this type of die, however, forgings of a complexity comparable to certain die-cast parts can be obtained.

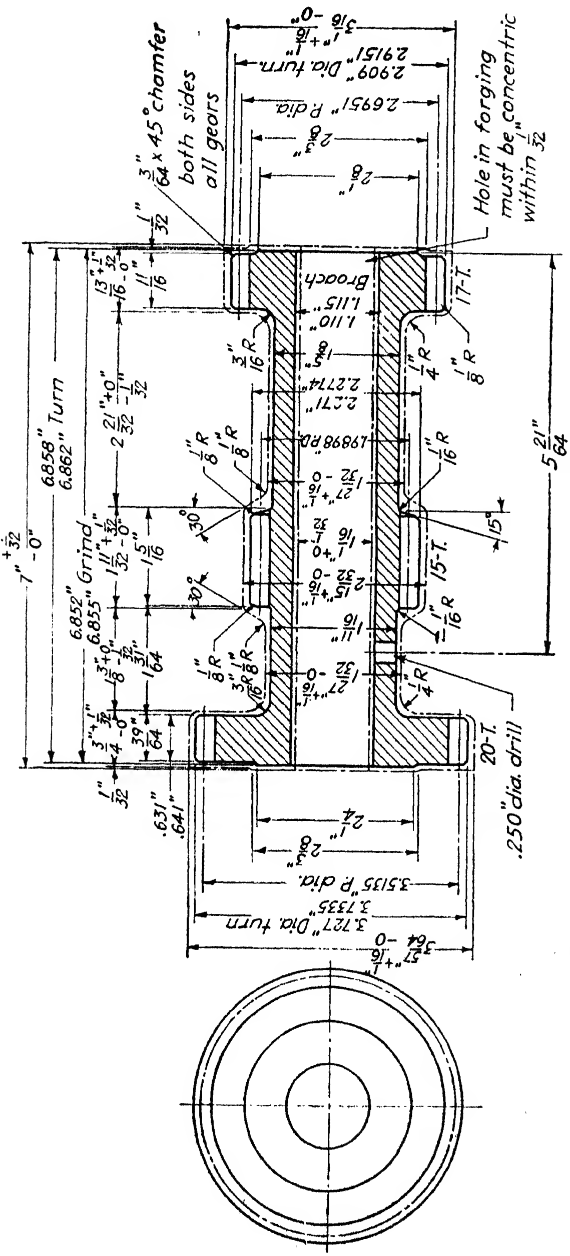

FIG. 51.—Typical combined forging and machining drawing of an upset and pierced gear forging.

Although it is still too early to formulate rules for the design of press forgings, some indication as to the shapes and proportions of brass die forgings that have been produced economically in presses is given by reference to Figs. 48 and 49.

Drawings.—In order to give the designer some idea as to correct dimensioning and methods used on forging drawings, Fig. 50 shows a separate forging drawing for the clutch gear illustrated in Fig. 37.

It is not common practice to have separate forging drawings of every die-forged part, although it is an Army Ordnance rule that all die-forged parts must have separate forging drawings. An example of such a combined forging and machining drawing is shown in Fig. 51, which is the transmission counter gear illustrated in Fig. 35.

Bibliography

Society of Automotive Engineers Handbook, N. Y. C.
American Iron and Steel Institute, *Proceedings*, N. Y. C.
American Society of Testing Materials, *Proceedings*.
"Aluminum and Its Alloys," Aluminum Company of America, Pittsburgh, Pa.
CARMICHAEL, COLIN: "Applying Forgings in Design," *Machine Design*, February, 1943.
———: "Applying Forgings in Design," *Machine Design*, March, 1943.
———: "Applying Forgings in Design," *Machine Design*, November, 1943.
CHASE, HERBERT: "Forging Aluminum Alloys," *American Machinist*, Part 1, May 28, 1942, Part 2, June 25, 1942.
CLARKE, E. C.: Forging Practice, Kent's "Mechanical Engineers Handbook," Design and Shop Practice.
"Commercially Important Copper Alloys," Chase Brass and Copper Company, Waterbury, Conn.
"Copper and Copper Alloys," Revere Copper and Brass, Inc., New York.
"Dowmetal Magnesium Alloys," Dow Chemical Company, Midland, Mich.
"Drop Forgings," *Product Engineering*, January, 1938.
"Forging Aluminum Alloys," *Iron Age*, Sept. 10, 1942.
FROST, E. R.: "Laws Governing Forging Machine Die Design," National Forging Machine Talk 27.
———: "Some Notes on the Quality of Upset Forgings," National Forging Machine Talk 72.
HARRISON, R. E. W.: "Relation of Modern Drop Forging to Machine Shop Practices," *Heat Treating and Forging*, January, 1931.
NAUJOKS, WALDEMAR: "Die Forged Parts," *Product Engineering*, June, 1938.
NAUJOKS, W., and D. C. FABEL: "Forging Handbook," American Society for Metals, Cleveland, Ohio.
SCRANNGE, L. E.: "Drop Forgings," *Product Engineering*, March, 1938.

STEVER, A. M.: "Fine Forgings Require Correct Heating and Grain Flow," *Metal Progress*, Vol. 21, June, 1932.

TATARENOFF, V.: "Power Economy in Hydraulic Press Forging," *Heat Treatment and Forging*, June, 1942.

THAIN, J. R.: "Notes on Cold Trimming Drop Forgings," *Heat Treating and Forging*, November, 1940.

THOMPSON, R. W.: "Grain Flow in Precision Drop Forgings," *Metal Progress*, Vol. 28, 1935.

WHEELON, O. A.: "Design of Forgings for Speedier Production," *Product Engineering*, Part I, September, 1942, Part II, October, 1942.

———: "Forging Design Data," *Product Engineering*, Reference Book Sheet, October, 1942.

———: "How Forging Design Details Affect Cost Estimations," *Product Engineering*, November, 1942.

CHAPTER VI

NOTES ON AND ACCOMPLISHMENTS IN HOT HEADING[1]

By A. E. R. Peterka

Designers of products that have heads or flanges larger than a body or shank are often more interested in what the product will do than in how it will be produced. Yet it is certain that the designer who knows how products are to be made and adapts the design to the manufacturing process to be used has much the better chance of gaining the desired results at minimum cost. Often he can save a great deal in tooling and production costs by heeding a few simple rules and—what is equally important in many cases—he can minimize costs by specifying and designing for that type of production which will require a minimum of available materials.

Nearly all headed products required in moderate to large quantities are produced by hot or cold heading or by the screw machine. Except for certain classes of products, such as small rivets (which will not be considered here), the screw machine often proves most economical when diameters are below, say, ¼ in., as then the total material machined away and wasted is small and rapid production is attained; but as diameter is increased the production of headed parts, or their equivalent, on the screw machine becomes slower and more wasteful, and heading by upsetting is both more rapid and much more economical in material. In consequence, bolts, screws, rivets, and a great variety of other headed parts are nearly always produced in cold or hot headers unless some special requirements which this process cannot meet economically are involved.

Choice between hot and cold heading depends largely upon (1) size, (2) materials suitable or available, (3) quantity required, (4) tooling cost, and (5) shape of head specified.

Size.—In general, if shank or stock diameter exceeds 1 in. and length is over 6 in., hot heading is employed, though there

---

[1] Published initially in condensed form in *Machinery*.

are some exceptions. Below these diemensions, cold heading is usual unless the material specified is not suitable for cold heading or unless quantities are small and the shape is one which can be made in a standard hot-heading die that is on hand.

Material.—For cold heading, the material must be sufficiently ductile to be headed at room temperature. Cold-drawn wire is employed, but several carbon steels are suitable (such as S.A.E. 1010 to 1050, inclusive), as are many alloy steels (such as S.A.E. 2330, 4140, and 3135, for example). Several nonferrous materials, including certain grades of brass and some aluminum alloys, can also be cold headed. Hot heading can be done with any alloy suitable for hot forging, but the steels most used include: S.A.E. 1010 to 1045 inclusive, 1110, 1120, 2330, 3135, and 4140, among others. These steels are commonly supplied in hot-rolled bars rather than in the coils of wire used in cold heading.

Quantity Required.—As a rule, cold heading is done only when quantities are quite large, with the minimum around 5,000 pieces, because the die cost is likely to be prohibitive *unless a standard die can be used.* In hot heading, however, where any length of piece above a given minimum can be run in a stock die for upsetting a given head, shorter runs, say for 100 pieces up, are often feasible. If a special head requiring a special die is required, the quantity must be sufficient to justify die cost.

Tooling Cost.—Unless a stock die can be used, the quantity must be sufficient to warrant die investment, but since the length of shank is fixed in automatic cold heading and can be varied at will in most hot-heading work, it follows that there is less chance of needing a special die in hot than in cold heading. A great many hot-heading dies, however, have to be built specially for the job, particularly when an odd size or shape of head is specified.

Shape of Head.—Both cold- and hot-headed products often have heads of identical shape and dimensions but, although all heads produced by the cold process can be duplicated in the hot process, the reverse is not true. A larger volume of metal can be upset hot than cold, and many hollow heads, not feasible in cold heading, can be formed by hot heading.

As a rule, somewhat closer dimensional limits can be held in cold than in hot heading and a somewhat smoother finish, especially on heads, is attained. Finish depends, however, in many cases, upon supplementary operations that follow heading, whether it is done hot or cold. The best guide to limits attainable is "Bolt, Nut and Rivet Standards,"[1] though this book does not indicate whether the products listed are produced by the hot or cold methods. Illustrations accompanying this chapter indicate, in some instances, however, what limits are held on certain typical hot-headed products. Threads on all headed products are either cut or rolled (the latter being preferred as being stronger, smoother, and faster to produce) and are held within the limits for the thread classifications (usually class 2 or class 3) for American standard threads. Although aircraft bolts, which have to be held within unusually close limits, are produced chiefly by cold heading when lengths are 6 in. or under, many which are longer than 6 in. are hot headed. In both cases, however, supplementary finishing operations are done after heading and heat-treating.

When steel of certain grades may be difficult to secure and when conditions permit a range of choice, designers should allow for the use of alternative steels rather than limit the producer to one particular specification and should specify carbon steels in preference to alloy steels unless the latter are essential. In addition, if the specification calls for suitable heat-treatment or for physicals that necessitate heat-treatment, much material can often be saved as against using parts that are not heat-treated and that have to be, for this reason, of much larger diameter than they would need to be if suitably heat-treated. A ½-in.–20 or even a $\frac{7}{16}$-in.–20 bolt of S.A.E. 1035 steel properly heat-treated, for example, can be used in place of a ¾-in.–10 bolt of hot-rolled 0.14–0.22 per cent carbon steel not heat-treated, yet have substantially the same factor of safety and, of course, effect a marked saving in the amount of steel used.

Heads that are upset cold are usually circular in sections at right angles to the axis but are often trimmed to square, hex, or other shapes. Marks of the shearing tools often show on the flat faces formed. In hot heading, the metal is soft enough to be upset into hex or square shapes, but there is a flash left at the bottom of the hex where the hammer clears the die and this flash

---

[1] American Institute of Bolt, Nut, and Rivet Manufacturers, Cleveland, Ohio.

has to be sheared off, hence shear marks show only for the thickness of the flash.

As hot forging requires that the metal be heated to forging temperature, the part forged shows the effect of heating unless subsequently treated, but, by using a reducing flame in the furnace, little scale is formed on the finished piece. As hot forging requires a furnace and a man to operate it, in addition to the labor of a hammerman, who must handle each piece separately, labor and fuel charges are higher than for cold heading and the rate of production is lower. Often this offsets the higher die charges for cold heading, but hot heading continues because it can be applied where cold heading is not feasible.

Hot heading is not confined, of course, to bolts or to other conventionally shaped parts in which a head is formed at the extreme end. It is possible to upset a flange that is not at the end of the piece and to form heads that are not symmetrical about the axis of the shank. Heads of T shape and conical or spherical shape are readily upset and it is possible to forge a cranked or offset part. Hollow heads, especially for socket wrenches, are usually hot headed, the hammer having a punch that forms and shapes the hole while the die forms the exterior shape.

Heads are often upset in a single blow when they are of moderate size and the amount of metal to be flowed into them is not too great, but several blows are often struck by the upsetter, the piece being shifted into a corresponding number of die cavities. Heads up to 2½ times stock (shank) diameter can be formed and the volume of the upset portion is sometimes such that as much as 5 or 6 in. of the bar stock is upset into the head, though this may take as many as seven blows. Of course it then involves a die having seven recesses and a hammer suitably shaped in successive positions to produce the upset without bending the end of the rod, which has been heated to forging temperature.

The accompanying illustrations, which, along with the particulars here given, were furnished by the Lamson & Sessions Company, give a good idea of some of the special parts produced by hot heading and show, in some cases, what dimensional limits are held. Parts that necessitate more than three or four blows are essential for certain applications, of course, but much die cost can be saved when the upset can be so designed that a standard head, for which dies are on hand, can be employed. Detail dimensions of such standard heads are given in "Bolt, Nut and Rivet Standards," referred to above.

Although it is entirely feasible to produce nut blanks by hot heading, and to do it with almost no scrap, production is much slower than that attained in the combined hot punching and shearing of blanks from flat strip stock of the required thickness. For this reason, nut blanks are usually produced by the latter method in machines designed especially for the purpose, although this method results in considerable scrap.

Figure 1 shows a typical hot-headed double end for a socket wrench and indicates how the ends of the bar, which is ⅝ in. in diameter, appear after the final blow. The first blow merely upsets the end. In the second blow, the end is pierced with a punch of circular section having a conical point. In the final blow, the hole is given its hex shape and, of course, the specified external shape and wall thickness. The depth of holes pierced in this manner is commonly limited to about 1½ times their diameter. A socket can be formed or other upsetting done on both ends of a bar, as indicated, providing the length of shank between is at least equal to the thickness of the die or, say, a minimum of 4 in.

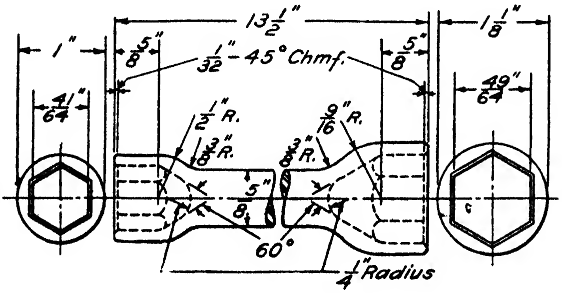

FIG. 1.—Typical hot-headed double-end socket wrench, the ends being forged hollow by a combination of upsetting and piercing to form hex sockets.

In Fig. 2 is shown a special part in which a large upset portion is formed between two cylindrical ends, one of which is of stock size. Because of the volume of metal in the upset, five blows are required to produce this piece.

To produce the rivet-shaped part in Fig. 3 from ½-in. stock requires seven blows, largely because of the volume of metal in the head compared with the diameter of the shank. It requires 5½ in. of bar to produce the head and this length has to be worked down in several blows, as otherwise the piece would be bent rather than upset as desired. As in all headed parts, there is a large saving in metal, of course, as compared with machining the part from a bar having the diameter of the head.

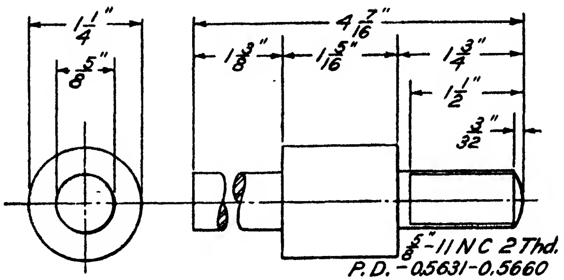

FIG. 2. A five-blow upset or hot-headed part in which a large volume of steel is gathered between the ends of the bar, which is of stock size.

Solid eyebolts, such as that shown in Fig. 4, are readily produced by upsetting. It is quite feasible, for example, to upset a head 3⁵⁄₁₆ in. in diameter and 1⅜ in. thick from stock which, in the case shown, has a diameter equal to head thickness. A head either thicker or thinner than the stock can be upset, however. Producers of such bolts furnish them blank or with the hole for the eye drilled or punched, as may be specified.

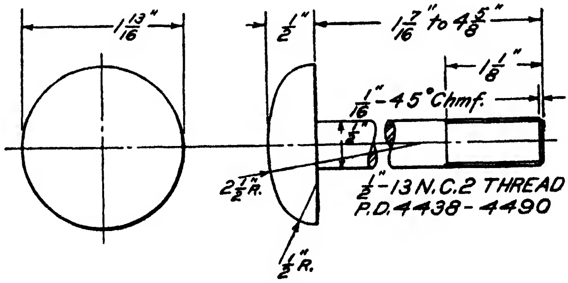

HEAD MUST BE HELD AS CLOSE TO DIMENSIONS AND AS SMOOTH AS POSSIBLE

FIG. 3.—It requires seven blows to upset the head of a rivet-shaped part of this size when stock size is only ½ in. Head volume equals that of a bar ½ by 5 in.

Figure 5 shows a Y-shaped head part produced by hot heading in three blows. It would, of course, be substantially prohibitive to produce a part of this type except by upsetting.

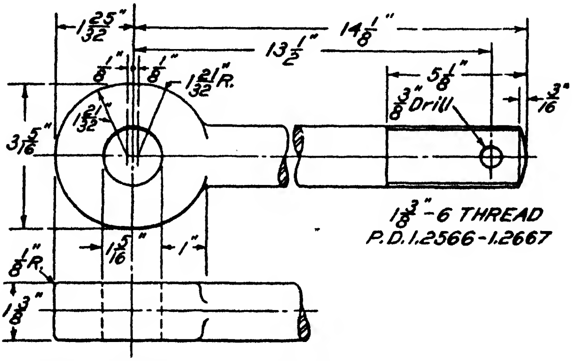

FIG. 4.—Eyebolts of this type are readily hot headed, but the holes shown are drilled.

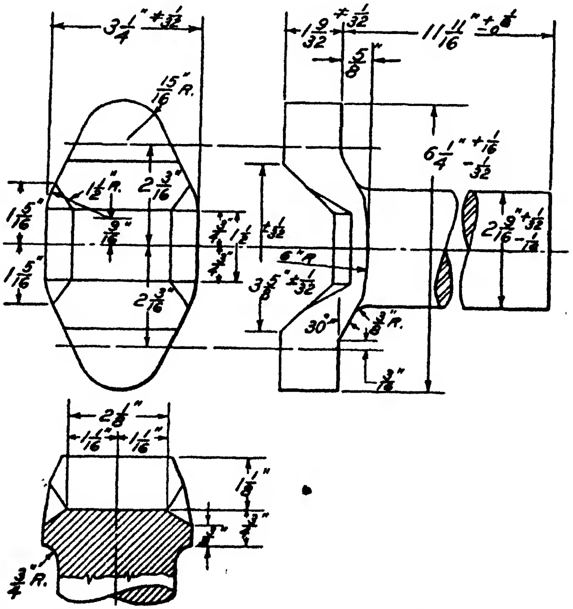

FIG. 5.—This Y-shaped part was hot headed in three blows. Production by other means would be almost prohibitive in cost.

Heads of spherical shape are readily produced by upsetting, the number of blows depending chiefly upon the volume of the head in reference to the shank, which is of stock size. Figure 6 shows the successive steps in upsetting a ball-shaped head in three blows, which are sufficient in sizes from 1½ to 2⅞ in.

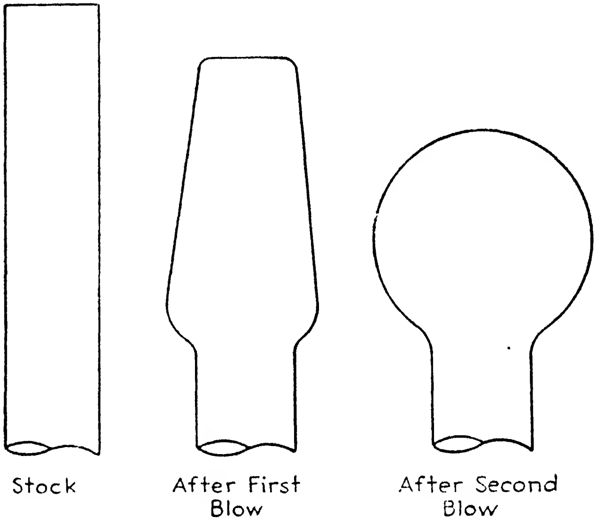

FIG. 6.—Parts having spherical heads are readily upset. Two or more blows are needed if the head diameter is much larger than that of the stem.

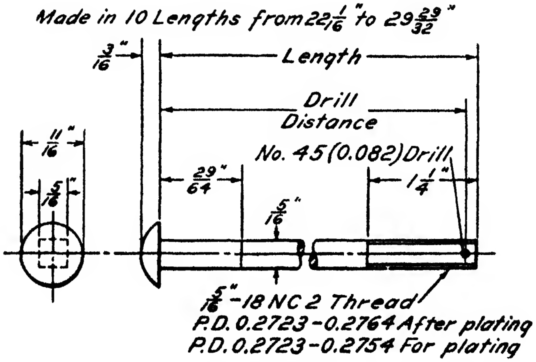

FIG. 7.—This hot-headed part has a portion of its stem under the head formed to square section although the stock and remainder of stem are circular.

Round bar stock is nearly always used in hot heading, but it does not follow that the shank of the piece produced must have a circular section throughout its length. The part shown in Fig. 7, for example, has a square section for a part of the length below the head. In producing this piece, the square portion is upset first, after which additional blows form the head.

Dardelet rivet bolts (Fig. 8) have a length under the head which is serrated or fluted. They are produced by hot heading, but usually in a special form of bar header, which operates much like a cold header except that the rod stock is heated to forging temperature before the heading is done and the stock is sheared to length in the machine. Similar results can be produced in upsetters in which the piece is handled with tongs, though the operation is slower than in a rod header which operates automatically.

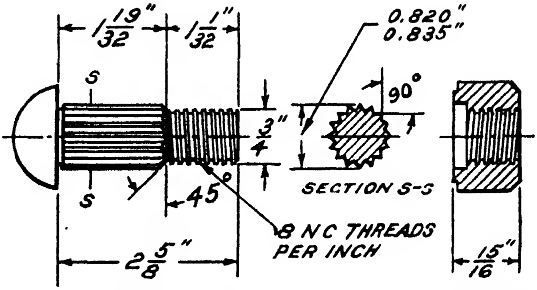

FIG. 8.—To produce this form of hot-headed Dardelet rivet-bolt with serrated stem, a special form of header, similar to a cold header, is used, but the entire bar is heated and is forged and sheared to length as fed.

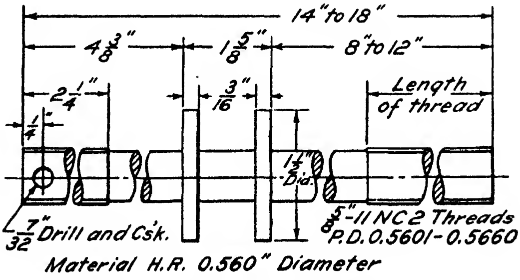

FIG. 9.—By the use of spring dies, a piece of this shape with flanges between the ends is produced in upsetting or hot-heading machines.

In Fig. 9 is shown a spool-shaped part produced in an upsetter using what are termed "spring dies" to form the portion having the two flanges. This is a somewhat unusual shape of piece and requires special tooling, but it is an example of one type of part that is feasible in hot heading when the quantities required justify the tooling cost.

Parts having a T shape, like that shown in Fig. 10, can be produced in two or more blows of the header. In the first blow, the piece is given a Y-shaped form, besides being upset, and in the final blow the cross bar is formed, giving the final shape.

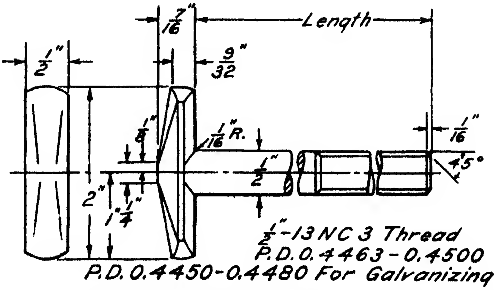

FIG. 10.—T-shaped parts are hot headed, being upset and split to Y shape in the first blow before final forming to T shape in subsequent blows.

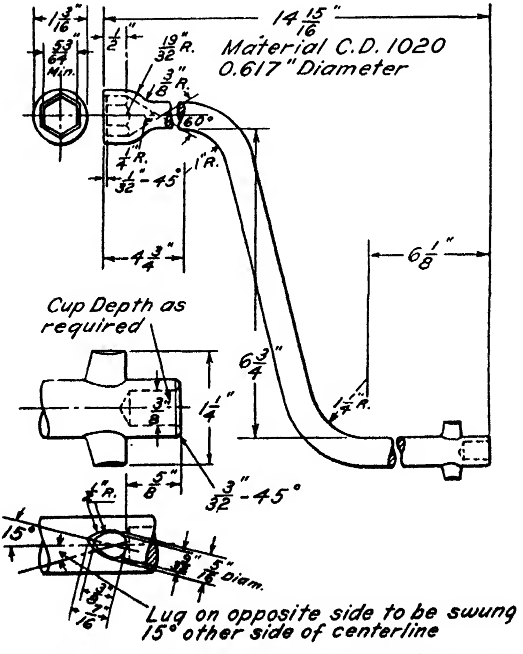

FIG. 11.—This hot-headed part is unusual in that it has lugs that are extruded by action of a punch, making a separate pin unnecessary.

Rather unusual, but entirely feasible in hot heading, is the production of parts having a cross shape. One such also having a recessed head, is shown in Fig. 11. The integral pins that project at each side are really extruded into holes in the die by the blow of the punch that forms the recess in the head. A hot-headed part produced in this way is much stronger and may cost less than one made without the integral pins and then drilled and a cross pin inserted.

It is entirely feasible to produce, by hot heading, heads that are offset to one side only, as in the clamping bolt shown in Fig. 12. A die forging is essential for the quantity production of such parts, and they are rapidly made in an upsetting machine.

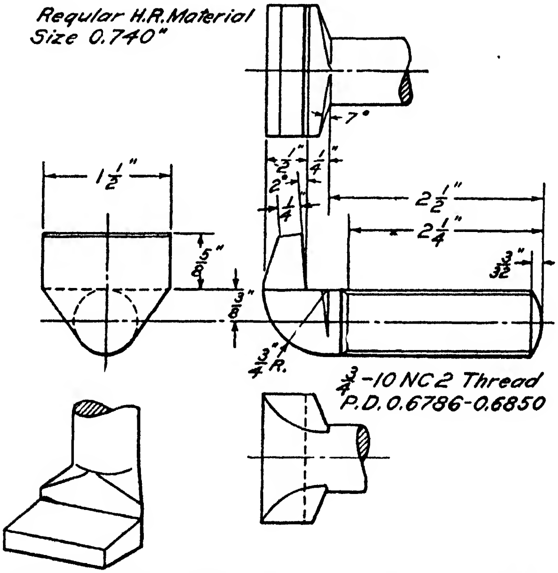

FIG. 12.—Heads which are L shaped (offset to one side only) can be produced by hot heading, as in this instance.

A part that has an upset head with a part-spherical recess at one side is illustrated in Fig. 13. After the head has been formed, the shank is bent to a cranked shape as shown, all the work being done in the upsetter. Socket wrenches having cranked handles are similarly made, as are also socket-ended cranks for hand starting of internal-combustion engines.

A cranked wrench having a hex socket at one end and a tapered socket of square section and 1¾ in. deep at the other end is shown in Fig. 14. This is merely another indication of the variety of parts that can be manufactured by hot heading.

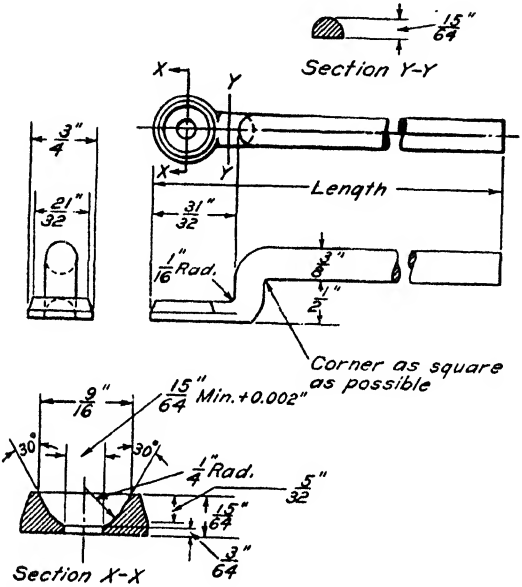

FIG. 13.—This unusual part is produced in a hot header, the double bend being made after the head with recess is completely formed.

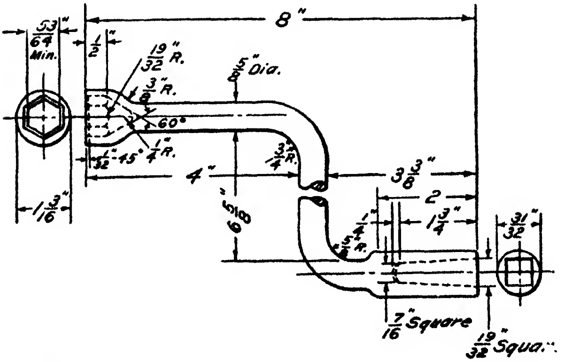

FIG. 14.—Cranked socket wrenches are often produced by hot heading, although the bending could be done also in a bulldozer.

Figure 15 shows a group of standard hot-headed products and gives some indication of the variety of shapes although the range of sizes shown is limited. Flash has not yet been removed from some of these parts. Many are produced in very large quantities and some in alloy steels or heat-treated carbon steel to meet exacting specifications. Many aircraft bolts produced by hot heading require polishing operations and are subjected to exacting tests that include magnetic tests for location of any superficial or subsurface flaws.

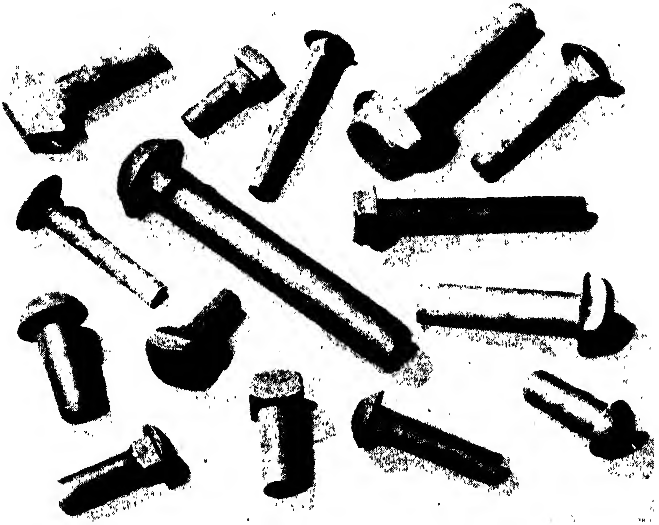

Fig. 15.—Products typical of those produced by hot heading, although many of larger diameter and many with much longer shanks are also manufactured. In some of those shown, the flash under the head has not been trimmed and in others the flash line, where trimming has been done, is readily seen.

In Fig. 16 are illustrated numerous special hot-headed products, some of which are shown in partly finished and some in finished form. These, of course, are only a few selected from hundreds of special parts manufactured by hot heading, but they give some idea as to the variety of parts that can be manufactured by the processes here dealt with.

Editor's Note.—A preponderant part of the products of hot heading are bolts or screws larger in diameter or longer than those produced by cold heading, large rivets, or similar products required, as a rule, in exceedingly large quantities. Such products are produced by hot heading rather than by cold heading partly because cold-heading machines for the sizes required are not available or are not economically feasible. Most of the products illustrated in drawings in this chapter may be regarded as special rather than standard, although some are standard and others are often required in large quantities. Nevertheless, the chapter does give an idea as to the range of products made by hot heading and of the possibilities of hot heading.

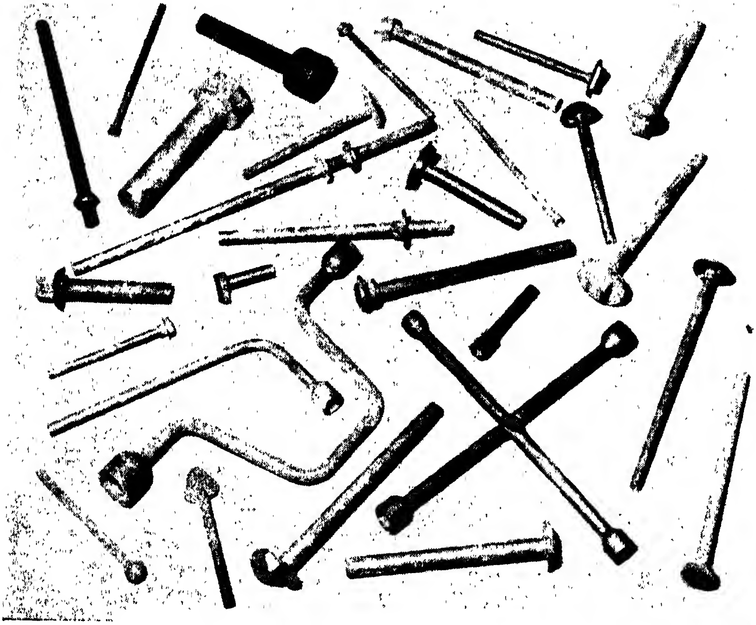

FIG. 16.—Socket wrenches, bolts, and other special parts produced by hot heading. The upset portion is usually at or close to one end, but metal can be gathered in flanges or other upsets at some distance from the end when required, as in some of the parts illustrated.

Although it would be possible to prepare a set of rules to be followed to advantage in designing hot-headed parts, such rules are not included in this chapter partly because such parts are merely a special class of die forgings, namely, upset forgings, and are subject to the rules given in another chapter on the Design of Die Forgings (of the upset type). In addition, the rules more or less parallel those for cold-headed parts except that allowance should be made for the fact that more metal is commonly upset per blow in hot than in cold heading, as the metal becomes softer and is more readily flowed when heated to forging temperature that when cold. On this account, it is easier to form a hex or a square head (without trimming the full depth of head) or a hollow head by hot heading than by cold heading, the former being the more versatile process, though often somewhat higher in cost.

By a study of the range of parts illustrated in this chapter, the designer should be able to judge whether a given design of part to be die forged should be produced on a hot header or on a less specialized upsetting machine. If in doubt in this respect or if the part is a borderline case, it is a simple matter to submit the design for advice both to specialists in hot heading and to those experienced in a more general run of upset parts. If the part lends itself to production by hot heading, it may well cost somewhat less in this form than if made in a less specialized and perhaps a less rapid upsetting machine. In that event, estimates should quickly determine which is the more economical type of production equipment for the particular part in question.

CHAPTER VII

NOTES ON THE DESIGN OF COLD-HEADED PARTS

By Herbert Chase[1]

Cold heading, in common with hot heading, is really a specialized type of die forging. Cold heading is done, however, on particular types of forging machines and, in general, by specialists, who produce the major proportion of the bolts, screws, and rivets manufactured. Although cold and hot heading are, basically, controlled by the same rules that govern forging (especially that type of forging called "upsetting"), the type of part is generally much more limited in shape and size, and, as the heading industry is largely separate from the forging industry, cold heading is considered separately here.

Cold heading is an upsetting process. It starts, as a rule, with stock of the size of the shank of the piece to be produced. The upsetting creates a head or a flange, usually, but not necessarily, at the end of the piece and commonly of circular section at right angles to the axis of the piece. The head or flange thus produced is usually trimmed to a square or hex shape, though there are many products in which it remains circular. Modern headers often perform, besides upsetting and trimming a head or flange, what is termed an "extruding" operation, in which the end of the shank or even its entire length is driven into a hole of smaller diameter and thereby extruded to that smaller diameter, with a corresponding increase in length. This extrusion is not commonly associated with forging, although many forgings are drawn down to less than stock diameter in split dies rather than by driving them into a hole.

Because cold heading is done with great rapidity and high economy, besides requiring no heating of the stock (which there-

---

[1] The author gratefully acknowledges the assistance of engineers of the Lamson & Sessions Company and of The National Screw & Manufacturing Company, who constructively criticized the manuscript and who furnished copy for illustrations.

fore is not subject to scaling), and, further, is extremely well adapted to making some exceedingly useful types of product, it has found extensive commercial application. It is, in fact, the basic process of the bolt, screw, and rivet industry, though, especially in large sizes, it is supplemented by hot heading and in very small sizes or in small quantities sometimes yields to the screw machine, especially where a threaded stem is required or where brass is specified.

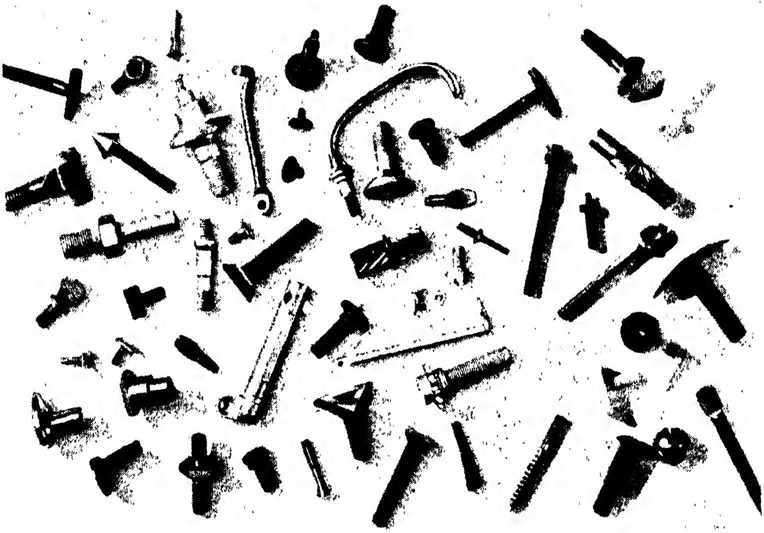

FIG. 1.—Assortment of parts virtually all of which are produced by cold heading. Nearly all are special and involve one or more secondary operations, including a cut or rolled threading.

Cold heading finds its widest use in the production of bolts, screws, and rivets, but it is not by any means confined to such products. It is useful in making any part, within certain size limits, which requires a head or flange or bulblike portion within its length. It is applicable only to ductile materials. Steels of medium to low carbon content are most used, but ductile alloy steels can be cold headed and many nonferrous materials also can be cold headed. Because the material remains smooth and free of scale, the finish of the cold-headed part is usually excellent and may even be mistaken for a machined part unless closely inspected. Where a smooth finish without extra operations is required, cold heading is preferred to hot heading, as the hot-headed part may have some scale. Dies also become rough through exposure to heat and to cooling water. It is possible to duplicate virtually all cold-headed parts by hot heading, except as to finish and as to dimensional tolerances. The converse is not always true, however.

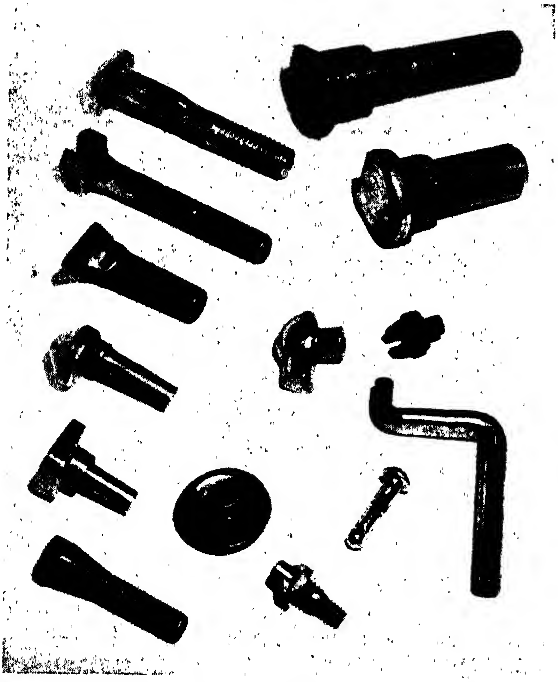

FIG. 2.—Cold-headed parts most of which are rather unusual in design. Nearly all are in steel but two of the smaller ones are in brass or bronze.

For steel, cold heading is commonly limited to wire between ⅛ and 1 in. in diameter and in length (depending upon diameter) from ¼ in. or shorter to 7 in. maximum. This applies to the automatic cold header. If a hand-fed (or tong-in) machine is used, any length of shank can be had. In ductile materials, especially nonferrous metals, very small rivets are often made by cold heading, but, if the shank must be threaded, it is sometimes cheaper to produce parts below 3/16 in. diameter on the screw machine, especially if quantities are not large, than to make them by cold heading and thread them subsequently, even though the waste in material is much higher. In cold heading, practically the whole of the stock goes into the piece. A waste, usually of 4 to 5 per cent, occurs in trimming the head, if it is not circular, and in stub ends of coils of wire.

Wire rather than rod is used. It is commonly cold-drawn and furnished in coils. This stock is fed into the machine through a straightening device and is cut automatically to length. The blank thus formed is held in the die and is stuck one, two, or occasionally three blows. In the first blow, the head is given a somewhat conical shape (or may be completely formed), and if the shank is to be extruded, this may be done in the same blow. Often the work is automatically shifted to one or two other die holes and is struck another one or two additional blows to complete the head. If a third blow is needed, a three-blow header is used. This commonly leaves a head of circular section but the shank below the head may be formed square or depart otherwise from the circular section. Subsequently, the head is often trimmed to a square, hex, or other shape by a trimming die. As many as 400 small screw blanks a minute can be turned out, but, as size increases, machines run more slowly. Thus, a ½-in., long-stroke, two-blow header may produce 80 or fewer bolt blanks a minute.

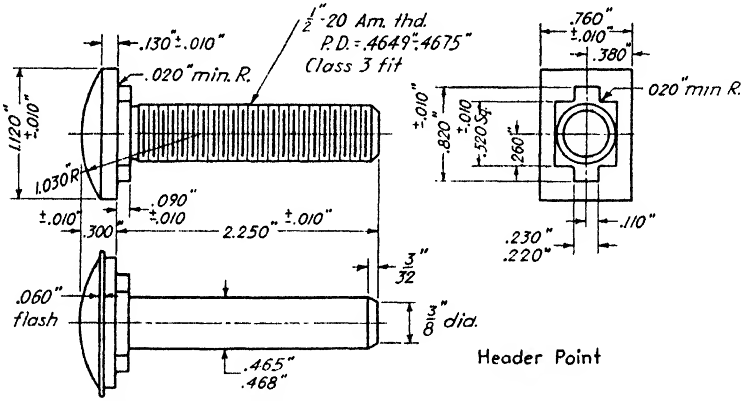

FIG. 3.—Fairly typical cold-headed part except that head is oblong and has an odd shape of boss under it. The rolled thread meets class 3 specifications. Lower view shows part as headed, with point, and before flash has been removed.

In no case does the header itself produce the thread, although there are some machines, called "boltmakers," which do turn out

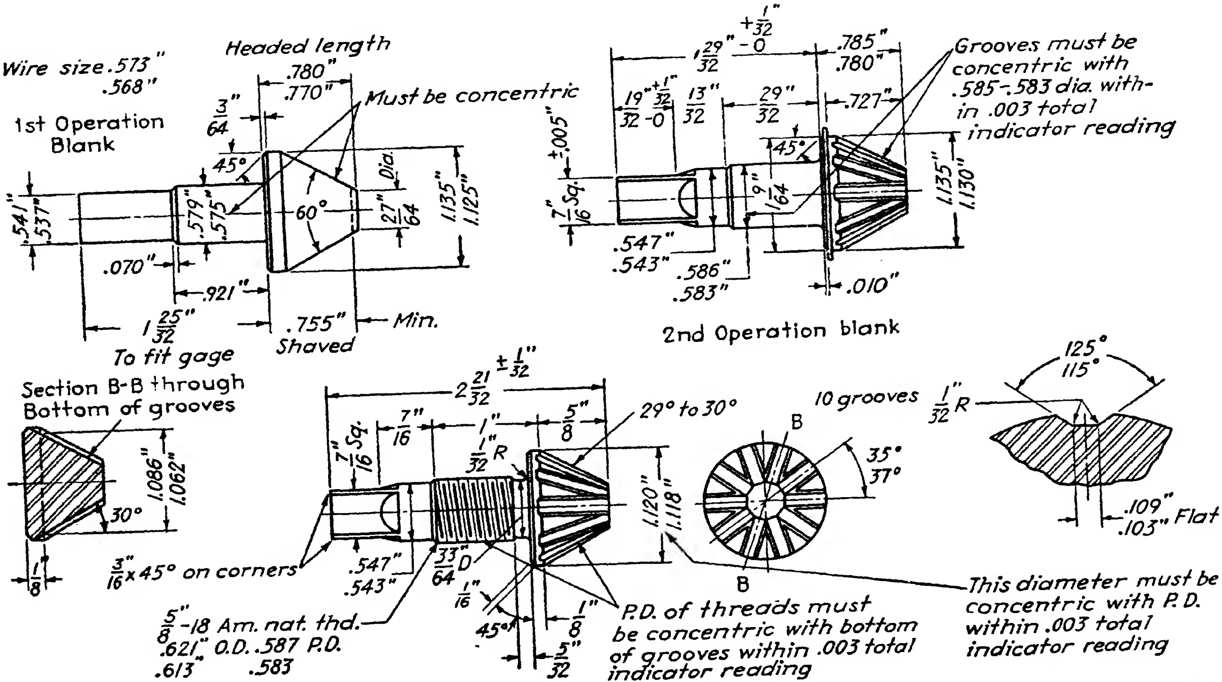

Fig. 4.—Though unusual in shape, this part is readily cold headed, including the radial grooves in the head. Several of the dimensions are held within close limits. The thread is rolled and outer end of shank is square.

finished threaded cold-headed bolts. Such machines, however, have separate stations for trimming the head, pointing, and threading. In general, when these operations are required, they are performed in supplementary machines. A large proportion of cold-headed products that require threading have the threads produced by rolling. With modern rolling dies, the threads produced are both smoother and stronger (according to foremost authorities) than cut threads and, contrary to some beliefs, closer dimensional limits than for cut threads can be held. Class 2 fits are common and even class 3 fits are produced successfully. The latter is now being done in quantity production, especially for aircraft bolts.

Thread rolling is a rapid process and results in a thread the outside diameter of which is, of course, larger than the diameter of the blank. If, therefore, the outside diameter of the thread must equal shank diameter (as with a cut thread) it is necessary first to reduce, usually by extruding, that portion of the shank which is later threaded. The rolling of a thread causes the metal to flow and form a grain that undulates, following the thread contour itself, whereas a cut thread cuts across this grain.

Although the head or flange formed by cold heading is commonly coaxial with the shank, it need not be. It can be offset entirely to one side or more on one side than on the opposite side. It is even possible to produce cranked parts by cold heading. When a flange is produced, its face can be corrugated or serrated if desired. Bosses can be produced under or on top of the head and flanges or heads can be crowned or made concave. Figures 1 to 7 show a variety of cold-headed parts, which give an idea of the range of shapes that are feasible, but some of these require supplementary operations aside from pointing and threading to attain the special shapes shown.

The amount of upsetting that is possible in cold heading is dependent in part upon the ductility of the material, the extent to which it work-hardens, and the types of machine employed. With ductile low-carbon steel, a three-blow header can upset a length of stock equal to about six times the diameter of the stock. As a rule, however, the diameter of head or flange produced is limited to, or about, three to four times stock diameter and the head volume to that of a length of stock equal to about four diameters, unless reheading is done. With materials that are less ductile or that work-harden rapidly, less upsetting can be done, unless the work is annealed before reheading operations. Such extra operations, though sometimes warranted, involve higher costs and to that extent tend to nullify the advantages of cold heading.

Nuts and hollow parts of similar shape can be cold headed with a loss of stock no greater than that in the hole to be tapped. It is well to compare the cost of such nuts, however, with those made on special machines, which generally employ flat stock and operate without upsetting.

There is a somewhat prevalent but definitely mistaken idea that cold-headed parts are inclined to brittleness and, especially, that the internal stresses set up in cold heading make it easy to break off heads. Certain head shapes, such as those on carriage bolts, must always have these relieved by subsequent annealing. Other shapes require no subsequent heat-treatment and yet can be relied upon to give satisfaction in service. Experienced makers of cold-headed products understand requirements in this respect and their advice should be followed.

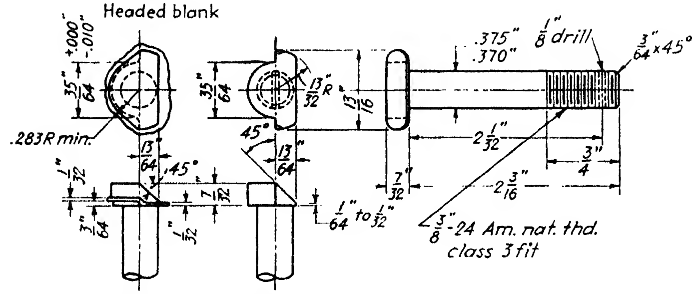

FIG. 5.—Cold-headed part with head which is of odd shape and offset, one face being at an angle of 45 deg. to axis.

Naturally, many materials for cold heading are greatly improved by heat-treatment. The cost of such heat-treatment is so small in relation to the increase in strength attained that it is amply justified by savings in material.

Materials for Cold Heading.—Carbon steels with carbon content up to about 0.50 per cent are suitable for cold heading, but S.A.E. 1035 is most commonly employed in the higher carbon range. Cold-drawn wire is commonly used.

Many alloy steels, such as S.A.E. 3135 and S.A.E. 2330, are employed for cold heading. Others now in common use include S.A.E. 1020, A. 4037, N.E. 8637, N.E. 8739, and S.A.E. 4140. Where stainless steels are required the 18-8 type is sometimes chosen, but straight chromium (12 to 15 or 17 per cent chromium) stainless steels are also used.

Nonferrous materials often cold headed include 17S and 24S aluminum alloys as well as certain brasses and bronzes. Nonferrous alloys are employed chiefly where special types of corrosive resistances, a special color or appearance, or good electrical properties are needed or, in the case of aluminum alloys, to reduce weight. Costs are naturally higher than for carbon steel or for low-alloy steel and strength is commonly much inferior to steel.

Ductility is a primary requisite for cold heading and steels of relatively low sulphur content are needed. These are quite different from the requirements for screw-machine stock, in which ease of machining is a primary requirement and sulphur content is relatively high, as a rule, for this reason. Since there are many products that can be made alternatively either on the screw machine or by cold heading, however, it is frequently good practice to specify alternative steels, one suitable for the screw machine and one intended for cold heading. Prices and delivery dates are then determined for both types of product and that which affords the better combination of delivery and economy is purchased, especially where, as is often the case, there is little to choose in respect to finish.

Tool Costs.—Heading dies and punches are required, of course, to produce cold-headed parts and special tools are sometimes needed also for supplementary operations. The cost of such dies and tools (unless stock tools happen to be available) is commonly too great to warrant making them unless this cost can be spread over a production quantity of parts. Once dies are made, however, they can turn out very large numbers of cold-headed parts at a very low cost per part.

Special vs. Standard Headed Parts.—It should be remembered, however, that companies specializing in cold heading always have on hand dies and other tools for standard headed parts in a considerable range of sizes and, if any of these can be made to serve a given purpose, the cost of special tools can be avoided. There are, too, cases in which standard parts produced by cold heading can be altered by some inexpensive secondary operation to make them serve special purposes. Then, too, although the standard product may have a hex or square head, the headed *blank* usually has a round head, which can be trimmed, if necessary, to a special shape, thus making use of a standard die except for head trimming. Moreover, a blank produced in a stock die can be threaded in different ways, as the production of the thread is usually a separate operation. Rolled threads, commonly used on cold-headed products, require that the portion of the shank to be threaded be smaller than the outside diameter of the thread and the diameter differs for each pitch of thread. This may make it necessary to reduce the shank diameter by shaving, milling, grinding, or extrusion before the thread is rolled. Cut threads are produced on shank diameter regardless of their pitch.

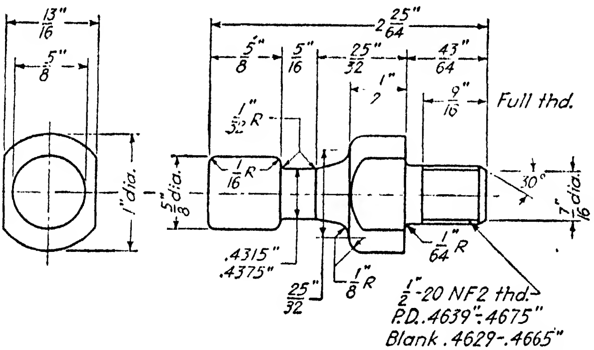

FIG. 6.—A part of this shape is readily blanked by cold heading but the necked portion has to be turned subsequent to heading and the flats on largest diameter are trimmed. Despite these supplementary operations, the part costs less and requires less material than if produced by screw machine from alloy steel.

If such possibilities are kept in mind, it may be easy to produce a special product from a standard blank with little or no extra cost for special tooling. In all cases, however, it is better to specify a standard form and fit of thread and, if possible, a standard head than to call for specials where they are not truly necessary.

Reference to the standards set up and to the parts listed by the American Institute of Bolt, Nut, and Rivet Manufacturers often makes it possible to specify a standard product readily available, either from stock or from stock dies, that will meet requirements without resort to a special design for which special dies are needed. But there are many cases in which special dies are fully justified.

Cold-headed parts are made, however, to a definite length in a given die and this length cannot be above a fixed maximum in a given automatic machine (as it can be in hot heading) to meet varying requirements. Naturally, a cold-headed part that is too long can be shortened in a separate operation and may, even then, cost less than a special die.

In automatic cold heading, the maximum blank length is determined by the stroke of the machine and thus cannot be altered for that machine. The following are the maximum lengths of blank for a series of long-stroke, two-blow machines of a well-known make for different stock sizes:

Stock diameter, in.	1/8	1/4	3/8	1/2
Maximum blank length, in.	2	4	5 1/2	7

Naturally, the maximum length of the headed part is shorter than the maximum blank length, the difference depending upon the amount of material upset into the head or flange produced. Where the length needed exceeds the maximum for a given machine, a larger machine is often employed. Thus a 1/4- by 6-in. bolt commonly is produced on a 3/8-in. machine.

Design Considerations.—As far as the author is aware, no rules for the design of cold-headed parts have ever been formulated heretofore. Those which follow may appear self-evident. They are not all-inclusive and some are subject to exceptions. All are intended as a guide in determining what should be done and what avoided *when the objective is a product of minimum cost* consistent with ability to perform the function intended.

As with other products dealt with in this book, it is well to consult with producers of the part intended for cold heading before the design (if it departs from that of the conventional cold-headed product) is so far advanced that changes are not feasible.

In most instances, the rules refer to the part as produced in the cold header *without* the supplementary operations that follow (in the average case) to complete the part. There are many operations, such as reheading, threading, drilling, pointing, shaving, slotting, sawing, turning, milling, and grinding, that may be performed in secondary machines and that no set of rules can cover. When the object is minimum cost, conservation of material, or quick delivery, no operations not essential in the finished product should be called for.

In most cases, the producer of cold-headed products has the necessary secondary machines to turn out a finished product and the designer need not, as a rule, be concerned as to how the operations are performed so long as the finished product meets requirements, provided, of course, he does not call for operations that are unnecessarily expensive. In many cases, producers of cold-headed parts have, in addition, equipment for hot heading and they may elect to use it in preference to the cold header if this is economically expedient unless, of course, some special requirement prevents it. As explained in another chapter, hot heading is likely to cost somewhat more per piece than cold heading, hence it is commonly used only when cold heading is not feasible or when tooling cost will be less, for the quantities ordered, if hot-heading dies are on hand. It should not be forgotten, however, that many parts that cannot be produced by cold heading are easily and economically produced by hot heading, including many in which the amount of metal to be gathered by upsetting is much greater than can be gathered by cold heading.

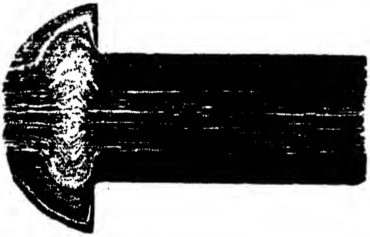

FIG. 7.—Etched section of cold-headed rivets. The flow lines indicate how the metal is displaced and why the head is stronger than if the rivet was cut from bar stock without upsetting.

While the designer usually need not specify the machines and methods used in making a given part as long as the part as delivered meets his specifications, he should design the part, as far as he can, to take advantage of the economies of cold heading (if he considers it suited for such production) and make sure that, if it is not produced by that method, it still meets his needs.

The accompanying drawings and other illustrations of cold-headed parts serve as an indication of certain classes of work done by cold heading (with such secondary operations as are needed or are usual in these cases) and may serve as a guide in designing similar parts. It is not feasible to go into greater detail in a brief chapter on this subject, but the appended rules should prove useful as a guide in designing cold-headed parts.

Rule 1. Design for the smallest diameter of stock, suited for cold heading, that will meet requirements at moderate cost.

Rule 2. Limit the amount of metal to be upset to the minimum that will meet requirements, using conventional head styles or types if possible.

Rule 3. Specify carbon steel of cold-heading grade unless specific requirements necessitate another type of material or unless it is certain that some other material will prove lower in cost or will justify such higher cost as may be involved.

Rule 4. Specify a head or other upset portion of the minimum diameter that is consistent with requirements and preferably one not over three to four times stock diameter.

Rule 5. Do not specify a special head, a special thread, or a special length if requirements can be met with *standard* heads, threads, and lengths.

Rule 6. If a special design is essential but requires only slight departure from a standard headed part, determine whether alteration of the standard part will meet requirements economically without necessitating a special die.

Rule 7. Never specify a square inside corner or sharp junction between head or flange and shank if a small radius will meet requirements.

Rule 8. Do not specify an over-all length greater than commonly supplied for a given size of stock unless assured of its availability by cold heading (or unless hot heading will meet requirements).

Rule 9. Permit rolled threads to be supplied unless the manufacturer finds it more expedient to furnish a cut thread.

Rule 10. When a shank requires a stepped diameter, provide for a generous radius or a taper at the step, unless extra cost for machining a square step is warranted.

Rule 11. When a taper is required on any part of the shank, its larger end must be nearer to the upset portion than its small diameter, that is, the taper must be outward, unless special machining is justified.

Rule 12. When a shank must have some portion that is not circular in section, minimize the length of this portion and do not specify sharp corners.

Rule 13. Never specify narrower dimensional limits than are essential or than are to be held in mating parts.

Rule 14. Unless wrench holds or other flats on edges of head or some odd contour is necessary, specify a head that is circular, as small in diameter as feasible, and neither too thin (less than three-eighths of diameter) nor too thick (more than three-fourths of diameter).

CHAPTER VIII

DESIGN OF PLASTIC MOLDINGS FOR ECONOMICAL QUANTITY PRODUCTION

BY ERIK FURHOLMEN

Nature of Molded Plastics.—Plastics, as referred to here, are materials capable of being formed under heat and pressure in steel or equivalent molds. These materials are chiefly organic and synthetic. There are often added to plastic materials nonplastic fillers such as wood flour, asbestos, cotton flock, and the like. The resulting mixture is lower in cost and often produces a much stronger product than if no filler were used. When a mixture of this kind is molded, the plastic acts as a binder that causes the molded piece to retain its shape. Coloring matter is usually added to the plastic whether a filler is used or not. Plastics for molding are commonly furnished as dry powders or granules, but, when softened by heat, that is, fluxed, they take the form of the mold cavity or cavities and, when properly cured, or set, are ejected. In general, little, if any, finishing is required to make the moldings ready for use. The molds are, of course, permanent and, generally, hundreds of thousands of molded parts can be produced in the same mold without its wearing out, unless the materials to be molded are extremely abrasive or require exceptionally heavy pressure (or both) or unless the mold has somewhat fragile moving parts or is unusually complicated. When designing a mold that is subject to excessive wear or breakage, due allowance should be made for convenient replacement of parts subject to wear or breakage.

Molded plastics are gaining rapidly in importance to industry and are steadily finding new applications. Plastics vary from the toughest macerated materials, some of which are even used in the drilling of deep wells, where moisture, rock, and high temperature are encountered, to those used in the making of delicate ornaments having all the colors of the spectrum. Common applications include objects such as radio cases and similar housings in a great variety of sizes and shapes, handles, telephone and other electrical equipment, combs and other toilet articles, pen and pencil barrels, watch crystals, parts for musical and other instruments, tableware, surgical appliances, toys, novelties, and uncounted other products.

A designer considering plastics for his product has a wide choice, as the properties of various plastics vary greatly, but, of course, any one material may not possess all the desired or required properties. To make sure that the plastic best suited for the particular product is chosen, it is well to consult a good custom molder or plastic-material supplier before the design is too far advanced.

Growing Importance of Moldings in Products for Quantity Production.—Molded products are not only desirable for numerous applications but are demanded by the trade in many cases, partly because of the endless variety of shapes into which they can be molded.

Few materials excel plastics in respect to appearance. It is possible to have anything from a soft matted surface to one of glistening polish. Colors are almost unlimited and are generally substantially fadeproof although some materials are subject to fading or other color change. Contrasting colors can be secured either by external application of paints or by molding different parts in different colors for later assembly. Combination with metal parts also affords desirable contrasts.

Among the reasons why plastics are growing in favor is their pleasant feel. This results from their being poor conductors of heat and being so readily molded with smooth surfaces and in shapes that fit the hand. This is an important consideration for the countless articles that have to be touched or handled. Growth in the use of plastics is attributable in part to a more general appreciation of their utility and to the economy with which they are converted into diversified forms. The choice available is constantly increasing and costs are being lowered both by material suppliers and by more rapid and less costly molding procedures.

Reasons for Choosing Plastics over Alternative Products.—There are many reasons for the preference of plastic moldings in our modern world. Outstanding among these are the following:

1. Plastics are converted rapidly and economically into an almost unlimited variety of shapes, many of which cannot be made so readily by most other methods of production. Streamlined and other shapes having clean and attractive appearance are produced without difficulty and often in a single piece, whereas most other methods of fabrication require more parts, more operations, or both.
2. Many plastics possess transparent or translucent qualities coupled with lightness and strength, qualities seldom found in other materials and important for many industrial products.
3. Color range is unexcelled, the choice of colors available being sufficient to meet almost any requirement. Not all colors, however, are available in every kind of material and not all have the same degree of colorfastness.
4. Practically all plastics have excellent insulating qualities, both electrical and thermal, and often can serve not only as insulators but also as structural members, which, if desired, may be quite complex in shape.
5. In general, production is relatively rapid and can be in multiple when, as often happens, this results in increased economy. Material cost per piece is moderate and parts can often be produced more economically than if fabricated by other methods. This is especially true when the subsequent finishing operations usually required on metal parts are considered. As a rule, the removal of flash or gates or both on molded parts is a rapid and inexpensive operation.

Dimensional Limitations.—Within certain size limitations, a large proportion of parts that can be cast in sand or in dies can be molded of plastics, provided the plastic chosen has the required strength and other necessary properties. If, however, cores must be used, they must not be fragile and must be of such shape as to permit of ready withdrawal from the molded part and remain intact for subsequent use. Sand cores, such as are used in many metal castings, are not practical in the molding of plastics, and complex metal cores, or cores which are easily bent or broken are seldom feasible.

Plastics lend themselves most economically to the molding of *relatively small objects having thin walls of fairly uniform sections.*

Any great or radical departure from this slows the operating cycle and causes considerable increase in the cost of the piece. The maximum size of piece that it is practical to mold is not definitely fixed but depends in part upon the size of press equipment available. Parts as large as children's coffins have been produced commercially in steel molds, but few parts larger than good-sized table-type radio cabinets are in extensive production at present. A case, housing, or similar part becomes relatively expensive if its length exceeds 18 in. or if its width and depth are, approximately, more than 12 in. If wall thickness exceeds 5⁄16 in., curing time becomes so long that expense is further increased. The above is based primarily upon a molding made of thermosetting materials such as phenolics or ureas, but also applies to thermoplastic material. With thermoplastics, present injection molding presses generally do not produce economically parts weighing over 24 to 32 oz. and the wall thickness preferably should not exceed 1⁄8 in. Minimum thickness of 1⁄32 in. is satisfactory if the area of the part is not too large. Parts too large for production in one piece can often be made, of course, in two or more smaller sections that can be fastened together later by any of several means.

The foregoing is based upon present standard molding practice. Other methods of molding, some of which are now in the experimental stage, give promise of becoming practical but are not yet in extensive commercial use. All recommendations here made apply to the use of well-established methods, materials, and equipment, unless otherwise indicated.

Types of Molding Processes.—As the method of molding employed has some effect on the design of parts to be molded, as well as upon the type of plastic chosen, the designer should know, at least in a general way, what primary types of molding (and of molds) are employed, and what the molding process involves.

In nearly all molding, (except injection molding) the mold is first heated, either electrically or by steam, to the required molding temperature. Molds in general comprise two parts. The female part contains the cavity or cavities, shaped to give the required contours and external shapes to the part or parts to be molded. The mating portion of the mold includes what is variously termed the "plunger," "ram," or "force," which is shaped to form that part of the piece with which it makes contact. That portion of the mold containing the cavity is fastened usually to the lower press platen, which is often movable, and the force is fastened, as a rule, to the upper platen or head of the press. When ready for molding, a weighed amount of material, usually in powdered or granular form, is placed in the mold cavity, whereupon the operator closes the mold. The plastic is thus subjected to heavy pressure, as well as to the required temperature and, while in truly plastic form, is forced to assume the shape of the mold cavity.

If the plastic is of the thermosetting (permanently hardening) type, the heat causes it to cure and to harden. If a thermoplastic is used, the mold must be cooled (unless already cool) to harden the plastic. When the plastic is hard, the mold is opened and the molding is ejected.

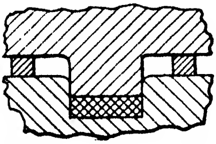

FIG. 1.—Positive mold having a force that fits cavity.

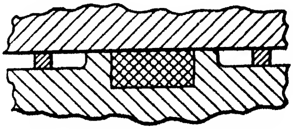

FIG. 2.—Flash type of mold.

There are several types of molding, and, in some types, different types of molds are used. "Compression molding" is done, as a rule, with heated molds, usually in vertical presses. It consists of applying heat and pressure to the plastic, which is first loaded into the mold cavities, usually by hand. This method is, at present, the one most extensively employed. It permits of using either the thermosetting types of plastic (some of which are among the lowest in cost per pound) or the usually more expensive thermoplastics.

In compression molding three distinct types of molds are used: Figure 1 shows what is known as a "positive" type, in which the force, which is a close fit in the cavity, compresses the material, as a ram or piston might do. The maximum or closing position of the force is limited by landing strips placed on top of the cavity block or chase. This type of mold produces a very dense molding, providing that the material is accurately weighed or measured and that a tight fit is maintained between the force and the cavity. Certain materials require this type of mold to ensure satisfactory results. Flash or overflow (if any) is always vertical.

Figure 2 shows a flash type of mold, the flash formed being horizontal. There is no well above the cavity. It is often essential, with this type of mold, to use preforms shaped almost to the size and shape of the finished product. Furthermore, great care must be exercised in closing the mold as it is necessary that the material be partially softened or fluxed before the final closing. Flash-type molds sometimes cost less than positive types but are not used extensively because of the foregoing objections and because, since there must be enough plastic to more than fill the cavity after the plastic is compressed, a thick flash with considerable waste of material occurs.

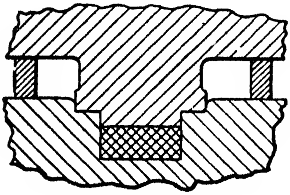

FIG. 3.—Semipositive type of mold.

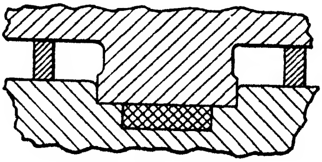

FIG. 4.- Alternative design of semipositive mold.

Figure 3 illustrates what is generally known as a "semipositive" mold. It is in reality a combination of the flash type and positive type. The material is compressed into the cavity, much as in a positive type. The overflow or flash is first extruded upward but is further trapped and cut off upon the horizontal land. The flash at this land is generally from 0.003 to 0.010 in. thick.

Figure 4 shows an alternative design of a semipositive type of mold. In this design, the force does not telescope into the cavity, as in Fig. 3, but rather into the *well* above the cavity proper. The land or cutoff is horizontal and the flash forming here is of the same thickness as in Fig. 3. Semipositive molds are usually required in the molding of urea-formaldehyde plastics, and the type illustrated in Fig. 3 is preferable.

Another type of injection molding is being done on a limited scale with certain kinds of thermosetting materials. This involves heating the plastic in a cylinder that is separate from the mold cavity proper but is connected thereto by a gate or gates. As soon as fluxing occurs, pressure of the ram forces the material through the gate into the heated cavity, where the plastic remains until cured. Slightly more than enough plastic to fill the cavity (or cavities) and the necessary gate is placed in the cylinder for each filling. A thin flash remains in the cylinder and, as the flash and gates harden permanently, they constitute waste. This process is sometimes referred to as "transfer molding."

"Cold molding" is really a form of compression molding but involves differences as compared with the conventional form of compression molding. Some special equipment for mixing the material in batches shortly before it is to be used is required. The material is then fed in measured amounts into an unheated mold and is quickly rammed into the cavity or cavities, using, in general, a toggle or other quick-acting press. In consequence, the process is sometimes referred to as "impact molding." Moldings are then immediately ejected and, after being loaded on suitable trays, are placed in an oven to be baked for several hours. The filler used in making these plastics is largely asbestos. Among the binders used in the material are bitumen or pitch, cement, resins, and oxidizing oils. The first two are least expensive and the most plastic. Cement plastics are refractory and quite brittle when cured. Resin types are physically stronger than those with pitch or bitumen binders but are somewhat less heat resistant. Cold molding is done, as a rule, quite rapidly and usually with molds having one or two cavities, but subsequent baking of moldings requires special equipment and considerable time. There are variations of the process, in some of which the mold is heated although moldings do not remain in it long enough to cure. Rubber is among binders sometimes used, especially in molding storage-battery cases.

When Molded Plastics Should Be Used.—In general, plastics in molded form should be used whenever engineering considerations indicate that the properties they possess will meet requirements, provided of course, the number of parts needed is sufficient to justify mold costs and that the cost per piece is as low as or lower than the cost attained by other methods of production with materials that are satisfactory for the purpose. It is seldom economical to employ plastic moldings when quantities required range less than 1,000 to 5,000 pieces, but when quantities exceed these figures and the part required is well adapted for molding, marked economies are often attained by making use of the process and the plastic materials available.

Molded plastics are especially adapted for use where one or more of the following conditions must be met:

1. Where a dielectric is required and the shape is not such that a punching from a sheet material or a part made from rod or tube would be cheaper.
2. Where the shape of part and other conditions are such that molding is an economical means of production.
3. Where elimination of an applied finish is essential or adds to over-all economy.
4. Where color or decorative effects available are advantageous.
5. Where transparency, translucency, or unusual opaque effects are desired.
6. Where minimum weight is required.
7. Where a high degree of corrosion resistance is important.
8. Where the low heat conduction rate is advantageous, as in handles and heat-insulating parts.
9. Where such properties as wear resistance, unusually smooth surfaces, freedom from odor and taste, resistance to moisture, moldability around inserts, a considerable degree of resilience, and/or certain other properties outlined in other sections are desirable.

Not all plastics yield all these properties or advantages in like degree, but the foregoing list includes all the major and several less important advantages that can be gained by the intelligent application of molded plastics. In some cases, molded plastics can be substituted with advantage for metals and often for nonmetallic materials, but in general, plastics are much more brittle and usually lack the strength of metals. Their cost per pound is nearly always higher than that of those metals in the commonest and most widely used forms, but their low specific gravity sometimes offsets this disadvantage. Production rates are commonly lower than for the more rapid of the metalworking processes, but this too is often offset by savings in finishing costs and/or other economies that make it wise to consider molded plastics wherever their unusual properties give promise of the economies and other benefits so frequently attained.

Comparatively young, but having enjoyed a phenomenal growth, is the process known as "injection molding." Thermoplastic material in granular form is fed from a hopper by gravity into a heated cylinder, from which it is forced by a plunger into the mold after the material has been rendered plastic by the heat. High pressure is required to force the plastic through heating passages, orifice, nozzle, and gates into the closed mold or cavities, where the material sets. The mold is kept constantly cool, generally by having water circulating through channels around the cavities. Injection molding is done at a very rapid rate, with 75 to 300 shots, or mold fillings, per hour. The mold is opened and the finished parts are ejected almost immediately after filling. Unless inserts are required, the operation is practically automatic.

Types and Characteristics of Molding Plastics.- There are two general types of molding plastics, *thermosetting* and *thermoplastic*. The former undergoes a chemical change when molded and, as a result, the change is permanent; that is, the plastic cannot again be softened sufficiently to reshape it. It also becomes insoluble. The temperature under which it is molded is usually considerably higher than that used with thermoplastic materials and the finished product is capable of withstanding temperatures in some cases up to 350°F. or higher without injury.

Thermoplastic materials, though hard and relatively rigid at ordinary temperatures, begin to soften under temperature often as low as 140°F. The material when molded undergoes no chemical change and subsequent heating somewhat beyond its softening point returns it to its plastic state. Except for these two fundamental differences, many of the properties of each type of plastic are often similar.

Nearly all plastics come in various grades or types, each suited for one or more diversified applications or for certain classes of uses. Phenolic plastics, for example, come in such types as general purpose, heat resistant, low (electrical) loss, impact resistant, and chemically resistant. In such cases either or both the resin and filler content are varied and properties vary accordingly. Somewhat the same is true of other plastics; hence generalizations require many qualifications.

When any article is being designed for mass production it is essential that the designer knows approximately the characteristics of the material he intends to use. If a molding plastic is chosen, it is well to know also the kind of mold and method of

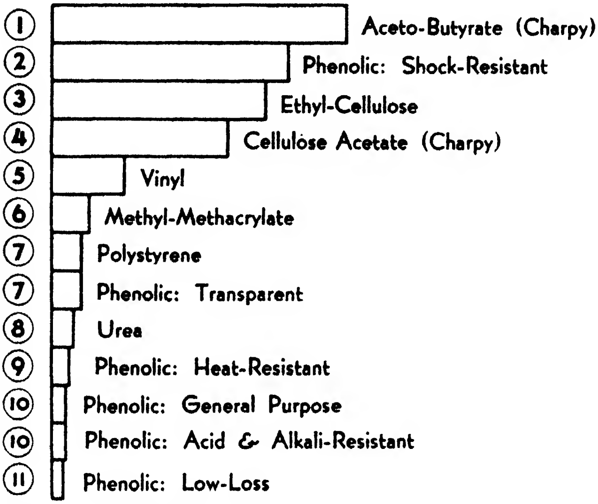

CHART A.—Toughness (impact strength) of molded plastics.

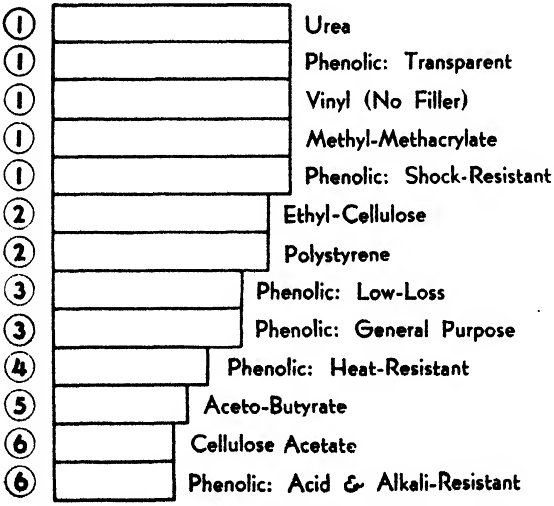

CHART B.—Flexural strength of molded plastics.

molding most suitable. The following material data are intended to help in selecting the proper plastic.

TABLE I.—PROPERTIES OF MOLDED PLASTICS

Properties	Phenol-formaldehyde compounds Molding				Vinyl chloride-acetate resins		Vinyl chloride and vinyl chloride-acetate resins (plasticized)	Vinylidene chloride resins	Cellulose compounds	
	No filler	Wood flour filler	Mineral filler	Macerated fabric filler	No filler	Filled			Ethyl cellulose	Cellulose acetate
										Sheet
Molding qualities	Fair	Excellent	Excellent	Good to fair	Good	Excellent	Fair	Good	Excellent	Excellent
Specific gravity	1.28	1.34–1.52	1.55–2.01	1.35–1.44	1.34–1.36	1.35–2.50	1 20–1.60	1.60–1.75	1.14	1.27–1.37
Weight per cu. in. (grams)	21.7	21.8–24.8	25.4–36.1	22.1–23.5	20.7–20.4	20.5–11.1	23.0–17.3	17.3–15.8	24.3	21.8–20.2
Tensile strength, psi	6,000–9,000	4,500–9,500	4,000–6,000	4,000–8,500	8,000–10,000	6,000–12,000	1,000–9,000	Up to 60,000	6,000–9.000	5,000–11,000
Compressive strength, psi	....	25,000–29,000	23,000–28,000	25,000–29,000	....	....	......	......	10,000–12,000	4,000–16,000
Flexural strength, psi	12,000–17,000	8,500–13,000	5,000–10,000	6,000–15.000	10.000–13,000	7,500–12,000	......	15,000–17,000	4,000–12,000	4,000–8,000
Impact strength, ft.-lb. per in. of notch (½ by ½-notched bar), Izod test	0.32–0.40	0.22–0.56	0.24–1.00	0.8–4.8	0.6–1.2	0.2–1.4	......	2.8 (unnotched)	0.6–1.8	1.6–4.0
Softening point, °F	None	None	None	None	140–150	140–158	......	200–325	210–265	140–230
Distortion under heat, °F	240–260	250–329	....	....	140–150	140–158	......	150–200	130–150	122–212
Tendency to cold flow	....	None	None	None	Slight	Slight	Slight	Slight	Slight	Slight
Water absorption, % gain	0.1–0.2	0.4–1.73	.045–0.6	.4–3.0	0.05–0.15	0 2–4.0	......	0.00	0.5–1.5	1.5–3.0
Effect of age	None	None	None	None	Strength unaffected	None	None	None	Slight	Slight
Effect of sunlight	Surface darkens slightly	Light	Shades	Discolor	Darkens	Discolors	Slight	Slight	Slight	Slight
Machining qualities	Fair	Fair	Fair to good		Good	Good	Good	Good	Good	Good

TABLE I.—PROPERTIES OF MOLDED PLASTICS.—(*Continued*)

Properties	Cellulose compounds		Urea formaldehyde compound alpha-cellulose filler	Urea melamine formaldehyde compound alpha-cellulose filler	Metha methacrylate resin		Styrene resin	Shellac compound	Cold molded	
	Cellulose acetate Molding	Cellulose acetate-butyrate			Cast	Molding			Non-refractory (organic)	Refractory (inorganic)
Molding qualities	Excellent	Excellent	Excellent	Excellent	Good	Excellent	Excellent	Good	Fair	Fair
Specific gravity	1.27-1 37	1.14-1 22	1 47-1.52	1 49	1.18	1.18-1.20	1.05-1.07	1.1-2.7	1 87-2.15	1 63-1.85
Weight per cu. in. (grams)	21.8-20 2	24.3-22.8	24 1-24.9	18 6	23.4	19.5	17.38	25.2-10.3	14.8-12.9	17-15
Tensile strength, psi	3,500-10,000	2,500-7,500	8,000-12,000	. . .	7,000-9,000	4,000-12,000	5,500-7,000	900-2,000		
Compressive strength, psi	7,000-27,000	7,500-22,300	25,000-35,000	....	11,000-13,000	10,000-15,000	11,500-13,500	10,000-17,000	6,000-15,000	16,000
Flexural strength, psi	3,700-16,000	2,800-13,000	8,000-14,000	. . .	14,000	9,000-12,000	6,500-19,000	......	3,700-9,300	1,400-4,700
Impact strength, ft.-lb. per in. of notch (½ by ½-in. notched bar), Izod test	0.7-4 2	0.8-5.5	0.30-0.36	0.28-0.32	3.4-3.6*	0.10-0.13	0.4-1.2	2.6-2.9	0.4	0.4
Softening point, °F	145-260	140-250	None	None	150-230	140-190	190-250	150		
Distortion under heat, °F	122-212	136-200	230-266	285	155	125-140	170-190			
Tendency to cold flow	Slight	Slight	Very low	Very low	Very slight	Slight	Slight	Slight		
Water absorption, % gain	1.0-2.8	0.8-2.0	0.25-0.35	0.2-0.6	0.04	0 3-0.5	0.00	....	0.6-7.5	0.5-2.6
Effect of age	Slight	Slight	Hardens slightly	Hardens slightly	Practically nil	Practically nil	Very slight	None		
Effect of sunlight	Slight	Slight	None	None	Very slight	Very slight	Yellows slightly	None		
Machining qualities	Good	Good	Fair	Fair	Excellent	Excellent	Fair to good	Poor to good	Poor	Poor

* Charpy.

The molding materials described are among the commonest used at the present time and, as a rule, only the general or most outstanding characteristics of each are given. The plastics are arranged in alphabetical order for ready reference. The data on physical properties given in Table I are based largely on information furnished by makers of the respective types of plastics covered. The order of merit of various plastics under several headings is given in Table II and relative values under some of the headings are given in bar charts A to G inclusive.[1]

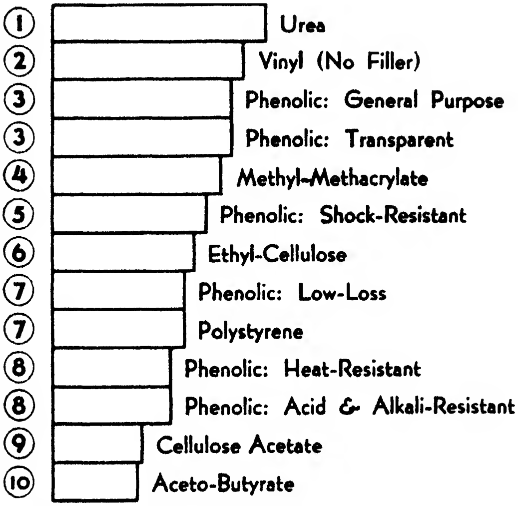

CHART C.—Tensile strength of molded plastics.

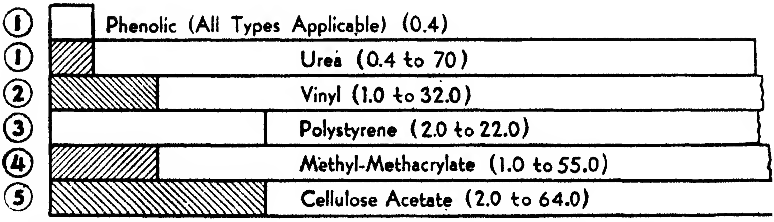

CHART D.—Cold flow in plastics = % decrease in height of ½-in. cube in 24 hr. under a load of 1,000 lb. at 120°F. Shaded portions represent minimums; unshaded portions maximums, depending upon formulation.

---

[1] Tables II, III, and IV and the charts A to G, based thereon, are copyrighted (1941) by and used by permission of the Bakelite Corporation, New York.

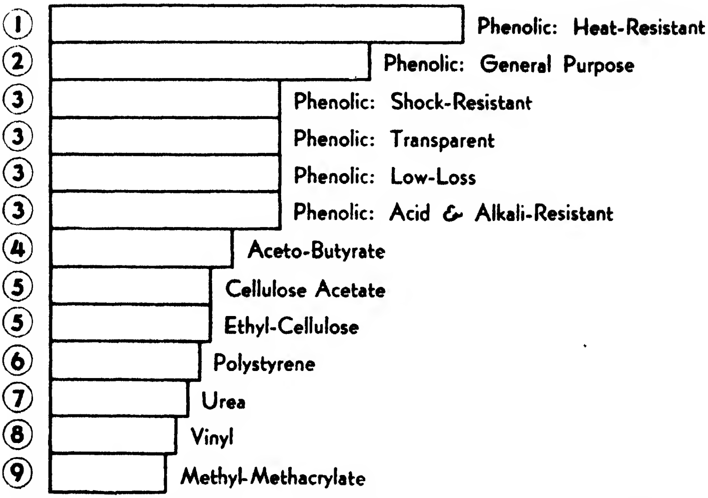

CHART E.—Heat resistance of molded plastics (continuous heat, highest temperature feasible). Heat resistance varies with formulation, especially in thermoplastics.

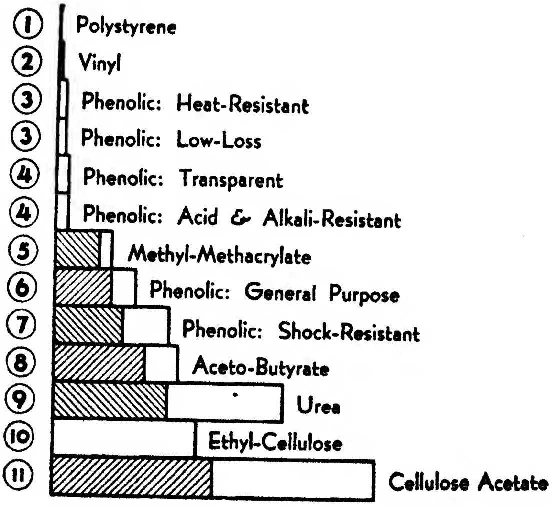

CHART F.—Water absorption of plastics, A.S.T.M. immersion test, 1 being lowest. Shaded portions show minimum, unshaded portions maximum over range of formulations tested. (Moisture absorption from air, as distinct from immersion, results in different values and often is—as affecting dielectric values, for example—of greater importance.—EDITOR.)

TABLE II.—THE RELATIVE ORDER OF MERIT* OF 13 TYPES OF PLASTICS UNDER EACH OF 19 DIFFERENT PROPERTIES†

Plastic material	Toughness (impact strength)	Flexural strength	Tensile strength	Color stability	Cold flow	Water resistance	Acid resistance	Caustic resistance	Solvent resistance	Dimensional change on aging‡	Heat resistance (continuous heat)	Flammability	Heat insulation	Specific gravity	Hardness§	Loss factor‖	Resistivity	Dielectric strength	Moldability around inserts
Phenolic: general purpose	10	3	3	7	1	6	3	4	1	4	2	3	2	8	5	10	7	4	2
Phenolic: low loss	11	3	7	7	1	3	4	4	1	2	3	1	7	12	3	4	3	3	2
Phenolic: heat resistant	9	4	8	7	1	3	4	4	1	1	1	1	7	13	2		8	8	2
Phenolic: acid and alkali resistant	10	6	8	7	1	4	2	3	1	5	3	2	2	5	4			7	3
Phenolic: shock resistant	2	1	5	7	1	7	4	5	1	6	3	4	3	10	5		9	8	1
Phenolic: transparent	7	1	3	7	1	4	3	3	1	5	3	2	2	6	4	7	5	6	3
Urea	8	1	1	1	2	9	4	4	1	7	7	5	5	11	1	9	4	2	4
Polystyrene	7	2	7	4	4	1	1	1	3	3	6	6	1	1	6	1	1	1	6
Cellulose acetate	4	6	9	3	8	11	4	6	3	9	5	6	4	7	9	8	6	5	5
Aceto-butyrate	1	5	10	3	6	8	4	4	3	8	4	6	6	4	8	3			5
Ethylcellulose	3	2	6	6	7	10	4	2	3	8	5	6	4	2	8	2	2	1	5
Methyl-methacrylate	6	1	4	2	5	5	2	2	3	8	9	6	2	3	7	5		2	6
Vinyl (no filler)	5	1	2	5	3	2	1	1	2	3	8	6	2	9	7	6	3	1	5

* The lower the mineral, the better is the order of merit under the respective heading.

† Copyright, 1941, by Bakelite Corporation, New York, N. Y.

‡ In the case of the acetate and the acrylic plastics rated 8 and 9, dimensional change depends in part on the type of plasticizer and on the formulation.

§ No. 1 hardest. In the case of 7, 8, and 9, hardness varies with formulation.

‖ See also Table III.

TABLE III.—RELATIVE LOSS FACTOR

From lowest loss to highest loss, assuming loss factor of polystyrene as unit for comparison

	60 cycles	1,000 cycles	1,000,000 cycles
1. Polystyrene	1	1	1
2. Ethylcellulose	38	38	38
3. Aceto-butyrate	68	68	68
4. Phenolic: low loss	172	88	44
5. Methyl-methacrylate	188	248	83
6. Vinyl	313	293	293
7. Phenolic: transparent	375	375	375
8. Cellulose acetate	300	450	375
9. Urea	625	350	350
10. Phenolic: general purpose	4,675	1,560	413

NOTE: Rating is arbitrary. Varying frequencies change relative losses.

Acrylic plastics, which go by the trade names of Acryloid, Crystalite, Lucite, and Plexiglas, have a clear resin base, are thermoplastic, and can be molded either by compression or by injection. They are available in a wide range of colors. Crystal clearness is their outstanding feature. Other properties include excellent stability, high resistance to moisture and to weathering, and, if so specified, little tendency to cold flow. Acrylic plastics

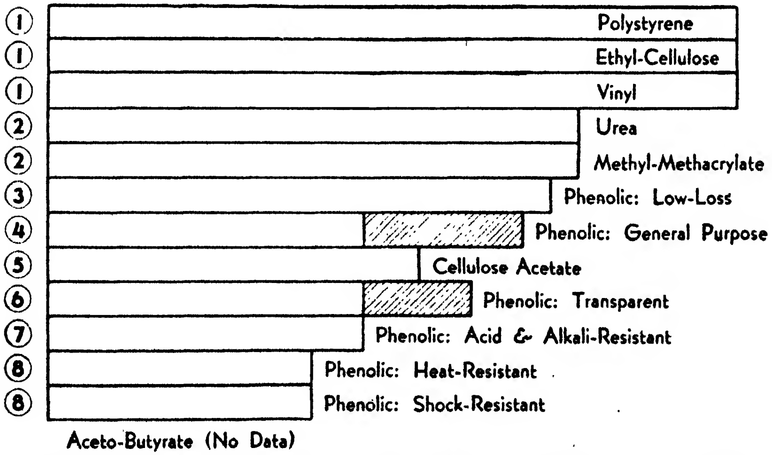

CHART G.—Dielectric strength of molded plastics (A.S.T.M. $\frac{1}{8}$ in., instantaneous). Shading represents normal variation ranges for different formulations.

are well rated under the following additional properties: flexural and tensile strength, colorfastness, water, acid, caustic and solvent resistance, dielectric strength. They also adapt themselves well to inserts. Typical applications include displays and decorative articles, brush backs, signs, clock and instrument dials, containers, cases, lenses, and the like.

TABLE IV.—RESISTIVITY

Rating from highest to lowest; lowest is expressed as unit 1
(All are good insulators for direct current)

1.	Polystyrene*	10^8
2.	Ethylcellulose*	10^5
3.	Vinyl*	10^4
3.	Phenolic: low loss	10^4
4.	Urea	2,000
5.	Phenolic: transparent	120
6.	Cellulose acetate	100
7.	Phenolic: general purpose	13
8.	Phenolic: heat resistant	2
9.	Phenolic: shock resistant	1

No data: aceto-butyrate and phenolic: acid and alkali resistant.

* Considering high resistivity of poorest is excellent, figures are fantastic for higher ones.

Cast phenolic resins, while not properly classed among molding plastics, are mentioned here for general information. They are known by the trade names of Bakelite Cast Resinoid, Catalin, Gemstone, Marblette, Opalon, Prystal. They are prepared as a sirup, and the casting process involves pouring this viscous material into lead, glass, or rubber molds, after which the material hardens under heat, requiring, generally, 48 hours or more at approximately 175°F. The cast material, when finished, has excellent eye appeal. Colors are unlimited and range from clear transparency to opacity, including many beautiful mottled effects. Castings[1] are often in the form of rods, tubes, or sheets, which are readily machined and polished. The plastic is nonflammable, and has high tensile and fair impact strength and good electrical insulating properties. Applications are chiefly of an ornamental nature and include buttons, handles, knobs, cases, costume jewelry, advertising signs, brush backs, displays, translucent panels, and the like.

---

[1] The term "castings" as here used is correct, as this type of plastic is cast rather than molded. It is not good practice, however, to refer to "castings" when the plastic is molded, as in that case the correct term for the part produced is "molding."—EDITOR.

Cellulose acetate, which is manufactured under the trade names of Bakelite Cellulose Acetate, Lumarith, Masuron, Fibestos, Nixonite, Plastacele, and Tenite I, is among the most widely used thermoplastic materials. It has good mechanical strength but it is subject to considerable cold flow, especially in the softer grades. It is procurable from clear transparency through any degree of translucency to opacity and in a wide range of colors. Cellulose acetate is hygroscopic but generally has good to fair acid, caustic, and solvent resistance, depending upon the strength and nature of the solution. Its general moldability is excellent and it can be molded around inserts without difficulty. It has high dielectric strength and good machining qualities. Acetate plastics are often subject to warpage in service and they become quite brittle at low temperatures, 0°F. or thereabouts. Typical applications include handles, knobs, escutcheons, bezels, lighting accessories and electrical-appliance parts, combs, costume jewelry, gunstocks, clock and watch crystals, and an array of novelties, among many other parts.

Cellulose acetate butyrate, which has the trade name of Tenite II, is quite similar to the general run of cellulose acetate except that it has much better resistance to weather and its water absorption is much lower. It also has greater impact strength and less tendency to cold-flow than cellulose acetate. Because of these differences, it finds additional applications in articles, such as signs and lenses, that are subjected to outdoor exposure, handles, trays, parts used in refrigerators, and toothbrush handles and parts that are subjected to considerable contact with water.

Cellulose nitrate, known by such trade names as Amerith, Celluloid, Nitron, Nixonoid, and Pyralin, is the oldest of synthetic plastics. This thermoplastic is not suitable for injection molding, partly because granules do not weld and comminuted forms are dangerous to handle and to store. Sheet and bar stock can be compression-molded. Hollow articles are made by using softened sheets in the mold and forcing steam, air, or liquid between them. The material is somewhat water resistant, yet is hygroscopic, that is, tends to absorb moisture, and so is not suitable for use in continuous contact with water. It is available in crystal-clear, translucent, and opaque forms in any color and in many beautiful mottled effects. It is tough, has excellent machining qualities, and finds some applications quite similar to those of cellulose acetate and butyrate. Flammability is its main drawback but, by use of special plasticizers, this property can be reduced considerably. Clear transparent forms become brittle and discolor under prolonged exposure to sunlight. Much sheet, rod, and tubing are worked by machining rather than by molding. Few custom molders work with cellulose nitrate.

Cold-molding compounds of the organic type are known by the following among other trade names: Aico, Cetec-Non-Refractory, Ebrok, Gummon, Okon, and Thermoplax. The inorganic makes include Aico 5, Alphide, Cetec-Refractory, Coldstone, and Hemit. These compounds can be further grouped in three classes depending upon the kind of binder used:

1. Bitumen, which has the lowest physical strength, is cheapest per pound but has the best molding properties.
2. Resin, with high tensile and compressive strength but lower heat resistance than 1.
3. Cement, having rather low tensile strength, highest compressive strength, and, being refractory, the highest heat resistance and good arc resistance.

All have relatively low dielectric strength but good resistance to acids and alkalies unless concentrated. Moisture absorption of some forms is high, tending to impair dielectric properties. Battery boxes, terminal and switch blocks, heater plugs, and handles subjected to considerable heat are among the outstanding cold-molded articles. All, except certain refractory forms, are dark in color and all are opaque. Rather liberal dimensional tolerances are required.

Ethylcellulose, known by trade names of Dow Ethocel and Hercules Ethylcellulose, is a thermoplastic material having good impact, flexural, and tensile strength. Its hygroscopic qualities, tendency to dimensional change upon aging, flammability, and hardness compare with that of cellulose acetate and of cellulose acetate butyrate. It has a complete color range and is inert to alkalis of all strengths and to dilute acids. Its specific gravity is very low (1.14) and it possesses good dielectric properties. It is readily molded by either injection or compression methods. Molded products from this material are quite similar to the acetates. Ethylcellulose plastics form an excellent coating over wires. Strips of extruded ethylcellulose are used in the manufacture of woven furniture. Ethylcellulose, unlike cellulose acetate, does not become brittle at low temperature.

Melamine.—Closely related to ureas is the resin known as "melamine," which has the trade name of Melamac. This material is of the thermosetting type. It is highly inert and among its outstanding properties is its resistance to hot water, organic solvents, weak acids, and alkalies. It is odorless and tasteless, colorless, and lightfast.

Phenolic plastics are perhaps the most widely used of all molding materials, except rubber, and the following trade names of this type of material are well known to molders and customers alike: Bakelite, Durez, Durite, Indur, Makalot, Resinox, Textolite. Phenolic resins from which plastics are made are commonly mixed with about equal parts of fillers such as wood flour, asbestos, mica, cotton flock, or macerated fabric, which strengthen the molded plastic and impart to it other favorable properties. These resins are readily molded under heat and pressure, during which they undergo an irreversible chemical change. As a result, they become permanently hard and cannot be softened again even by subsequent heating. They also become insoluble. Phenolic plastics come in a variety of colors but these are not generally colorfast; black, brown, and red are among the most stable. Light colors tend to darken and some others fade more or less rapidly if exposed to sunlight (or other light containing ultraviolet radiation) or to moisture, or both, and are not commonly recommended (see Table II under Color Stability), but dark colors render good service for most indoor applications.

Besides the above properties, phenolic plastics have many desirable characteristics such as: fair to high strength (including high impact strength in some forms only); hardness; good moisture, acid, and alkali resistance; good to excellent dielectric properties; machinability; low tendency to cold flaw; fairly high heat resistance; and good buffing qualities. Except for certain cold-molded plastics, the phenolic plastics are lowest in cost per pound among plastics now in common use. Not all the abovementioned properties are common to all grades, but generally a combination of most of them can be secured in one or more types, hence desired specifications usually can be met.

Styrene plastics are known by the trade names Bakelite, Polystyrene, Lustron, and Styron. This resin is thermoplastic, has a high luster, and is light in weight. It ranges from clear transparency to opacity and is available in a wide choice of colors. It has excellent resistance to cold flow, except at elevated temperatures, has the lowest water absorption of any plastic, and is inert to acids as well as alkalies. It is not soluble in alcohol but is soluble in aromatic and chlorinated hydrocarbons. It has ability to carry light (by internal reflection) even around corners (as do the acrylic resins), and thus can be used where edge lighting is desirable. Typical applications are generally the same as for acetates or butyrates and its nonhygroscopic qualities give it additional uses. Because of unusually low electrical losses, styrene plastics are well suited for high-frequency applications. They are well suited also for name plates and handles, doors, and bin ends used inside of refrigerators. In these as well as other applications, metal inserts molded into the material should be avoided, as the material surrounding the inserts is apt to crack. Unlike most thermoplastics, the styrene type contain no plasticizer and this makes for dimensional stability.

Rubber.—The molding of rubber as referred to here concerns chiefly the hard type. The molding process is comparatively slow, the cycles varying from a minimum of approximately 10 to 20 min. up to several hours. One outstanding advantage is that undercuts of large proportions can be had in soft-molded rubber articles. Various pigments added to the molding mixture give a variety of colors, although the standard colors are chiefly black, red, or green, or are mottled. The properties of the various grades vary considerably and the price varies accordingly. Rubber products are generally impervious to acids and dielectric properties are good. Hard-rubber moldings include such items as storage-battery cases and chemically resistant fittings. Rubber moldings have very low water absorption but soften and swell when in contact with oils, are inflammable, and are subject to attack by ultraviolet light.

Shellac is a thermoplastic resin and is known by such trade names as Compo-site, Harvite, and Lacanite. It can be molded by either injection or compression methods. It has excellent dielectric properties coupled with oil resistance and is extensively used for insulators, both large and small. Shellac also has some properties desired in phonograph records, for which it is much used. Although thermoplastic, molded articles can be made to withstand temperatures above 212°F.

Synthetic rubbers or rubberlike plastics, now available under such names as Neoprene, Koroseal, Thiokol, and others, are becoming available in increasing quantities and many varieties. In general, they have properties similar to rubber, and most of them can be vulcanized. Most of these materials, unlike natural rubber, are not affected by contact with mineral lubricants, gasoline, and other petroleum products. Molding is done in about the same way as for rubber, as a rule, but applications are chiefly for uses in which natural rubber would be unsuited or would be subject to rapid deterioration.

Ureas.—Urea resins are commercially known as Bakelite Urea, Beetle, and Plaskon. They are thermosetting, usually translucent, and come in a great variety of colors (especially pastel tints) and mottled effects. Colors are quite lightfast. Typical applications include closures, radio cabinets, clock cases, handles, lamp shades, and electrical devices. The molded article is light in weight and, though fairly water resistant, is not recommended for use in continuous contact with water. Urea moldings are quite brittle. In the lighter shades the material is translucent, and, when thin wall sections are used, care must be exercised in the choice of design and location of ribs so as not to detract from the desired appearance. Metal inserts, molded in place, may be used but are not generally recommended because the material surrounding the inserts is apt to crack.

Vinyl Resins.—Vinylite is the trade name of a molding material that has been used for several years in compression molding but recently has been introduced to the trade for injection molding. It is thermoplastic and available in almost any colors, the material ranging from clear transparency to opacity. Water resistance is high and dimensional stability excellent. Phonograph records are among important molded applications.

Aids in General Design of Molded Parts.—Many problems have to be solved in the design of most products and those molded from plastics are not an exception. But there are many general rules to aid the designer in making his product practical for quantity production.

It is always helpful, when designing a product to be molded, to visualize the part in the mold and to consider what will be required to eject it therefrom. This will make apparent the necessity of adequate draft and will help to determine whether it is better to have the part cling to the force or to the cavity and where knockout pins should be provided. It will also reveal the logical parting of the mold and where the flash will occur. Such study helps to indicate how costs can be lowered and how mold costs can be minimized without using a mold that is cheap in the sense of being poorly built, for such a mold is seldom a good investment. The part should be so designed that the mold cost is at a minimum without sacrifice of quality or of efficiency in operation.

Improvements in molding technique and in plastic molding materials have been so rapid and so frequent that the average designer is not usually too well posted thereon. For this and other reasons, it is well for him to consult the engineering staff of a qualified custom molder before his design is too far advanced to permit of desirable changes. The responsible molder is capable and willing to aid in adapting designs to the most economical and satisfactory molding practice. As he works with most, if not with all, of the established plastic materials and knows their properties, his aid in selecting the best material is invaluable. Since the selection of molding material has a bearing on mold design and also on the cost of the finished product, it is well to have a definite knowledge of what material is to be used before going far with the design of any parts to be molded from plastic.

It is often expedient to have a qualified commercial designer or stylist either design or offer suggestions on those features which affect the appearance of the product. Such designers generally are also prepared to furnish models of the design and these models often save their cost many times over. Among the advantages that a model yields is that it can be viewed from an infinite number of angles, whereas the average drawing generally limits the views to three or four. A model also makes it possible to secure constructive criticism from those who cannot read drawings but whose comments may well prove highly valuable.

General Rules for Design.—It is of course quite impossible to lay down any unvarying set of rules to cover all features of the design of parts for plastic molding. Some general rules are given below, but it must be understood that they are not applicable in all cases. They serve, rather, as a guide to what should be aimed at, especially when the purpose is to produce at minimum cost, than as inflexible indications of what can and cannot be done.

The reasons on which the rules are based are explained in subsequent sections, but the rules sometimes have to be violated because of other more important considerations. Nevertheless, the rules are formulated with a view to reducing both the mold cost and the time of production, and, where it is possible to follow them and still meet other requirements, costs are likely to be lowered and production speeded. Although some of the rules may appear self-evident, checks of actual designs will show that they are sometimes overlooked with consequent and often needless increase in cost.

The rules may well be reviewed before designing a part to be molded from plastic and, when the design is nearing completion, if it is checked against each rule successively, it is quite likely that they will suggest desirable changes that, if followed, will result in economies, often without interfering with other requirements that must be met.

It should be understood that the rules are not all-inclusive and that the designer should use reasonable judgment in their application. Where there is question as to their applicability to specific designs or as to the probable effect upon cost that will result if the rule be violated, the designer may well discuss alternatives with the engineer of some molding company, who will know what the effect of the alternative on cost is likely to be.

Rule 1. Design for the minimum over-all size of piece consistent with other requirements and avoid more parts than economy in production dictates.

Rule 2. Aim for uniformity in section thickness and keep sections as thin as strength and other considerations permit.

Rule 3. Avoid deep draws when shallower ones meet requirements.

Rule 4. Aim for simplicity in general design and for shapes that tend to minimize the cost of molds.

Rule 5. Design the piece so that the mold parting will come where the flash is readily removed and where the mark left is not noticeable or can easily be rendered imperceptible.

Rule 6. Choose the material that gives lowest over-all cost consistent with other requirements.

Rule 7. Design for the simplest and most rapid molding consistent with other requirements.

Rule 8. Avoid shapes that require molds having split sections or other loose pieces when simpler molds can be made to meet requirements.

Rule 9. Allow plenty of draft to facilitate removal of the molding from the mold.

Rule 10. Provide for ample fillets at inside corners.

Rule 11. Avoid large flat areas, especially where crowned or curved surfaces, beads, stepped, or other broken surfaces improve appearance without undue increase in cost.

Rule 12. Avoid the use of inserts molded in place unless essential and, where they are required, minimize their number, consistent with other requirements.

Rule 13. When inserts are required, see that they are not fragile or easily displaced and that there is sufficient plastic around them to avoid cracking of the plastic subsequent to molding.

Rule 14. Avoid specifying limits closer than are readily held or closer than are required in mating parts.

Rule 15. Design the piece to facilitate ready removal from the mold without distortion and so that pushout pin marks, which are unsightly, are hidden in the finished product.

Rule 16. Make use of integral projections or recesses where they tend to facilitate assembly and/or fastening without undue increase in cost.

Rule 17. Design for best appearance consistent with cost limitations.

Rule 18. When lettering is required, specify raised letters; use debossed letters in the piece only when required for wiping in or for reasons that justify the added cost. This applies when the cavities are sunk by machining. If they are produced by hobbing, debossed letters should be specified.

Rule 19. Locate lettering on mold surfaces that are accessible and preferably on surfaces parallel to the mold parting.

Rule 20. Always use inserts for threaded holes if considerable stress is to be imposed on the threads or if they are subject to considerable wear.

Rule 21. Avoid long cored holes (especially side holes), particularly if adequate support cannot be provided for the pin that forms the hole.

Rule 22. Always have inserts as sturdy as expedient and avoid specifying long inserts or slender inserts supported only on the ends.

Rule 23. Avoid lugs or projecting inserts near edges or corners.

Rule 24. Do not specify oblique or irregular holes if they can be avoided.

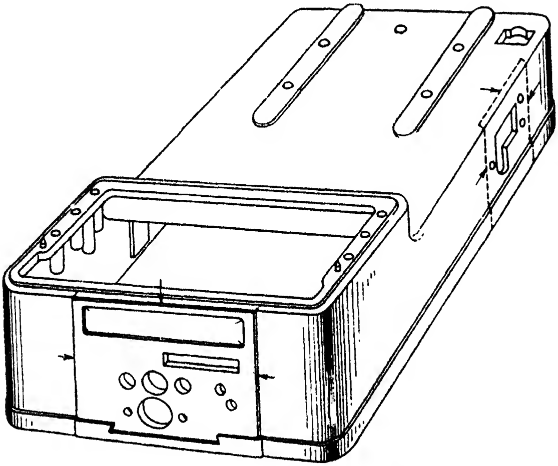

FIG. 5.—Housing for which two loose pieces are required in the mold, to make a through hole at the side, and several other through holes as well as a panel at one end. Flash lines occur where the edges of the loose sections join the mold cavity, as indicated by arrows.

Rule 25. Avoid the use of inserts hexagonal or irregularly shaped in those portions which project from the molded part.

Rule 26. Avoid inserts that project from the molded piece at both ends if the ends must telescope into both halves of the mold.

Rule 27. Design the molding, if possible, so that the mold can be parted in one plane rather than with an irregular parting.

Effect of Shapes on Production Costs.—Limitations in the shapes that a molded part may assume are not numerous. It is better, however, to avoid undercuts, either internally or externally, that will restrict or prevent the piece from being readily separated from the mold. This is especially true of restrictions inside of the piece rather than on the outside. External undercuts, if essential, can be produced by using loose sections to form part of the cavity, but these always complicate the mold and generally result in lines or marks where flash forms at joints between the loose piece and the mold proper (Fig. 5). Such flash often necessitates extra finishing operations, as does also the flash around a side core, as indicated by arrows in Fig. 5.

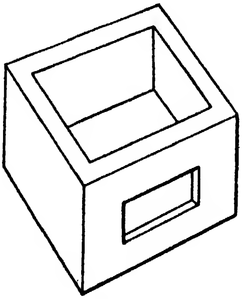

FIG. 6.

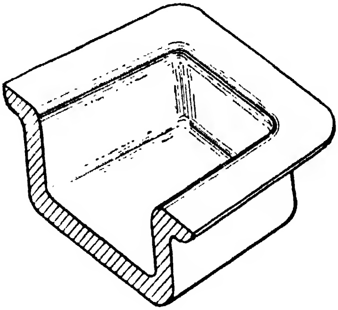

FIG. 7.

FIG. 6.—Sketch of molding with external undercut requiring in the mold a loose piece or a side core that does not go through the side wall. Flash appears around the opening made by the side core if, as in this instance, it is the kind that is pulled out sideways before the piece is ejected from mold cavity. If the side core is part of a loose piece that adheres to the molded part until this is out of the cavity, the flash appears around outline of the loose part.

FIG. 7.—Sketch of part of a molding showing where sharp corners should be avoided and where used to advantage. The upper edge, which is in the parting plane in this case, should have sharp corners, except as it may be rounded by a file or other finning tool. All other corners, both inside and outside, should have radii as large as feasible.

Sharp external corners and edges should be avoided, as a rule (*except at parting lines*), as they increase the cost of the mold and tend to weaken the mold by inviting fractures (Fig. 7). Sharp edges at other points in the mold than the parting tend to restrict the flow of the plastic and may cause weak weld lines in the finished product.

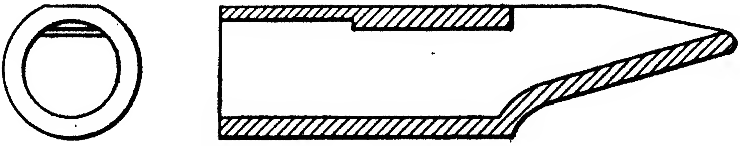

FIG. 8.—In this molding, an abrupt change in section at top resulted in unequal shrinkage and in sink marks appearing in the outer surface of the thickened wall, whereas this surface was required to be as flat as possible. By making the change in section gradual the trouble was overcome.

Abrupt changes in wall thickness (Fig. 8) should be avoided because they are apt to result in unsightly surfaces, owing to unequal shrinkage of thick and thin sections and unequal curing in the case of thermosetting plastics. Sink marks, that is, a tendency to cause shallow hollows in surfaces or even cracked moldings may result from abrupt changes in section thickness. A thin head on a thick stem is likely to show a sink mark on the face of the head, as indicated in Fig. 9. This can be avoided by making the head thickness about equal to the stem diameter, or, if the head surface is slightly dished, the sink mark may not be noticed.

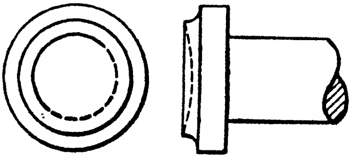

FIG. 9.—Dotted line shows the approximate outline of the sink mark that occurred when a thin head was molded with a thick stem. Increasing the head thickness helps eliminate the sink mark.

Designs which are streamlined have such a relation between their length, width, and depth that they are generally the most economical to mold. Excessive depth, in relation to areas or cross section, presents difficulties, especially if the walls are very thin. The two-piece housing for a bicycle light shown in Fig. 10 and the radio cabinet illustrated in Fig. 11 are good examples of

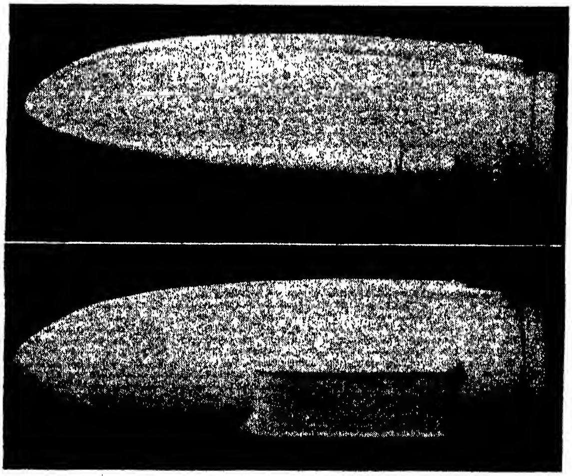

FIG. 10.—Two halves of a bicycle lamp that is effectively streamlined and readily molded.

streamlined moldings well proportioned in relation to depth and section thickness. Details of the radio cabinet are given also in the drawing (Fig. 21).

Location of Parting and Effect on Design and Appearance.—It is generally desirable that the piece be so designed that the inevitable parting line comes in such position that the removal of attendant flash is facilitated. If this line lies in a single plane, as in Fig. 7, it makes the mold cost less and flash removal is simplified. An irregular parting line, although sometimes required, as in Fig. 12, is always relatively expensive not only in original mold cost but also in the finning operation.

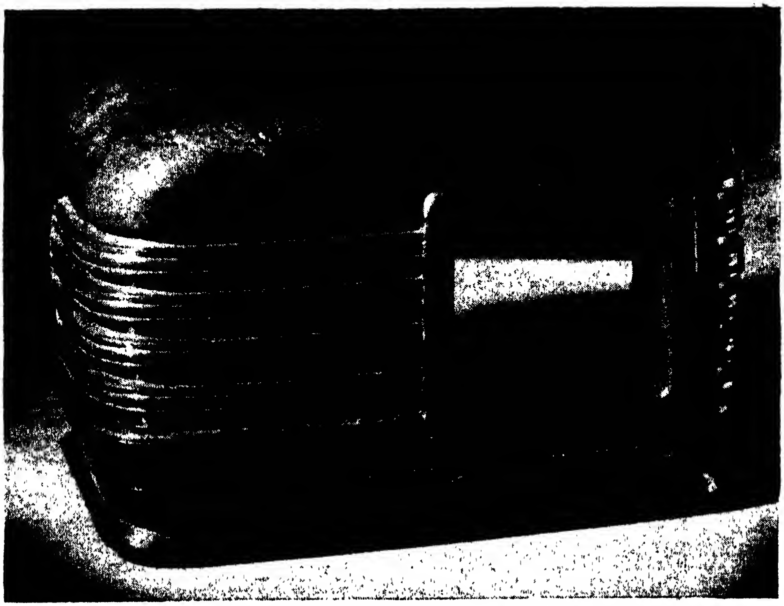

FIG. 11.—Radio cabinet (shown also in drawing, Fig. 21) has well-rounded corners and surfaces most of which are crowned, as well as a neat design of louvers all making for good appearance. Large radii make the cabinet easier to mold.

The parting line usually comes at the maximum diameter of the molding. If the piece is convex at the parting, it is often good practice, if permissible, to add a bead at the parting, as in Fig. 13. The flash is then readily accessible and is easily removed without marring the rest of the surface. A slight misalignment between the force and cavity will then not be noticeable. If the finished part is circular and can have a groove instead of a bead, as in Fig. 14, this too is good practice, as a groove is easily machined on a finning lathe. Subsequent filling of the groove with a contrasting color of paint often makes for pleasing appearance.

In the average commercial mold, the force and cavity are not always concentric or in perfect alignment, especially after the mold is worn. Some allowance for this should be made when designing the part. Wherever possible, it is better to avoid a design that brings the parting line in a place such as to necessitate close alignment between force and cavity (see Fig. 15).

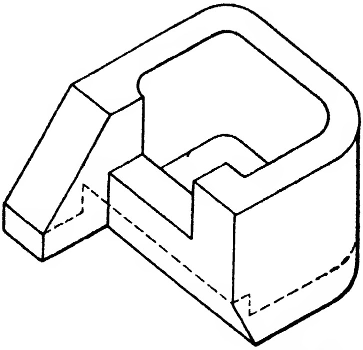

Fig. 12.—Sketch of a molding having an irregular parting. The broken line shows where the mold parts and indicates where the flash has to be removed.

Desirability of Minimum Weight.—Good design involves the use of a minimum of material, the latter being distributed so as to ensure sufficient strength at all points. Strength can be assured by selecting the proper material, by providing sections of adequate thickness, by the use of well-designed and properly located metal inserts, if they are essential, and by addition of ribs or bosses at places of greatest stress. Economy in production calls for relatively light weight both because less material is

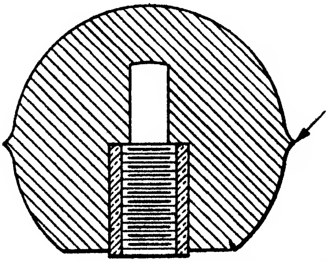

Fig. 13.—Ball knob having a bead molded at the parting. This makes flash easy to remove without leaving an unsightly mark.

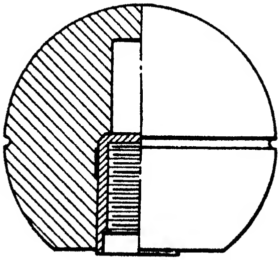

Fig. 14.—Ball knob in which flash is removed by simply turning a groove where the flash comes.

required and because molding time is thereby minimized. The use of ribs often results in saving weight as the *average* section

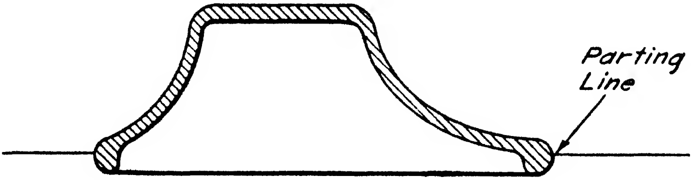

FIG. 15.—In a molding such as this, the parting line comes at a prominent point but is easily removed provided that the force and cavity are in perfect alignment. When mold wear occurs, however, the lack of alignment shows prominently and is likely to result in excessive time for finishing.

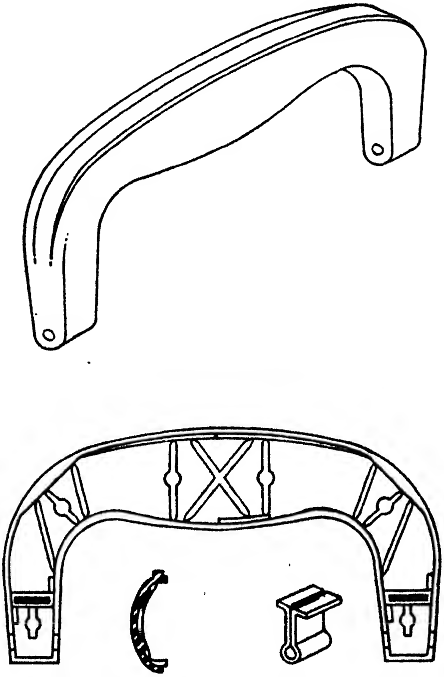

FIG. 16.—Luggage handles (molded hollow in two halves subsequently cemented together) that are good examples of the use of thin sections with suitable ribs and bosses to minimize weight. Strength is added by the ribs and by using loops of sheet metal at the pin eyes. Ears on the metal fit into recesses between ribs or bosses, the loops being added at assembly, not molded in place.

thickness can then be minimized, as a rule. The luggage handles shown in Fig. 16 are materially strengthened by the use of ribs and bosses as well as by the use of loop-shape stamped metal inserts (shown separately), which help to take the stress at the pin where the handles are attached to the bag. Packing and shipping expense is reduced when size and weight are kept at a minimum and this also promotes economy. Plastics are often chosen in place of other materials because weight is thereby lowered.

Desirability of Uniform Section Thickness.—Uniform wall thickness results in maximum molding efficiency because it enables the molder to use the most advantageous combination of heat, pressure, and curing time. Adjacent thin and thick sections involve compromises, especially with thermosetting plastics, because thin sections cure rapidly and may be overcured before thick ones are cured sufficiently. After the molding has been ejected from the mold, there is, in addition, uneven shrinkage to consider. This often results in surface imperfections such as sinking in (sink marks) at the heavy sections, warpage, brittleness, and, in lighter colored materials, slight variance in color between heavier and lighter sections.

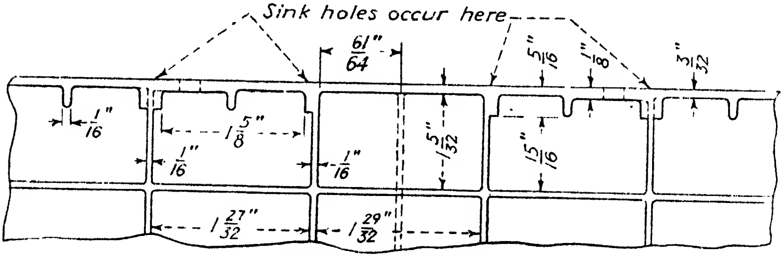

FIG. 17.—Portion of an injection molding showing where sink marks occur opposite heavy ribs on the outside of a surface intended to be perfectly flat. The marks result from unequal shrinkage between the thin walls and the thick ribs. Had the latter been no thicker than the walls and fillets used without a considerable increase in thickness at the junction (as at other points) sink marks would have been substantially avoided.

When light and heavy sections are required, it is best to use fillets as large as possible and/or to vary the thickness as gradually as conditions permit. Liberal fillets also strengthen both the mold and the molded part and generally facilitate the flow of the plastic material.

Need for Simplifying Mold Design.—Sometimes a part looks simple enough, but, if the part is visualized in the mold, difficulties otherwise overlooked are revealed. It may then be expedient to consider some redesigning that will simplify the mold as well as the molding operation.

Parts having re-entrant curves or undercuts such as to prevent ready withdrawal from the mold cavity require that the cavity block be split (as for the electric-iron handle, Fig. 18) or that one or more loose pieces be used (Figs. 5 and 6). This generally increases mold cost, because extra parts are required. The operation cycle is also lengthened as one or more parts forming cavity walls have to be removed to release the molded piece. The loose pieces become cooled when out of contact with mold walls, and additional heat and time are required to restore the loose pieces to desired molding temperature.

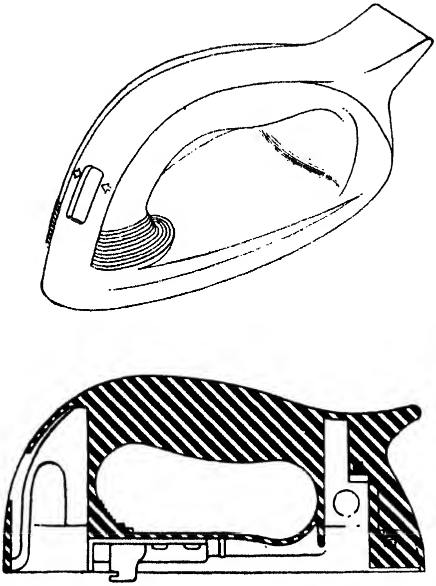

FIG. 18.—Handle for an electric iron that makes it necessary to employ a mold having split-cavity blocks. The heavy section for the handle proper necessitates a long curve but cannot be avoided unless the handle is made in two separate moldings.

Occasionally it is possible to have side holes or undercuts in a molded part without resorting to split cavity blocks. These are made possible by side cores that are withdrawn mechanically before the mold opens, as for the moldings shown in Fig. 6 and in the telephone mouthpiece, Fig. 19. Figure 20 shows a mold and molding requiring a side core and gives some idea as to the extra cost involved in providing side cores and the mechanism to operate them. If three-way (or side ram) presses are available, one whole side of the mold can be withdrawn before the other parts of the mold are opened (see Fig. 21). Split cavities, side cores, and other mechanical means for producing undercut moldings are entirely feasible and are in general use. They are, however, relatively expensive to build and slower to operate and

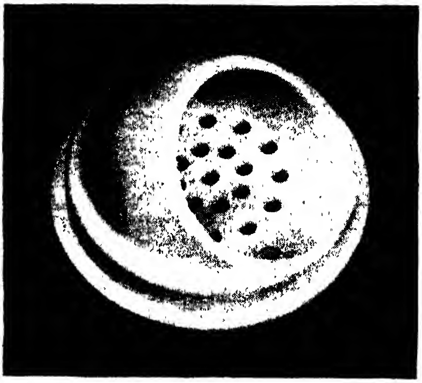

FIG. 19.—Telephone mouthpiece. It is necessary to use a side core, which is withdrawn before the molding can be ejected from the mold.

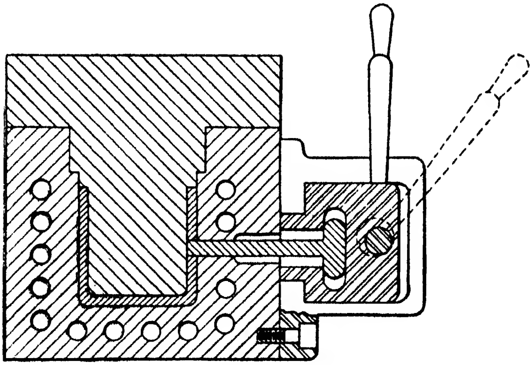

FIG. 20.—Sketch of a mold and molding in which a side core is required to form a hole or holes in one side wall. The core has to be withdrawn, of course, before the molding can be ejected and must be locked in place securely before the next molding is made. An eccentric on a lever is used in this case to actuate and to lock the core, and all the mechanism to the right of the cavity block, as well as the core itself, and the extra machining on the cavity block greatly increase the cost of the mold as a whole.

involve greater maintenance expense, and the finished molding requires that the parting lines at mold joints (unless allowed to show) be removed by a finishing operation.

If side holes or openings are required, it is possible to mold these without side cores (which are mechanically withdrawn) and without resorting to split cavities, provided that the wall slopes or that part of it is offset sufficiently to cut off the material as the force telescopes into the cavity (see Figs. 22 and 23).

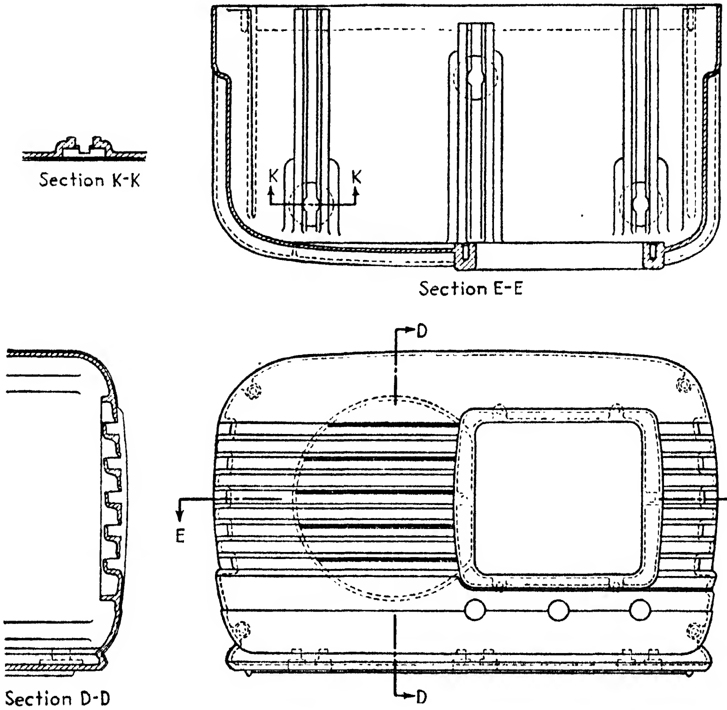

Fig. 21.—Drawing of radio cabinet (also shown in Fig. 11) having an undercut on the outside of the base that could be formed in a three-way press or by using a loose piece in the mold to form the bottom recesses or undercuts.

Drafts Required and Factors Affecting Draws.—Before draft is specified it should be determined definitely whether or not it is desirable to have the molded piece cling to the force or to the cavity when the mold opens. This is determined, generally, by the type of ejection and where it is permissible to have the ejection or knockout pins leave their marks. If it is desired that the molding cling to the force, as for the molding in Fig. 24, the draft should be shown on the outside (cavity side) of the piece, and, if the part is to cling to the cavity, as in the molding in Fig. 25, the draft should then be on the force side. It is generally not necessary to have draft on both inside and outside of a molded piece. Exceptions to this are extremely deep cavities, where it is necessary to strip the part off the force.

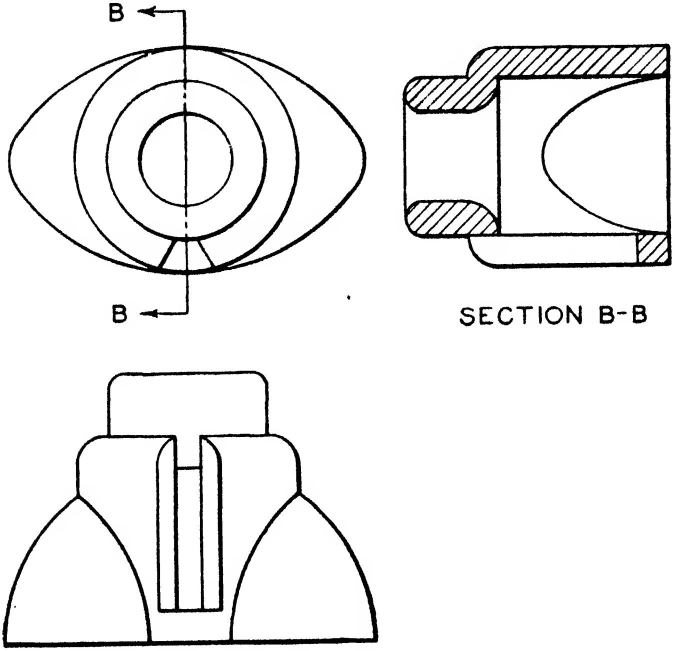

Fig. 22.—Molding with offset wall. Opening is formed in the side wall by a projection in the mold cavity. The force slides against the inner face of the projection to cut off the material and form the hole but leaves a thin flash at the inner face of the hole. No separate side core is required.

When the mold opens and the part clings to the force, the molding upon exposure to air begins to shrink and sometimes clings so tightly to the force that the molded part is distorted or even cracked when stripped. On deep parts it is often necessary to have draft on both inside and outside in order to maintain a fairly uniform wall thickness, as in Fig. 26. The exact amount of draft varies greatly with different materials and depths of draw but generally ranges between ¼ to ½ deg. *minimum, on a side,* which is ample in most cases.

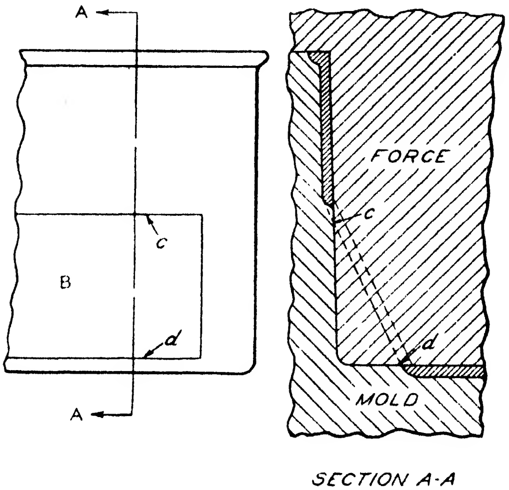

FIG. 23.—Sketch of molding in which the opening *B*, extending from line *c* to line *d* in the inclined wall, is formed by the force, as shown in the section *AA* through the molding and the mold in which it is formed. The force cuts through the wall of the molding forming the hole without the use of a separate side core.

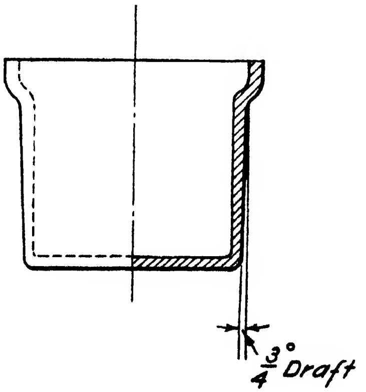

FIG. 24.—This cup, molded of cellulose acetate, has negligible draft on the inside because, for ejection purposes, it is desirable that the part slips freely out of the mold cavity and clings to the force. The part is later stripped off the force, leaving no pushout-pin marks that are visible from the outside.

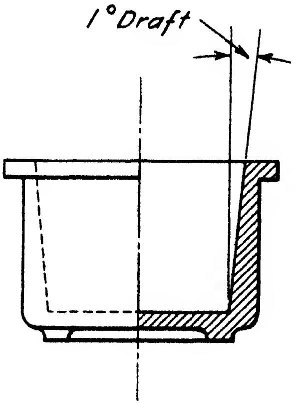

FIG. 25.—Sketch of a typical molding in which draft is desired on the inside only. When the mold opens, the force is freely drawn out of the molded part, the latter remaining in the cavity until it is ejected by one or more pushout pins working through the bottom of the cavity.

The maximum allowable depth of draw (distance which the force must move to clear the molding) also varies with many conditions, but the deeper the draw in proportion to force diameter and the smaller the draft, the more difficult the molding operation becomes. Parts, similar to the average drinking glass, that have a fairly uniform wall thickness and considerable draft, both inside and outside, and that are free from restrictions to the flow of material offer little difficulty in molding.

Fillets and Radii.—Generally, fillets and radii are desirable partly because they offer less restriction to the flow of the plastic and tend to strengthen the molded part. They should be so used, however, that they do not materially increase the wall thickness (see Figs. 27 and 28). As a rule, radii should appear both on the inside of a part and on the corresponding outside surface, so as to give a wall as nearly uniform thickness as practical, but, for reasons already explained, it is often better to avoid fillets at the mold parting. Fillets and rounded edges generally improve the appearance of the part, besides making exposed corners and edges less vulnerable to chipping. In general, square corners at mold partings can be broken, that is, slightly beveled or rounded, by the file or other tool used to remove fins and without a significant increase in cost. This makes the edge less likely to be chipped in service.

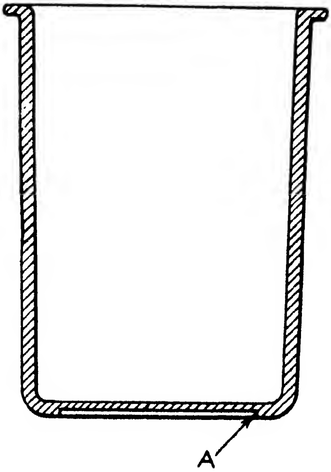

FIG. 26.—Sketch of a typical beaker that has draft on both inside and outside. Generally, no pushout-pin marks are tolerated on the inside of such moldings. In this case a slight and shallow undercut sometimes is placed at a point such as *A* to cause the molding to stick in cavity. When the mold is opened, the part is ejected from the bottom, being stripped off the shallow undercut.

Where a rib or boss joins a wall having an exposed surface, there should be no undue thickening of the molding, as sink marks are then likely to appear and to result in unsightly appearance. Figure 28 shows good and bad design at such points.

Shapes of Surfaces.—Large flat surfaces should be avoided in designing moldings, as it is practically impossible to produce a molded part in which a large surface is truly flat. Moreover, a slight deviation from true flatness in a surface is readily detected by the eye, and this tends to make any irregularity unduly prominent. A slight crown or some other expedient to avoid flatness usually enhances the appearance of the part and may stiffen it sufficiently to avoid noticeable warpage.

Stippling can often be used to advantage, but of course it must be placed in such a position that it does not interfere with withdrawing the part from the mold. Stippling tends to hide such surface imperfections as weld lines, orange-peel effect, and the like. Surfaces that are crowned or curved, even slightly, result in high lights that catch the eye and tend to prevent minor surface defects from being noticed. Crowning also results, as a rule, in greater strength than for a flat surface. Beads, recessed lines, and stepped effects are also used advantageously to relieve surfaces otherwise flat and uninteresting. Naturally, the curve or other expedient used to improve appearance should be such that it does not increase mold cost unduly or interfere with withdrawal of the molding from the mold. Simple curves are often less expensive to produce than compound curves. The radio cabinet shown in Figs. 11 and 21 illustrates the effective use of curved surfaces as well as of surfaces that are made attractive by the use of ribs or beads, some of which form louvers, though not without some addition to mold cost.

Inserts and How They Are Used.—Inserts, when properly designed and located, are often invaluable in moldings. Their purpose is generally to take stresses or to avoid wear that ordinarily is too great for the plastic part itself or to provide electrical conductors. Steel and brass are the most commonly used among the metal inserts. Brass is preferable, especially where great length is required, because its coefficient of expansion more nearly approaches that of the average plastic material; hence cracking with changes in temperature is less likely to occur. It is sometimes essential and always desirable so to locate inserts that the axis of the protruding portion is at right angles to the mold parting, as the insert must clear the mold when the molding is removed.

Inserts that are to be molded in place should be designed with coarse diamond knurls, undercuts, holes, or similar irregularities of the surfaces to ensure good mechanical anchorage in the plastic. They should be designed so that they can be securely held in the mold without bending and without shifting their location during the molding cycle. To accomplish this sometimes calls for ingenious designing but is well worth the effort, as an insert that does not stay in place is a source of much trouble and expense.

Inserts generally and preferably have those parts which protrude from the molding and which extend into or are supported by the mold circular in section, that is, usually, cylindrical in shape. Often these parts have a male or female thread. The diameters of inserts, both inside and outside, are generally quite easily held to close tolerances and such tolerances should be so specified on the print. Plus or minus 0.001 in. or less should be maintained so that the insert will fit either into a hole or over a pin by which it is to be positioned. Inserts that are not held to proper sizes either will not fit into or over the part for which they are designed, or else they will permit plastic material to flow beyond the point desired. Female threads of inserts should always be reamed or redrilled after the tapping operation to ensure close tolerances of the minor diameter. All inserts should be free from oil and chips. Figures 29 to 35 show inserts for molding in place and how they should and should not be used. Naturally molded-in inserts must be so placed that they do not interfere with withdrawal of the molding from the mold.

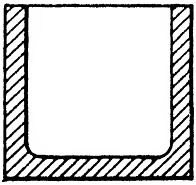

FIG. 27.—If the outside corners of part have to be square, the inside radii should not be so large that the wall section becomes proportionately heavy.

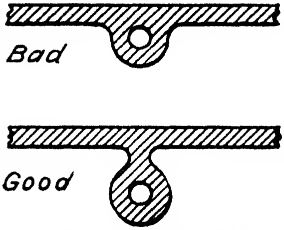

FIG. 28.—Bosses for fastenings, if made as in upper sketch, are likely to result in unsightly sink marks on the opposite face or in color variations if the plastic is light in color. This can be avoided by forming a neck no thicker than the wall to join the boss to the wall, as in lower sketch.

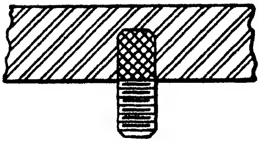

Fig. 29.—It is best to avoid the use of inserts having male threads and no shoulder, as plastic is sure to flow into the thread.

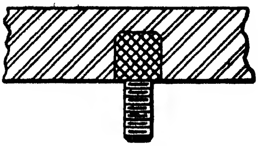

Fig. 30.—An insert with a shoulder flush with the face of the molding is better than one without a shoulder, as in Fig. 29, but may still give trouble through the tendency of the plastic to fill the thread.

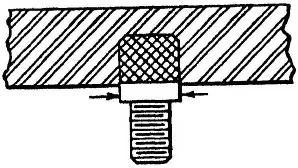

Fig. 31.

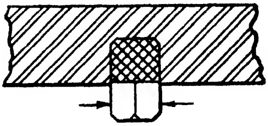

Fig. 32.

Fig. 31.—This insert is well designed and well placed, with the shoulder some distance from the face of the molding. The shoulder tends to prevent plastic from filling the thread and, when a nut is applied, tightening it does not tend to pull the insert out of the plastic, provided, of course, the bearing is against the shoulder. The outside diameter, indicated by arrows, should be held within close limits so as to make a good fit in the hole in the mold provided for it.

Fig. 32.—Projecting parts of inserts should be cylindrical or of stepped circular section, as otherwise the hole to support the insert usually must be hobbed rather than merely drilled in the mold.

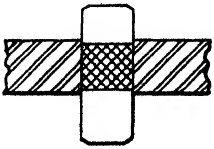

Fig. 33.

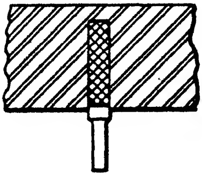

Fig. 34.

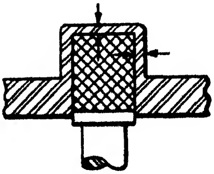

Fig. 35.

Fig. 33.—Inserts that telescope into both the cavity and the force should be avoided, as it is difficult to keep the plastic from flowing into the hole in the force and, if any lack of alignment occurs, the mold may be broken by the insert. An exception is in the case of long slender inserts that may have to telescope to afford proper support.

Fig. 34.—The length of inserts extending from the mold preferably should not exceed 2½ times the diameter, as long slender inserts are apt to be bent or broken by plastic that is forced to flow around them.

Fig. 35.—Thin wall around inserts should be avoided, as cracking of the plastic is likely to result.

Another example of metal inserts that are surrounded by plastic material is the modern automobile steering wheel. Molding usually has been done on compression presses using two preforms made to fit the metal insert, which is a spider forming the skeleton of the finished article. With the advent of large injection molding presses, the plastic material (generally cellulose acetate) can be forced into the mold and completely around the rim and can be made to cover, in addition, part of the spokes, much as in compression molding, but without, of course, using preforms. The metal insert adds strength and the plastic provides a comfortable grip and ensures excellent appearance.

Frequently it is desirable to press inserts into cored holes rather than to mold them into the part. The inserts should then have straight or helical knurls and preferably should be forced into the plastic while it is still hot, provided a shrink fit is desired. This procedure is often cheaper than molding the insert in place and permits using certain shapes of inserts that cannot be molded into the plastic.

Location of Pushout Pins and Their Effect on Appearance.— Pushout pins may be located either in the top or bottom portion of the mold. These pins can be operated either through or outside of the force, or they can be operated from below into the cavity. This applies to compression molding in the average vertical press, where the platens as well as the pushout pins operate vertically. The most common injection presses, such as are used to mold thermoplastic materials, operate horizontally and the pushout pins generally are actuated from one end only and in a horizontal direction.

Pushout pins are positively actuated and for that reason should have a strong surface to push against so as not to fracture or puncture the molded part. They should preferably push against ribs or bosses unless the molding is quite thick where the pins bear. These pins invariably leave marks in the molded part (unless they bear on metal inserts) and, for this reason, should be placed where the impressions left are least conspicuous. Quite often the ends of the pins are provided with insignia, numbers, letters, or other identification marks that are reproduced on the molded piece. Since the designer of the part does not often design the mold, he may not know where pushout pins will be located unless he consults the molder, as he should do. Usually, however, it is better to indicate on the drawing which surfaces must be free of pushout-pin marks than to leave this to the molder and later find that the marks come where they are objectionable.

Hollow pins or tubes are sometimes used for pushouts around fixed core pins for slender parts. The necessity for these should be avoided, if possible, to prevent additional cracks for plastic to enter and cause sticking and possible breaking of pushout parts.

Whenever possible, a part should be so designed that pushout pins can be used in both top and bottom halves of the mold, as in Fig. 36. This gives the mold designer a choice, which, in some cases, is very helpful. It then also becomes possible to have both top and bottom pushouts, which, especially in a multi-cavity mold, is a decided safety factor against loading and closing a mold in which some already molded part inadvertently has been left unseen by the operator.

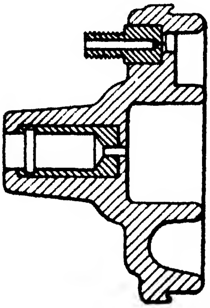

Fig. 36.—Molded part having two inserts and so designed that ejector pins can be used in either or both top and bottom portions of the mold. In this instance the pins are in line with the inserts and bear against them in the case of those on the hub side of the molding.

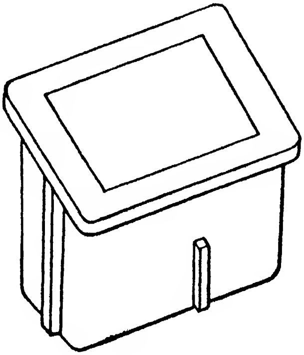

Fig. 37.—A rib or boss, such as that at front of this molding would involve an undercut, whereas, if extended to the parting line, as at side, the undercut is avoided. A similar condition applies for interior ribs that, if used, must extend from the parting line to the bottom of the molding as in the cabinet the interior of which is shown in Fig. 37*a*.

Rib and Boss Location Relative to Parting Line.—Ribs and bosses are used extensively to give sufficient strength and/or stiffness to the finished part, at the same time making the adjacent walls comparatively thin, thus effecting economy in material and in molding time. Naturally the ribs should also be as thin as the walls or as other conditions permit. Sometimes they taper away gradually and contribute to the streamlining effect and promote ease in molding and finishing, besides making for pleasing appearance.

Where inserts are used, it is good practice to surround them with a boss and sometimes to add ribs to the boss. This results in a stronger anchorage and helps to avoid excessive localized stresses.

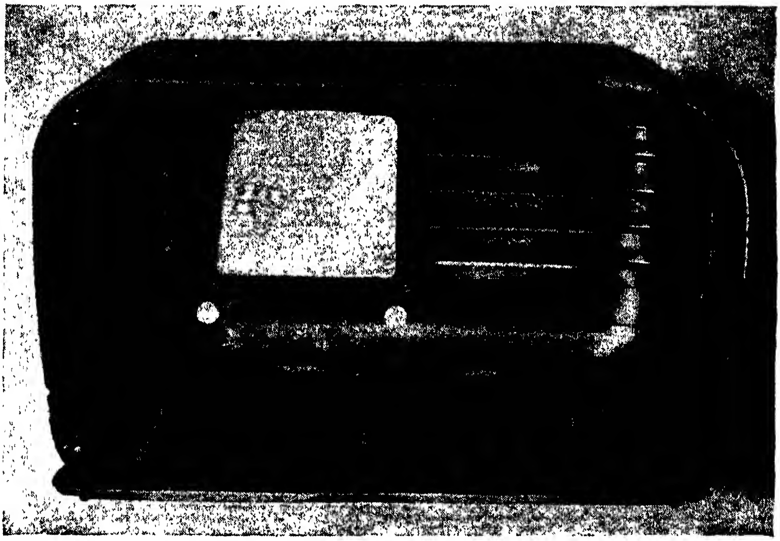

FIG. 37*a*.—A cabinet showing interior ribs.

Ribs and bosses must be so designed and so placed as not to interfere with the ready ejection of the part from the mold (see Fig. 37). For this reason it often becomes necessary to extend bosses or ribs on side walls as far as to the parting line, even though this is not required for other reasons. Interior side-wall ribs or bosses, such as are generally employed in radio cabinets, have to be extended from the parting line to the bottom of the cabinet (front face when in position of normal use, as in Fig. 37*a*). Such ribs must be given draft at each side as well as in depth so as to clear the mold or force and not interfere with ready ejection (see also drawing, Fig. 21, of cabinet pictured in Figs. 11 and 37*a*).

Louvers and How They Are Formed.—Whenever an opening (such as a louver opening) is desired in a molded part, there is always some attendant flash at the opening. If the flash has to be removed from a frail rib or where scraping or filing is done in an inaccessible or conspicuous place, there is either danger of damaging the part or the possibility of making it unsightly. The accompanying illustrations, Figs. 11, 21, 37*a*, 38, 39, and 40, illustrate various methods of obtaining good results when such openings are to be provided. It is best to design openings where flash occurs in such a way that the removal of the flash can be done readily and without leaving a clipped edge that is likely to be noticed in service.

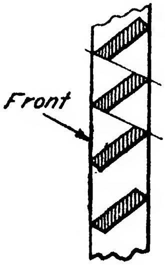

FIG. 38.

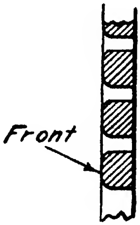

FIG. 39.

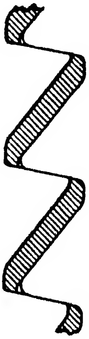

FIG. 40.

FIG. 38.—Louvers are simply made in this manner but flash occurs along the diagonal lines. The angle of these should be preferably not less than 10 deg. to reduce the chance that the force (from rear) will not damage the cavity projections (from front). Edges from which flash is removed are not prominently seen when the cabinet is in service.

FIG. 39.—Another way of making louvers. The narrow openings prevent the edges where flash occurs, at rear face, from being seen when the cabinet is observed from the usual point of view.

FIG. 40.—Details of an actual louver construction. Flash is nearly but not quite horizontal, yet it is quite easily removed and the edges affected by removal cannot be seen without stooping to view the openings from below normal eye level.

Convenient Fastenings.—It has become common and efficient practice to provide integral studs or projections or recesses in the molding so that a speed nut, or clip, can be slipped over the projection or into the recess to fasten two or more parts together. If the nut is to be permanently secured, the projection is generally circular in cross section, but if the projection is of a D or similar section, the nut can then be removed by turning it so

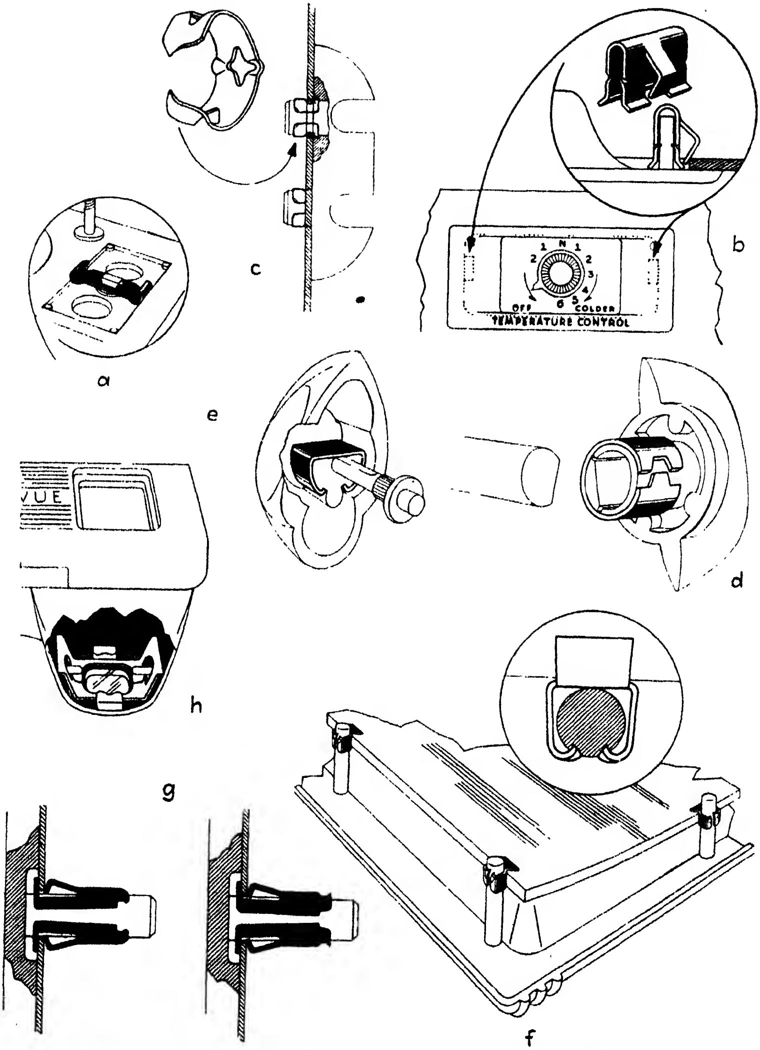

FIG. 41.—Types of (patented) Tinnerman speed nuts and speed clips used for fastening plastic moldings together or to mating parts: (*a*) Nut having prongs to grip a rectangular stud integral with a molded plate. Rounded spring ears hold the plate removably in an opening in a metal plate. (*b*) Clip having four sharp barbs to grip a projecting stud or rib on a molding and spring ears to hold the molding in a hole in a metal plate. (*c*) Clip fits around a circular stud molded integrally with shelf support and locks molding to holes in metal. (*d*) Molded knob with split hub has spring clip to hold hub to a D-shaped shaft. (*e*) Clip fastens plastic knob with molded projection to a D-shaped shaft. (*f*) Studs molded integral with a bezel receive pronged clips to hold a glass. (*g*) Tubular clips grip integral studs locking part either permanently or with a sliding fit. (*h*) Barbed clip grips a rib and holds a lens to molded part.

that the locking tongues of the nut clear the stud. As such integral studs are likely to be rather brittle and easily broken, there should be a liberal fillet where they join the body of the molding. A stronger fastening results if a metal stud or insert is used, but the stud need not be threaded if a speed nut is to be applied over it. One form of speed clip designed to fit into molded recesses is now available and makes a stronger fastening than one involving an integrally molded stud. Still other forms of speed clips are available for special types of fastenings as, for example, fastening a plastic knob to a shaft or spindle. Several forms of speed nuts and clips are shown in Fig. 41. Moldings can be fastened together also, or parts of other materials can be fastened to moldings, by drive screws or self-tapping screws. Holes for such screws can be cored if the holes are not too small or too deep (provided they are so located that coring is feasible) but small holes are commonly drilled. The hole diameter should be such that the screw will not split the plastic. Tubular rivets are sometimes used advantageously in fastening plastic parts together or to metal parts. Projections or studs formed integrally with thermoplastic moldings sometimes are cupped at the end and, after being passed through a hole in the mating part at assembly, are heated enough to flow the plastic and effect a fastening, somewhat as if riveted.

Dimensional Tolerance.—Dimensional tolerances cannot be given definitely because circumstances so often alter cases. Among the factors affecting dimensional tolerances are the following:

1. Kinds of materials used.

   Not all materials have equal dimensional stability. The following typical materials vary in the order named (from the most stable to the least):

   a. Phenolic, heat resistant.
   b. Phenolic, low loss.
   c. Polystyrene.
   d. Phenolic, general purpose.
   e. Phenolic, acid and alkali resistant.
   f. Urea.
   g. Aceto-butyrate.
   h. Cellulose acetate.

2. Humidity and temperature variations.

   In this respect the materials generally change their size and shape in about the same order as just outlined under Kinds of Materials Used.
3. Conditions under which the materials are molded, such as variations in temperature pressure and time cycle used in molding.
4. Condition of the material prior to the actual molding.

   Material that has been exposed to excessive humidity or to extreme temperature variations has to be "normalized" before molding; otherwise the moldings will not have dimensional stability.

When all the above factors are considered, it is evident that unvarying rules cannot be given. It is unwise, however, to specify tolerances that are closer than absolutely necessary in any case. Costs are likely to be lowered if tolerances are made as wide as conditions permit. If conditions make it essential that close tolerances be held, the molder should be consulted and the tolerances should be made such that he can hold them in the molded part.

Another factor that enters into close tolerance specification is the fact that extreme care or unusual conditions have to be met in tooling or in molding or in both. Sometimes special cooling fixtures are required and, when these or special gages are necessary, they have to be made and maintained. When moldings must be inspected and handled with abnormal care, costs are increased.

Wear and tear on the mold also affect dimensions. If mold parts become worn so that specified tolerances can no longer be held, these parts have to be repaired or replaced, often at considerable expense.

Whenever material of good dimensional stability is specified and all necessary precautions are taken, holes of approximately 1 in. diameter or smaller can be held within ±0.002 in. or closer of the specified diameter. Larger openings and general dimensions of parts not exceeding a few inches over all can often be held readily within approximately ±0.005 in. On larger pieces tolerances should not be closer than ±0.001 or 0.002 in. *per inch.* These tolerances apply as between integral parts of the mold.

Larger tolerances are likely to be required when the *measurement is across parting lines* or between mold parts that have relative motion.

Whenever a molded part is subjected to heavy stresses in service, the possibility of creep, or cold flow, should not be overlooked. Cold flow occurs when a sustained and, especially, a heavy load is imposed upon the molding. This causes distortion with consequent change of dimensions. Plastic materials differ greatly in their resistance to cold flow, and the same general type of material often varies in cold flow in different groups of that type and in different grades within the group. Thermoplastics in particular are subject to cold flow, and the softer the grade the higher the cold flow is likely to be. Soft grades of thermoplastics usually involve a higher proportion of plasticizer than the harder grades. Many plasticizers evaporate with aging, and the loss of plasticizer usually results in shrinkage and may result in warpage or even in cracking. Hence dimensions that are within required limits when the molding is shipped may change subsequently for different reasons, again making it apparent that it is often futile to specify close dimensional tolerances initially.

Machining as Affecting Design.—While most plastics lend themselves moderately well to machining, it is good economy and often preferable so to design the part that subsequent machining is either eliminated or minimized. From an appearance angle, so-called "mold" finish is generally sufficient and more lasting than that on surfaces that have been machined and then buffed. Machining can be avoided, in general, if undercuts are not required and if the various parts or holes can be formed by parts of the mold or are not at such an angle or of such shape that normal molding is not feasible.

In more complicated mold designs, as already explained, it is possible to have cams, inserts, loose sections, split cavities, or the like to effect successful molding of very complex and irregular designs. When the piece is being designed, however, the various sections of the mold should be visualized to see that they have ample sections for adequate strength as well as to resist constant changes in temperature.

Conventional hinges, catches, and other fastenings can often be an integral part of the molding, as in Fig. 42, or they may

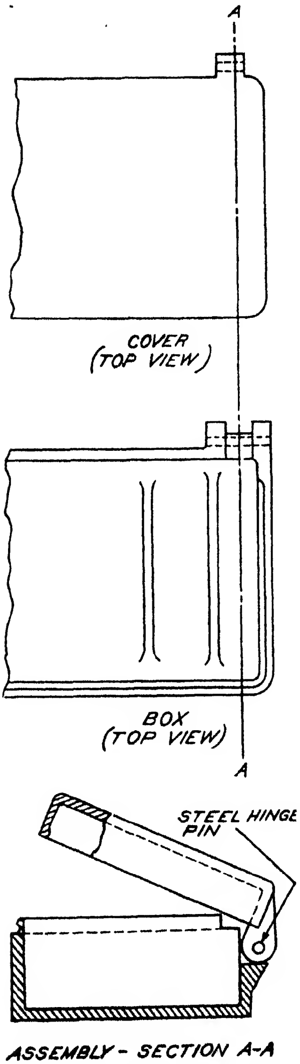

FIG. 42.—Half of a conventional hinge having three projections through which the pin hole is drilled. The cover molding has two projections that fit between pairs of mating projections in the base.

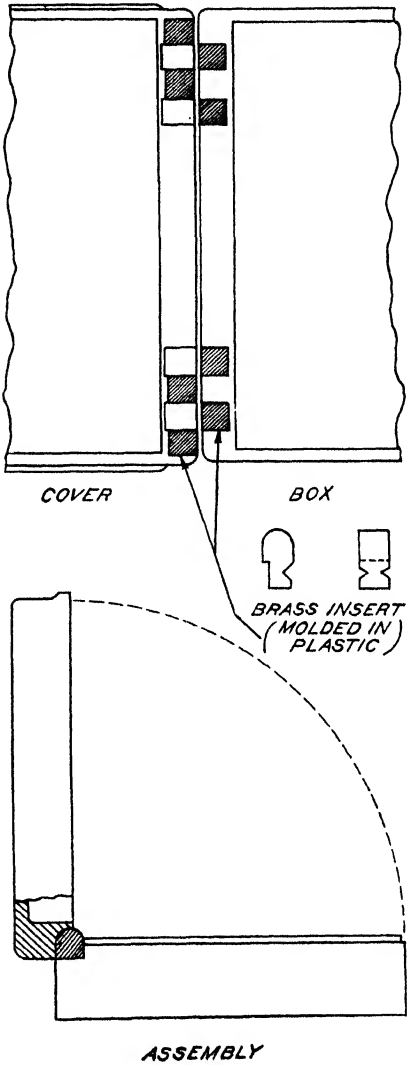

FIG. 43.—Detail of hinge that is made by inserts (one of which is shown separately) embedded into a thick section of the molding when it is made. Holes for the pin are drilled subsequently. The cover has similar inserts staggered to mate with those in the base.

have to be metal parts that are embedded as inserts, as in Fig. 43. At least one make of spring hinge that is applied without machining the molding or using metal inserts is available (see Fig. 44). Quite often, however, holes are either molded or drilled and tapped into the molding and metal hinges, catches, or locks are subsequently fastened by means of screws (Fig. 45). The use of drive screws and of self-tapering screws is feasible if holes sized to suit are provided, but cracking is likely to result unless the section is such as to provide plenty of plastic around the screw. Figure 46 shows a form of hinge involving small undercuts but the conical projections and the holes they fit are so small that the molding can be sprung slightly and without injury in ejecting it from the mold and in later assembly.

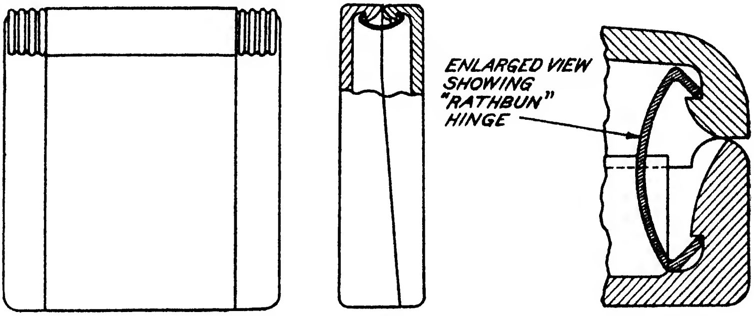

Fig. 44.—Box with Rathbun type of hinge that holds the moldings together by means of a C-shaped spring snapped into place. Although the recesses in the moldings for the clip constitute undercuts, they are not deep and are so placed that the molding, if rocked when pushed off the force, clears the latter. Edges of the moldings at the hinge are so shaped that the cover rocks and it is held open automatically when moved through 90 deg.

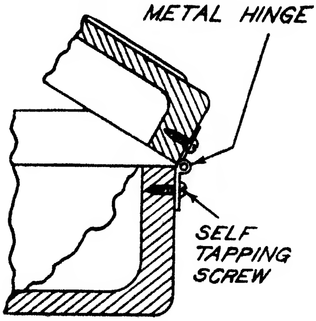

Fig. 45.—Metal hinges fastened to moldings with self-tapping screws.

Threads, both male and female, sometimes can be molded if not too fine or too small in diameter, but molding costs are sometimes greatly increased when threads are molded. The coarser a thread is, the easier it is to mold. Threads of rounded contour for bottle caps are always molded in the cap and it is feasible to strip the caps off the studs that form the core (Fig. 47), thus saving the time required (otherwise) to unscrew the caps from the cores. Stripping of this type is not successful unless done before the material becomes hard and brittle or if the design is such that the elasticity of the material cannot be utilized because of mechanical interference or because the structure of the part does not admit of the stretching that stripping entails. It is usually necessary to unscrew a part molded over a threaded stud or to unscrew the stud from the molding, especially if reasonably close dimensional limits must be held. Male threads can be molded only at mold partings, by using split sections in the mold, by unscrewing the molding from the mold or a part of the mold from the molding. Such operations, though often feasible, require time and result in added mold cost and in greater molding cost. It is sometimes better to use threaded metal inserts than to mold threads on or in the piece. Female threads can be tapped in some moldings but tapping is often rather difficult, as taps wear out rapidly and sometimes require frequent sharpening. Male threads can be cut or chased but involve difficulties similar to those encountered in tapping.

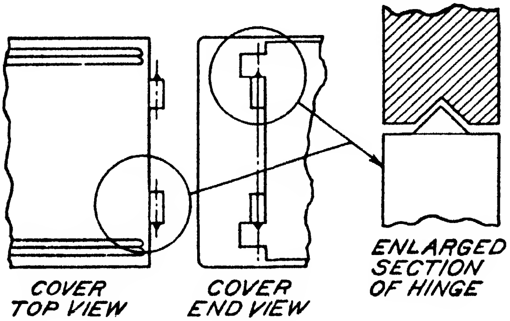

FIG. 46.—Special form of hinge involving integrally molded conical projections that mate with corresponding conical holes in the other half. Although undercuts are involved, they are shallow and the moldings can be sprung enough to free them from the mold and to assemble them subsequently.

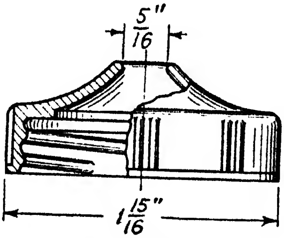

FIG. 47.—Dispenser type of bottle cap having a thread of rounded contour. This molding is stripped off the core that forms the thread, without unscrewing, but the plastic must be a flexible type or be stripped before it becomes too hard. Close tolerances cannot be ensured for stripped threads, however.

Design from an Appearance Standpoint.—Manufacturers on the alert for products that have sales appeal know the importance of attaining good appearance in the product. Besides ensuring simple and attractive lines and shapes, it is necessary to select proper material and the best color or colors in which it is to be used.

Unless the manufacturer has his own thoroughly capable stylists, it is expedient to employ a qualified industrial designer to undertake styling the product before engineering design is so far advanced that changes in size and external shape cannot be effected.

Primarily, the part should be functionally designed so that it adequately serves its purpose mechanically, electrically, chemically, and in other respects. The designer must consider also how the part can best be molded and, if necessary, make sufficient alterations to facilitate molding without sacrificing the essential functions of the part. Qualified custom molders may well be asked to offer expert advice on this point. At the same time, aesthetic or appearance factors require attention so that the product will have sales appeal. Designing products for appearance and salability is fundamentally an engineering problem and the ideal designer is a type of artist-engineer who can visualize and correlate engineering, production, and appearance factors to best advantage. Such a designer should know not only what constitutes good mechanical design; he must have an appreciation and knowledge of aesthetics and must know production methods and materials. All designs to be produced as plastic moldings should be checked to make sure that they come within the bounds of practical molding procedure.

In plastic moldings, the material itself usually contributes much to fine appearance as well as to structural soundness. But symmetry of forms, simplicity of lines, a fairly uniform wall section, minimum size commensurate with other requirements, generous curves to facilitate free flow of the plastic material in the molding process, and judicious choice of color all influence a design deserving to be called "good."

There are no hard and fast rules for choosing a color or color combination. It is, however, usually considered wise to avoid large areas of vivid color and to employ them chiefly for accent. Neutral and pastel hues are more generally favored for major areas but they can often be broken up profitably by using contrasting or complementary colors. The value of a certain color, however, cannot be overlooked if the merchandise has long been identified by this color. Complementary tones are often employed on accessories to accentuate and enliven the central color in particular cases.

Generally speaking, the ligher colors carry the greater sales appeal, especially for feminine buyers, whereas the dark and somber hues are at the bottom of the list in sales appeal. Blue, green, purple, and some shades of gray are among colors that are generally classed as "cold" or "cool" colors. They do not excite the emotions, as do red, yellow, and orange, which are known as "warm" colors. When plastic products are worked out in the cool colors they usually appear larger than they actually are. Conversely, the warm colors have the opposite effect.

Designers generally do not favor the use of mottled colors, especially if the mottles are pronounced. Solid colors are preferred. On the other hand, so-called "mahogany" and "walnut" effects (presumed to simulate wood grains) are countenanced and have a certain utility. Sometimes their use serves to hide defects otherwise more apparent and this lowers costs by reducing rejects. So-called "wood grain" effects have a certain appeal in such products as radio cabinets and bezels for wooden cabinets even though they do not, in reality, closely simulate wood.

Appearance is often enhanced materially by the use of clear transparent plastic moldings or tinted transparencies. They afford a depth not secured otherwise and a high degree of light transmittal. Translucent molded plastics have a similar appeal but usually give less depth and greater light diffusion. The latter quality is especially useful in lighting accessories and makes feasible such products as the bowls of lighting fixtures, for which ivory tints are usually preferred.

These are among the factors bearing upon appearance that deserve and often require the judgment of a qualified artist, preferably one with experience in styling for a particular trade. No matter how skillful a designer may be, from a strictly engineering standpoint, if he lacks ability to make his product look the part and appeal to those who are influenced by beauty of line, form, and color, he should be guided by those who have this ability. On the other hand, it should not and need not involve sacrifice in function or performance from a utility standpoint to take advantage of really good styling. Ability to perform a particular function is usually an absolute essential, but not the only one. It is futile to turn out a design that is functionally perfect but that, for lack of aesthetic appeal, cannot be marketed successfully. Commercial success requires that the two go hand in hand. This applies, of course, chiefly to products commonly exposed to view. In hidden parts, which are seldom or never seen by the purchaser, appearance may be of little or no consequence, whereas proper functioning is the primary if not the only consideration except that cost must be held within required limits.

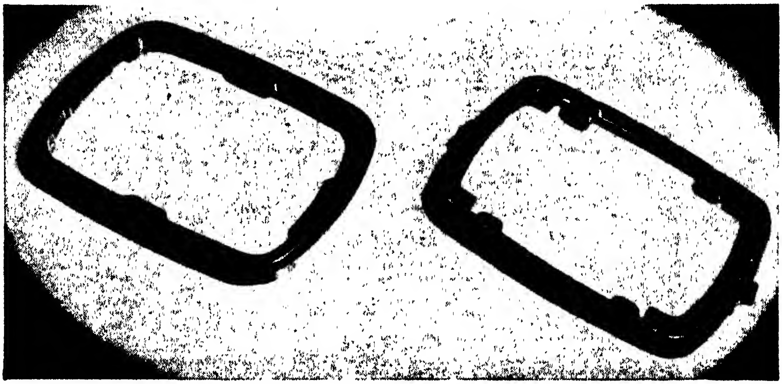

Fig. 48.—Toaster base showing how it appeared before (*left*) and after restyling. The new style is not only much better in appearance but, because it has a section more nearly uniform in thickness, is stronger. It also costs less to produce.

Since really good design usually requires utmost simplicity in line and form, such a design is often the most economical from the standpoint of minimum cost in manufacture (see Fig. 48). There doubtless are cases in which improved appearance increases cost, but even then the greater sales appeal may more than offset such an increase, thereby justifying the changes required.

Letters, Numbers, Trade-marks, and the Like.—Letters, numbers, and characters, whether raised or depressed, should be placed in such position that they do not interfere with the ready withdrawal of the molding from the mold. They should be on either the top or the bottom of the piece or in a plane preferably perpendicular or nearly so to the line of travel of the force.

They can be placed on either a curved or an angular surface provided that they do not involve undercuts. About the maximum angle that a plane forming the base of the letters or characters may make with the line of travel of the force is 45 deg. Wherever placed, the characters have to be carefully constructed so that no undercuts are inadvertently made. Letters of the block type are the easiest and cheapest to produce as engravers

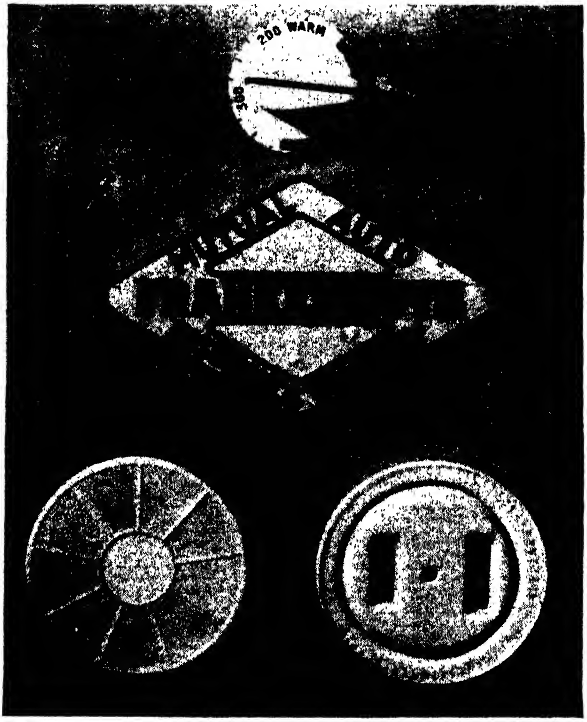

FIG. 49.—Samples of moldings in which both raised and depressed letters and numbers are produced by suitable engraving of the mold cavity or the force. Various types of roughened surfaces are shown on lower left sample. The gas-stove knob dial has depressed letters and a depressed stripe filled in with paint, and the insurance company sign has raised letters darkened by inking with a roller (giving a type of finish that wears or rubs off easily). In certain molding, made from clear transparent plastic, the name is made in depressed (reversed) letters sunk into the underside and later filled in with gilt paint applied with a brush or by spraying through a mask. Subsequently, the whole back is sprayed with dark enamel, making the plastic appear dark with the letters against it in gold. As the letters are on the back and in recesses, they show through the clear plastic, which also protects them against scratching, making an attractive and enduring name plate. Circular part, *lower right*, is a speedometer dial on which the triangular graduations are recessed but not yet wiped in.

generally are supplied with various standard sets of these and special templates so that expensive handwork is not necessary.

Letters or characters that are stamped or engraved into a cavity or on a force appear raised, of course, on the finished product. As it is much easier to deboss by engraving into the mold than to produce embossed or raised letters or characters in the mold, raised letters or characters on the molding should be specified if lower mold cost is a factor. In the event that the cavity is hobbed, however, the reverse is true, as the engraving is then made into the hob and the latter yields raised letters in the die so that the molding has recessed letters.

Depressed letters and characters on the molding are, in general, readily filled with paint, giving a pleasing and striking contrast at low cost. Letters thus wiped in are quite permanent because the point, being below the surface, is not likely to be abraded or worn off (see Fig. 49).

Hot stamping is the term generally employed to describe the process of marking molded objects with letters, numbers, insignia, etc. This operation takes place after the part has been molded, trimmed, or otherwise finished. The part to be stamped is securely held in place while a stamp (underneath which is an acetate or cellophane film or ribbon, gilded or otherwise colored) is pressed into contact with the film, which, in turn, is forced against the molding. The stamp is heated, generally by electricity, and pressure against the molded part imparts an impression, which is, in reality, a brand, and causes the film to adhere to the piece where the letters press against it. The press employed usually resembles a kick press, but, where high production is required, a power press and automatic feeding, designed to make the operation very rapid, are employed.

Hot stamping may be specified upon either thermoplastic or thermosetting materials. The operation is generally cheaper than having suitable characters engraved into the mold and then filled with color, as an added hand operation, but the latter generally produces a better job from an appearance and permanency angle. Recessed letters and numbers molded into the piece sometimes are filled in by using a hot stamp, as above outlined, to force film into the recesses, this being more rapid than hand filling and wiping operations.

Bibliography

DELMONTE, J.: "Plastics in Engineering," Penton Publishing Company, Cleveland, 1940.

"Designing Molded Plastic Parts," General Electric Company, Pittsfield, Mass.

DU BOIS, J. H.: "Plastics," American Technical Society, Chicago, 1942.

"Molding Technic for Bakelite and Vinylite Plastics," 2d ed., Bakelite Corporation, New York, 1941.

"A Ready Reference for Plastics," Boonton Molding Company, Boonton, N. J.

SASSO, JOHN: "Plastics for Industrial Use," McGraw-Hill Book Company, Inc., New York, 1942.

SIMONDS, H.: "Industrial Plastics," Pitman Publishing Company, New York, 1941.

The following publications have carried occasional articles dealing with the design of plastic moldings:

Bakelite Review, Bakelite Corporation, New York.
British Plastics (monthly), London.
British Plastics Year Book, London.
Durez Molder, Durez Plastics & Chemicals, Inc., North Tonawanda, N. Y.
Electrical Manufacturing (monthly), New York.
Machine Design (monthly), Cleveland.
Modern Plastics (monthly), New York.
Plastics (monthly), London.
Plastics Bulletin, E. I. du Pont de Nemours & Company, Arlington, N. J.
Plastics Catalog (annual), New York.
Product Engineering (monthly), New York.

PART II

CHAPTER IX

DIE CAST OR SAND CAST?

By Herbert Chase

Both sand castings and die castings are products of wide and unquestioned utility. Both enter in a large way into the production of machine elements and many other products because of the economy with which they are turned out. In certain classes of products, neither can take the place of the other, but in the field of light and medium- to small-sized castings, there is a measure of competition between the two. A logical choice depends upon many factors.

Much may be gained by an effort to evaluate the two types of product. It must be admitted, however, that no hard and fast rules can be laid down that will, in themselves, settle the whole question. Too many variables are involved and they change with market conditions, labor supply, and the like. Some general statements may be made to help clarify the situation, but it should be understood that they are generalities and thus are subject to exceptions. Most of the important considerations are outlined in Table I and are further explained below. In addition there are appended specific examples of actual experience based either on cases in which substantially the same part was made by die casting and by sand casting, with costs each way, or in which the part was figured for production in both forms and one form selected either on a price basis or for some other controlling reason.

Here, the author gives his own conclusions. With these some engineers may not agree. An effort has been made, however, to present in an impartial way such facts as it has proved possible to secure in numerous contacts with those who are face to face with the problems as a part of their regular duties.

For simplicity, the comparison is based, except where otherwise indicated, on unalloyed gray iron for the sand casting and zinc alloy for the die casting, as each is most widely used in its respective field. Both are at the low end of the cost scale and both have good casting qualities. It should be noted, however, that where qualities not to be had in gray iron, on one hand, and zinc alloy, on the other are required, many other materials for sand casting and die casting are available. Many alloy irons and numerous nonferrous sand-casting alloys are in extensive use and can match or exceed the physical and some other properties of the die casting. For die casting, besides the zinc alloys, there are the aluminum and the magnesium alloys characterized by light weight; the brass alloys, some of which have physical properties comparable to mild wrought steel; and the tin and lead alloys for a few rather special purposes. There are instances where permanent-mold castings, as distinct from the above types, deserve consideration and may be preferable to either a sand casting or a die casting. Comparisons in this regard appear in another chapter.

Among the outstanding advantages of gray-iron sand castings (to be dealt with in more detail under specific headings in subsequent paragraphs) are low cost of material having many excellent qualities, moderate cost for patterns and tooling, ease of casting at a fairly good production rate, good machining properties, and strength adequate for a wide variety of uses. Hardness and rigidity are often highly advantageous. These are offset, when compared with die castings, by such shortcomings as higher cost of machining, need for heavier sections and for wider dimensional tolerances, high cost of coring, low ductility, and low impact strength.

Included in the advantages of die castings are rapid production within dimensions so close that little machining is needed, thin sections and lighter weight, accurate coring at only slight or no extra cost, smooth surfaces without sand inclusions, lower finishing costs, and superior strength, especially in impact. Offsetting these are such items as higher material cost, higher cost for dies than for patterns, certain limitations on shape, especially in some types of coring, and, in most alloys, softer materials, some of the latter being subject to cold flow.

TABLE I.—COMPARISON OF FACTORS AFFECTING CHOICE OF CASTING

	Die castings	Sand castings
Materials....	Zinc alloys lowest in cost* and most widely used. Aluminum alloys next in cost and extent of use. Alloys of copper (brass), magnesium, tin, and lead for special purposes.	Gray iron lowest in cost and widely used. Alloy cast iron available for many special purposes. Numerous nonferrous alloys available for special purposes.
Weight (specific gravity).	Zinc alloys average 6.7. Aluminum alloys average 2.75. Magnesium alloys average 1.81 (lightest). Lead alloys average 10.65 (heaviest).	Cast iron average specific gravity about 7.28. Range of gravity in nonferrous alloys is the same as for die castings.
Section thickness...	Ranges from 0.025 in. upward in very small castings, from 0.040 in. upward in medium-sized castings, and from $\frac{1}{16}$ in. upward in large-sized castings.	$\frac{1}{16}$ in. minimum attained in few specialized castings, but $\frac{3}{32}$ to $\frac{1}{8}$ is considered usual limit in small castings with $\frac{3}{16}$ to $\frac{1}{4}$ in. minimum in larger sizes.
Coring........	Can be complex; cores as small as $\frac{1}{32}$ in. diam. can be used. Fine threads can be cast where saving over tapping results. Cores involving undercuts often are not practical. Effect of coring on casting cost slight.	Can be complex and often involve undercuts but cores less than $\frac{1}{4}$ in. thick are seldom practical. Making and placing of cores greatly increase casting costs.
External form.......	Can be complex and involve fine details but undercuts often require extra die parts.	Can have almost any shape and include undercuts but these may greatly increase molding costs.
Surface smoothness..	Can be such that only buffing is needed to ensure excellent surface for plating.	Usually requires grinding, polishing, and buffing or equivalent to attain equal smoothness.
Dimensional accuracy.	Commercial tolerance ±0.001 to 0.003 in. per inch on most important dimensions.	Commercial tolerance $\pm\frac{1}{32}$ in. for important dimensions on small castings but is increased for core work.†
Tooling (including die for die casting).	Die cost higher than pattern cost but tooling for machining is likely to be lower because of fewer operations and lighter cuts.	Pattern costs may be 15 to 25 per cent or more of cost of die. Tooling for machining likely to exceed that for die casting.
Production rate . .	50 to 1,000 cycles an hour (average about 200 to 300 an hour), one to several castings per cycle (one man), time for core operation included.	25 average small molds an hour (one man) not including pouring or making or placing of cores. One to several castings per mold.
Material cost* (melting extra).	Average about $8\frac{1}{4}$ cents per pound for zinc alloys (but castings often weigh less than sand castings).	About $1\frac{1}{2}$ cents per pound plus cost of sand and core materials.
Cost of machining...	Low because of close dimensions and smooth surfaces. Only light cuts when any are required. Many holes cored to size. Metals free from hard spots and sand inclusions and easily machined.	High where close dimensions and smooth surfaces are needed; not hard to machine in general, but hard spots and sand inclusions tend to dull tools.

TABLE I.—COMPARISON OF FACTORS AFFECTING CHOICE OF CASTING.— (*Continued*)

	Die castings	Sand castings
Cost for applied finish.	Low because of smoother surfaces (especially important where plating is required). Hidden parts require no finish as metal is not subject to red rust.	Usually higher for equal smoothness and general appearance. Hidden parts often require finishing to avoid red rusting when in ferrous alloy.
Fastening at assembly and inserts.	Can have integral rivets or extensions to be headed or spun over, or accurate cored holes. Inserts readily cast in place.	Integral fastenings usually not feasible and cored holes are relatively inaccurate. Inserts seldom feasible.
Strength and ductility.	Zinc alloys generally superior in tensile strength; much superior in impact strength and in ductility to gray iron (see Table II). Some other die-casting alloys inferior to certain sand-cast alloys.	Gray cast iron superior in compressive strength but inferior in tensile and much inferior in impact strength and ductility. Some other alloys equal to or better than die-casting alloys.
Hardness and cold flow	Zinc and aluminum alloys range from 60 to 83 Brinell. Brass 105 to 180. Zinc alloys are subject to cold flow.	Gray cast irons range from 100 to 700 Brinell. Dimensional stability of cast iron an asset in some applications but material is not entirely free from cold flow. (See A.S.T.M. Symposium on Cast Iron.)
Appearance..........	Excellent in as-cast form because of smoothness and color and in finished form where fine detail and sharp lines are required.	Rough and, in some instances, lacks detail. Color of gray iron is dull.

---

* Prewar costs.

† Figure is approximate and varies with many conditions. See chapter on Sand Castings.

Because of die costs, die castings are seldom economical when quantities required run below 1,000 to 5,000, unless the corresponding sand casting necessitates much core work, too much machining, or too high costs for finishing. There are, of course, many large sand castings not capable of duplication in die casting, but there are also many small and some large die castings quite impossible to duplicate in sand-cast form on an economical basis.

Such are some of the generalities, which are, for the most part, fairly well understood in the metalworking industries. It is desirable, however, to set down the facts more fully under specific headings if one is to gain a more thorough insight into the subject.

Materials Available.—These have been mentioned, and data on their respective properties are given in Table II. Relative to the whole group of die-casting alloys, however, it is to be

TABLE II.—PHYSICAL PROPERTIES OF SAND-CAST GRAY IRON AND OF DIE-CASTING ALLOYS

Material*	Tensile strength, psi	Compressive strength, psi	Impact strength, Charpy, ft.-lb.		Shearing strength, psi	Elongation in 2 in., %	Brinell hardness	Specific gravity	Weight per cu. in.	Section thickness usual min., in.	Commercial dimensional tolerances, in. per in.
			1/4 in. square unnotched	0.394 in. square unnotched							
Unalloyed gray-iron sand cast	20,000– 32,000[a]	70,000 200,000[d]	No data	2.1– 2.9[c]	25,000– 80,000[d]	Almost nil	100–[e] 700[f]	7.00[g] 7.70[h]	0.252[g] 0.278[k]	1/8–1/4[s]	±1/32[s,t]
Zinc alloy die cast	40,300– 47,900	60,500– 93,100	18–20	No data	30,900– 45,800	3.0– 5.0	74–83	6.6– 6.7	0.24	0.025[s]	±0.001[k]
Aluminum alloy die cast	32,000– 34,000[b]	No data	1.0– 10.0	No data	18,000– 26,000	1.0– 4.0	60–95	2.66– 2.98	0.095– 0.103	0.030[s]	±0.002[k]
Magnesium alloy die cast	26,000– 30,000[b]	No data	1.0– 2.0	No data	No data	1.0– 3.0	60–62	1.81	0.066	0.030[s]	±0.002[k]
Brass die cast	55,000– 95,000[b]	No data	33 min.	No data	50,000– 55,000[j]	10–20	120–180	8.15– 8.47	0.299– 0.303	0.050[s]	±0.003[k]

* Data on die-casting alloys may be compared in some cases with those on nonferrous sand-casting alloys as given in Chap. II. —EDITOR.

[a] Ordinary gray iron. Physical properties can be greatly improved by alloying with nickel, chromium, etc.

[b] Same or similar alloys can be sand cast with same or, on some scores, superior physical properties. Wider choice of alloys available for sand casting.

[c] Values to 5.0 ft.-lb. obtained with certain alloy iron, but note that area of specimen is 0.155 sq. in. or nearly 2.5 times that of die-cast specimens (0.0625 sq. in.).

[d] Higher value is for alloy cast iron

[e] Full annealed.

[f] Chilled and heat-treated.

[g] Coarse grain.

[h] White iron.

[j] Yellow brass; probably higher in other brasses.

[k] Where controlled by integral die parts; somewhat wider as between moving die parts.

[s] For small castings.

[t] Wider where core work is involved.

noted that aluminum and magnesium alloys, and especially those copper alloys grouped under the term "brass," are harder to die cast and involve greater die expense than the zinc alloys and those with still lower melting points. Beside being low in cost, zinc alloys can be readily cast with smooth surfaces, good properties, thin sections, and minimum die costs. Consequently, other alloys are employed only when they yield particular properties not to be matched in the zinc alloys. There is no precise parallel for this in sand casting, but the low cost of gray iron and its fluidity in molten form, which makes for easy casting, as well as certain excellent properties, account for its preponderant use in sand casting.

Specific Gravities.—The specific gravities of zinc alloy and gray iron are nearly the same: 6.7 average for zinc alloy and 7.28 average for cast iron. The slight advantage in total weight of the zinc alloy on this score is increased in many castings, however, by reason of the thinner sections in which it can be cast and still have a wide advantage over cast iron in impact strength. If aluminum and magnesium die castings are compared with cast iron, the weight saving is still greater (see Table II for relative specific gravities). The cost per die casting in aluminum alloy is only a little higher than in zinc alloy, and, in certain unusual cases, quotations are the same or slightly lower for aluminum alloy.

Section Thickness.—Section thickness invariably has a lower allowable minimum in the die casting than in the sand casting, and such thin sections even enable the die casting to compete with stamping in numerous instances. Clock cases, for example, are produced with sections averaging about 0.030 in., and housings as large as 11 by 7 by 7 in. are made in sections averaging about 0.040 to 0.045 in. using zinc alloy. Aluminum die castings do not have to be much thicker. As against this, although some special flat lock parts are said to be sand cast in iron only 1⁄16 in. thick, 3⁄32 to 1⁄8 in. is considered low for small iron castings, and 3⁄16 to 1⁄4 in. is low for large iron castings. Even large die castings such as full-size automobile radiator grilles seldom exceed 1⁄8 in. in average thickness and often have thinner sections. Die castings can have sections of 1⁄2 in. or thicker but are seldom economical except perhaps in small castings. Much heavier sand castings are produced, of course, and porosity may occur in thick sections in both die and sand castings.

Coring.—This involves several considerations that are different in die casting than in sand casting. In sand casting, cores as small as ¼ in. diameter are considered small and drilling usually preferable. Cores down to $\frac{1}{32}$ in. diameter are used in die castings and almost any size hole, in which the depth does not exceed two to three times its diameter, can be and usually is cored, especially if in a favorable position. In general, however, the core cannot involve an undercut and, if it comes at an angle to the direction of die motion, some increase in die cost is involved. Sand cores can have almost any shape, but they have to be made up for each casting in special core boxes and involve several extra operations in production and in placing them in molds, slowing production accordingly. Operation of movable cores in die casting sometimes lengthens the casting cycle, but cores are often arranged for automatic operation and then have little or no effect on the time of the casting cycle. Even when coring increases die costs and lengthens the cycle, it often effects important economies by savings in machining and in metal. It may do likewise in sand casting, but the effect on cost is likely to be less favorable because of the extra labor and delays that cores entail. The fact that close dimensions are difficult to hold in sand coring may require added machining operations.

External Shapes.—These can often be the same in die-cast as in sand-cast parts, but in each type some shapes can be made that are not feasible in the other type. Since a die is not flexible, the die casting must clear it when ejected, whereas the sand mold is destroyed after each casting. Patterns must clear the sand mold, of course, but they can be split or made with loose parts, or the mold can be parted in such a way as to yield castings not feasible in die casting. Many dies have slides carrying parts that form undercuts and the die can, in effect, be split in various ways when any extra costs entailed are justified. Greater faithfulness in detail and greater sharpness of lines and edges are feasible in die casting.

Surface Smoothness.—Surface smoothness invariably favors the die casting or can be made to do so by care in finishing die surfaces. Sand moldings necessarily show the irregularities of the sand surface, and tumbling and sand blasting do not remove these entirely. Die castings are now produced with surfaces so smooth that only light buffing is required before plating.

Dimensional Accuracy.—Dimensional accuracy, being much greater in the die casting, is among its important advantages. Relative commercial tolerances are given in Table II, and the much closer limits held in die casting tend to reduce machining costs to an important degree. Sometimes no machining, except to remove flash, is required. When machining is needed in the die casting, less allowance for metal removal is made than in the sand casting.

Tooling Costs.—Tooling costs, as a rule, favor the sand casting when only the cost of the die required is compared with the cost of patterns. Pattern, core-box, and match-plate cost sometimes runs up to or above 25 per cent of die cost. Tooling for machining the sand casting is likely to exceed that for machining the die casting, and in some instances a greater number of machine tools are used in the production line for the sand casting. In certain instances, tooling for machining brings the total cost for tools for the sand casting above the total for the die casting. In the die casting, holes are usually cored so near size that only reaming is required. As against this, drilling or boring and reaming are necessary on the sand casting, perhaps with separate jigs for both operations. Again, holes that require tapping are usually cored to tapping size in the die casting, or the thread itself can be cast. In the sand casting, holes must be drilled as well as tapped. In machining operations, such as facing of bosses or flanges, tooling is likely to be more expensive for the sand casting, if for no other reason than that heavier cuts are required. When changes in design are necessary after die-casting dies or sand-casting patterns are made, the latter usually can be altered with less expense than for a casting die.

Die costs are commonly distributed and amortized by dividing these costs by the number of castings that are quite certain to be required. Pattern costs should be distributed and amortized in the same manner. If the saving per piece including machining in both cases, multiplied by the number of pieces figured, equals or exceeds the difference between the die cost and the cost of pattern, core box, and match plate, it may be well to invest in the die.[1]

---

[1] One reason is that, once the die is amortized, any savings which the use

Production Rates.—These are generally much higher for the die casting than for the sand casting, providing the comparison is made between the number of cycles per hour. Of course, if production from a match plate having many impressions is compared with that from a die having one or very few cavities, the two may be equal or even favor the sand casting. Fifty cycles an hour is about the lowest rate for die castings, even in large sizes, and it runs up to 1,000 cycles an hour for some medium to small die castings, the average probably being between 200 and 300 an hour. This is equal to or greater than the average number of molds made *per day* on a molding machine, hence the die-casting machine runs on an average eight or more times faster than the molding machine. With the latter, there must also be considered the added time and labor for casting and for breaking up molds and sand handling not required in die casting. Removal of fins, gates, and sprues is involved in both processes but is likely to be much more rapid in the die casting.

Cost of Material.—Material costs, especially on a basis of equal volume, are quite sure to favor the gray-iron sand casting, as the iron used costs around 1½ cents per pound in pigs and costs for sand and fuel are not high. As against this, zinc-alloy ingot averaged around 8¼ cents per pound for several years,[1] with no sand to consider, and fuel costs are low. If, however, the die casting can be made much lighter than the sand casting and still perform the same function as well or better, the advantage of lower material cost for the sand casting is reduced or perhaps even eliminated.

Cost per pound of castings, as distinct from pigs or ingots, varies widely with the size, shape, coring, and quantity required. For rough approximations, however, one large user of both types figures 5 to 10 cents per pound for gray-iron sand castings (not machined) and about 10 to 25 cents per pound for unfinished zinc alloy die castings.

Machining Costs.—These have been mentioned and clearly favor the die casting, as there is less metal to be removed and dimensions are held within closer limits. Moreover, the advantages of a die gives are continued if additional castings are required. With sand castings, a new mold has to be made for every casting or gate of castings produced.

---

[1] Prior to 1942.

tages of coring either reduces the machining of openings or eliminates such machining. If the part must be polished, either for plating or other finishing, the much smoother die casting reduces the cost of grinding, polishing, and buffing. Flanges against which gaskets fit can sometimes be used without machining the face of the die casting, whereas a similar sand casting would be too rough and require facing. Die castings do not have sand inclusions, the presence of which in sand castings often dulls tools.

Finishing Costs.—The cost of finishing is usually higher for the sand casting where plating is required, as this necessitates grinding, polishing, and buffing to obtain a smooth surface. If smoothness is not a consideration (as for hidden parts) finishing costs may be the same. Except for parting lines, many die castings require only buffing, and those which need grinding and/or polishing require less labor for this than do sand castings. Iron sand castings are subject to red rust if not painted. Zinc alloys tarnish and sometimes show white oxide if used where moisture accumulates, and similar effects are seen on aluminum and magnesium die castings. Nevertheless, both zinc and aluminum types are extensively used without any applied finish and yet remain in acceptable condition in most exposures.

Fastenings and Inserts.—Self-fastenings and inserts constitute fairly important factors favoring economy in the die casting and having no real counterpart in the gray-iron sand casting. Although integrally cast fastenings may increase casting costs slightly, the economy realized in assembly more than offsets this. Projections, solid or hollow, are formed on the die casting and, at assembly, are headed or spun over for fastening the casting to another part, eliminating screws, bolts, and rivets and the cost of supplying and handling them. Inserts cast into die casting such as bushings, anchored pins, or hardened portions usually have properties not afforded by the casting itself.

Strength and Ductility.—These properties are often important and favor the die casting, as Table I shows. Tensile strength is seldom of much practical importance as neither type of casting is used, as a rule, in tension. Compressive and transverse strength are more important, and impact strength perhaps in a still greater degree. Impact strength is high, for a cast material, in zinc-alloy die castings and still higher in brass die castings.

It is materially lower in aluminum and magnesium die castings but still is higher, in general, than in gray cast iron. In respect to ductility, the zinc alloys and the brasses rank high (as cast materials run) whereas gray-iron castings are low.

Hardness.—Hardness is best compared by reference to Table I and is higher even for well-annealed cast iron than for most die-cast alloys. Hardness is an advantage in respect to wear resistance but, at least in combination with some other properties, may increase machining difficulties. Rigidity, which is a desirable characteristic of cast iron, is an advantage in many machine and similar parts. It is obtained in about the same degree in some of the die-casting alloys. Some die-casting alloys are subject to cold flow (permanent set under load) at room temperatures, for which effect allowance must be made in designing parts in which this property is significant. Some cold flow also occurs in cast iron.

Effect of Temperature.—Temperature effects are not often a factor of importance as between sand-cast and die-cast parts, but sometimes they are significant. Zinc alloys are not recommended for prolonged use at temperatures above 250°F., and their impact strength falls off rapidly at temperatures below normal room temperatures. Despite this, die castings are used in large quantities in automobiles and trucks, which are subjected to low temperatures and rarely fail in service. Those exposed to quite high temperatures under the hood also give many years of trouble-free service. Aluminum and brass die castings withstand even higher temperatures than the zinc type. Cast iron can be used at still higher temperatures without adverse effects of importance.

Appearance.—This usually favors the die casting on the score of smoothness, color, somewhat lesser effects of ordinary corrosion, and fine detail with sharp corners, when required. The last two are especially important where trade-marks, lettering, and the like have to be cast in, or where, as in automobile radiator grilles, square edges of grille bars must provide sharp lines not attained in sand castings or even in stamped parts.

The accompanying actual case histories are based on parts that are or have been in actual production in die-cast and/or sand-cast form. Those not produced by both methods have been carefully figured for both types of production and one type selected for reasons given. Actual data in the examples given support the foregoing conclusions as a whole and in nearly every respect. The examples are instructive, as they constitute concrete evidence from a wide variety of applications.

The paint-tank cover shown in Fig. 1, is subjected to air pressure. It has been produced in both die-cast and sand-cast form. Cost figures given here are based on lots of 10,000. Die castings were in zinc alloy and were produced in a single-cavity die which, with tools for fin removal, cost $400. The price per piece was 28 cents and was based on a production rate of 100 per hour. Machining cost 3 cents per piece. For the sand casting, the pattern and match plate used in molding cost $75 and was made in 2 weeks, whereas the casting die required 8 weeks to produce. The piece price for sand castings (from a two-impression match plate) is 17 cents, but machining costs 10 cents per piece. Painting costs were 3 cents per piece for both die casting and sand casting. Advantages that are cited in favor of the die casting are: less machining, better valve seats, and fewer screw-machine parts. Although the sand casting weighs 2 lb. 8 oz., which is one third more than the die casting, the sand casting is now being used. The reason given is that the die casting (the average section thickness of which is about 20 per cent thinner than that of the sand casting and which appears to have been designed with inadequate stiffness) gave trouble from leakage around the seat because it bent or warped

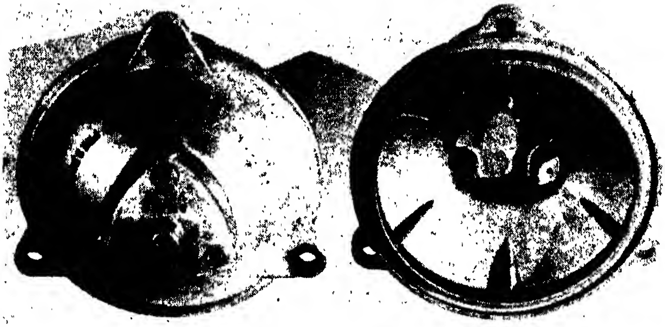

Fig. 1. -This tank cover has been produced in both sand-cast and die-cast form but sand casting is preferred, despite extra machining needed, because it proved stiffer and gave less trouble from leakage.

under the air pressure applied in service. The extra screw-machine parts evidently increased the cost of the sand-cast assembly, but specific data as to how much the cost was increased are lacking.

A barrel plug with 2 in.-pipe thread (Fig. 2), has been produced in both sand-cast and die-cast form. The die-casting die has six cavities, required 4 weeks to build, and cost $865 plus $74 for fin-removal tools. Cast thread necessitates a die parting along the length of the piece. Die castings in zinc alloy weigh about 5¼ oz., are produced 5,000 in 8 hr. at a price of 3½ cents each.

Fig. 2.—Barrel plug that cost less in die cast than in sand-cast form partly because thread is die cast and less machining is needed. Cast-iron plug required plating for some uses but zinc-alloy die casting did not, as it is not subject to red rust.

Match plate for gray-iron sand castings has six impressions, cost $150, and required 6 days to make. Seven hundred sand castings, without thread, weighing 7 oz. each, are produced in 8 hr. at a cost of 3 cents each. Machining costs 3½ cents per piece, about 1 oz. being removed. Die castings do not rust, and they do not require cadmium plating when used in barrels containing alcohol.

In producing cylinder ridge reamer body castings (Fig. 3), in die-cast form, a zinc alloy was used. Die cost was $250. The castings have three radial arms, which are slotted, the slots having the same width as splines in hub portions. The projecting splines in the hole of the smaller casting mate with corresponding spline recesses in the hub of the larger piece, which has an o.d. of 2½ in. over ends of arms and a height of 2 in., the hub being 1 in. o.d. necked to ⅝ in. o.d. to fit the hole in the smaller part. These castings cost 12 cents per pair in lots of 2,000, and the only machining needed is the tapping of the central hole in the larger piece at a cost of 3/10 cent per piece. It has been estimated that sand castings could be produced at about 3 cents per pair from a match plate costing about $100, but they would require so much machining to realize the close fits attained without machining in the die casting that sand castings are not considered feasible.

FIG. 3.—Although these parts for a reamer body could be sand cast, the cost for machining is so much greater than for the die casting that parts have been produced only in die-cast form.

The bunsen-burner base shown in Fig. 4 is $3\frac{1}{4}$ in. in o.d. and the height is $2\frac{3}{8}$ in. It was originally a gray-iron sand casting made from patterns costing \$50. Sand castings cost 12 cents each and machine work was 10 cents per piece additional. Part is now die cast in zinc alloy in a single-cavity die, which cost \$250. The piece price is $6\frac{1}{2}$ cents in lots of 2,000; no machining is required. The fine thread on the projection is cast on. Die castings are finished in gray gunmetal lacquer; sand castings are finished in black japan.

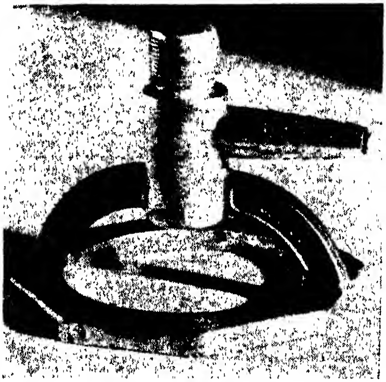

FIG. 4.—This zinc-alloy die casting costs less than one-third as much as the equivalent gray-iron sand casting, as latter required machining and die casting does not, even the thread being produced by the die.

Simple castings (Fig. 5) having D-shaped recessed ends and tubular extensions have been produced in both die-cast and sand-cast form and, although not exact duplicates, serve the same purpose, acting as brackets for supporting the vertical tube, or post, of a washing machine and attaching same to the tub. In the sand casting the tubular portion is somewhat longer than in the die casting. The die casting weighs about half as much as the sand casting. Some machine work was required on both, but the lower cost of material in the sand casting effected a net saving of 40 per cent in the total material and direct labor costs. This cost advantage resulted in selection of the sand casting.

FIG. 5.—The die casting, *left*, weighs about half as much as the sand casting, *right*, but the latter costs about 40 per cent less and serves the same purpose. Both have been used to support washing-machine wringer posts.

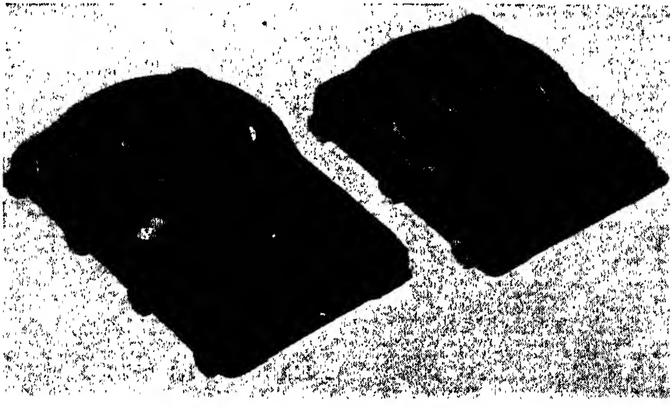

FIG. 6.—Sand-cast part at left has some advantages and some disadvantages as compared with die casting at right, but latter is used because, in machined form, it costs less than half as much as the machined sand casting.

For a compound rest swivel for lathes (Fig. 6), both sand castings and die castings have been used. They are not identical but are similar and perform the same function. Sand castings are in semisteel-gray iron molded from a four-impression match plate, which cost $75 and took 2 weeks to make. Thirty pieces are cast per hour, and cost 15 cents each. Machining costs 59 cents and lacquering (including cleaning) 3 cents per piece, or a total of 77 cents per finished piece. The sand castings weigh 3 lb. before and 2 lb. 7 oz. after machining. The sand casting permits a precision-ground finish on the beveled surface to take graduations and also permits a wedge-type compound clamping means for which the die casting is a little too soft.

Die castings in A.S.T.M. 25 zinc alloy are produced at the rate 250 per hour in a single-cavity die, which cost $450, including fin-removing tools. Castings weigh 1 lb. 8 oz. and cost 27 cents each. Machining costs 6.5 cents per piece and lacquering 1 cent per piece, making the total cost per piece 34½ cents. The saving of 42½ cents per piece would more than amortize the cost of the die over that of the match plate for 1,000 parts, figured for each type of casting. Other advantages named for the die casting are savings in labor and equipment. Graduations, as can be seen in the illustration, on the die casting are raised, being cast on the piece, a procedure not ordinarily feasible in the sand casting.

The washing-machine housing illustrated in Fig. 7 is the largest casting on which comparative data have been secured. Initially it was designed for casting in gray iron, but high machining costs resulted in a shift to the housing die cast in zinc alloy shown at the top of illustration, before production in large quantities was attained. This die-cast housing was used for several years, after which efforts to reduce costs led to the experimental design of cast-iron case shown in the center of the illustration. The iron casting weighed 15 lb. as against 11 lb. for the die casting and required a separate stamped saddle to support the electric motor and separate brackets for attaching the casting to the skirt of the washing machine. Despite these extra parts, which are integral with the die casting (the U-shaped steel stampings that straddle the motor bearings and support the motor being cast in place), the sand casting promised, in careful estimates, to effect a net saving of about 20 per cent. The sand casting required four extra machines in the production line for drilling holes that are cored in the die casting, however, and necessitated the use of a large grinding wheel for facing the bottom surface, to make a tight-fighting gasket for the stamped cover. As against this, the die castings were furnished with the bottom face sufficiently smooth and true to make no machining by the purchaser necessary on this face.

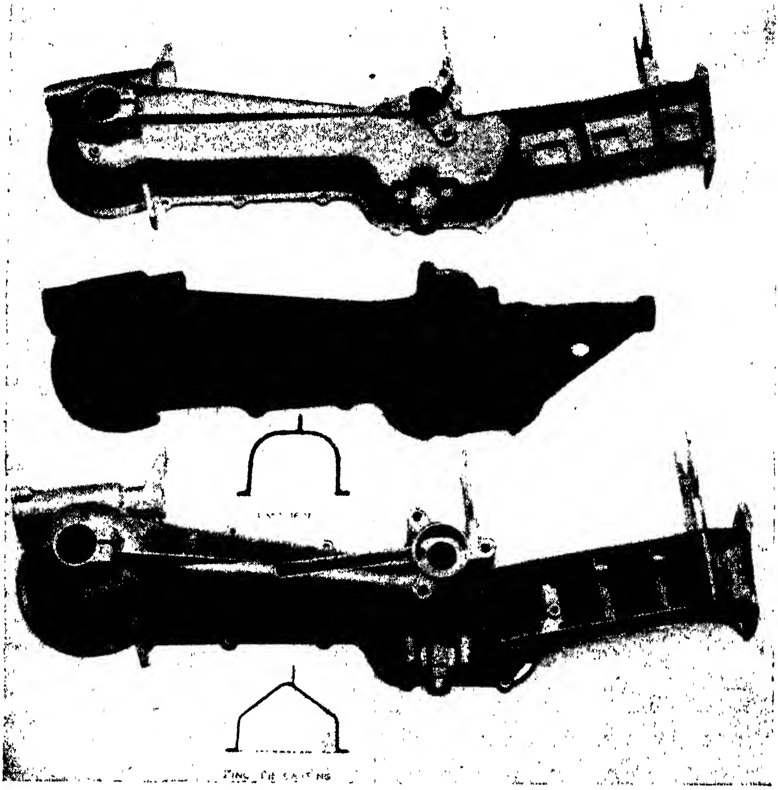

FIG. 7.—Die-cast and sand-cast washing-machine gear housings. The forms produced in a die have been manufactured in large quantities and used in preference to the sand-cast type, largely because of savings in machine work and because sand casting did not include some parts included in the die casting.

Having established this estimated saving in cost for the sand casting, it was decided to determine whether, by suitable redesign, an equal saving could not be effected in a die casting. The result was the die casting shown at the bottom of the illustration. It weighs 8 lb. 9 oz. but represents no sacrifice in strength or in rigidity as compared with the sand-cast case, a typical section of which is shown, or as compared with the first die casting. As with the latter, it includes the cast-in stamped steel supports for the electric motor and integral lugs for attachment to the skirt of the washing machine. A sectional view shows the thinner material in the die casting as compared with the sand casting. By using this triangular section, considerable material is saved and strength and stiffness are increased to parity with that of the sand casting.

TABLE III.—COST AND PRODUCTION DATA

Type of part	Part A		Part B	
	Sand cast	Die cast	Sand cast	Die cast
Material **Estimated, *Used...	**Gray cast iron	*Zinc alloy A.S.T.M. 23	**Gray cast iron	*Zinc alloy A.S.T.M. 23
Total tooling cost.....	$324[a]	$355[b]	$214[a]	$230[b]
Approximate number required per year...	500	500	4,800	4,800
Type of applied finish.	Black enamel	Black enamel	Black enamel	Black enamel
Approximate cost of required machining.	$0.349	$0.019	$0.102	None
Total cost per piece, including machining and applied finish when used	$0.538	$0.244	$0.387	$0.107
Weight of casting, oz..	31.2	29.7	8.3	6.8
Advantages gained by using:	Die casting lower in cost, better in appearance, and requires less machining, also lighter in weight.		Die casting lower in cost, better in appearance, and requires less machining, also lighter in weight.	

[a] Includes pattern, match plate, and any jigs required for machining.
[b] Includes die, fin-removal tools, and any jigs required for machining.

With the latest die casting, there is a considerable saving in machine work as compared with the sand casting, and the investment in extra machines is avoided. As a net result, the saving of the new die casting over the old is nearly the same as that estimated for the sand casting. Advantages gained by the new die casting as compared with the sand casting include: lighter weight; fewer parts to stock, handle, and assemble; smoother castings, which are better in appearance; and a machining line with fewer machines.

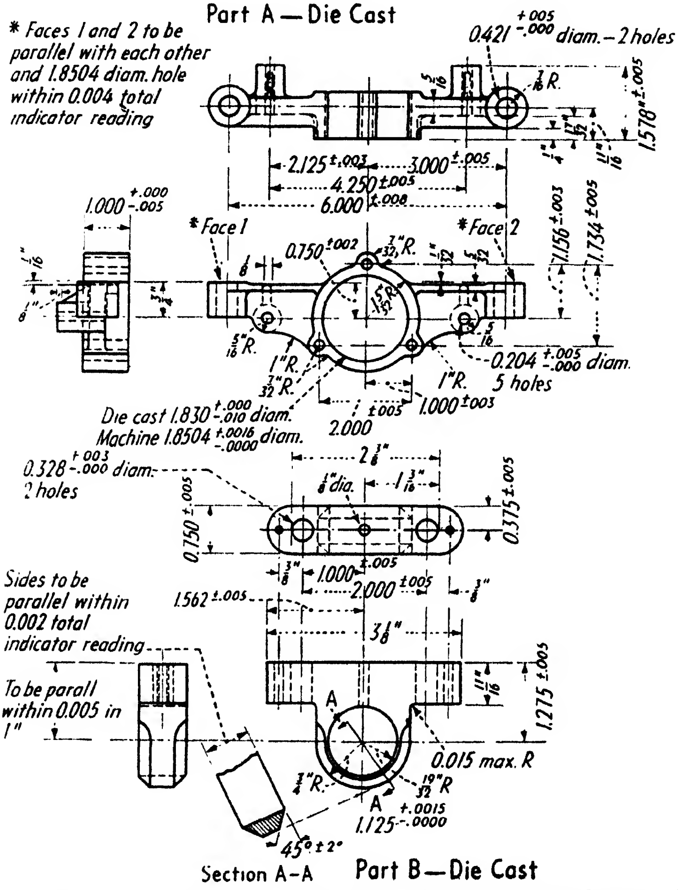

FIG. 8.—Both these parts were designed for production in sand-cast and in lower in cost, an analysis of

Business-machine parts (Fig. 8) were designed both for casting in gray iron and for die casting in zinc alloy and actual estimates of costs in both forms were secured. The corresponding parts are not exact duplicates, but each is designed to gain minimum production cost for the respective method of production and still meet service requirements. The result is the use of somewhat thinner sections for the die casting in the two instances, but other significant dimensions are the same, so that the parts could have been used interchangeably if produced both in sand-cast and in die-cast form, after such machining as is needed is done.

Part A — Sand Cast

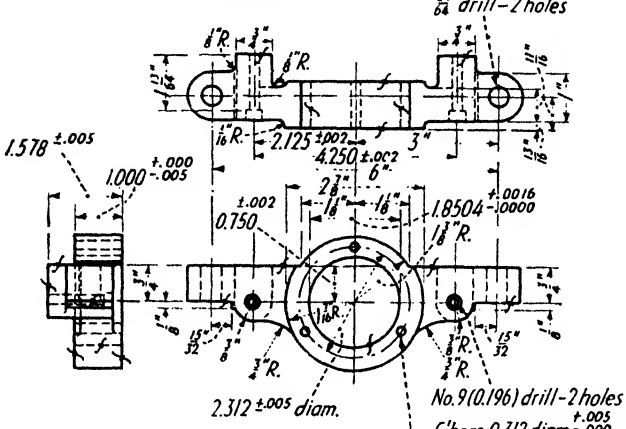

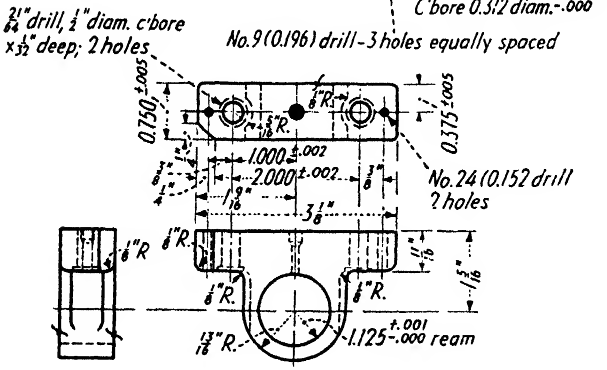

Part B — Sand Cast

die-cast form, but the latter type of casting was chosen largely because it is which is given in Table III.

For both parts the die casting was selected, primarily because of the lower piece cost, but at the same time the die castings yield better appearance and machining costs are lowered. Table III shows relative costs, both for tooling and per piece. Cost figures include a coat of black enamel for both the sand-cast and the die-cast parts, hence this item does not account for the total cost differences shown in the table.

CHAPTER X

PERMANENT-MOLD AND DIE CASTINGS COMPARED[1]

BY HERBERT CHASE

When making a choice between permanent-mold castings and die castings, a great many factors have to be considered, and any one of them may have a controlling effect upon which is selected. Much the same may be said of the choice between any two types of metal products that can be used alternatively, but the factors that control the choice between die castings and permanent-mold castings naturally differ to some extent from those involved in comparing other types of product.

Permanent-mold castings, as here considered, are of the type made in permanent metal molds usually produced from alloy cast iron, the metal being ladled into the mold under a gravity head and without the application of other pressure. In England, such castings are sometimes referred to as "die castings," as distinct from "pressure die castings," but in this country the term "die casting" is reserved for the type produced under pressure in machines termed "die-casting machines." The pressures applied commonly range from about 400 psi upward to several thousand psi. In most cases, no ladling of metal is involved, but in the cold-chamber type of die-casting machine, which is gaining in use for aluminum, magnesium, and copper-base alloys, the molten metal is ladled into the machine by hand and then immediately subjected to very high positive pressures by a plunger that forces it into the die. The products of such machines are sometimes referred to as "pressure castings," but they are, of course, a form of die casting.

So called "semipermanent-mold" castings are considered here as one form of the permanent-mold type, as the molds themselves are of the same character. In such castings, however, sand cores are employed and, as a new core is required for each casting, a portion of the mold, that is, the core, is not permanent. Hence the term "semipermanent" is applied to the casting assembly

---

[1] Reprinted by permission from *Metals and Alloys.*

as a whole and to the product it turns out. Except for the core and its separate production, the process of making semipermanent-mold castings is the same as that for the permanent-mold type, but, as the core is of sand, it has the characteristics of sand cores and is subject to their dimensional limitations or inaccuracies. The use of sand cores, however, is commonly limited to those which involve undercuts or to some shape which is not commercially feasible to produce or to withdraw from the casting if the core were made from metal. Many cores made from metal also are used in making permanent-mold castings. Although their application involves certain limitations not always applying to the die casting, their utility is considerable. They are used much more often than sand cores and the permanent-mold casting is more widely employed than the semipermanent-mold type.

Although many permanent-mold castings having a ferrous base are produced, attention here is confined to the nonferrous type, both for simplicity's sake and because the comparison is with nonferrous die castings. Also omitted from this discussion are slush castings (a special form of permanent-mold castings), since the inclusion of this form would complicate the comparison.

Choice of Alloy.—Among the basic and highly important considerations entering into a choice between permanent-mold and die castings is, naturally, that of the alloy to be used. In die castings, the modern zinc alloys are employed for about three-fourths of the total output because they cast so readily with relatively close dimensional tolerances, have excellent physical and mechanical properties, are low in cost, yield a remarkably smooth surface, and are readily adapted to plating. But the zinc alloys for die castings are not well suited for use in permanent molds and those zinc alloys which are suited, as far as casting is concerned, are greatly inferior in strength to those so justly popular in die casting.

Aluminum alloys rank first in importance in permanent-mold casting but are second to the zinc alloys in extent of use in die casting. Certain of the aluminum alloys can be used either for die casting or for permanent-mold casting. Some, in the latter forms (unless subsequently heat-treated), have, in test bars, a somewhat lower tensile strength than when die cast. In practice, however, this difference may be offset by porosity in the die

TABLE I.—COMPOSITION AND PROPERTIES OF DIE-

Typical alloys				Approximate chemical composition, per cent									
A.S.T.M. designation		S.A.E. alloy No.	For aluminum alloys Aluminum Co of America alloy No.; for zinc alloys, New Jersey Zinc Co. alloy No.	Copper	Silicon	Aluminum	Magnesium	Zinc[a]	Nickel	Cadmium	Lead	Tin	Iron
Spec. No.	Alloy												
													Zinc die-
B86-38T	XXIII	903	Zamak 3	0 1 max.	.	4 1	0 04	Rem.	.	0.005 max.	0.007 max.	0 005 max.	0 1 max.
B86-38T	XXI	921	Zamak 2	3 0	..	4 1	0 03	Rem.	.	0 005 max.	0 007 max.	0 005 max.	0 1 max.
B86-38T	XXV	925	Zamak 5	1 0		4.1	0.03	Rem.	.	0 005 max.	0 007 max.	0 002 max.	0.1 max.
													Copper die-
				65 81 5	1 0 4 0	....	.. .	34 14 5	. ..	..	.. .	..	
													Copper permanent-
		68	McGill Metal	89		9		...	.	....	....	.	2
													Aluminum permanent-
B108-38T	9A	35	43		5 0	Rem.	.	..	...	....	....	....	.
B108-38T	3	..	A108	4 5	5 5	“	.	.	..	....	....	....	.
..	.	33	112	7 5		“	.	2 0	..	...	....	....	1 2
	...	.	B113	7 0	1 7	“	.	..	..	...	....	....	1 2
B108-38T	2	.	C113	7 0	4 0	“	..	2 0	.	....	....	....	1 2
......	...	34	122-T52	10 0.		“	0 2	...	.	....	....	....	1.2
B108-38T	6	...	A132-T4	0 8	12 0	“	1 0		2 5	....	....	....	0 8
B108-38T	6	...	A132-T551	0 8	12.0	“	1 0	.	2.5	....	....	....	0 8
B108-38T	5	...	138	10.0	4 0	“	0 2	...	...	....	....	....	1.4
......	.	39	142	4 0	.	“	1 5	...	2 0	....	....	....	.
B108-38T	11	39	142-T61	4 0	.	“	1.5	....	2.0	....	....	....	...
B108-38T	11	39	142-T571	4.0	..	“	1.5	...	2 0	....	....	....	...
B108-38T	1	...	B195-T4	4 5	3 0	“	...	....	...	....	....	....	...
....	....	..	B195-T6	4.5	3.0	“	...	..	...	....	....	....	...
....	...		A214	.	.	“	3 8	1 8	...	....	....	....	..
......	....	322	355-T4	1 3	5 0	“	0 5	....	...	....	....	....	...
......	....	322	355-T6	1 3	5.0	“	0 5	....	...	....	....	....	...
													Aluminum die-
B85-39T	V	305	13	....	12.0	Rem.	...	....	...	....	....	....	..
B85-39T	IV	304	43	...	5 0	“	....	....	...	....	....	....	...
B85-39T	XII	312	81	7.0	3 0	“	....	....	...	....	....	....	...
B85-39T	VI	...	83	2.0	3.0	“	....	....	...	....	....	....	...
B85-39T	VII	307	85	4 0	5.0	“	...	....	...	....	....	....	...
....	.....	...	218	..	..	“	8.0	....	...	....	....	....	...

---

[a] In the case of zinc die-casting alloys, only high purity (99.99+ per cent) zinc may be used.

[b] An A rating is highest. Rating compares the stability of all aluminum-base alloys as a group and is based on results of standard salt-spray tests. The ratings are as between aluminum alloys, among themselves, *not* as between aluminum alloys and those of other base metals.

[c] Yield strength is the stress at which the material xhibits a permanent set of 0.2 per cent.

[d] Mechanical properties are obtained on A.S.T.M. specimens Since minimum guaranteed values vary with the commodity, these values are not given.

CASTING AND PERMANENT-MOLD—CASTING ALLOYS

Condition	Approximate specific gravity, grams per cu. cm.	Approximate weight, lb. per cu. in.	Relative resistance to salt water[b] (*A* = highest rating)	Strength in tension[d]			Strength in compression[d]		Impact strength	Brinell hardness
				Ultimate tensile strength, 1,000 psi	Yield strength,[c] 1,000 psi	Elongation, % in 2 in. Rod specimen (½ in. diameter)	Yield strength in compression, 1,000 psi	Shear strength[e] 1,000 psi	Charpy ft.-lb. ¼ by ¼-in. bar, 40-mm. span	
casting alloys										
As cast	6 6	0.24		40	[f]	5[g]	60[h]	31	20	80
As cast	6 7	0.24		48	[f]	5[g]	93[h]	46	20	90
As cast	6.7	0.24		45	[f]	3[g]	87[h]	38	20	85
casting alloys										
As cast	8.5	0.308		65	35	25		.	.	120
As cast	8 2	0 297		85	50	8				170
mold casting alloys										
As cast	7.5	0 27		75	35	15		.	25[i]	180
mold casting alloys										
As cast	2.68	0 097	*B*	24	9	6 0	9	18 0		
As cast	2.77	0 100	*D*	28	16	2 0	16	25.0		
As cast	.	0 104	*D*	27	19	1 5	19	23 0		
As cast	2.86	0 103	*D*	28	19	2 0	19	23 0		
As cast	2.86	0 103	*D*	30	24	1 0	24	22.0		
H.T. and aged	....	0 104	*D*	35	31	0 5	31	25 0		
H.T. and aged	...	0 097	*C*	38	30	1.5	30	29.0		
H.T. and aged	....	0 097	*C*	36	28	0.5	30	24.0		
As cast	....	0.105	*D*	28	24	0 5	32	22 0		
As cast	2.77	0 100	*C*	34	24	1 0	26	24.0		
H.T. and aged	....	0 100	*C*	47	42	0 5	46	31 0		
H.T. and aged	....	0 100	*C*	40	34	0 0	34	26 0		
H.T. and aged	....	0.101	*C*	36	22	7 5	22	30.0		
H.T. and aged	...	0 101	*C*	39	33	5 0	33	32.0		
H.T. and aged	2.68	0 096	*B*	27	16	5 0	17	22.0		
As cast	....	0.097	*C*	38	23	6.0	23	29.0		
H.T. and aged	. .	0.096	*C*	43	26	4 0	26	30 0		
casting alloys										
As cast	2 66	0.096	*B*	33	18	1.8[g]			2 0	80
As cast	2.68	0 097	*B*	29	13	3.5[g]	. .	.	4.5	60
As cast	2 85	0.103	*D*	32	24	1.3[g]			1 5	70
As cast	2.75	0.099	*C*	30	14	3 5[g]		.	5.0	60
As cast	2.78	0.101	*C*	35	19	2.7[g]	.	. .	2 5	70
As cast	2.53	0.091	*A*	36	23	5.0[g]			10.0	

---

[e] Shearing strengths are single-shear values obtained from double-shear tests.

[f] The zinc alloys do not have a true yield strength.

[g] The elongation of the zinc and aluminum die-casting alloys was determined on ¼-in. diameter bars.

[h] The compressive values for the zinc alloys are ultimate values. In these tests the specimens assumed a permanent compression of about 30 per cent.

[i] Resistance to shear by impact, Izod.

casting, which, in the permanent-mold type, is less in degree. Certain of the aluminum alloys suited for permanent-mold work can be heat-treated with improvement in physical properties, and the maximum tensile strength attained by these alloys in their heat-treated form is greater than that in any of the standard aluminum die-casting alloys. Although certain aluminum alloys that could be die cast might have their physical properties improved by a heat-treatment similar to that applied to permanent-mold aluminum alloys, such treatment is not usually feasible because blistering is likely to result. It is doubtful if porosity can be eliminated either in die castings (even in those made in cold-chamber machines) or in permanent-mold castings, but one maker of both types (in aluminum alloys) states that, to date, the permanent-mold type has consistently the better physical properties. Reference to Table I will show the relative properties insofar as comparative figures have been made available by those who produce the respective types of castings. If properties other than tensile strength are compared, impact strength, for example, the order of merit naturally varies.

Secondary aluminum[1] is widely used in preparing alloys for both permanent-mold and die-casting purposes but, according to one maker of permanent-mold castings, a cheaper grade can often be used for the permanent-mold type. If virgin metals are used, material costs are about on a par, since compositions are similar, but when, as in some cases, the die casting can be made in thinner sections and still serve the same purpose, this saves somewhat in metal costs. In both types of castings scrap losses are low, as gates, flash, and rejects are remelted with only minor losses in metal.

Some copper-base alloys are successfully cast in permanent molds and rank next to aluminum in commercial importance in this field, just as they do[2] in die casting, although in the former the two are first and second, in extent of use, whereas, in die casting, they rank second and third,[2] respectively. Magnesium

---

[1] As this is written, quotations on secondary aluminum happen to be higher than for virgin aluminum. This is the reverse of the usual conditions, to which the statements here apply.

[2] Precise data on extent of use are lacking, but recent increases in the extent of use of magnesium alloys for die casting may make them rank third and brass die castings fourth.

alloys are gaining rapidly in die casting, especially where minimum weight is desired, but are only a minor factor as yet in the permanent-mold field, although some permanent-mold magnesium castings have been produced and plans for their production in large quantities are reported under consideration.

Several of the producers of permanent-mold castings also have departments in which die castings are turned out. There is some degree of competition between the two types of castings, but it is chiefly between castings in alloys of the same base metal. Thus, die castings in aluminum alloy are chiefly competitive with permanent-mold castings in the same or some similar alloy based on aluminum. There is considerable competition between zinc-alloy die castings on the one hand and aluminum-alloy permanent-mold castings on the other, especially where quantities are small, as in such cases the lower cost of the permanent mold may outweigh the lower production rate of the latter. A few types of parts have been made in both forms, but some one or more factors, including cost considerations, are likely to dictate the use of one or the other form of casting for reasons now to be outlined.

Die Cost.—Dies for producing die castings are commonly made from steel. The cavities are cut or hobbed from the solid metal, and, except for zinc alloys (and even sometimes for them) and those of lower melting point, the dies require hardening to secure adequate die life. After hardening, the cavities are usually highly polished, especially where a corresponding polish is required on the castings. The cost of making these dies is lower than it once was, because of improved tools and machining methods, but often represents a large investment to be charged off (for good economy) or prorated over the total number of castings known to be required. Often multiple cavities (which may be duplicates or all different) are used with added economy. The dies are always used in a machine adapted for rapid opening and closing them and for securely locking the dies when the metal is injected.

As against this, the permanent mold is usually cast (perhaps except for cores, which may be of wrought metal) in alloy iron having good heat-resisting qualities. The cavity or cavities are commonly cast also, but with due allowance for accurate machining, as well as for a wash, or paint, of refractory material, which is applied before castings are made and usually daily thereafter when the die is in use. This wash helps to protect the metal against checking and erosion and, although affording a smooth surface, is never so smooth as a well-polished surface of a die-casting die. Consequently the die does not produce castings quite so smooth as good die castings, although permanent-mold castings are much better in respect to surface smoothness than sand castings.

Permanent molds cost less than equivalent die-casting dies in the average case, perhaps one-third to one-half as much. Upkeep cost as between dies and molds is reported to be about on a par, and die and mold life is said to be about equal when both die and mold are used for casting the same type of metal. The higher the melting point of the alloy to be cast, the higher is die or mold upkeep and the shorter the life of each. This may be of importance if the choice is, for example, between a die casting in zinc alloy (which has a low melting point and for which dies last almost indefinitely) and a permanent-mold casting in aluminum or in copper-base alloy.

Over-all Cost.—Many factors besides die cost have a bearing on over-all cost, among them being the cost of the metal, the rate of production, upkeep cost on dies or molds and machines, relative ease and amount of machining required, minimum section thickness feasible, and the cost of an applied finish when one is necessary. The lower cost of molds as against dies sometimes favors the permanent-mold casting, especially when quantities are small, but if they are large or if other factors favor the die casting, as they often do, over-all cost may favor the die casting. Only when all factors involved are weighed can over-all cost be determined; hence any generalization in this regard requires too many qualifications to be of much value.

In favor of the permanent-mold casting is the lower cost of the machine (when it can be termed such) in which it is produced. Since the pressures applied are low (gravity head only), relatively low locking pressures are required and often the die parts are merely hinged together and only hand clamps are needed. The die may even be used on a metal table or support, which is hardly to be classed as a "machine." In other cases, especially for large molds, hydraulic or pneumatic sliding and/or locking parts are needed or are justified by the greater speed of operation.

These and related parts involve more of a machine, though one lower in cost than for most die-casting work. Cores are often placed and operated by hand, but sometimes mechanically operated cores and pushouts are needed, much as for die casting.

For the semipermanent-mold type of casting, tooling cost is augmented by the cost of core-making equipment, including the core boxes required, but such cores are avoided unless essential and, when they are required, afford a means for making cores giving internal shapes not feasible in die casting.

Production Rates.—Partly because of the more highly developed machines used for die casting, the rate of production of die castings generally is much greater than for permanent-mold castings. This applies especially to machines equipped for mechanical injection of zinc alloy but may apply also to air-injection machines and to cold-chamber machines for making aluminum-alloy die castings. In cold-chamber machines, the charge is ladled, much as it is in making permanent-mold castings. Thus, an injection type of die-casting machine for zinc alloy makes from 60 up to as many as 1,000 or more shots (die fillings) per hour. The low figure applies to only a few very large die castings, the average probably being 200 to 300 shots an hour. Four hundred to five hundred shots are quite often attained. In aluminum-alloy die casting, rates range from about 40 up to about 110 shots an hour or possibly slightly higher. As against this, the production of permanent-mold castings does not often exceed 75 die fillings an hour, with 50 large castings an hour per machine unusually good. One maker considers 25 washing-machine agitators an hour as a good rate. Another says that 50 an hour is a top figure, and a third says 550 a day can be turned out by an operator who runs two molds simultaneously. Automobile pistons, which are large-quantity items, though requiring special metal-core work, are made at about 45 to 65 an hour (perhaps slightly faster under some conditions) in permanent molds. One maker reports 1,000 small permanent-mold castings in aluminum alloy per 8-hour day, or as many as 800 per mold per day. The use of sand cores slows the casting cycle, beside requiring much labor in producing the cores. Without question, the die-casting cycle averages much shorter than that for permanent-mold castings, even for castings of the same size and weight.

One of the two direct comparisons the author has been able to secure concerns a vacuum cleaner fan case that was first produced in a semipermanent mold, using an aluminum alloy, at the rate of 60 castings an hour. This casting weighed 1.48 lb. Later, a similar casting for the same purpose was made in a cold-chamber die-casting machine at the rate of 100 an hour, which, presumably, allows for inserting in the die one or more loose pieces and removing them from each casting after the latter is taken from the die, if the core is shaped the same as that for the semipermanent mold. The die casting weighed 1.10 lb., or about 25 per cent less than the permanent-mold casting, indicating that a thinner section was used. In the only other direct comparison made available, a typewriter part, illustrated in Fig. 1, is produced in both permanent-mold and die-cast form. No production rates are given but, presumably because of savings in machine work, the die casting is 3½ per cent lower in cost, in finished form, than the permanent-mold casting. Both parts are in aluminum alloy.

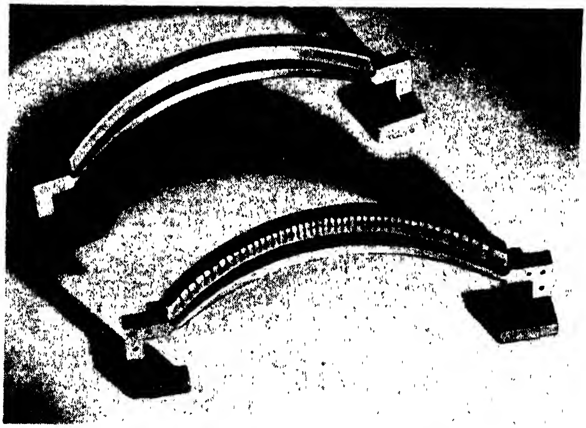

Fig. 1.—Typewriter part that has been produced as a die casting (as shown in unmachined form) and also as a permanent-mold casting (as shown with slots and some other machining done). Both parts are in aluminum alloy. It was anticipated that the die casting would result in considerable saving, especially in machine work, but it developed that the slots could not be cored, that only 4 of 18 holes could be cored, and that some flat surfaces, which had to be machined on the permanent-mold casting also had to be cleaned off in the die casting. As a result, the saving on the latter amounted to only 3½ per cent. Both types of castings are being continued so as to have two sources of supply.

Finishing Costs.—Data made available to the author concerning finishing costs are less specific than could be desired, but such costs are likely to favor the die casting, partly because closer dimensional limits and smoother surfaces are readily attainable, so that less metal need be cut away and less polishing will usually be needed on the die casting. Flash on the die casting is likely to be lighter and easier to remove. This applies in particular to the zinc-alloy die casting over the permanent-mold aluminum-alloy type, but the latter is surely no easier to machine than the aluminum die casting of the same or similar composition. In respect to applied finishes, any advantages

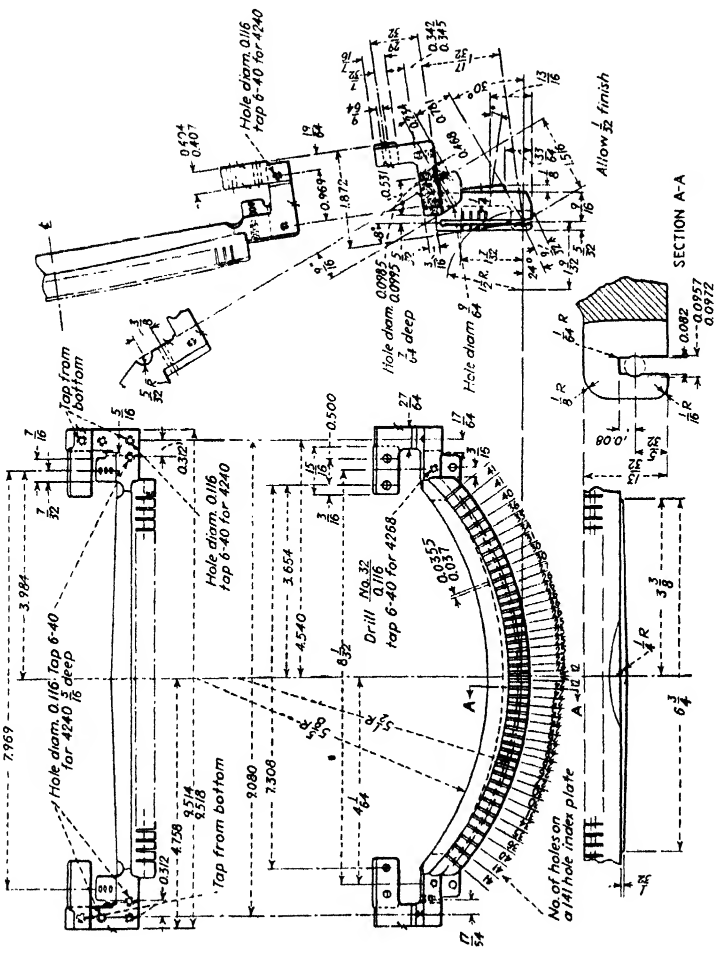

FIG. 2.—Drawing of the permanent-mold casting shown in Fig. 1 but indicating the dimensional limits held in the finished piece. Finish marks show the flat surfaces that require machining.

would lie with the die casting, partly because of its smoother surface. If plating is involved, the zinc-alloy die casting ranks as easier to prepare for plating and to plate.

Section Thickness.—Three thirty-second inch is usually named as the minimum wall thickness feasible in permanent-mold die castings in aluminum alloy, although some of 0.080 in. thickness have been made and one producer states that waffle grids are cast successfully in 0.060- to 0.070-in. sections. As against this, $\frac{1}{32}$ in. (0.031 in.) is readily secured in medium- to small-sized die castings in zinc alloy and some almost as thin have been made in aluminum alloy. Quite large zinc-alloy die castings have been made with 0.050 in. average section thickness, whereas nearly twice this or heavier would be needed in a corresponding permanent-mold casting in aluminum alloy. There is thus no question that the die casting can be made with thinner sections, as far as feasibility of casting is concerned. On a strength basis, there may be cases in which the greater tensile strength feasible with permanent-mold castings in *aluminum* alloy in heat-treated form might make it feasible to employ a thinner section than for a corresponding aluminum die casting. Where strength is involved, the greater porosity likely or sometimes occurring in the die casting may have a bearing on the minimum sections which it is feasible to use, as indicated under Porosity. On the other hand, stiffness and even strength often require that the thickness of either type of casting be well above the minimum that it is feasible to cast.

Porosity.—Since die castings are made at high injection pressures, some air is usually trapped in the die casting. This produces pores or voids. Porosity is seldom if ever completely avoided although it can be confined, as a rule, to sections of the casting in which its effects are of little or no significance. Although porosity may not be completely avoided in permanent-mold castings, it probably averages much less in degree than in the die casting, as the permanent-mold casting is fed from a riser and with the metal flowing slowly upward so that air in the cavities is likely to be displaced. A shrink ball, or well, at the top of the riser supplies metal until the casting is fully solidified. For such reasons, the permanent-mold casting usually has an advantage as to soundness. It is usually conceded that castings made at very high pressures in cold-chamber die-casting machines have less porosity than those made in air-injection machines. It is doubtful, however, if any makers either of die castings or of permanent-mold castings can safely guarantee complete freedom from porosity in all castings produced. Porosity in zinc alloy in die castings and similar porosity, as well as absorption of hydrogen in aluminum-alloy die castings, sometimes result in blistering if such castings are heated above a certain temperature, as in heat-treating or some finish baking operations. If the permanent-mold casting has less porosity, this may make it preferable (when the comparison is confined to aluminum alloys), especially in those aluminum alloys which are rendered stronger by heat-treatment.

Weight.—Because of the thinner sections that can be produced in the die casting, such castings frequently can be somewhat lighter than the permanent-mold casting of the same alloy. Magnesium alloys are the lightest available for either type of casting, and the art of making them is farther advanced in die casting than in permanent-mold casting. It can thus be said that, of the two forms of castings, the die casting will be the lighter providing full advantage of weight-reduction possibilities is taken in both instances.

Smoothness and Appearance.—Assuming that the casting is to be used without an applied finish and without scratch brushing, polishing, or the like, the permanent-mold casting sometimes is preferred, as it comes from the mold with a relatively uniform frosted appearance and, in the case of some aluminum alloys, at least, with a lighter color than the corresponding die casting. This, among other items, has caused the permanent-mold casting to be preferred for such parts as the grids for waffle irons. Another item in its favor is the lesser tendency for the waffle to stick to the grid, which is an important consideration for such applications. Actually, however, the die casting is likely to be smoother than the permanent-mold casting and, for this reason, may cost less to finish, especially if plating is required, as the smoother surface needs less polishing and buffing.

Dimensional Accuracy.—That the die casting can be produced within closer dimensional limits than the permanent-mold casting is seldom questioned. Some makers, at least, require +0.010 in. minimum on all dimensions of small permanent-mold castings, as against +0.001 to 0.002 in. *per inch* for die castings, the latter applying to dimensions within solid parts of the die, not across parting lines or as between cores and fixed parts, where mechanical fits of die parts must be considered. A greater draft, 3 deg., is preferred (and required for deep draws) in the permanent mold and $1\frac{1}{2}$ deg. is the minimum for shallow draws for aluminum permanent-mold castings. In some cases, this may be of no moment and in others it may necessitate more machine work on the castings, but the advantage in this respect (as between alloys of the same base metal) favors the die casting, at least in a large proportion of cases.

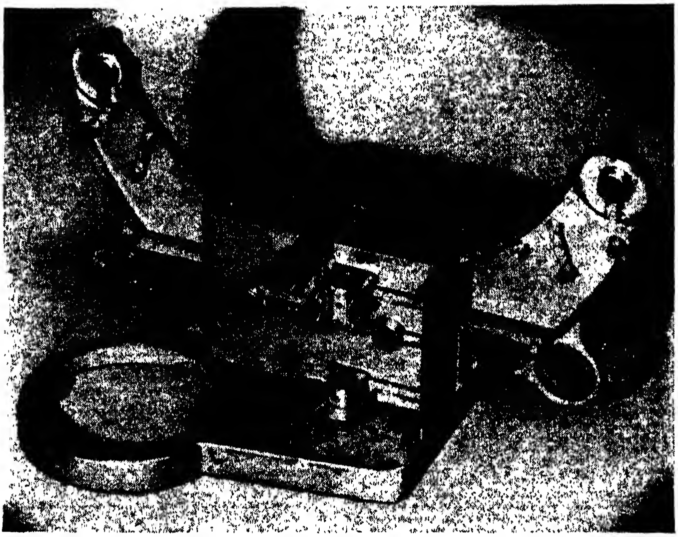

FIG. 3.—Part for a motion-picture projector, typical of many complex die castings in zinc alloy with thinner sections and much more complex coring than are commonly attempted in making permanent-mold castings, regardless of alloy employed.

Coring and Complexity.—Much more complex castings and those with more and closer core work are more feasible in die castings than in those made in permanent molds. The shape of the permanent-mold casting (as here defined) must be such that it will fill out properly under the gravity head, whereas the use of high pressures, along with proper venting, assures the filling out of parts into which the metal would not otherwise flow in the die casting. This is not entirely a question of section thickness but involves such factors as gating and venting, as well as that of applying enough pressure to produce the necessary flow before the metal freezes. Much more complex coring is done in the die casting and smaller cores are feasible, especially in using alloys of low melting point, than are considered feasible in most permanent-mold work. On the other hand, the use of

FIG. 4.—Group of permanent-mold and semipermanent-mold castings typical of those produced in aluminum alloys. Some similar parts have been die cast, usually also in aluminum alloy, chiefly to gain light weight or special forms of corrosion resistance, but the cylinder head and two of the larger parts to the left of it (among others) require sand cores (putting them in the semipermanent-mold classification) and cannot be die cast.

sand cores, as in semipermanent-mold castings, is not feasible in the die casting and permits of interior shapes not duplicated in the die casting.

Size of Castings.—There are no very well-defined limits as to size, either maximum or minimum, beyond which either type of casting cannot be made. In aluminum alloys, permanent-mold castings up to 55 in. maximum dimensions have been made, and fairly intricate castings up to 36 in. long have been produced in considerable quantities. One maker of permanent-mold castings in aluminum alloy indicates that castings up to 50 lb. in weight are feasible and others down to about 1 oz. in weight can be made. Possibly even smaller castings would be feasible. The largest die casting in aluminum alloy yet made, to the author's knowledge, is a crankcase measuring 34 by 10 by 6 in. and weighing 17½ lb. This involved a $6,000 die cost and a larger casting than many die casters would care to undertake. At least one die casting in magnesium alloy measuring 74 in. in length has been produced and many of similar length to have been made in zinc alloy. Die castings weighing only a small fraction of an ounce are entirely feasible in zinc and in aluminum alloys and many such are produced in large quantities. The maximum in weight for zinc-alloy die castings made to date is about 35 lb., but there is little doubt that this weight could be exceeded if demands for heavier castings were sufficient to justify die investments, which average lower than for dies to be used with alloys of higher melting point.

Relative Strength.—General statements as to relative strength require so many qualifications that their value is somewhat doubtful. Some comparisons involving strength have been made above, however, and others, more specific, are given in Table I. Tabular data naturally refer to standard test specimens the properties of which are not, of course, always duplicated in the castings themselves. Where strength is of paramount importance, the possible effects of porosity have to be considered and suitable factors of safety applied, as with other types of castings. Strength comparisons ought not to be based on tensile strength only unless strength in tension is a primary requirement, since impact strength and ductility are often of greater importance. The strength of certain aluminum alloys suitable for permanent-mold castings can be greatly improved by heat-treatment, as already indicated, but the cost of such treatment should not be overlooked if minimum cost is desired. On the other hand, it is feasible to heat-treat permanent-mold castings where similar treatment of die castings is usually ruled out because it is likely to result in blistering. In general, strength is only one of several factors to be weighed in arriving at a choice which combines the greatest number of advantages with a minimum number of disadvantages.

FIG. 5.—Pouring a typical small-sized permanent-mold aluminum-alloy casting, the metal being ladled from the melting pot in the background. In this case, the mold is split vertically and hinged about the pin in the foreground. It is held together by the clamp at the left and, when the casting has solidified, is swung open to permit ejection of the casting.

Conclusion.—In a brief chapter, such as this, it is not feasible, of course, to go into details concerning specific cases, but the foregoing outline of considerations having a bearing on a choice between die castings and permanent-mold castings points out some of the major considerations involved. When the engineer is faced with a choice between one or the other of the types of castings dealt with here and some definite consideration does not bar either form, he may well make designs for both types and secure comparative estimates. Before doing so, however, he may profitably submit tentative designs to reliable makers

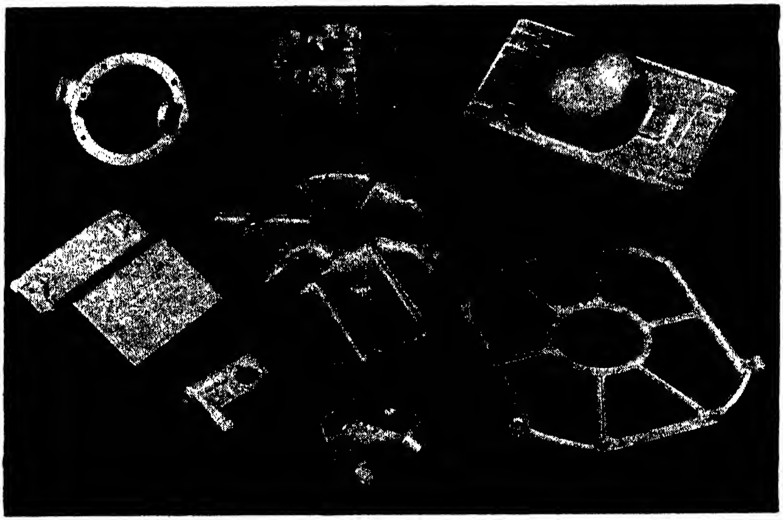

Fig. 6.—Group of die castings in aluminum alloy, fairly typical of many in general production. Some of them could be produced in permanent molds, but not with dimensional tolerances quite so close or with surfaces quite so smooth as those on the die castings. Some of those shown are produced in cold-chamber machines.

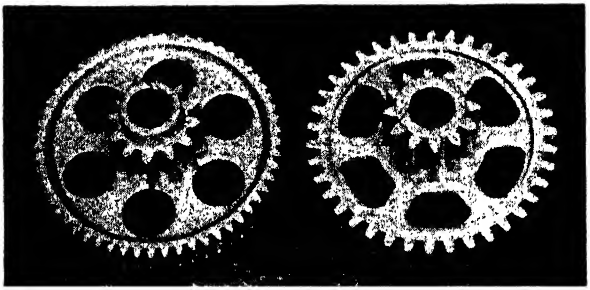

Fig. 7.—These permanent-mold gears, employed in a well-known make of domestic stoker, are cast from aluminum bronze and so close to size that the trim or shaving die, used for finishing the teeth, is said to remove only 0.0005 to 0.0015 in. of metal.

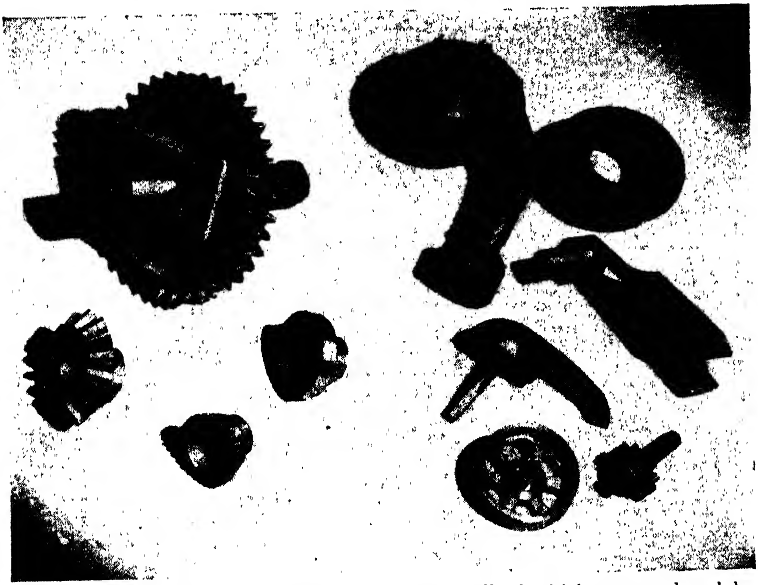

FIG. 8. Two groups of copper-base castings all of which are produced by McGill Manufacturing Company. Those on the left are in No. 1 McGill Metal, which is an aluminum bronze (see Table I), and are made under gravity head in permanent molds. The group at the right are brass die castings produced under heavy hydraulic pressure. Some of each type have steel inserts, and one pair of die castings is shown with the gate or sprue, including the slug of excess metal, still attached.

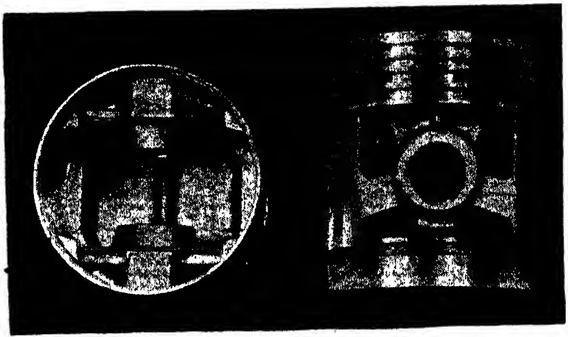

FIG. 9.—Permanent-mold aluminum piston, typical of those produced in vast quantities for many internal-combustion engines. Because the core has to be undercut to form the recesses below the bosses, it is made in three sections, which are removed separately from the casting.

of each type of casting, for constructive criticism. By so doing he can make sure that the designs in their finished forms make the most of economies inherent in each type. Otherwise, he may unwittingly specify types of construction or limits so close that costs are materially higher than they need be.

Figures 1 to 9 give some idea as to types of parts produced in die-cast and permanent-mold forms and captions indicate certain factors influencing the choice. In Table I are given data furnished by makers of castings of each type or by those who supply the alloys and/or the base metals that are employed. Certain other alloys not listed are sometimes used, but those listed are generally regarded as best suited for the purposes indicated.

CHAPTER XI

WHICH TYPE OF NONFERROUS CASTING?[1]

By Herbert Chase

Designers of nonferrous castings usually have to decide, sooner or later, which of various types available they shall choose as best suited to their needs, at least when the castings are of small to medium size. A great deal depends upon such factors as number of castings, cost of the rough casting, cost of machining, cost of tooling, size and shape of casting, type and size of cores, kind of metal, section thickness, tolerances necessary, and facilities available, to mention only a few considerations.

Other chapters in this book give detailed comparisons between die castings and sand castings and between die castings and permanent-mold castings. No mention has been made, however, of castings produced in plaster-of-Paris molds or of castings made by centrifugal means, usually in metal molds. Both of these types have somewhat specialized utility. Though their uses are not widespread, each type has its own peculiar advantages and limitations.

There are, as explained later, good reasons for differentiating among die castings produced in machines of three different types and for comparing these types with other metal-mold castings as well as with castings made in sand molds and in plaster molds. Such comparisons have been made in tables prepared originally[1] by the General Electric Company and here reproduced in somewhat modified form. To use these tables intelligently, the following considerations need to be kept in mind:

1. The tables apply only to *nonferrous* castings and the preferences are made on this basis.

---

[1] This article appeared initially, in substantially the form here reproduced, in *Metals and Alloys*. It is largely explanatory of Tables I and II, which are similar to, but not identical with, tables prepared by engineers of the General Electric Company. The text is the author's and expresses his views, which may differ somewhat from those expressed in the text used with the original tables.

2. Sand castings usually involve low pattern costs and have widest use. They involve high labor cost because a separate mold is needed for each casting (or group of castings if match plates are used) and because cores have to be made and inserted separately. In addition, machining costs are often high. It is possible, however, to produce sand castings rapidly and to employ alloys that are difficult to cast in metal molds and/or that have melting points so high that metal molds, if used, have short life or tend to check and to yield rough castings. Sand castings, being formed against granular surfaces, are themselves comparatively rough, and fine details are not sharply reproduced. It is difficult to hold close dimensional limits, especially where cores are involved. Nearly all alloys can be sand-cast, including

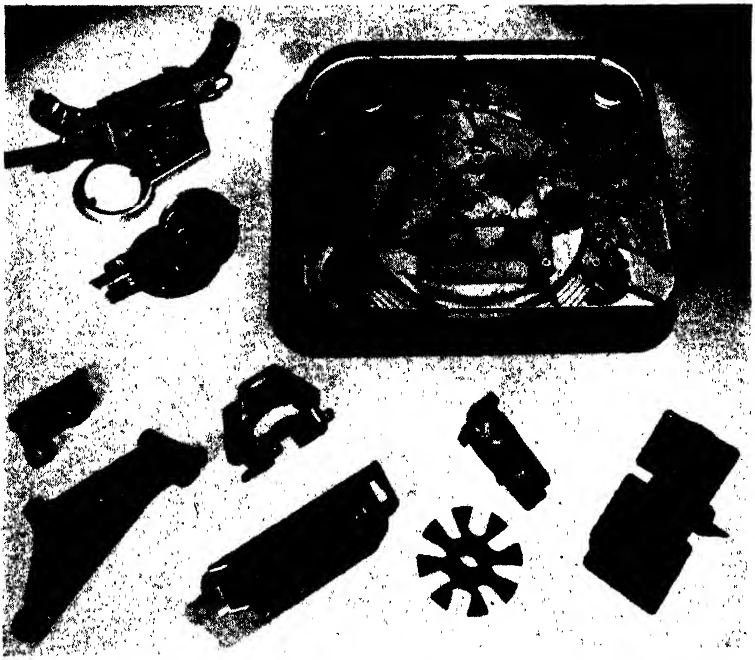

FIG. 1.—Die castings typical of those produced in various alloys. Three at top are in zinc alloys and are produced in conventional plunger machines. Four in lower left corner are in aluminum alloy, the two larger ones at least, being made in cold-chamber machines, as are also the four castings in lower right corner, of which the box with cover is in magnesium alloy and the remaining two are brass die castings.

the "white" metals based on aluminum, on magnesium, and on zinc.

3. Although excellent castings, especially in small sizes, can be produced in plaster-of-Paris molds, the process is restricted in its application and is employed in relatively few foundries. Metal patterns are needed for production runs and coring possibilities are rather limited as compared with metal-mold castings.

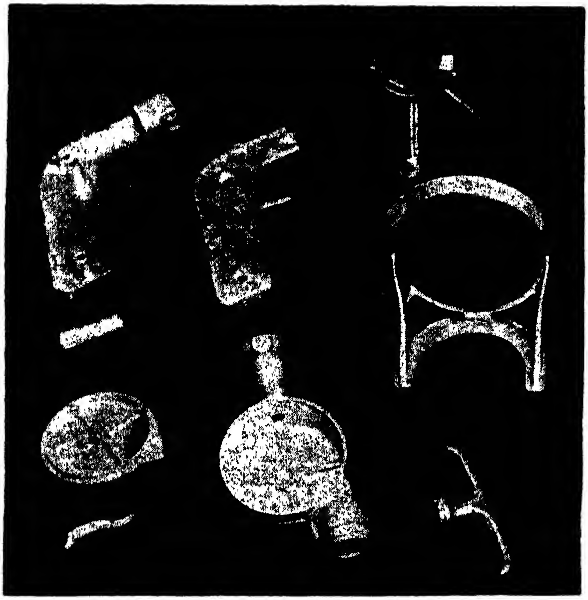

FIG. 2.—Group of castings produced in plaster-of-Paris molds. Four castings at top are in Alcoa 355 silicon-aluminum alloy and have walls about $\frac{1}{16}$ in. thick. Smallest casting, lower left, is also aluminum. Remaining castings are 60-40 yellow brass with walls about 0.070 in. thick, except the handle, which has been cast in both brass and aluminum. (*Courtesy, Atlantic Casting and Engineering Corp.*)

Molding cost is probably higher than for sand castings, but this is offset by closer dimensions which result in lower machining costs. Sharper outlines and smoother surfaces than in sand can be secured, but not so sharp as for some metal molds (especially for die castings). Though dimensional limits as close as those for metal molds are claimed, it is doubtful if they are as close as for die castings. Because plaster molds have low thermal conductivity, thin walls can be cast, but slow cooling is a disadvantage in respect to strength and to hardness, at least in aluminum alloys. Thinner sections can be had in die castings than in plaster-mold castings, at least in zinc and in aluminum alloys, and, for these alloys, superior smoothness can be attained in casting dies than in plaster. For brass the reverse may be true, except perhaps where casting dies are new or newly dressed. Some authorities state that there is less chance of internal porosity in plaster castings than in sand castings, but whether or not the conclusion is based upon strictly comparable conditions the author does not know. Slower cooling results in lower strength and lower hardness in the case of aluminum alloys (but some question this in the case of copper-base alloys) than when more rapid chilling, as in sand and in metal molds, takes place. This may be favorable in respect to ease in machining but presumably not in respect to wear resistance.

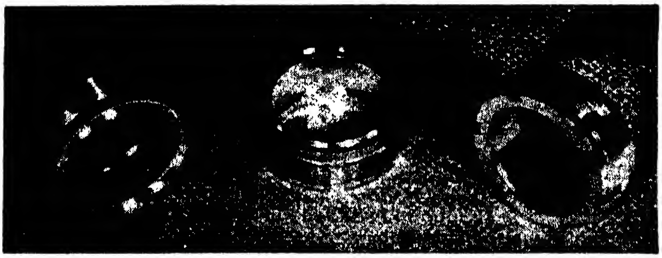

FIG. 3.—Typical nonferrous centrifugal castings by Ampico Metal, Inc.

It is probable that any cost advantage that the plaster-mold casting has over metal-mold castings (when quantities involved warrant the cost of a metal mold or die) decreases as the melting point of the alloy decreases. This is because the plaster mold, being used only once, is not greatly affected by high temperature whereas metal molds are materially affected by high temperatures. Some alloys that cast well in sand and in plaster molds melt at too high a temperature for economical casting in metal molds. They serve well for aluminum and still better for zinc alloy, but in the case of the brasses are subject to rapid heat checking and thus have relatively short life. Where aluminum or zinc alloys are concerned, plaster molds are seldom used in preference to metal molds unless quantities required are so small that the cost of metal molds is not justified and then, as a rule, chiefly when the smoother surfaces or closer tolerances than sand molds afford are essential.

4. Metal-mold castings are characterized by close tolerances and by relatively smooth surfaces and, for these reasons, require much less machining than sand castings and, in most cases, at least, than for plaster-mold castings.

An outstanding advantage of the metal mold is that it serves for the production of thousands of duplicate castings, not, as for sand and plaster molds, for only a single filling. The labor for mold making is thus far less, as a rule, than for sand or plaster molds, providing a few thousand castings, as a minimum, are required. As quantities increase, the savings increase, as metal molds are not often worn out in service.

Such machining as is needed in metal-mold castings usually involves light cuts, which can be made at high speed on light machines. Where, especially in die-casting zinc alloys, it is necessary to minimize polishing costs, preliminary to plating, dies can be made so smooth that only light buffing is needed (except at die partings) to yield an excellent surface for plating. The same is true in so-called "slush-mold" casting, a special form of permanent mold extensively used for zinc alloys. Such molds are not water-cooled and their relatively hot surface (when it is highly polished) yields a casting that has a high luster without any polishing. The thin sections produced in die castings promote economy in metal and afford better surfaces for plating, as a rule, than do thicker sections.

FIG. 4.—Centrifugal nonferrous castings in unfinished form, as produced by Allis-Chalmers Manufacturing Company.

All metal-mold castings are rapidly chilled and thus yield a hard skin. The core is softer and, especially where sections are thick, porosity often occurs, as it frequently does, indeed, in thick sections of other forms of castings. By proper design and construction of dies, however, porosity can be largely confined to locations where stresses are light and where it is of little or no significance. Porosity can, in fact, be so nearly eliminated as to be negligible for almost any type of part except for those in which the expediency of using any type of casting (which presupposes a crystalline structure) is doubtful.

It is quite generally supposed that permanent-mold castings are subject to less porosity than die castings, largely because the permanent-mold casting is usually gravity poured and thus is not subject to violent surging or spattering in the mold. *As a generality*, this supposition may be justified, partly because conditions have not required that the die casting be made substantially free of porosity so long as the porosity is confined to noncritical areas. It is deserving of note, however, that, with the most modern technique, including the use of X-ray equipment, die castings can be made so nearly free of porosity as to meet even such exacting specifications as are applied to many aircraft parts. This involves the application of higher pressures than were once common and often necessitates considerable alterations in details of dies (especially gating and venting) before they yield the required results.

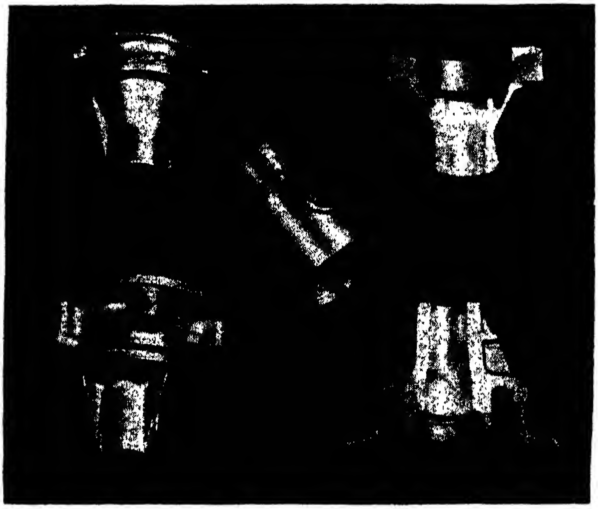

FIG. 5.—Permanent-mold castings in aluminum alloys as produced by the Permold Company. Those sectioned indicate substantial freedom from porosity.

Contrary to some published conclusions, there are, as a rule, no exacting limitations upon the machining of metal-mold castings (such, for example, as one limiting machining depth to

0.010 in.). It is true that, since the chilled outer shell is the hardest and strongest part of the metal-mold casting, it is good practice to avoid cutting through this wall, *where maximum strength is essential.* It is also true, however, that far greater depths of machining are common and that such cuts are usually made without any detrimental results whatever.

Walls of all thicknesses are drilled, tapped, milled, sawed, turned, and otherwise machined to almost any depth, often clear through the wall. This need be done, however, only where some particular condition prevents casting to the required size, say where a core or slide is not feasible or readily applied or is not justified because the cost is greater than for machining. As in the design of any part for production by any means, the designer should make sure that strength is adequate for the load imposed, allowing, of course, for such machining as is necessary and applying the proper factor of safety for the type of product (whether cast, forged, or cut from bar stock).

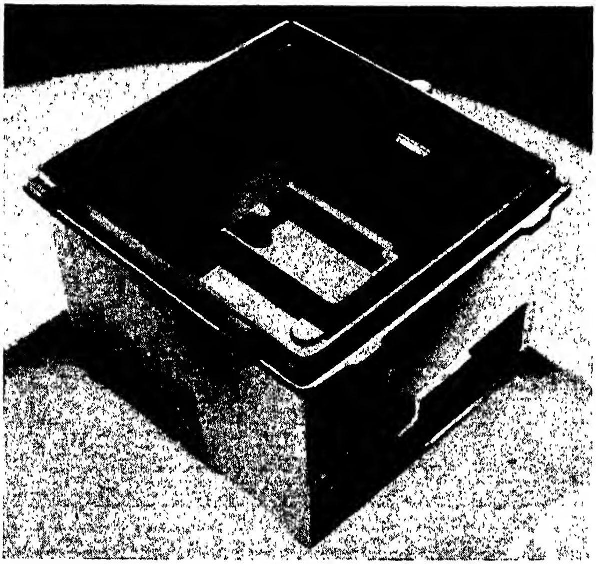

FIG. 6.—Sand-cast pyrometer case in Zamak 3 (zinc alloy), which replaced a sand-cast aluminum-alloy part. The case measures 10½ by 11½ by 7⅜ in. and section thickness is about ⅛ in. (*Courtesy, The New Jersey Zinc Company.*)

It is true that die castings are sometimes subject to blistering when exposed to high temperatures because of the expansion of gases confined in pores, providing, of course, that such pores exist, as they often do, close to the surface. This is not a serious limitation in most cases and, where it is, the die casting should either not be used or should be made substantially nonporous, as it can be with proper technique.

5. Table I differentiates between die castings made in three types of machines but *in its original form* did not take due account of the plunger type of machines, which is used today more widely than any other type but chiefly for zinc alloys, as it is not applicable to aluminum, magnesium, or copper-base die castings. To make proper use of Table I, therefore, it is necessary to know something about the characteristics of the respective types of machines.

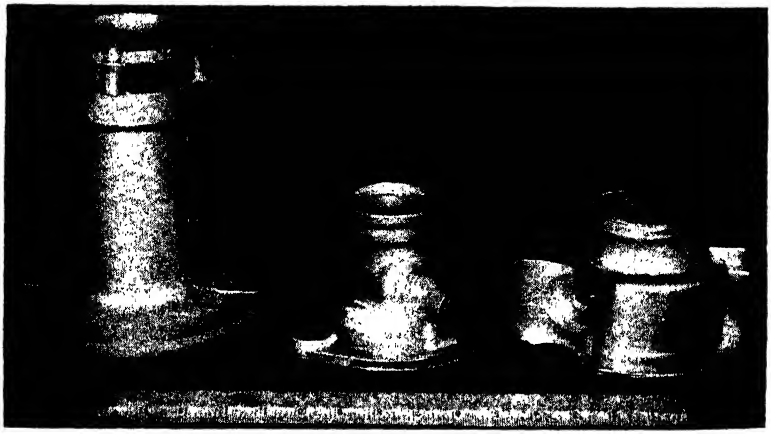

Fig. 7.—Typical nonferrous castings such as are used in aircraft applications. (*Courtesy, Bendix Aviation Corporation.*)

a. In the *gooseneck* (direct air injection) *type* the metal is held in a pot (closed except for an air valve and a gooseneck outlet) and is forced into the die by admitting air under pressure to the confined space above the metal. The pressure in such machines is usually limited to about 500 to 600 psi maximum. Today, such machines are used chiefly for aluminum, although they can be used for zinc alloys. As the iron pot and its gooseneck are washed inside and outside by molten aluminum, the latter rapidly dissolves the iron, which makes the alloy brittle, reduces its ductility and castability, and makes it harder to machine. Life of the parts exposed to the molten aluminum is short, and castings, though satisfactory for some purposes (until iron content exceeds allowable limits), are apt to be porous and somewhat undependable, scrap often being high, especially when considerable porosity is not permissible. The casting rate is rather low, seldom exceeding 110 shots an hour with aluminum alloys. Zinc alloys do not attack the metal parts significantly but the low pressure applied in gooseneck machines is not favorable to the production of sound castings. Moreover, the casting rate is lower than for plunger machines.

b. In *plunger machines*, the cylinder remains immersed in the molten alloy and the alloy is in contact with the plunger that applies the injection pressure. The casting temperature is low and the iron, if of proper composition, is not significantly affected by the zinc alloy. Operation is rapid and the pressure (which can be applied to the plunger by air or by hydraulic means) can be as high as desired. As the metal is highly fluid, however, and fills the die rapidly, it has yet to be proved that pressures in excess of 2,000 psi on the metal result in any substantial gain, though pressures of 3,000 to 5,000 psi have been tried. Today, the average pressure used approximates 1,500 to 2,000 psi. Small machines run up to 400 shots or more per hour, but 250 shots an hour is a fair average, or more than double the maximum for gooseneck machines using aluminum alloys.

c. Cold-chamber machines have gained rapidly in extent of use in recent years, especially for aluminum alloys, and are essential for die casting magnesium-base and copper-base alloys. They have an injection ram in a cylinder which is filled by ladling in molten or semimolten alloy in quantities sufficient to fill the die and leave a small slug in that part of the cylinder within the die. This pressure is applied to the ram by hydraulic means and ranges, as a rule, from about 6,000 to over 20,000 psi, the high range being chiefly for copper-base alloys.

As the metal remains only a minimum time in the injection cylinder and is usually at the minimum castable temperature, iron pickup, even with aluminum alloys, is slight. The high pressure is favorable to the production of dense castings, *provided* that the die design is correct originally or is altered (by trial and aid of X-ray of castings) until optimum conditions are secured. Zinc alloys are readily cast in cold-chamber machines, but as such

TABLE I.—TOLERANCES FOR METAL-MOLD NONFERROUS CASTINGS
These data should be used for general guidance only
Special requirements in design often affect possible minima or maxima

Manufacturing method	Metal	Dimensional tolerances commonly possible within solid die	Minimum wall thickness, in. (see Note)	Minimum cored hole		Minimum draft per side per in. of depth of side wall or holes, in. per in.
				Diameter	Maximum depth in relation to diameter	
Qualifying considerations		Tolerances should be as liberal as possible in the interest of low die and casting cost, where it is not necessary to have same to the limits given below. Closer limits than those given in table can be had, but usually only at higher die costs. Tolerances affected by moving members must be somewhat greater (across parting lines, etc.).	Varying with alloys. (Aluminum-silicon alloys, for instance, will cast in thinner sections than aluminum-copper alloys.)	Cores for forming holes produce a beneficial chilling effect. Therefore, where possible, all holes should be cored, except when so small or deep that cores may be warped or bent under the shrinkage stresses of the freezing metal, or when drilling or punching is less expensive. Cores also save metal and machine work and too, help to keep sections more nearly uniform in thickness.		Draft per side on walls where metal shrinks away from die can be somewhat smaller. Liberal draft results in superior surface finish and facilitates ejection of casting from die, often reducing casting costs.
Die and cold-chamber castings	Magnesium alloys	±0.0015 in. per in., but at least ±0.003 in.	0.050 for small areas. More for larger areas.	Smaller than $\frac{3}{32}$ $\frac{3}{32}$–$\frac{1}{4}$ $\frac{1}{4}$–1	Not cored 3 times 3-5 times	0.010
	Aluminum alloys	±0.0015 in. per in., but at least ±0.003 in.	0.035 for small areas. More for larger areas.	Smaller than $\frac{3}{32}$ $\frac{3}{32}$–$\frac{1}{4}$ $\frac{1}{4}$–1	Not cored 3 times 3–6 times	0.010
	Zinc alloys	±0.001 in. per in., but at least ±0.0025 in.	0.020 for small areas. More for larger areas.	Smaller than $\frac{3}{32}$ $\frac{3}{32}$–$\frac{1}{4}$ $\frac{1}{4}$–1	Generally not cored 3–8 times 6–8 times	0.005

TABLE I.—TOLERANCES FOR METAL-MOLD NONFERROUS CASTINGS.—(*Continued*)

Manufacturing method	Metal	Dimensional tolerances commonly possible within solid die	Minimum wall thickness, in. (see Note)	Minimum cored hole		Minimum draft per side per in. of depth of side wall or holes, in. per in.
				Diameter	Maximum depth in relation to diameter	
Die and cold-chamber castings	Brass and bronze	±0.003 in. per in., but at least ±0.005 in.	0.050 for small areas. More for larger areas.	Smaller than 3/16 3/16–¼ ¼–1	Not cored 2 times 2–4 times	0 015
Permanent-mold castings	Magnesium alloys	±0.0015 in. per in., but at least ±0.010 in.	0.1875 (regardless of whether surface is rough or smooth.)	Smaller than ¼ ¼–½ ½–1	Generally not cored 3 times 3–6 times	0 015
	Aluminum alloys	±0.0015 in. per in., but at least ±0.010 in.	0.125 (0.090 where at least one side can be made reasonably rough).	Smaller than ¼ ¼ ¼–1	Generally not cored 3 times 3–6 times	0 015
	Bronze	±0.005 in. per in., but at least ±0.010 in.	0.075 for small areas. More for larger castings.	Smaller than ¼ ¼–½ ½–1	Generally not cored 2 times 2–4 times	0 020

NOTE: The minimum wall section that can be cast with different alloys and by different processes is not absolutely fixed. It depends on the size and design of the casting, location of the section with reference to heavier adjacent sections, on the die, the alloy type of machine, and the pressure applied. In general, the lower the melting point and the more fluid the metal, and the shorter the distance the metal must flow between the chilling walls of the die or mold, or the faster the metal transverses the distance, the thinner the wall may be. There is practically no limitation on maximum wall thickness. Sections somewhat heavier than minimum castable are recommended (especially for die and permanent-mold castings) when castings are to be plated, as surfaces are apt to be smoother.

Finishes: Metal-mold castings can be supplied with three different finishes, as follows, and should be marked on drawings to designate type of finish desired.

No marking—Commercial: standard finish produced by commercial, but carefully controlled, routine.
Decorative (required for plating): free from flow marks and from swirls and other surface imperfections.
Poorer than commercial: suitable for unexposed or painted surfaces.

machines have yet to demonstrate any advantage over the plunger type *with zinc alloys* and are much slower to operate (about 90 shots an hour is near the maximum yet attained, as far as the author has been able to learn), the cold-chamber machine is rarely used for zinc alloys.

Excellent castings based on aluminum, on magnesium, and on copper are produced in cold-chamber machines but the copper-base alloys, because of the high casting temperatures, are hard on cylinders, rams, and dies. The sound castings produced, especially in aluminum and in magnesium alloys, have led to their extensive application as aircraft parts, especially for secondary or lightly stressed parts.

There is little doubt that aluminum die castings produced in the cold-chamber machine are denser than those produced in gooseneck machines and that limits on iron content are much more readily held. Some aluminum alloys suitable for cold-chamber machines are difficult or impossible to cast in the gooseneck type. But for zinc alloys there appears to be no advantage in cold-chamber machines over the plunger-type machine, since pressure applied to the metal can be as high in the plunger machine as it is advantageous to employ.

Pressure applied in casting is not necessarily the criterion upon which to judge die castings even in respect to soundness, but too low a pressure is certainly to be avoided. Clearly, too, there is no point in using higher pressures than are needed to gain satisfactory results, as then a heavier and slower machine must be used. Where substantial freedom from porosity is essential, it is often more helpful to alter details of die design, especially gating and venting (not necessarily changing the shape of the casting or its size), than to boost the pressure above that known to yield sound castings satisfactory for given needs.

6. Centrifugal castings mentioned in Table I are a special form of casting often made in permanent molds but having rather limited application. They are made chiefly (in nonferrous castings) in copper-base alloys and in bearing alloys. The chief merits of the process are in applying considerably higher pressures than in gravity castings and thus tending to make castings that are dense, and in excluding dross, which is forced toward the inner wall of the bore and is machined away subsequently. Though centrifugal castings are not necessarily limited to shapes

symmetrical about the axis of rotation, these are most common, and the feasible shapes are limited.

Table I applies only to metal-mold castings and, as indicated, the data are for general guidance only, as particular design conditions affect tolerances, minimum wall thicknesses, minimum core size and, in some cases, even the minimum draft feasible.

TABLE II.—RELATIVE STANDING (NUMBERED IN ORDER OF MERIT UNDER VARIOUS HEADINGS) OF DIFFERENT NONFERROUS CASTING METHODS

Heading	Casting process					
	Sand	Plaster of Paris	Centrifugal	Permanent-mold	Gooseneck die cast	Cold-chamber and plunger die castings
Porosity	6	2-1	1-2[a]	3-4[b]	4-5	1-3
Surface smoothness	6	3-4[c]	5-4[a]	3-4[b]	2-3	1
Sharpness of outline	6	3	4-5[a]	5-4[b]	2	1
Strength (solid metal)	5-6	6-5[d]	3[a]	1[b]	2-1	1-2
Thin section	5	3[c]	6	1	2	1
Tool cost[e]						
Pattern	1	2-3				
Molds	...	...	3-2	4	5-6	6-5
Speed of production	4	5	5	3	2-1	1-2
Labor cost per casting (as cast)[e,f] including that for making pattern, match plates, and metal mold or die:						
For small and moderate production including setting up of die	1	2	4	3	5-6	5-6
For large production	5	6	1	3	2-1	1-2
Possible savings in machining	6-5[g]	4	5-6[g]	3	2-1	1-2

[a] In metal left after removal of drossy material from inside wall.

[b] Only in material next to metal mold in case of semipermanent molds.

[c] May be 1 for copper-base castings.

[d] Inferior in strength to sand castings in aluminum alloys but possibly superior to sand castings in copper-base alloys.

[e] Tool cost and cost per casting depend on number of patterns per plate or impressions in die; the more castings made at one operation the lower the labor cost per piece, with inversely increasing tool cost. Sand and plaster-of-Paris patterns lend themselves more economically to multiple impressions than metal molds do.

[f] On basis of most economical tool setup (as to number of impressions on one pattern plate or in one die) for comparative production quantities.

[g] May be reversed in certain cases.

Table II, even in the revised form here presented, may still leave questions concerning certain of the relative ratings under some headings. As with other generalizations, it is certainly subject to exceptions in particular cases. The original presumably was based, however, upon extensive experience in the production or in the purchase of most or all the types of castings covered and, partly for this reason, may well prove helpful as a general guide. Table II, in its present form, is believed to be open to fewer objections than in its original form. In making specific applications, however, it is well to weigh all the significant facts and all conditions to be met and to balance these before making a final choice.

CHAPTER XII

DIE CAST OR STAMPED? DESIGN ADVANTAGES AND RELATIVE COSTS

By Herbert Chase

Nearly every product engineer who designs or draws specifications for small to medium-sized parts is faced with the question: Shall the parts be stamped or die cast? Naturally, no categorical answer to the question can be given and no hard and fast set of rules can be formulated. Metal products made by other processes such as sand castings, forgings, screw-machine products, or cold upsettings may be a better choice under certain sets of conditions. In this chapter, however, only die castings and stampings are compared, the advantages and limitations of each being outlined.

It is fully recognized that there are many variables in nearly every design and that compromises, based on judgment, must enter into the decision whether to use die castings or stampings. Sometimes either may give equally satisfactory results but it is assumed here that the objective is a satisfactory result *at minimum cost.* In this chapter, special attention is given to parts for which either type of construction may be or has been used.

The term "stamping," as here used, refers to parts blanked and/or formed from sheet metal, in which any changes occurring in section thicknesses, because of flow of metal in forming, are only incidental. Processes that might be designated as cold forging, including swaging or coining, in which marked changes in section thickness take place, are ruled out, not for lack of utility, but because their admission here would be likely to cause confusion.

An engineer with a prominent maker of stamping presses, who reviewed this chapter during its preparation, contends that, since some of the same presses used for stamping are employed also for swaging and coining (really cold-forging operations that effect marked changes in section thickness), products of these operations should be included in comparisons with die casting. The author is not unsympathetic with this point of view and fully admits the utility of swaged and coined parts. Nevertheless, he considers that the number of such parts made as compared with the quantity of die castings produced is so small that their exclusion from this discussion seems fully justified.

By a "die casting" is meant a product formed by forcing molten metal under pressure into a metal die as distinct from castings made in sand and in so-called "permanent" metal molds filled by gravity. The die-casting alloys here considered are nonferrous and are based chiefly on zinc, aluminum, and copper.

Some important advantages and limitations of stampings and die castings have been summarized in general terms in Table I. The notations are not all of equal weight and apply especially to more or less borderline cases in which either stampings or die castings could be used. Although Table I can be consulted to advantage when making a choice between a stamping and a die casting, the particular and essential conditions to be met should also be considered. If conditions do not automatically rule out consideration of one or the other type of part, then the admissible evidence on each side should be weighed. Frequently it pays to design the part for stamping and also for die casting and then to weigh the advantages of each as shown by cost figures based on estimates. Many assemblies profitably employ both stampings and die castings. As the subject is studied, it becomes apparent that a logical selection is not always the open and shut proposition it may appear to be before the facts on both sides are evaluated.

A much more rapid production and a wider choice of metals are among the major advantages of the stampings, which possess all the superiority of wrought over cast parts. A preponderant proportion of stampings are made from steel, which is relatively low in cost. Steel stampings can be tempered and have many desirable properties, such as hardness and ability to withstand higher temperatures, not possessed by die castings. For a given weight, the stamping possesses greater strength and toughness and is sometimes easier to finish. Stampings, however, cannot be made so complex as can die castings and often they require many more die and assembly operations.

TABLE I.—TABLE OF COMPARATIVE ADVANTAGES AND LIMITATIONS OF DIE-CAST AND STAMPED PARTS

	Die castings	Stamped parts
Choice of metals	Limited to relatively few nonferrous alloys.	Much wider than for die castings.
Size of part	Maximum size smaller than for stamped parts.	Almost unlimited.
Physical properties	Generally inferior to sheet metals, especially steel (some exceptions). Have granular structure characteristic of castings, sometimes including porous sections. Zinc alloys most frequently used are not subject to red rust and cost less per pound than nonrusting sheet metal for stamping.	Stamped parts can be made lighter in weight than die-cast parts of equal strength. Possess the advantages of wrought over cast metals.
Complexity of form	Extremely complex parts possible in one piece and in a single operation. Side holes, ribs, special forms of recessing, bosses, bearings, and threads are produced in a single operation. Integral rivets or fastenings can be cast on piece.	Often require extra operations and assembly work especially when combined with other stampings or screw-machine parts. Integral ears or lugs for assembly often included.
Variation in section thickness	Almost any variation.	Very limited in single pieces.
Dimensional tolerances.	Dimensional accuracy good.	Spring-back hard to control on drawn parts and tolerances often have to be greater than for die castings. May go out of shape when polished or buffed.
Appearance of part	Square edges and fine detail usually better than for stamped parts, also shapes not feasible in one-piece stampings are readily produced.	Minimum radius at bends and edges or corners is equal to that of the metal thickness. (Square corners and sharp lines can be secured, however, by line coining.) Ripples and draw marks are often hard to avoid.
Smoothness of surface.	Sometimes inferior to sheet metal. No ripples on polished surfaces; chance of warpage in polishing less than in drawn parts.	Excellent. Ripples and/or draw marks may show on polished surfaces.
Choice of finishes	Ample for practically all needs but not quite so wide as for stampings.	Almost unlimited, some suitable for lithographing and porcelain enameling.
Cost of dies (including those required for fin removal).	Often lower than for stamping dies.	Higher, especially when the die is of the progressive or drawing type.
Cost of parts	Usually higher than for steel stampings especially in large quantities. Often lower than for nonferrous stampings.	Preponderant quantities made from steel are usually lower in cost than die castings.
Waste in scrap	Small.	Often considerable.
Production rate	Rapid but usually slower than for stampings, although several identical or dissimilar parts can often be cast at the same time in same die.	Very rapid and often automatic.

In addition, almost every metalworking shop has from one to scores of stamping presses, whereas relatively few have die-casting machines, the production of die castings usually being left to those with special experience in this art. The die-casting industry is younger and much smaller than the stampings industry. It is not uncommon for stamping presses to run from 50 pressings a minute upward, whereas, although speeds of 1,000 cycles an hour (or about 15 a minute) are attained with some die-casting machines, 300 to 400 cycles an hour (say 5 to 7 a minute) is fairly fast.

Although opinion to the contrary is sometimes erroneously held, tooling for the die casting is often lower in cost than for the stamped and formed part. Here tooling refers to true production tools including dies and other supplementary items that may be required; it does *not* refer to temporary dies, which are made, especially for stamping, for trial purposes or short runs only, or to dies cast in soft metal or those made from fiber or from other nonmetallic materials, such as are used for forms to shape parts, chiefly from aluminum or other soft metal, especially by the rubber-pad method, the pad taking the place of a female metal die.

As specific examples show, there are many parts for which die castings are more economical, tooling costs considered, especially when the production run involves moderate to fairly large quantities. As quantities required increase, the greater rapidity of the stamping process begins to count and, even though several machine and assembly operations are involved, the net cost of the stamped products may become lower than that for the equivalent die casting, despite the higher die cost.

For small parts, another highly important consideration enters, that is, several small die castings, including quite dissimilar parts, perhaps for the same mechanism, are often produced in a group in the same die and often two or more dies can be run simultaneously, thus multiplying the production rate and also reducing the cost of tooling and of die setup. Hence, if the designer decides to die cast one part of an assembly, he may, at the same time, have several other small parts cast at only a slight additional cost far lower than they could be produced by other means. This applies especially to quite small parts, not often to large die castings. Figure 1 shows a gate, including several parts cast in one operation in one die.

The stamping, as here defined, is essentially a piece of uniform section thickness (except for such incidental changes in thickness as occur in ordinary drawing operations), whereas this is seldom true of the die casting. If the stamping must have a hub with a key, or act as a bearing, or have a projection, a fastening lug, a cam, a shaft, or a driving gear that requires a thickening of section at some point, such part, in general, must be made by some process usually requiring extra tooling and extra assembly operations, whereas these and similar parts ordinarily can be made integral with the die casting, often at negligible extra cost.

Many assemblies combine a die casting and a stamping with great advantage. Also, stamped and screw-machine products are often used as inserts in a die casting where increased strength or hardness is required or where the shape cannot be formed by die casting. Alert designers ought not to overlook these considerations.

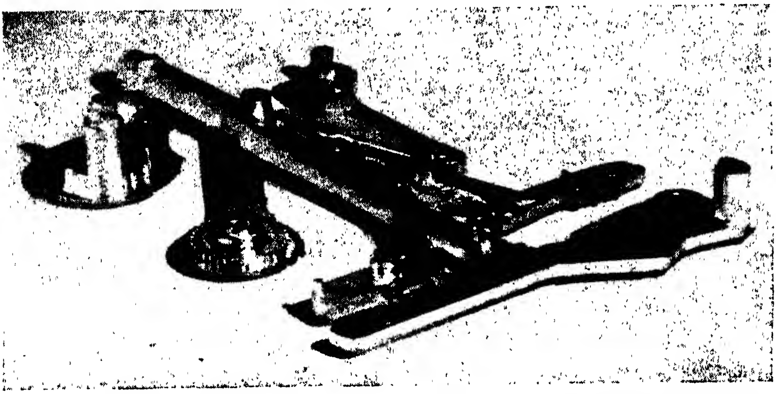

Fig. 1.—Gate of six zinc-alloy die castings all of which are produced in a single combination die at one filling. No two of the casting are duplicates. Most of them could not be duplicated in stamped form but, if they could be, each would require a separate stamping die with a separate press setup for each die.

One highly competent designer who has at his disposal well-organized departments to produce stampings and die castings states that, in deciding which to use, he considers first, strength; second, life; and finally, cost. If strength and life are adequate in either form and the number of operations required does not exceed two or three, the part is likely to be stamped, since the quantities are nearly always large enough to amortize tool costs quickly. If, however, a part requires more than two or three operations, the die casting is quite sure to be selected. Moreover, if it proves economical to die cast one part, several others are likely to be so made in a single combination die, because their casting cost will be almost nil. There remains the cost of fin removal and perhaps of some machining, but these or some other operations costing as much or more are likely to be needed if the parts are stamped.

Advantages that can be obtained with sand casting or some other type of production should also be weighed. No arbitrary design should be laid down with production a secondary consideration.

Weight and minimum section thickness sometimes favor the stamping, although small die castings have been made in section thicknesses as low as 0.015 in. As size goes up, the section thickness usually has to be increased somewhat in the die casting, but this is not necessarily so in the stamping unless stiffness is a factor. If the die casting and stamping compared are exact duplicates, both as to shape and to dimensions, including section thickness, stiffness is then purely a function of the materials and is likely to favor the stamped part. Often the die casting is stiffer because greater section thickness is required. When longitudinal ribs are used, for example, along a die-cast tubular part joined to a flange, the ribs increase stiffness at an insignificant extra cost. Although similar ribs can be used also on some stamped parts the added cost may be prohibitive.

Finishing costs are also more or less of a standoff as between the two types of parts, sometimes favoring one and sometimes the other. An executive with a prominent company making both stampings and die castings in large quantities states that, in general, it is easier to prepare a stamped surface for finishing than it is a die-cast surface where the surface is long, large, or flat. Where the piece is small, the die casting is the easier to prepare for finishing. Rejects may run higher with the die castings, however, because of small surface defects. This executive adds, "There is no doubt as to the superiority of die castings over stampings when it comes to holding certain significant dimensions. Once the die is correct and the casting cycle worked out for correct shrinkage, die castings remain uniformly accurate."

Fins or burrs often have to be removed from both stampings and die castings and such operations as drilling, tapping, and reaming may be about the same. Punching holes in zinc-alloy die castings can be done as readily and as cheaply as in sheet metal. Often this is done when it proves cheaper than coring or drilling.

In one plant that the author visited while preparing this chapter, he was told that more die castings would be used were it not that the dies required often take longer to make and put into use than do stamping dies, partly because the latter are often assembled from several parts whereas fewer parts or perhaps only two halves are needed in die-casting dies. This condition doubtless applies in some cases, especially where only blanking, piercing, and simple bending operations are required, but, if drawing dies are required for the stamping, the condition may be reversed.

From another manufacturer came the information that the maintenance on tools, of which a large proportion are for stamping presses, has run over a period of several years between 50 and 75 per cent of the cost of new tools. Although these figures probably do not apply in many cases to dies producing stampings for which die castings might be substituted, it is a fact that maintenance charges on stamping dies are often high, whereas they are much lower in dies for die casting, especially when the dies are for zinc alloys that cast at a relatively low temperature. In the latter case, maintenance charges are an extremely small factor especially if the dies are well made initially.

The *pulley* (Fig. 2) with ventilating vanes for driving a small lighting generator, when made in a one-piece die casting, weighs about twice as much as the stamped assembly and costs approximately 17 cents each, or about 3 cents more than the stamped assembly. But this saving is not realized until a quantity of 100,000 is reached. Since the year's requirements approximate 300,000, the saving in stamped form is worth while, even though the dies for the stampings cost approximately $1,200 as against about $580 for a single-cavity casting die. Production rate for the stamped assembly is about 50 per cent greater than for the die casting, although it involves eight operations, including making the hub (a screw-machine product) with keyway, as against four on the die casting. The steel pulley is built up from two dished stampings 0.062 in. thick, assembled, and then staked and brazed to the hub, a third stamping forming the

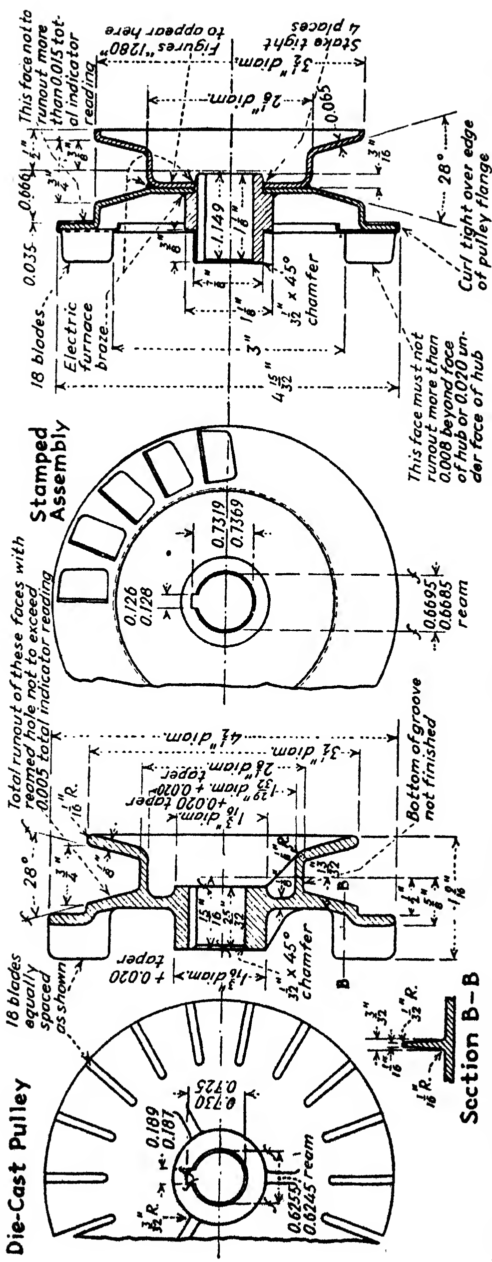

FIG. 2.—The combined pulley and ventilating fan for a lighting generator here shown were produced both by die casting and by stamping. The two products are not exact duplicates but serve the same purpose. Relative die and piece costs are given in the text.

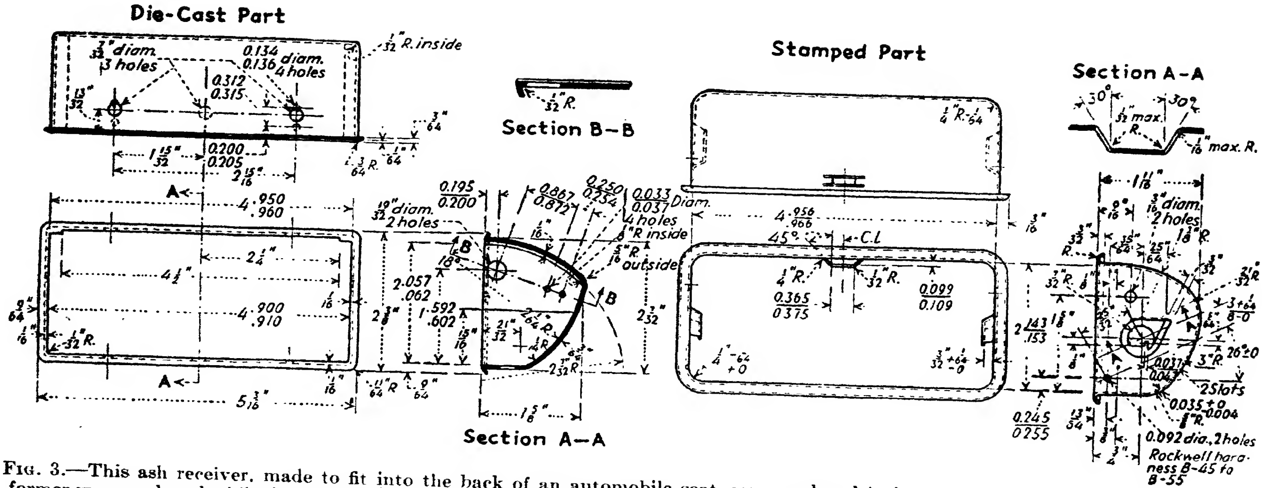

FIG. 3.—This ash receiver, made to fit into the back of an automobile seat, was produced in both die-cast and stamped form. The former was employed while dies for latter were being prepared, but the stamping is cheaper and lighter in the large quantities required.

vanes (0.042 in. thick) being assembled by crimping over one side flange of the pulley. Accuracy is said to be equal and dynamic and static balance on both is held well within the specified tolerance of ⅛ oz.-in. Although the manufacturer states that neither has any advantage over the other in finished form except as to cost, there is little doubt that the steel pulley is stronger and would prove more resistant to wear from a slipping belt, although neither strength nor wear appears to be a problem. The die casting is better in appearance and is not subject to red rust, considerations which are sometimes important.

In the ash receiver (Fig. 3) for car-seat backs only the edge of the flange is exposed. Dimensions are not required to be close. Stamping is cold-rolled steel chrome plated, and presumably the die casting is similarly finished. Die casting cost nearly twice as much as the stamped and drawn part and was used only as emergency construction (presumably until the stamping dies could be completed and the part put into production). Making the stamping involves 11 operations and it is produced at the rate of 663 per hour. The die casting requires four operations, with a production rate of 250 per hour. Weight per 1,000 pieces is 250 lb. for the stamping and 400 lb. for the die casting. Approximate quantity required per year is 350,000 ash receivers. Material cost for the stamping is 1.659 cents and 2.966 cents for the die casting. Labor cost on stamping is 3.26 cents and on die castings is 7.19 cents. It is presumed that this part required a bright finish only on front of narrow flange. Had buffing all over been required, it is probable that the stamping, like the clock case shown in Fig. 4, would go out of shape and be unsatisfactory.

Although the clock case (Fig. 4) is die cast in zinc alloy, it has section thickness of 0.034 in., the same as that of the sheet brass from which it was originally drawn. Stamping cost was one-third more than for the die casting. The die-casting dies cost one-quarter as much as dies for making brass case. Stamping required five operations. One casting and one trimming operation completed the die casting. Considerable scrap loss occurred with the stamping, virtually none with the die casting. When buffing the brass case, draw marks and rippled surfaces showed and, because buffing tended to relieve drawing strains, the cases distorted so badly that they were not salvageable.

Substitution of the die-cast case overcame these difficulties. As the die casting was identical in dimensions and shape with the drawn case, new assembly fixtures were not required.

Six small parts for a vending machine are readily produced simultaneously on a single gate, using a single combination die only 6 in. square and costing not over $400, including tools for removing flash. Castings appear somewhat rough in Fig. 1 because flash has not been removed, but they are clean-cut and accurate in contour when flash has been sheared off. Some of the six parts could be stamped, but, if so made, each would require a separate die and separate production and even then would not be complete without the addition of screw-machine parts to form hubs, pivots, and cams that are integral with the die castings. Stamped parts would be harder, stronger, and more resistant to wear, but parts die cast in zinc alloy are entirely adequate for the service conditions encountered.

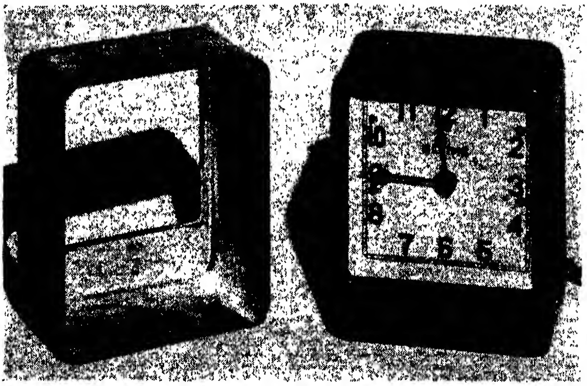

FIG. 4.—Case for an inexpensive electric clock originally drawn from sheet brass, which tended to go out of shape and show ripples when buffed for plating. When the die casting here shown was substituted, both die and piece cost were lowered and distortion troubles were avoided. Both cases were 0.034 in. thick and other dimensions were identical in both.

The saucer-shaped die casting, (Fig. 5) has a beaded edge or rim and a central tubular portion, which is serrated on one end to prevent a mating part from turning after assembly. In the die-cast form shown, piece cost was $2.87 per hundred. The die cost $325, which included the tool for trimming flash. The section thickness, except at beaded edge, is about 0.030 in., and the outside diameter is 4¾ in. When it was proposed to make this part as a stamping in steel, a large producer of stampings quoted $3.30 per hundred pieces, plus a die cost of $1,000. These prices did not include the serrations at the top of the tubular portion, which in the stamping involved an extra operation not necessary in the die casting. Quantities involved ran from 100,000 to 250,000 pieces.

The one-piece die-cast rotor (Fig. 6), for a sirroco-type blower, is 8¾ in. in diameter, has 48 blades, is 1⅛ in. long, and weighs 29½ oz. It displaced a stamped and assembled steel rotor. The die for die casting cost approximately $750, and finished and balanced die castings cost the purchaser, who owns the die, about half of what he formerly paid for the finished stamped rotors assembled to a sand-cast hub.

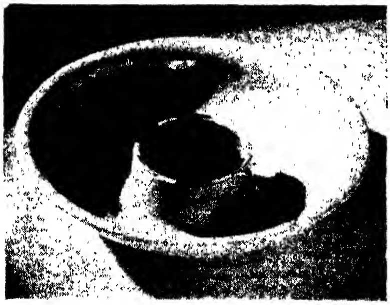

FIG. 5.—For this dished part of a juicer, a die casting proved to be much cheaper than an equivalent steel stamping, besides involving lower die costs and providing a serrated edge on the center portion not figured for the stamped part.

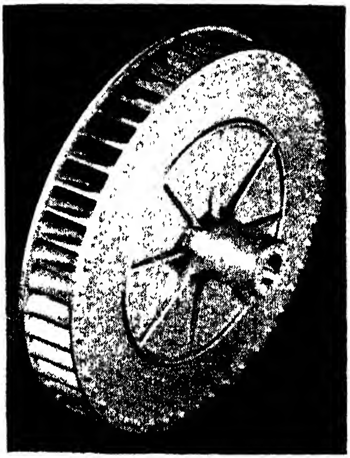

FIG. 6.—Although this blower rotor for an oil burner required an expensive die for casting, both die cost and piece cost were lower for the one-piece die casting. The stamped assembly, which was superseded, involved assembly operations and required a sand-cast hub.

The die-cast rotor includes a hub with a flange having integral blades cast on one side. Blades are supported also by an integral ring, the inside diameter of which is equal to the diameter at the outside edge of the blades so that the core forming the blade spaces is readily withdrawn. Small nibs are cast on the

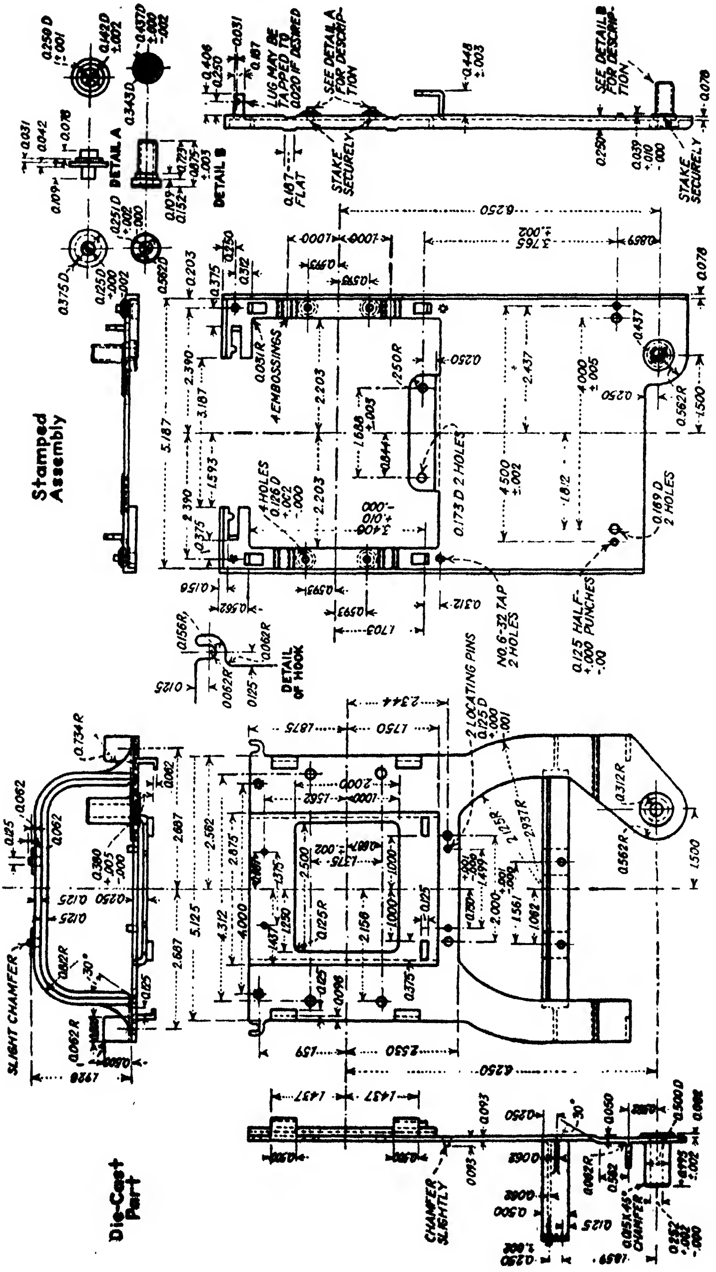

FIG. 7.—Actual production of this support bracket was accomplished by stamping the main portion and assembling screw-machine elements to it because less delay in making the parts was encountered. In lots of 5,000, the total cost per part was lower for die casting but, in lots of 20,000, the stamped assembly proved cheaper.

flange and are ground off as required in dynamic balancing to within 0.002 in.-oz., according to the die caster. The keyway is formed by the casting-die core.

In the stamped rotor, the blades are formed separately and have, at each end, projections that are inserted in holes at one side and in a ring of a flange at the other side and are then riveted over to fasten the assembly together. A sand-cast hub is then riveted to the side plate. Data on the cost of the stamping dies are not available, but as these include numerous punches for piercing the holes for blade fastening, as well as a die for blanking the blades and for forming them, it is doubtful if their cost is lower than that for the casting die. Assembly operations and machining of the sand-cast hub also increase the cost of the stamped unit.

Although the support bracket (Fig. 7) for use in a radio receiver was actually produced as a stamping, it would have been die cast had it not been possible to secure the stampings in finished form more quickly. The parts are not exact duplicates but perform the same function, the die casting being made in one piece with integral mounting bosses, whereas the stamping requires the addition of parts produced in a screw machine. These have to be staked in place. Only blanking and bending operations are required on the stamped part, no drawing being needed. Appearance is not of special importance, but the stamping, which is of cold-rolled steel, has to be cadmium plated to avoid rusting whereas the die casting requires no applied finish and is not subject to red rust. Actual quotations on die for die casting was $410, and for the castings themselves $139.50 per 1,000 in lots of 5,000, and $138 per 1,000 for lots of 20,000. The stamping dies cost $695 and the piece price was $107.40 per 1,000. On this basis, the total cost, dies included, in lots of 5,000 is $1,232 for the stamping and $1,107.50 for the die casting. In lots of 20,000, however, the lower piece cost for the stamping brings the total cost, dies included, to $2,743 as against $3,170 for the die casting. Strength is satisfactory in either form.

Figure 8 shows a swivel bracket for outboard marine engine, produced in both die-cast and stamped form. The die casting was used first and was produced in aluminum alloy to gain light weight and resistance to salt-water corrosion. The part supports the entire weight of the engine and forms the pivot

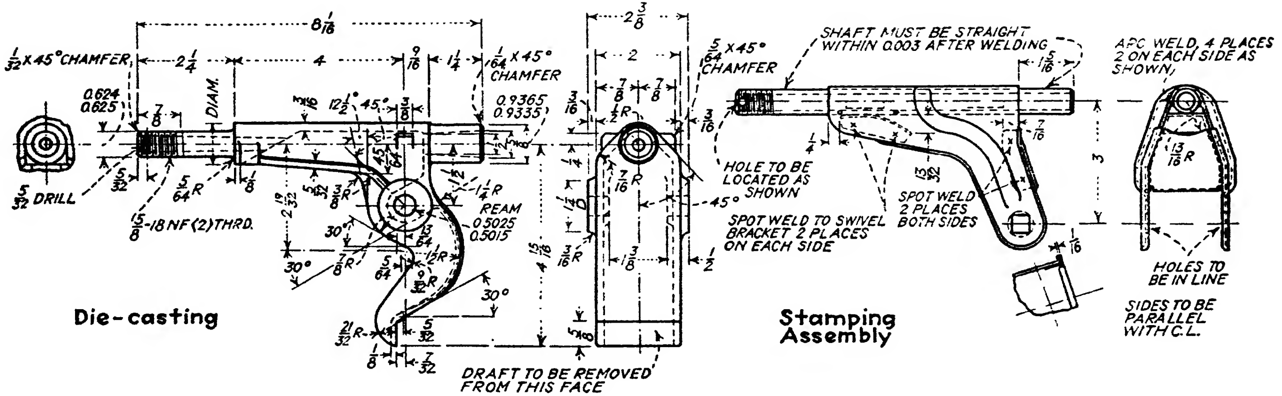

FIG. 8.—In this outboard-motor bracket, the die-cast part, made in aluminum alloy and used originally, resulted in some breakage; hence it was superseded by an assembly largely stamped, which is much stronger than the die casting. Dies for the stamping cost less than those for the die casting.

about which the engine is turned in steering. Some breakage occurred in service and this fact, together with the lower piece cost of the stamped assembly, resulted in substitution of the latter. In producing the stamped assembly, three sets of dies are required for blanking and forming the two major parts from 14-gage (0.078-in.) hot-rolled steel and one from 22-gage (0.031-in.) hot-rolled sheet steel, the total cost of the dies and fixtures being approximately $1,075. The pivot is a piece of 5/8-in. seamless steel tubing with 14-gage wall. Assembly is effected by arc-welding the main stamping to the tubing and spot-welding the remaining stampings to the main stamping, after which the assembly is zinc plated, given a dichromate treatment, and aluminum painted. Naturally, the steel assembly is much stronger than the aluminum die casting. The die for the die casting cost approximately $1,235. The weights are 10½ oz. for the die casting and 14½ oz. for the stamped assembly.

CHAPTER XIII

DIE-CAST OR SCREW-MACHINE PRODUCT?

By Herbert Chase

Designers of metal products are aware of the facility with which parts can be made by the screw machine and by die casting.

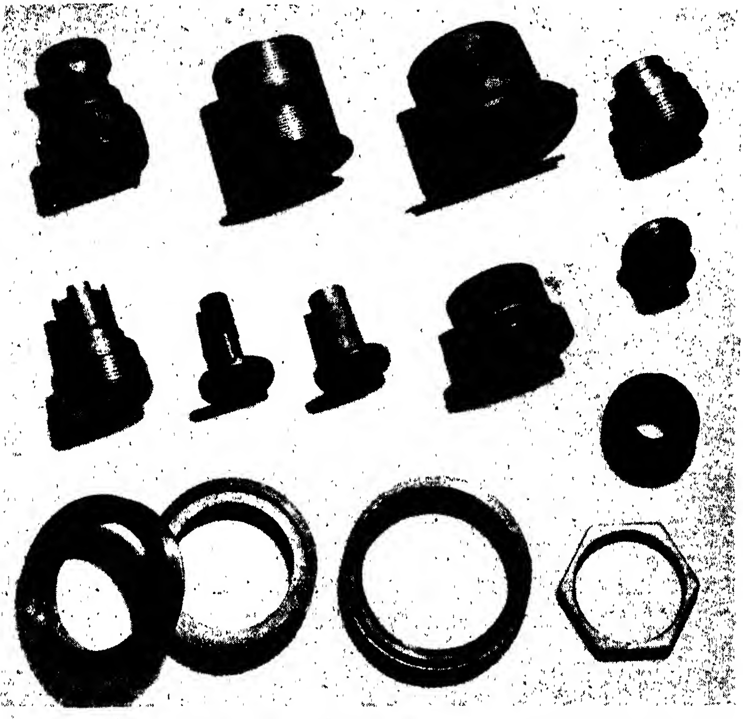

Fig. 1.—These parts, die cast in alloys based on zinc, aluminum, and copper, respectively, could be duplicated in shape, though probably not with equal economy, on the screw machine, but certain minor secondary operations on other machines would be necessary.

It is less generally realized, however, that certain types of parts can be manufactured alternatively by either type of machine.

Both types of product have advantages and limitations that deserve consideration when making a choice between the two.

As distinct from the hand, or nonautomatic, type, the automatic screw machine is an automatic hollow-spindle turret lathe and, within size limitations, can produce rapidly and economically almost any shape of part that can be turned from bar or tubular stock by a lathe. By the use of tools, fixtures, or attachments, some of which are small machines, many supplementary operations such as slotting, milling of flats, burring, and cross drilling can be performed. These and other operations are sometimes done more advantageously on separate secondary machines. Operations that the screw machine proper can do on the cutoff end of the piece are somewhat limited but some machines are provided with attachments for removing the burr and for doing other light operations after the piece has been cut off from the bar stock and transferred to the attachment.

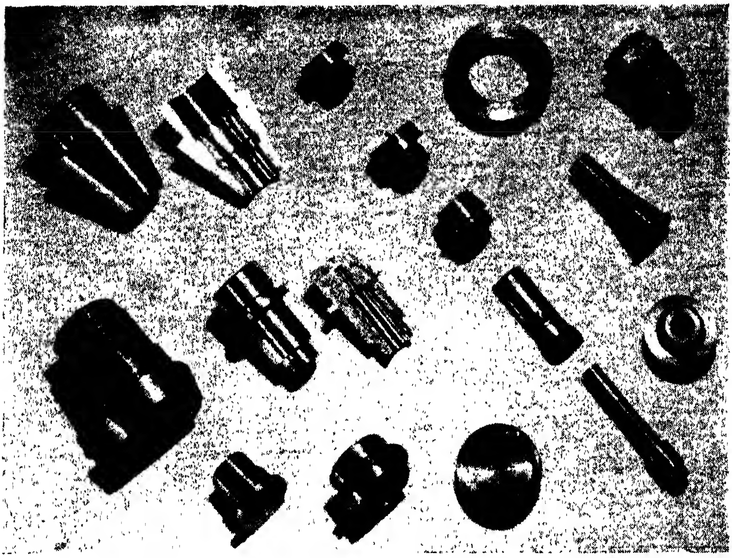

FIG. 2.—Parts produced from steel, brass, and aluminum bar stock on the screw machine. They could be duplicated, as to shape, by die casting but then would have the characteristics of cast rather than of wrought metals, of course, and would require some supplementary machining.

It is also possible to equip a screw machine with a magazine feed and to use it as a chucking machine. With a magazine feed,

TABLE I.—DESIGN AND COST FACTORS COMPARED FOR DIE-CASTING AND SCREW-MACHINE PRODUCTS

	Die castings	Screw-machine products
Materials	Zinc alloys lowest in cost and most widely used. Aluminum alloys next in cost and extent of use. Alloys of copper, magnesium, tin, and lead used for some purposes; no ferrous materials available.	Free-machining steels lowest in cost and most widely used. Many other steels available. Brass widely used and many other nonferrous alloys are available. Some alloys suited for die casting are not available in rods or tubes. Some plastics used.
Weight (specific gravity)	Zinc alloys average 6.7. Aluminum alloys average 2.75. Magnesium alloys average 1.81. Copper alloys average 8.40. Lead alloys average 10.65.	Free-machining steels about 7.86. Free-cutting leaded brass 8.50. Range of other materials about the same as for corresponding die-casting alloys.
Physical shapes	Generally comparable to screw-machine products. Often include detail differences such as ribs, bosses, irregular recesses, tapered flutes, and serrations not capable of duplication by screw machine. Readily made hollow at both ends without extra operations.	Primarily generated by rotation and those having section of stock used, but secondary operations often performed by attachments permit certain variations from rotational shapes. Shaping at cutoff end limited except in secondary operations. Can have interior and exterior undercuts not feasible on die castings.
Surface smoothness	Often cast so smooth that only buffing is required before plating but average may be inferior to that on screw-machine products.	Depends on tools used and other factors but is often remarkably good and can be brightly burnished. Surfaces normally brighter and often smoother than for die castings.
Dimensional accuracy	Usual commercial tolerance ± 0.001–0.003 in. per inch on most important dimensions.	Usual commercial tolerances ± 0.001–0.003 in. on most significant dimensions regardless of size of piece.
Tooling cost	Casting die and tools for flash removal likely to exceed tooling cost on screw machine. Tool upkeep usually low or negligible.	Often an important consideration in total cost. Tool upkeep often rather high, but total tooling costs are likely to be lower than for die castings.
Production rate	Usually 50–1,000 cycles an hour and one to several castings per cycle, with one man usually in continuous attendance.	Usually 30–3,600 pieces produced per hour, depending on number and character of operations, size, and material used. One man usually attends several machines.
Labor cost	Likely to be higher for die casting because of extra operations needed subsequent to casting and use of nonautomatic machines.	Likely to be lower as machines are automatic and often complete all machining required.

TABLE 1.—DESIGN AND COST FACTORS COMPARED FOR DIE-CASTING AND SCREW-MACHINE PRODUCTS.—(*Continued*)

	Die castings	Screw-machine products
Material cost*. . . .	About 10 cents per pound for zinc alloys. About 12 to 17 cents per lb. for aluminum alloys. About 10 to 14 cents per pound for copper alloys. Usually lower than for screw-machine products except when latter are in low cost steel.	About 4.5 cents up per pound for free-cutting low-carbon steels. About 15 cents up per pound for free-cutting brass; usually exceeds that for die casting unless low-cost steel can be used.
Waste in scrap	Slight because scrap is remelted, as are also any rejects produced.	Often considerable especially if much metal is removed, but nonferrous scrap usually has good resale value.
Machining costs. . . .	Varies from slight to considerable depending on requirements, all in secondary operations.	Usually moderate to low, but a part of basic production. Secondary operations frequently needed, costs depending on requirements.
Cost of applied finish.	Usually about the same as for screw-machine products, but more polishing and buffing may be needed for plating.	Usually about the same as for die casting but skiving or burnishing often saves in polishing and buffing of parts to be plated.
Strength and ductility.	Nearly always inferior to steel but for corresponding nonferrous alloys the differences are often slight though generally favoring the wrought materials used in screw-machine products.	Much superior for steel and usually somewhat higher for those nonferrous alloys which correspond in a general way to certain die casting alloys.
Hardness and creep. .	Zinc and aluminum alloys range from 60 to 83 Brinell; brass 120 to 180. Zinc alloys subject to creep at atmospheric temperatures.	Steel 130 to 241 or higher Brinell. Copper alloys (brass, etc.) 10 to + 105 Rockwell B ($^1/_{16}$ in. ball 100-kg. load). Cold flow seldom significant.

* Costs vary, of course, with market conditions.

pieces already partly machined in prior operations, on the same or a duplicate machine, are loaded into the spindle collet and then machined, generally on the cutoff end, much as if the machine were using bar or tubular stock, except for the method of feeding.

Parts produced by die casting follow an entirely different cycle. Molten metal is fed under high pressure into a steel die and solidifies quickly; the casting is ejected almost immediately. The die may have a single or several cavities, all the same or all different as required; or several separate dies can be installed in the machine. After the casting operation, the parts must be cut or broken from the gate and the flash sheared or otherwise machined off.

In Table I are listed the factors that are usually given consideration when determining whether a product should be made by die casting or on a screw machine.

TABLE II.—PROPERTIES OF MATERIALS SUITABLE FOR DIE CASTING AND FOR SCREW-MACHINE PRODUCTS

Type of material	Tensile strength	Yield point	Elongation, %, in 2 in.	Reduction of area, %	Brinell hardness, No.	Machinability
	In 1,000 psi	In 1,000 psi				
Die-casting alloys:						
Zinc alloys	40–48	......	3.0–5.0	.....	74–83	Excellent
Aluminum alloys	30–36	......	1.0–2.0	.....	60–80	Fair to good
Magnesium alloys	30–33	17–22	1.0–3.0	.....	60–62	Excellent
Copper alloys (brass)	55–95	35–72	8–20	.....	120–180	Poor to good
Wrought nonferrous alloys* (for screw machine):						
Leaded brasses	38–55	16–27	20–60	. .	. . .	Excellent
Other brasses and bronzes	54–55	24–70	25–50	. .	. . .	Fair to excellent
Pure copper	32–35	10	45	...	.. ..	Poor
Aluminum	13†	5†	45	. .	23	Excellent
Cold-drawn annealed steels (for screw machine):						
Free-cutting steels	70–120	60–100	10–25	30–55	140–235	Good
Carbon steels	70–120	60–100	10–25	30–55	149–235	Fair
Nickel steels	80–125	60–110	10–25	35–60	170–235	Fair
Nickel chromium steels	85–110	70–100	12–20	40–60	179–228	Fair
Molybdenum steels	90–115	80–100	15–25	40–60	183–228	Fair
Chromium steels	90–115	70–100	12–25	35–60	170–241	Poor to fair
Chrome-vanadium steels	95–115	80–105	12–20	35–60	179–228	Fair
Stainless steels	65–90	35–55	25–60	55–70	130–185	Fair

* Soft grades. Hard grades have higher physical properties.

† Commercially pure aluminum in soft grade. Harder grades are stronger and machine freely. Wrought-aluminum alloys in heat-treated form having tensile strengths up to 60,000 psi or above are available and some such are even freer machining than the commercially pure metal.

Materials.—The alloys used to the greatest extent for die castings are those based on zinc. Next in importance are those based on aluminum. Alloys of copper base and those of magnesium base are growing in importance, but production is relatively limited. Alloys of lead and tin are readily die cast but are of small commercial importance. Ferrous alloys are not die cast commercially. In Table II are listed properties of these and of other alloys. Not including plastic rods and tubes, there is a far wider choice of materials available for screw-machine products than for die castings.

Weight.—Relative specific gravities of materials used for die castings and screw-machine products are given in Table I. Since the wrought materials for screw-machine products are stronger than those for die castings and the gravities are about the same, it follows that, for a given strength, a lighter screw-machine product can be made, especially in steel. But, if sections must be the same, the die-cast part will be somewhat lighter than a steel or brass screw-machine product. It is possible to further lighten the screw-machine product if full advantage is taken of the greater strength attainable through heat-treatment. The weight of metal required to make the part is likely to be greater for the screw-machine product than for the die casting, because of greater scrap loss.

Strength and Ductility.—Most cast materials are inferior to the corresponding wrought nonferrous materials in significant physical properties and die castings in general are not an exception to this rule. The commoner die-casting alloys are inferior to steel in strength and hardness and have lower softening and melting points. All die-cast forms are subject to some porosity, the location of which generally can be controlled so as not to come in highly stressed sections. Porosity is minimized and often so nearly eliminated by good casting technique that for a wide range of applications it can be disregarded. Naturally, wrought materials are free from porosity. If the die casting, which is always nonferrous, is compared with the steels most commonly used for screw-machine products, the difference in physical properties is still greater. It will be observed from Table II, however, that brass die castings can be had with a tensile strength greater than that of mild steel. It may be noted, also, that the differences as between wrought and die-cast nonferrous alloys in tensile strength are not very wide when the former are in the soft-annealed condition that is preferred for production on the screw machine.

It is also significant that the zinc alloys and those in brass are remarkably high in impact strength and quite high in ductility for cast materials. It is thus feasible to perform such operations as punching and spinning on zinc alloy and on certain other die castings, much as can be done on wrought metals. In both classes of product, however, a considerable proportion of the total output is for types of applications in which the strength and ductility of either die-cast or wrought materials are ample to meet requirements, since the parts are not highly stressed. When this is true, of course, the designer is likely to be more concerned with cost and other considerations than with mechanical properties.

There are available for screw-machine products materials that are more resistant to corrosion than any available for die casting, although both types include materials ranking high in this regard. Most ferrous materials are subject to red rust, whereas die castings are not.

In general, the die casting cannot be heat-treated with benefit in physical properties because it is subject to blistering at ordinary heat-treating temperatures. Many screw-machine steels can be heat-treated with important improvements in strength and hardness.

Hardness and Creep.—When hardness is desired, steel has a marked advantage over the nonferrous alloys used for die casting and those in wrought form used for screw-machine products. Hardness, however, affects machining properties and is sometimes a disadvantage; Table II gives some relative values. Zinc-alloy die castings and those of lower melting point are subject to slight creep, that is, cold flow, even at normal atmospheric temperatures. The effect of creep is seldom a factor in design unless rather high stresses are imposed, especially in bending and tension. Creep is said to be negligible or nil in die-cast alloys of higher melting point, and the same is probably true of all important wrought materials used for screw-machine products, as far as ordinary temperatures are concerned.

Physical Shapes.—There is a greater limitation as to shapes readily produced in the screw-machine product than in die casting. Die-cast products are by no means confined to shapes involving surfaces of rotation; variations in shape are almost unlimited. Parts can be die cast with either internal or external threads, although it is often more economical to tap than to cast internal threads. Cast external threads usually require chasing, especially when the die is parted in a plane through the axis of the threaded portion. Die castings are cast close to size;

hence, when machining is necessary, only light cuts are required. Flats, slots, cross holes, specially shaped contours, gear teeth, keyways, splines, and various projections that require from one to several extra operations in screw-machine products are readily made in the die casting.

Certain odd shapes or contours can be produced in screw-machine products, of course, by using rods or tubes drawn or extruded in special sections, as with flutes or gear teeth. Squares, hexes, and other standard shapes of bars are often employed to avoid cutting flats. The shaping or special contour, however, must come at the maximum diameter of the piece; or, if tubes with irregular holes be used, the shaping is at this hole and not at a larger diameter. These limitations do not apply to the die casting.

Die castings can often combine in one piece features that would require two or more parts made partly or wholly on a screw machine. Holes of almost any shape, whether axial or not, are readily cored in the die casting; whereas holes in the screw-machine product, unless formed in secondary operations, usually must be axial and circular.

Screw-machine products do not require draft, such as is commonly needed on a die casting, and can have undercuts in holes. Knurling of complete circumferences is not usually feasible on the die casting unless it be done in a supplementary operation after casting or unless a straight knurl can be used with serrations parallel to the motion of the die part that forms them.

Dimensional Accuracy.—In general, if a comparison is made between the casting as cast and the screw-machine product, the latter has a slight edge over the die casting in respect to the tolerances that can be held. If, however, the die casting is machined it can be held within the same dimensional limits as the screw-machine product. Between points formed in solid integral parts of the die, the usual as-cast limits on die castings in zinc alloy are ±0.001 in. per inch plus whatever drafts are required. If, however, the measurement is across a parting line or is affected by clearances in die parts having relative motion, ±0.003 or 0.004 in. is commonly allowed in addition to the foregoing tolerance. The limits are slightly wider for aluminum and for magnesium alloys, and somewhat wider still for alloys based on copper. There is, of course, a chance for further variations at the parting line unless the flash formed is trimmed or machined with considerable accuracy.

On screw-machine products, the general commercial practice is to hold diametral dimensions when marked in decimals to within tolerance of ±0.002 or 0.0025 in., and within ±0.003 in. on lengths unless closer dimensions are specified. If specified, diameters can be held to ±0.001 or even 0.0005 in. but this requires extra expense. Drafts needed on die castings are not required on screw-machine products, although machining is facilitated if shoulders are tapered rather than square.

Surface Smoothness.—Tool marks, usually left by roughing cuts on screw-machine products, can be removed by shaving, skiving, or burnishing. Die castings as cast in most alloys can have, when required, surfaces so smooth that they take a high buffed polish. Both die castings and screw-machine products can be produced with surfaces which require little polishing and only moderate buffing in preparation for plating.

Appearance.—This involves so many factors, some of which are intangible, that general conclusions are not easy to make and may be of doubtful value. Most screw-machine products have considerable luster whereas the die casting is usually frosted. Both types of products tarnish after a time when exposed to the atmosphere. Other factors, such as corrosion in service, and especially the rusting of steel, affect appearance often in a marked degree, but comparisons in this regard do not permit of satisfactory generalization. Shapes such as are here compared may be identical, but it is possible to produce in the die casting certain variations in surface contours usually not feasible in the screw-machine product and these variations may have a marked effect upon appearance.

Finishing Costs.—Costs of applied finishes are, in general, about the same for the two types of parts, but may favor the screw-machine product slightly in some instances, especially when an unusually smooth surface is needed, as for plating, or when considerable grinding is required to remove marks at parting lines on the die casting. Die castings are sometimes subject to slight surface porosity and often to some subsurface porosity, which may cause trouble in finishing, especially if high-temperature baking is required. With proper care in casting and in die construction, as well as in selection of finishing materials and baking schedules, however, such difficulties can be overcome.

Rate of Production.—Production rates for the die casting are likely to exceed considerably those for the screw-machine product. For small parts, similar to those produced by screw machines in general, the die-casting machine for zinc alloys runs about 200 to 300 cycles an hour minimum, with some machines running up to or exceeding 1,000 cycles an hour. Moreover, especially if total requirements are large, the die frequently has several cavities. In machines equipped for using unit dies, several dies can be run simultaneously. The machine cycles cited apply to zinc alloy in particular, the rate may be cut to one-third or one-fourth for alloys of higher melting point. It should be noted, however, that the rates given are for casting only and do not include fin removal or any machining, both of which involve separate operations after casting.

Rates of screw machines vary from about 30 to about 3,600 pieces per hour per machine, depending upon the size of piece, type of material used, number of spindles, and also upon the number and character of operations required. Often the piece is completely finished and ready for use, but, for some parts, secondary operations are required.

Tooling Costs.—These are likely to be higher for the die casting than for the screw-machine product, partly because it is necessary to make a die and usually tools for flash removal. For the screw-machine product, it is often possible to use standard tools; when special ones are needed, their cost is likely to be less than that of the die required for casting, although there may be exceptions, especially if special cams for actuating the screw-machine tools are needed. Considerable time and expense are often involved in keeping screw-machine tools sharp and for the maintenance of dies and trim tools for the die casting. For the most used zinc alloys, the maintenance on dies that are properly made is low, even for long runs; for alloys of higher melting point, especially for brass, the cost of die maintenance increases considerably.

Cost of Labor.—Labor cost is generally higher for the die casting because die-casting machines are not completely automatic, and flash must be trimmed and often other machine work must be done on each piece. Although the screw machine is fully automatic, some attention is required to check parts as to size and finish and, when adjustments must be made, expert setup men are needed. Setup time averages about 4 to 8 hr. on multiple-spindle screw machines and around 2½ hr. for single-spindle machines. Die changing on most casting machines does not require labor so highly skilled as for screw-machine setup. Casting-die changing ranges from about ½ to perhaps 4 hr. with the average around 2 hr. for dies of the size needed to make parts such as the screw machine commonly turns out. For the die casting, extra time is required, as a rule, to set up trim dies in a punch or arbor press. Special setups in other machines may also be needed for either die-cast or screw-machine products if secondary operations are required.

Material Costs.—These generally favor the screw-machine product provided soft steel rod or other low-cost steel rod can be employed and provided the loss in scrap is low. If seamless steel, tubing, special alloy steels, or nonferrous metals are required for the screw-machine product, material costs are likely to favor the die casting. Ingots for castings are lower in cost than corresponding nonferrous wrought alloys.

Waste.—Waste in scrap is lower with the die casting than for the screw-machine product because the former is produced close to actual size, with holes cored and with diameters as required. Gates, sprues, flash, and chips, as well as rejects, are remelted and reused without substantial loss. Whether bars or tubes are used for the screw-machine product, considerable metal is usually machined away. Steel scrap has a low value or none at all. Nonferrous scrap sometimes brings about one-third of the cost of the wrought material. Although scrap salvage may pay for the cost of machining on the piece, the loss is still an important factor in over-all cost.

Cost of Machining.—Machining costs for either product depend, of course, upon the number and character of operations needed to meet specific requirements. Machining, however, always represents a considerable part of the cost of the screw-machine product, although primary operations are done rapidly and at low cost. Secondary operations may cost as much as or more than on the die castings. Die castings, on the other hand, always require flash removal, and often machine operations done on the part increase the cost considerably.

Zinc alloys and magnesium alloys used in die castings machine as freely as brass in wrought form. Some aluminum alloys also machine freely, but others are intermediate in machining properties, as are some die-cast brasses. Certain brass die castings are rather hard to machine. In general, the differences in machining properties of die castings and of nonferrous wrought materials are slight, but for average pieces die castings machine more freely than the ferrous materials used for screw-machine products.

Conclusion.—Many factors should be weighed in arriving at a choice as between die castings and screw-machine products. Specific requirements often bar the use of one or the other. When either can be used, however, prices should be secured on both and then the one selected that promises to meet general requirements best. Study of the accompanying specific examples may provide some indications as to the weight to be assigned to the various factors.

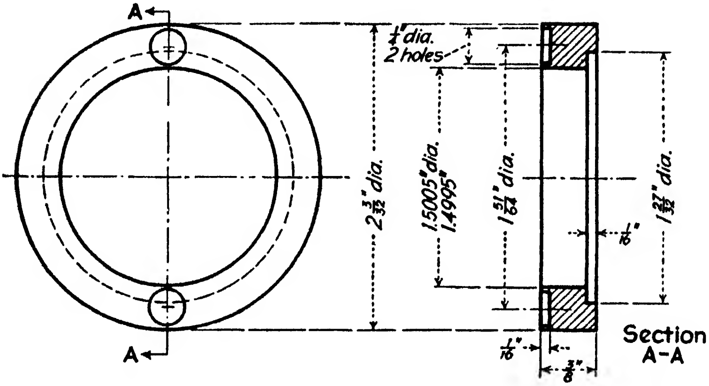

Fig. 3.—Retainer ring, once produced on the screw machine, is die cast at lower cost.

Existing conditions in the metalworking industry have prevented the author from securing more specific or an equal number of examples giving comparative costs favorable respectively to the screw-machine product and to the die casting. If accompanying examples appear more favorable to the die casting than to the screw-machine product, this is a coincidence and not intended, since repeated, though unfruitful, efforts were made to secure examples in which costs are more favorable to the screw-machine product than are those in the examples cited.

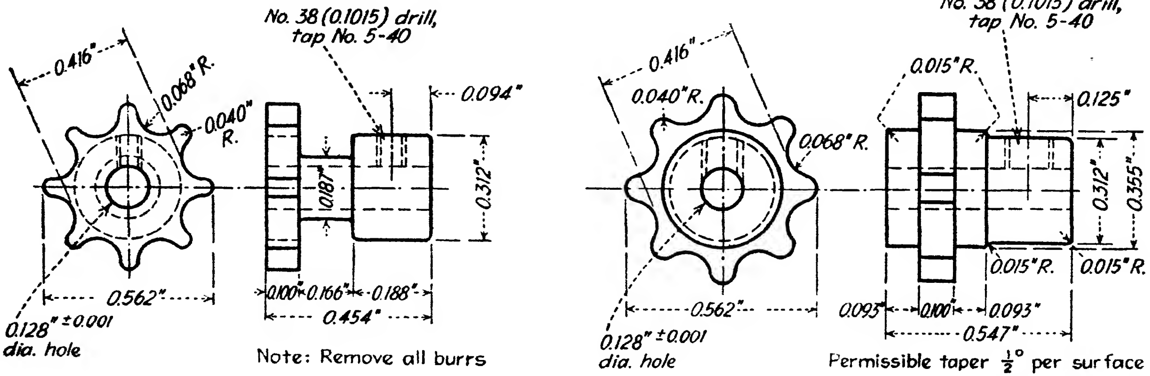

Screw Machine Product **Die cast Product**

FIG. 4.—Sprocket with hub as produced on the screw machine (left) and later, in somewhat modified form, as a die casting (right).

A threaded retainer ring (Fig. 3) with holes for spanner wrench was initially produced on a screw machine at a cost of 18 cents per piece; no data as to material used or tooling cost are obtainable. The ring is now die cast in lots of 1,000 at a cost of 3.5 cents per piece. The two-cavity die used cost $98. On the die-cast part, a 16-pitch thread is cut on the o.d. at a cost of 1.5 cents per piece, making the total cost 5 cents per piece. No other machining is needed. Neither the die casting nor the screw-machine product requires an applied finish. The chief advantage claimed for the die casting is its lower cost.

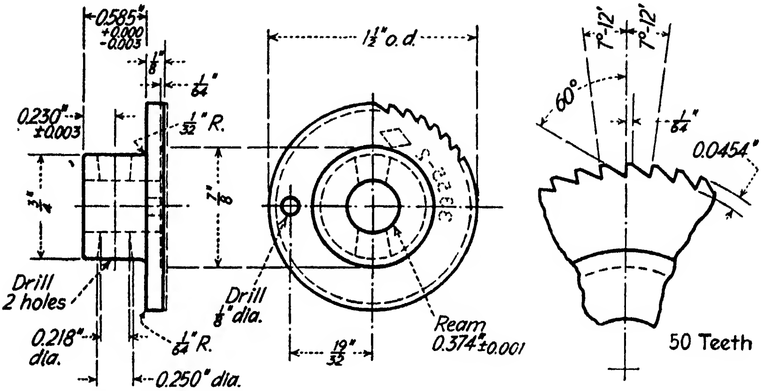

Double dimensions indicate draft; unless otherwise specified variation allowed plus or minus 0.010 on fractional and plus or minus 0.005 on decimal dimensions

Enlarged Detail of Ratchet Teeth

FIG. 5.—Die-cast ratchet wheel that cost much less in this form than when produced on the screw machine with teeth milled subsequently.

The sprocket with hub shown in Fig. 4 originally was produced by screw machine from brass pinion rod in lots of 33,000 at a cost of 1.7 cents per piece, of which 1 cent represented the cost of material. Nickel plating cost 4 cents per pound. When redesigned to avoid the undercut neck, the piece was die cast in zinc alloy, using a two-cavity die costing $205. Piece cost was thereby reduced to 0.7 cent; black-nickel plating is applied, costing 2 cents per pound. Redesign saved $100 on the first order for 33,000, besides paying for the die, and $300 on each subsequent reorder. Drilling and tapping of the setscrew hole in hub are understood to have been included in the cost figures given above.

The ratchet wheel with hub (Fig. 5) is produced in die-cast form from zinc alloy in lots of 10,000, the piece price including all machining required being 3.9 cents, the weight being 1.04 oz. Production is in a six-cavity die, five of the cavities being for other small parts of the same machine, produced simultaneously. An estimate, made by the screw-machine department of the same company that produces the die-cast part, of the cost of manufacture by screw machine from free-machining steel costing approximately 4 cents per pound, in lots of 5,000 is 10.3 cents each. This includes supplementary drilling operations and gang milling of teeth. In the die casting the teeth are formed in the casting operation, but flash has to be removed.

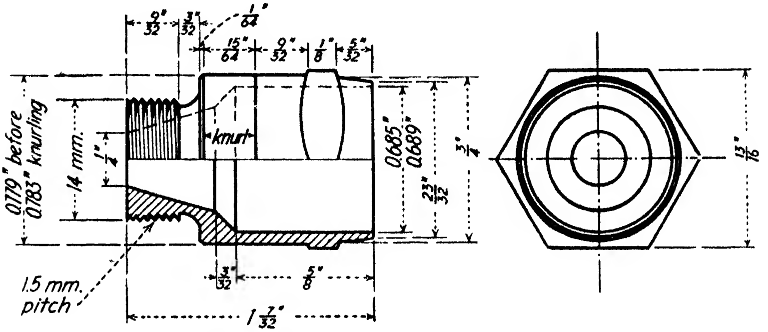

Fig. 6.—Spark-plug shell produced in steel on a screw machine. This part could be die cast in zinc alloy at lower cost but would not have the strength of steel.

A spark-plug shell of standard 14-mm. size (Fig. 6) is produced from S.A.E. X1112 steel $^{13}/_{16}$-in. hex bar stock, costing 4.5 cents per pound, in multiple-spindle automatic screw machines at the rate of 900 pieces an hour. In lots of 10,000 the cost is 3.75 cents per piece, and the application of a blued finish costs $1.25 per 1,000 pieces extra, making the total cost 3.87 cents per piece. If tooling cost, which is $50, is added, the total cost in lots of 10,000 is 4.37 cents per piece. A die caster estimates that this shell, produced in S.A.E. 903 zinc alloy costing 10.25 cents per pound, will cost 2.5 cents per piece in lots of 10,000, without an applied finish. Die casting would be done at the rate of about 500 pieces an hour using a two-cavity die estimated to cost $255. The piece price includes removing the flash and chasing the thread as supplementary operations. Total cost, including die cost, for 10,000 die-cast shells is thus 5.05 cents per piece. If, in both types of part, piece cost remains unchanged and lots of 100,000 were required, the total cost, including tooling, would be 2.75 cents per piece for the die-cast shell and 3.92 cents per piece for a shell produced on the screw machine. The screw-machine product would be stronger and probably slightly smoother and would also withstand higher temperatures in service. Spark plugs with die-cast shells, however, have been used successfully at least on an experimental scale in water-cooled engines. Although the steel shell weighs $\frac{7}{8}$ oz. in finished form, it requires $3\frac{1}{2}$ oz. of hex steel rod costing 0.983 cent to produce it, no allowance being made for a small credit for scrap recovery. As against this, the die-cast shell would require $\frac{3}{4}$ oz. of zinc alloy, costing 0.481 cent, with scrap loss substantially nil. Thus, although the steel costs less than half as much per pound as the zinc alloy, the larger amount of steel required brings the material cost per piece to more than double that for the die-cast piece.

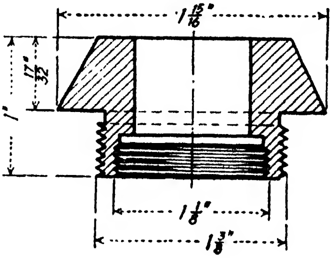

FIG. 7.—Tapered hollow plug produced on the screw machine but readily producible by die casting at somewhat lower cost if zinc alloy is used.

In the hollow tapered plug shown in Fig. 7, produced in a multi-spindle screw machine from S.A.E. X1112 steel bar, costing 4.5 cents per pound, the net cost was 7.76 cents per piece in lots of 100,000, or 10.52 cents per piece in lots of 10,000. The piece is finished in one cycle of the machine except for removing the burr thrown into the hole by cutoff tool which requires a supplementary operation included in the stated cost. Figure 8 shows the successive operations in six-spindle screw machines. Data on tooling cost are not given, but if a figure of $50 is set arbitrarily, the total cost including tooling would be 7.81 cents per piece in lots of 100,000 and 11.02 cents per piece in lots of

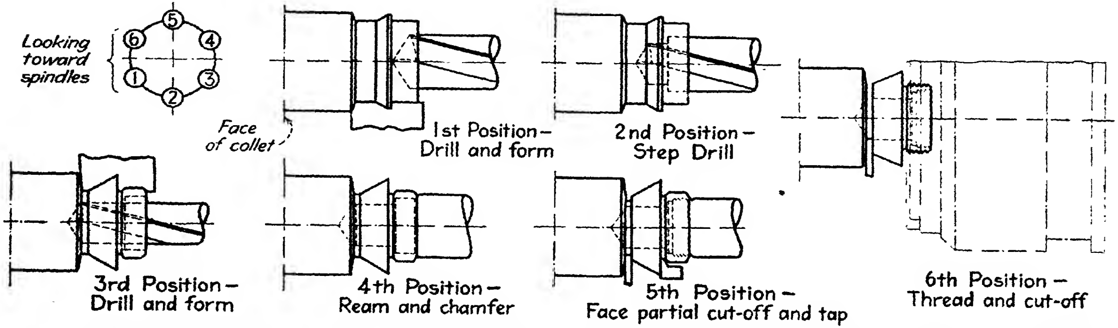

FIG. 8.—Diagram indicating the successive operations performed on the plug shown in Fig. 7, when it is produced in a six-spindle screw machine.

10,000. Including an allowance of ⅛ in. of metal for cutoff, approximately 0.95 pound of steel per piece is required.

A die caster gives the following estimate on producing this piece from zinc alloy costing 10.25 cents per pound, the approximate net weight per piece being 0.30 lb., making the material cost slightly lower than for the steel used in making the screw-machine product. The piece price, presumably including profit, is 7.0 cents per piece in lots of 10,000 and 6.75 cents in lots of 100,000. The charge for a two-cavity die for casting this piece is $295, making the total cost, tooling included, 9.95 cents per piece in lots of 10,000 and 7.045 cents per piece in lots of 100,000. Included in this price is the cost of cutting the recess back of the thread and facing the adjacent shoulder as well as chasing the external thread and tapping the internal thread for class 2 fits. Machined surfaces would be as smooth as for the screw-machine product, but other surfaces would have a normal die-cast finish.

CHAPTER XIV

COLD-HEADED OR SCREW-MACHINE PRODUCTS?[1]

BY HERBERT CHASE

Among the most rapid and useful machines for working steel known to the metalworking industry are the automatic screw machine and the cold header. Both kinds of machine are of great importance in certain types of production. Both can produce parts so nearly identical as to shape and dimensions that they are most difficult to tell apart. The screw machine is much the more versatile as well as more widely distributed or more generally available. It can be used with almost any bar stock capable of being machined but is most commonly employed with stock suited for easy and rapid machining. It depends, however, upon cutting metal away, which is often a rather slow as well as a wasteful process from the standpoint of metal economy, even though the waste is frequently justified by results in other directions.

As against this, the cold header is less versatile and less widely available, but it is exceedingly rapid and highly economical in metal, as loss in scrap is slight. It usually depends upon other machines for finishing operations, as, indeed, the screw machine does also, though perhaps to a lesser degree. But, in general, it can be made to work within the same dimensional limits. Materials used by the cold header must possess adequate ductility, but the range of materials usable is fairly wide and the materials preferred are no more specialized than are those preferred for the screw machine.

Although the screw machine is employed to turn out uncounted numbers of screws and some bolts, a large proportion of these are of a size or in a material not suited for cold heading or are required in quantities too small to justify the cost of tools for cold heading. In other words, the cold header gets a greatly preponderant share of the screw and bolt business in types requiring long runs, its

---

[1] In its original form, this chapter appeared in *Iron Age*.

great economy of material being a large factor in this business, as is also the rapid production. A similar, though not identical, condition applies in the case of other long-run parts, which can be made by either method. It might become identical if engineers and purchasing agents were more generally aware of the character of work the cold header can perform or if they were better acquainted with the economies of cold heading.

In preparing this chapter, the author gained the cooperation of experienced men of the Lamson & Sessions Company, large producers of cold-headed products, to gather examples of cold-headed parts known to have been produced at lower costs than if made on the screw machine. It is believed that examination of these specific examples is likely to point the way to economies in metal and in time.

Before going into details, however, the matter of relative tooling costs deserves brief discussion, and some mention needs to be made about the way in which cold headers operate and what they can and cannot do. Although the cold header must be equipped with a die, stock dies are available for many parts. Many such dies could be put to work were designs for the use of their product worked out or existing designs slightly altered to use these dies. New dies of common types, however, are moderate in cost, as most of the machining is simple and rapidly done. As against this, the screw machine can often use stock tools although the much-used forming cutters and some other tools, as well as cams, have to be made especially for many jobs. In some cases, the screw-machine tooling may cost as much as the tools for cold heading. In any event, tooling costs for the screw machine are seldom negligible and should be set off against those for the cold header in making comparisons.

Cold heading is done with wire, the equivalent of rod stock except that it comes in long coiled lengths that are run through a straightening device on the way into the header. The latter is a cold-forging machine that strikes the stock one, two, or three blows, depending upon the type of machine and dies used. Each blow either upsets or heads a part of the piece or else decreases its size by extrusion, that is, by driving it into a hole smaller than the diameter of the shank or the wire being headed. In other words, the metal is flowed rather than cut. Such operations as threading, tapping, pointing, slotting, and drilling have to be done on secondary machines, even sometimes in screw machines, then used as chucking machines, although such use is not frequently needed. Some cold headers, called "bolt makers," have heading, trimming, pointing, and threading stations into which the bolt is transferred automatically, but the number of such machines in use is limited.

Threads required on cold-headed products are nearly always rolled threads. These are said to be both stronger and smoother than cut threads, although opinions differ somewhat on these points. In any event, class 3 fits, regarded as difficult when cut on the screw machine, are produced by rolling, and exacting specifications such as are required in aircraft products, for example, are met. Thread rolling is often done, of course, on screw-machine products, occasionally in the screw machine itself. Several other secondary operations usually are required on cold-headed products, some of them being needed also if the basic product is manufactured on the screw machine.

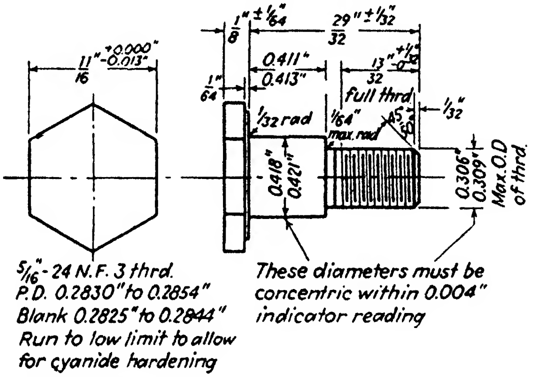

FIG. 1.—This cold-headed shoulder bolt costs 50 per cent less than if made on a screw machine. It is made of S.A.E. 1020 steel.

Illustrated in Fig. 1 is a cold-headed product typical of many rather conventional shoulder screws. It is produced completely in the header except for reducing the diameter for the thread. The cost, however, including the secondary operations, is about 50 per cent less than if produced by the screw machine, chiefly because of the saving in stock. Dimensions are readily held and the $\frac{5}{16}$–24 N.F. thread is a class 3 fit.

Another shoulder screw is shown, in Fig. 2, chiefly because the purchaser is aware that it can be made either by cold heading or on the screw machine and permits alternative constructions as to the head and also allows three options as to the steel that may be used. S.A.E. 1010 steel is suitable for cold heading, whereas

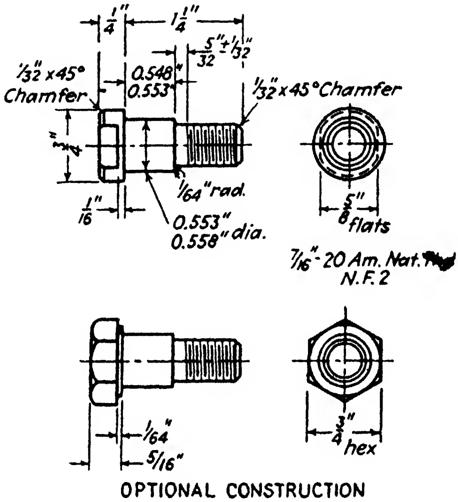

Fig. 2.—Optional designs of shoulder bolts for cold-heading or screw-machine production. Steel used is S.A.E. 1010, 1112, or X1112.

S.A.E. 1112 and X1112 are good screw-machine stocks. The hex-head design can be made complete, using hex stock, on the screw machine, but if the rounded head with flats were to be

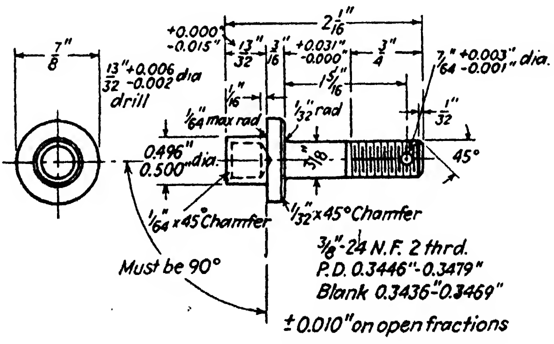

Fig. 3.—Cold-headed bolt with special drilled head. Steel used is S.A.E. 1020.

made on the screw machine, a separate milling (or equivalent operation) to form flats would be necessary. Either form can be cold-headed—and probably much more cheaply—chiefly because of the saving in stock but also because of saving a trimming operation.

The special bolt shown in Fig. 3, originally made with radial serrations or knurling on the side of the flange away from the threaded end might be regarded as a "natural" for the screw machine, partly because the projection next to the flange has to be drilled out, whatever method of construction is used. This operation would be done as one of those on the screw machine but separately on a cold-headed part. The latter also requires a separate shaving operation on the flange. Cross drilling is often done on stock-transfer attachments used with screw machines but is a separate operation on the cold-headed part. Despite these considerations, the cold-headed part (Fig. 3) is reported about 50 per cent cheaper than the screw-machine product, partly because of the great saving in steel, as ⅜-in. wire does the trick in cold heading whereas ⅞-in. bar is needed for the screw-machine product. Radial knurling is done as a part of the cold heading; it is not a separate operation and does not require a knurling tool, as the serrations are made in the die and are duplicated on each piece.

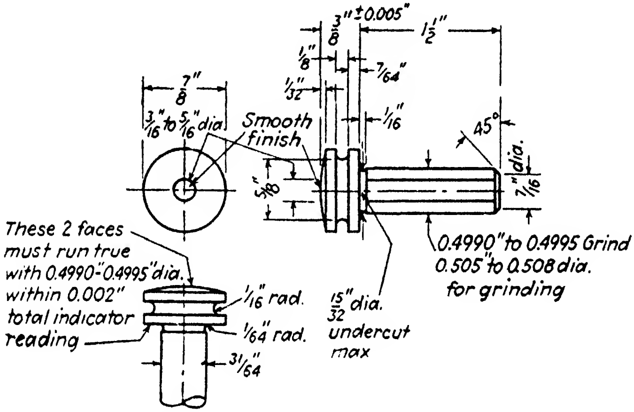

FIG. 4.—This part is headed, but the grooves in and below the head are turned. Steel used is S.A.E. 4140.

Although the piece with a circumferentially grooved head shown in Fig. 4 requires finishing all over after cold heading, it has proved to be about one-third cheaper in that form than when made on the screw machine because of more rapid production and saving in stock, which is optionally S.A.E. 3135, 3140, or 2340 nickel-bearing steels. However produced, the stem and the flat thereon have to be ground to hold the close limits specified. The grooves in the head and under it cannot be formed by cold

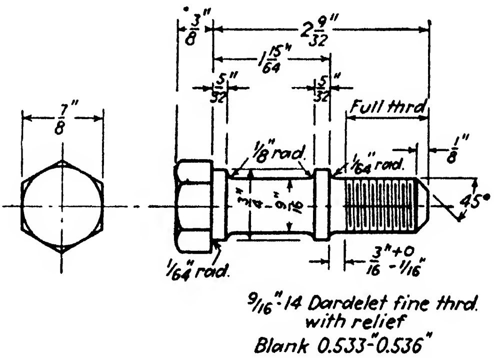

FIG. 5.—Special-headed bolt in which the necked portion is turned. Steel used is S.A.E. 1035.

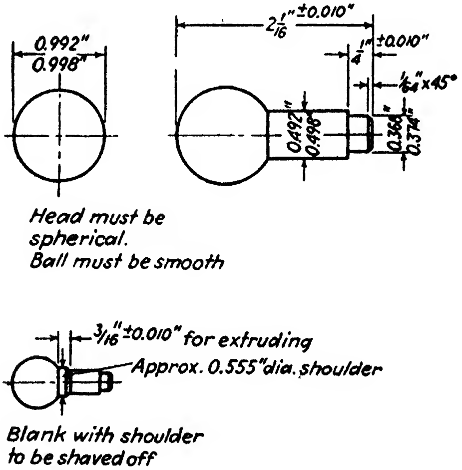

FIG. 6.—Ball stud headed as in small sketch and subsequently shaved. Steel used is S.A.E. 1020.

heading but are cut subsequently at the same time that the rest of the head is shaved. Such operations are done at high speed in an automatic shaving machine.

Parts, such as that in Fig. 5, which require a necked portion, are not produced entirely by cold heading, but the blank is so produced and the neck is cut subsequently in a shaver which, at the same time, reduces the diameter on which the Dardelet thread is rolled subsequently. A piece of this shape is cold-headed with a ¾ in. diameter shank, using ¾-in. stock on which the hex head is upset. There is some scrap in the shaving operations, but much less than if the piece were machined from ⅞-in. hex stock, such as would be required for the screw machine, and the cost is about 20 per cent less than for production by screw machine.

Products having heads forming a nearly complete sphere, as in Fig. 6, are often produced on the screw machine but can be made more cheaply by cold heading. That shown is 35 to 40 per cent lower in cost. In this case, the piece is made from stock of 0.555 in. diameter, as shown in the lower view, after which the shank is extruded to specified diameter, but leaving a shoulder of the stock diameter. The head, of course, is upset by the heading operation. Subsequently, the piece is chucked on the extruded diameter in the collet of a shaving machine fitted with forming tools which cut away the shoulder and shave the spherical surface.

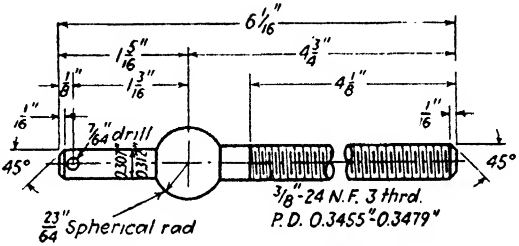

FIG. 7.—The ball on this bolt is produced by heading, and the short end is extruded.

A piece such as that shown in Fig. 7 is produced by heading from wire of approximately the pitch diameter of the long thread. In this case, the shank at the other side of the ball is, initially, of stock diameter and the ball is headed in the position shown. The short shank is then reduced to specified diameter by a separate extrusion. Pointing (chamfering) of the ends and cross drilling require separate operations, as does the shaving of the ball surface. Nevertheless, there is a marked saving in cost over screw-machine production, as the latter would require the use of stock at least 23⁄64 in. diameter with relatively slow removal of much wasted material.

In producing the piece shown in Fig. 8, 3⁄8-in. wire is used and the head upset is a cylinder 9⁄16 in. in diameter and 7⁄8 in. long. As the thread is rolled, it is necessary to reduce the diameter on which it is made, so that, after the operation, the crest diameter will be the same as the diameter of the stock. Reduction in diameter for rolling is done by extrusion. The square head is broached. Cost is somewhat below that for the screw-machine equivalent, as that too would require either broaching or milling the head square in a secondary operation and more stock would be needed.

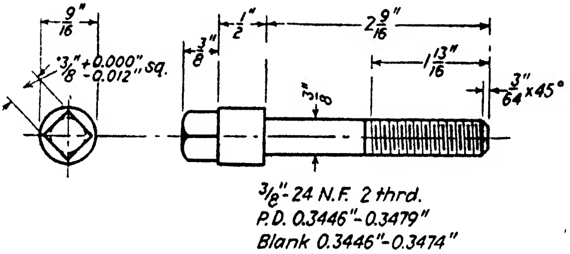

FIG. 8.—Headed product with small end extruded and square broached.

About 50 per cent reduction in cost resulted from converting the brake-adjusting part (Fig. 9) from screw machine to cold heading. In this case, the stock used is of 0.518 to 0.525 in. diameter and the blank is upset to form, at the center, a flange 1¼ in. o.d. and 3⁄32 in. thick with bosses on each side, as shown in the lower sketch. Subsequently, serrations are cut in the edge of the flange in a separate blanking operation, just as would be necessary in a blank produced by screw machine. As it is specified that the ends must not have an eccentricity greater than 0.010 in. total indicator reading, the ends of the blank are made oversize and are reduced by shaving the correct diameter for rolling the thread and to maintain the required limits as to eccentricity.

Although necked pieces, such as that in Fig. 10, are not commonly produced complete by cold heading, it is feasible to do so economically by the following means: Stock of 3⁄8 in. diameter is upset to form, in a single blow, the head of the piece, including the recessed spherical surface, leaving a long shank of stock diameter. Blanks thus made are reheaded at the other end to form a flange of 21/32 in. diameter, rounded as shown. This is

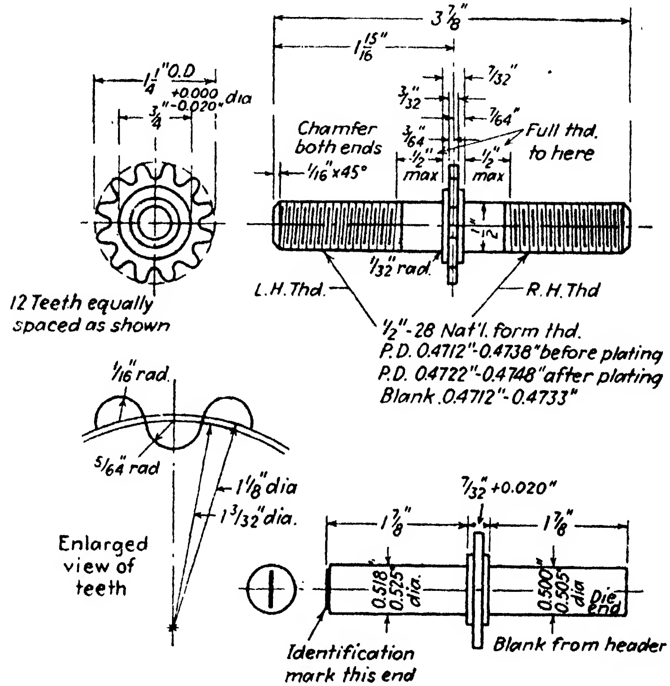

FIG. 9.—Brake-adjusting part with flange headed at center. Serrations trimmed later.

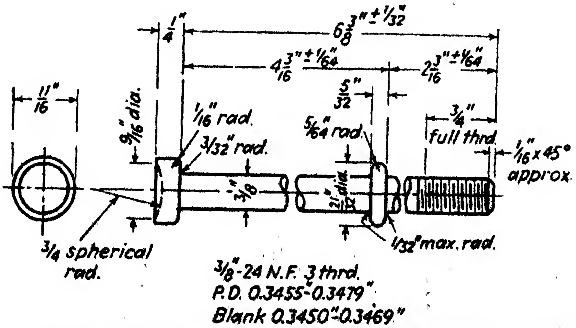

FIG. 10.—Part produced by heading and then reheading to form flange.

done in a semiautomatic open-die header and at the same time the end is extruded to the diameter for rolling the 3/8–24 thread which is made to class 3 tolerances. This is an aircraft part and is made from S.A.E. 1020 steel. To produce it by screw machine would require the use of stock at least $1\frac{1}{16}$ in. in diameter and

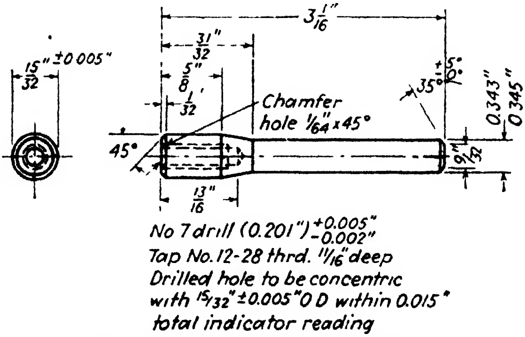

FIG. 11.—A simple-headed part in which the hole is afterward drilled and tapped.

result in much waste of material and about 75 per cent higher cost.

A part such as is pictured in Fig. 11 is simply produced without a great waste of material in the screw machine, yet reports show a

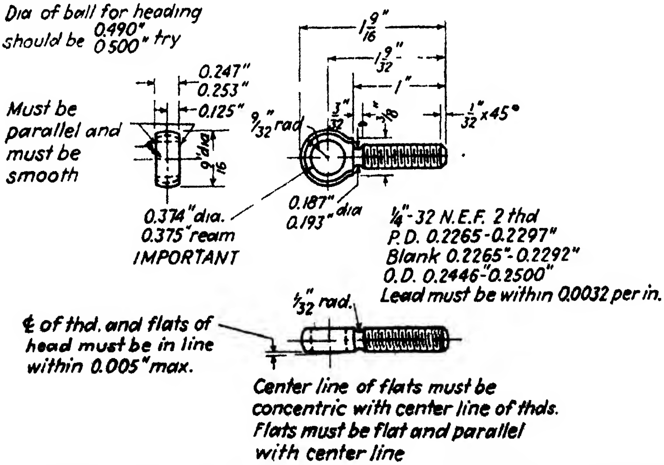

FIG. 12.—Headed eyebolt for aircraft applications. Steel used is No. 410 stainless.

50 per cent saving by production in a header from stock 0.460 in. in diameter. There is only slight upsetting of the large end and the shank is reduced in diameter by a double extrusion. Drilling, tapping, and chamfering the end are secondary operations.

An eyebolt of the design in Fig. 12, when made by cold heading, costs about half as much as for screw-machine production, even though, as on the screw machine, the head is formed in spherical shape, the flats are milled, and the cross hole is drilled and reamed in secondary operations. The neck below the head is turned on the headed blank at the same time that the ball is shaved. Both types of parts require hand polishing of the head on a wheel to remove scratches, so as to meet exacting aircraft specifications. In the case of eyebolts, which are made, as in Fig. 13, with much less exacting tolerances and in which the head is upset in a section that is nearly square and is afterward thinned at the eye portion (the radius at the end being formed in the heading), costs are still lower in proportion than for screw-machine equivalents.

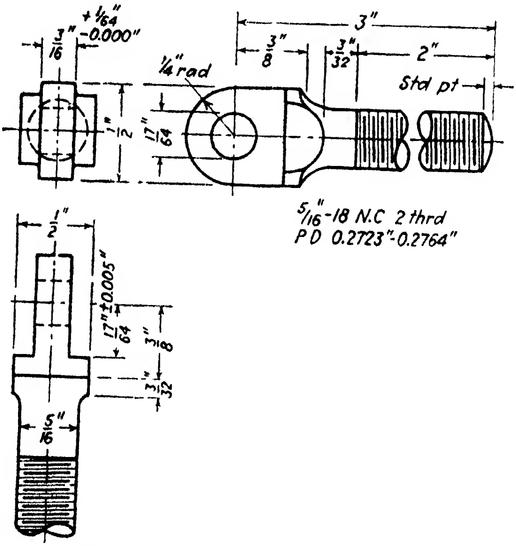

FIG. 13.—Eyebolt made by heading, the flats at the eye being broached.

Parts with an eye well away from the end, as in Fig. 14, are not difficult cold-heading jobs but cost much more if made on the screw machine. In this piece, the wire is of 0.330 in. diameter and a near sphere is upset to form the eye. This portion is subsequently flattened in a press to give the specified thickness of the area around the hole, which is later drilled. The drilling and the slotting are secondary operations, as they would be in a screw-machine product, which would have to be made from stock of about twice the diameter used for heading and would involve a high scrap loss as well as slow production.

Space limitations do not permit going into details as to cold-headed parts having heads of odd shape, some of them non-symmetrical in reference to the axis of the shank. Figure 1 in Chap. VII shows several such parts, some of which cannot be produced at all on the screw machine and none with the economy possible in cold heading. Upset heads can be pointed, beveled, serrated on the underside, and otherwise shaped in an irregular way. Heads can even have eccentric bosses below them or be eccentric themselves.

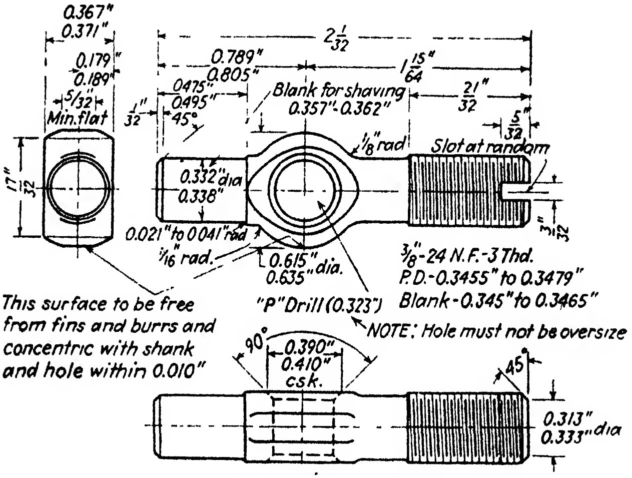

FIG. 14.—Headed product with eye formed near the center and later flattened in a press.

Many nuts of different designs are also produced by cold heading, starting with wire stock not much larger in diameter, as a rule, than the hole ultimately made in the nut. As this stock is flattened, its exterior is changed, as a rule, to a square or hex shape and a depression is made to force some of the metal where the hole comes to flow outward. Finally, the remaining metal in the hole is sheared out by punching out a slug, which is the only scrap formed except for that removed in subsequent tapping. Nuts for special purposes have a lip at the top to be spun over and thus fasten the nut in a square hole in sheet metal.

Many other special shapes of nuts are produced, some of them not capable of duplication in the screw machine. Flanged nuts are readily cold-headed. Production is rapid and economy in metal is high.

Although the foregoing may appear to put the screw-machine product in an unfavorable light, its utility is too amply demonstrated to be open to question for an exceedingly wide range of parts. The screw machine can, of course, produce many parts that cannot be reproduced by cold heading. Many that can be cold-headed in blank form require so much work in secondary operations (especially inside operations) that production on the screw machine is more economical. It has been, however, the purpose of this chapter, for reason stated, to emphasize the reverse aspect of the matter.

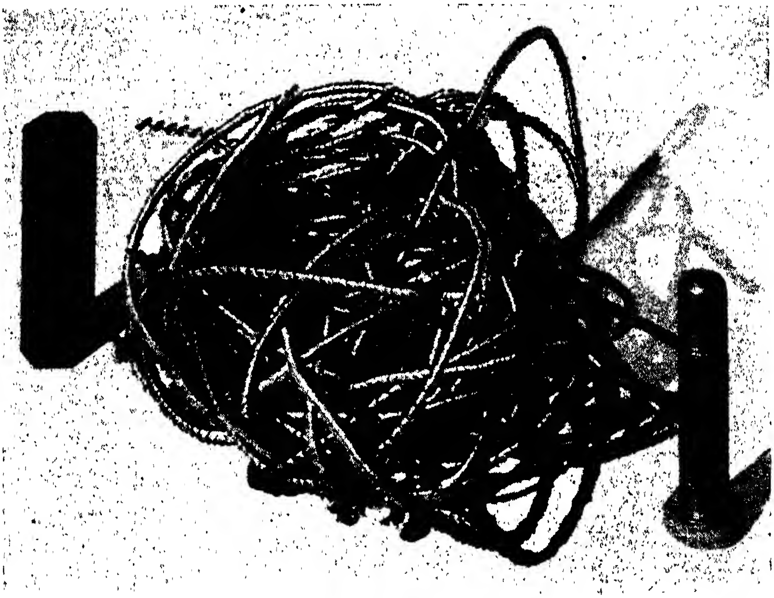

FIG. 15.—The ¾- by 6-in. cap screw here shown weighs 849 lb. per 1,000. If produced by screw machine 1,639 lb. of hex steel are required; hence the total scrap loss is 790 lb. In producing the same part on a cold header in two blows, 880 lb. of steel are required, the scrap being only 31 lb. total, occasioned by trimming the head from circular to hex shape. There is thus a saving of 759 lb. of steel in producing the cap screw by cold heading.

Naturally, both types of machines have their advantages and limitations. The cold header, for example, rarely handles stock over 1 in. or less than $\frac{1}{16}$ in. in diameter or over 8 in. in length, whereas the screw machine often works well outside these limits. Both types of machines are well established on a sound economic basis and in the long run will, or already have, gained ascendency where their advantages are put to best use and their limitations are avoided.

CHAPTER XV

DIE CASTINGS AND PLASTIC MOLDINGS COMPARED

By Herbert Chase

Difficulties beset any generalization in comparing die-cast with plastic-molded parts, because so many diverse considerations enter. There are numerous types of material for both classes of parts. These types vary greatly in cost and have wide differences in physical properties. Although some generalizations are here made, it should be understood that certain exceptions are to be found. The properties listed in Table I should prove helpful in making a choice between die castings and plastic moldings, but more specific comparisons are often necessary.

Materials Available.—Most plastics of a given type are available in numerous grades and many colors. In die castings, there are usually two or three alloys of each base metal that are employed for all but exceptional uses. To simplify the discussion, comparisons here made are confined, except where otherwise stated, to the most widely used materials. These are zinc alloy for die castings and phenolic plastic for moldings, which, in each category, usually rank lowest in cost per piece (except for some cold-molded plastics) and high in most significant properties.

Cold-molded bituminous plastics cost least per pound. They have some excellent properties and are very rapidly molded. But their strength is low, their finish not so good as other plastics, their gravity high, and they have to be baked subsequent to molding.

The ureas, like the phenolics, harden permanently when molded and are similar in many properties. They cost more and are used chiefly in white or where light tints and translucency are desired. Rubber and the little-used soya and shellac plastics are not considered here. All the remaining plastics of significance are classed as thermoplastics, which harden on cooling but are softened again if heated to or near the molding temperature.

TABLE I.—COMPARISON OF ADVANTAGES AND LIMITATIONS OF DIE-CAST AND MOLDED-PLASTIC PARTS

	Die castings	Molded plastics
Materials available	Two or more alloys of each of following base metals: zinc, aluminum, lead, copper, magnesium, and tin.	Various types of acrylic, bituminous, cellulose acetate, ethyl cellulose, phenolic, shellac, soya, styrene, urea, and vinyl materials, among others.
Specific gravity	1.83 (magnesium) to 10.65 (lead).	1.05 (acrylic) to 2.09 mineral filled (phenolic).
Strength	Generally superior—including tensile, compressive, bending, and impact.	Generally not so strong for equal sections but sometimes superior on an equal weight basis.
Effect of heat	Generally of no significance up to 250°F. for zinc and up to higher temperatures for aluminum and brass; lower for lead and tin.	Distortion from 120°F. upward and softening from 140°F. upward for thermoplastics. Most others distort or discolor from 160 to 240°F. Some usable to about 450°F. maximum.
Heat conduction	High.	Low (an advantage in some applications).
Electrical properties	All conductors.	All dielectrics.
Malleability	Good to poor.	Usually nil at room temperature.
Light transmission	All opaque.	Cheaper materials opaque, others opaque, translucent, or transparent.
Smoothness of surface.	Can equal moldings in some alloys—often not so good, but suitable for applied finish.	Usually excellent.
Complexity of form	Often extreme and more complex than feasible with plastics.	Often complex but coring more limited than with die castings.
Variations in section thickness.	Nearly unlimited, ranging from about 0.015 in. to almost any desired maximum in important alloys, even in same casting.	Can vary widely as between different moldings but variation is often limited in a single molding.
Dimensional accuracy	Generally better than moldings, ±0.001 to 0.003 in. per inch are commercial tolerances.	Not so good as die castings; will sometimes warp, ±0.005 in. in 1 in. are commercial tolerances.
Appearance	Most shapes and details on par with molding. Color and gloss (as cast) not so good as moldings.	Superior in color, gloss, transparent and translucent effects. On par in shape and details.
Applied finishes	Wide range available, including plating and organic both baked and air dried. No finish needed on large proportion of mechanical parts where appearance is not a factor.	Usually none required. Many available if needed.
Cost of dies and molds.	Likely to be lower.	Likely to be higher and to involve higher maintenance costs.
Production rate	Usually much higher especially as compared with compression moldings.	Usually much lower for compression moldings and considerably lower also for injection moldings.
Cost per lb., (materials only).	8¼ cents for zinc alloy to about 30 cents for magnesium, and about 40 cents for tin.	Cold-molded, low, general-purpose phenolic, 12 cents minimum. Other plastics vary from about 16 cents to $1.00 or more per pound.
Cost per piece (no applied finish).	Often lower, but some exceptions depending in part on cost of materials compared and section thickness used.	Sometimes lower, but often higher, although difference is frequently offset by savings in finishing cost when die casting compared requires an applied finish.
Waste in scrap	Small and usually negligible.	Often considerable.
Cost of machining	Likely to be lower but fin removal often costs more.	Likely to be greater when required but may be offset by lower cost of fin removal.

Thermoplastics have become much more important since the advent of injection molding but their cost per pound ranges from about 30 cents minimum (for black) up to a dollar or more for light translucent or transparent forms. Thermoplastics are used chiefly (1) to gain special color effects, transparency, or transluency, or (2) where injection molding results in economy in molding cost, or where both (1) and (2) apply. Cellulose acetate, except for shellac and perhaps rubber, is the cheapest thermoplastic employed for molding and has gained widest use, especially for injection molding. Cellulose nitrate, which is similar in appearance and in some other respects, sells for about the same or at a slightly higher price and enjoys about an equal or greater sale, is not suited for injection molding, and is used chiefly in sheets, rods, and tubes, some of which are cut into blanks for compression molding.

For die casting, zinc alloys rank first in commercial importance, aluminum alloys second, and copper alloys (brass) third.[1] In cost per casting, usually the same order applies, with zinc lowest. Magnesium alloys are relatively new in die-cast form but are growing in importance. Lead and tin alloys, being inferior in physical properties, are confined in use chiefly to special applications in which certain types of corrosion resistance are primary requisites.

Specific Gravities.—The specific gravity of magnesium alloys is lower than that of the heaviest plastics, and that of aluminum about on a par therewith, but the bulk (perhaps 90 per cent) of all plastics used are lighter than any die-cast alloys. For this reason, where light weight is essential plastics deserve consideration.

Tensile Strength.—Only the unimportant lead and tin die-casting alloys are below 32,000 psi, whereas 13,000 psi is about the maximum for a molded plastic, and the majority range around 6,000 psi. As compared to this, the zinc alloys range from 43,000 to 48,000 psi, the aluminum alloys from 29,000 to 38,000 psi, the magnesium alloys from 30,000 to 33,000 psi, and the brass alloys from 55,000 to 95,000 psi.

Compressive Strength.—The maximum for molded plastic is 36,000 psi and 18,000 psi is quite common. This compares with

---

[1] Since this was written, the use of magnesium for die casting has increased, and such castings may now rank third, with brass fourth.—EDITOR.

60,000 to 93,000 psi for die-cast zinc alloys. Copper-base alloys doubtless run much higher and other alloys lower than the zinc alloys in compressive strength, although specific data are lacking.

Impact Strength.—Strictly comparable data are lacking but 2.4 ft.-lb. Izod and 3.1 ft.-lb. Charpy both on ½- by ½-in. notched bars are the highest authoritative figures the author has been able to find for any except certain little-used rubber-base plastics. One ft.-lb. Izod is uncommonly high for most of the plastics that are used in large quantities. Die castings, on the other hand, show Charpy impact figures for ¼- by ¼-in. unnotched specimens of about 10 ft.-lb. maximum for aluminum, about 18 ft.-lb. for zinc, and over 36 ft.-lb. for brass. In other words, plastics generally are much more brittle than die castings, the zinc and brass alloys especially, which are not only tough but malleable.

Heat Effects.—These are not often of significance with die castings but sometimes have to be given consideration. Thus, zinc alloys are not recommended for prolonged use above 250°F. Aluminum alloys withstand prolonged use at temperatures up to 600°F. Some alloys usually classified under "brass," such as aluminum bronze, can be used safely under certain conditions up to 900°F., whereas other brasses oxidize and scale at this temperature. In some alloys used for die casting, elevated temperatures affect physical properties, such as creep and hardness; hence it is best to investigate each alloy considered before making a selection for an application in which elevated temperatures are encountered. As to plastics, certain phenolic types can withstand, at least temporarily, temperatures up to 400 or 450°F., but charring results if the temperature is much above this and warpage of phenolic moldings often occurs at or below 240°F. The maximum continuous temperature considered allowable for urea moldings is 160°F. and even this may result in warpage, especially if the heating is localized. For thermoplastics, 140°F. is usually the maximum allowable and the figure may be lower, as softening usually starts at about this temperature and distortion sometimes occurs at 120°F. Being poor conductors of heat, plastics are pleasant to touch and make good handles within allowable temperatures. All die castings are much better heat conductors than plastics; hence they are usually cold to touch.

Electrical Properties.—Electrical properties favor the die casting when a conductor is required, and plastics when a dielectric is needed. Under certain conditions, either may be used as an insert around which the other is molded or cast.

Malleability.—This is absent in molded plastics (unless the temperature be raised to the softening point, in thermoplastics) but is found in all die castings.

Creep.—While no comparative data are available on the various die-cast materials under discussion, it can be said, in general: (1) that more consideration must be given to this factor in the case of the thermoplastics than for any of the other materials; (2) that creep is a factor limiting the use of lead and tin die castings and that sometimes, particularly where elevated temperatures are to be encountered, it must be taken into consideration in designing zinc-alloy die-cast parts, especially if the support of high continuous loads is a primary factor or if high bending stresses are involved.

Transmission of Light.—Light transmission is an important consideration in some applications of plastics and, in some materials, is said to be superior to that of glass. This property permits of certain uses of plastics in lighting and optical effects for which die castings are not applicable.

Surface Smoothness.—Surface smoothness, especially as it affects finishing cost, is a primary consideration in some parts and of little or no significance in others. Flow marks, draw marks, and other surface imperfections sometimes occur on both types of part. Molded plastics often show what is termed "orange peel," a slight irregularity in the surface, and die castings often have a splattered look and slight surface pores, but these effects can be avoided by proper die construction and care in molding and casting.

Form Complexity.—Complexity of form, not to be duplicated by other rapid production processes, is characteristic of many die-cast and molded-plastic products but the complex side coring, often done at several odd angles in die castings, has yet to be matched in molded plastics, although some simple and relatively shallow side coring is done. With the advance of injection molding, more complex coring is being done and the molder may yet produce parts as complex as those made by die casting.

Variation in Section Thickness.—In die castings, very abrupt changes in section are permissible although gradual changes are recommended, as in other castings. Sudden variations in section are more likely to give trouble in the molded part, especially when the latter is in a thermosetting plastic, as thin sections may be overcured if the thick ones are cured fully; or, if the thin sections are properly cured, thick ones may be left hard on the surface and pithy below the surface. Cracking and/or distortion is likely to occur in moldings with thick and thin sections because the heavy sections tend to shrink more than the thinner ones.

Section thickness of parts, designed for the same service and thus (ideally, at least) of equal strength, can be less with the die casting than with the molded plastic, because the die casting is much stronger, section for section. This gives more space inside a hollow part having the same outside dimensions. It does not follow that the molding, if made with thicker walls to give equal strength, will necessarily be heavier, as the lower specific gravity of the plastic may more than offset the added thickness. Also, a thicker wall may yield added stiffness, which may be advantageous. Much depends, however, on which plastic is compared with which die-casting alloy.

Dimensional Accuracy.—This tends to favor the die casting, partly because the molded part undergoes more shrinkage after removal from the mold. It is necessary to cool some moldings over forms or in clamps to avoid warpage and to minimize dimensional changes, a practice not required with die castings. Commercial tolerances on ordinary phenolic and urea plastic moldings are ±0.005 in. on dimensions of ½ to 1 in. measured parallel to the mold parting and double this at right angles to the parting. With acetates, about 20 per cent greater tolerances are allowed. In die castings, the tolerances as determined by fixed dimensions of the die, are ±0.001 in. per inch for zinc, tin, and lead alloys, ±0.002 in. per inch for aluminum alloys, and ±0.003 in. per inch for brass. As with plastics, dimensions measured across the die parting or as between parts of the die having relative motion require a greater tolerance than those determined by fixed portions of the die, but in all instances (as the figures given show) the die-casting tolerances are closer than those for molded parts. Significant dimensional changes often occur in molded parts (other than normal expansion and contraction with changes in temperature) whereas, with modern die-casting alloys, such changes are nearly always negligible.

Cost of Finishing.—Finishing cost usually tends to favor the molded plastic since, as a rule, being already in the desired color, with a natural finish that is highly resistant to corrosion and possessed of requisite luster, it needs no applied finish. This is important, as finishing costs on a die casting sometimes equal or exceed the cost of the casting itself. If, as sometimes happens, the part must be given an organic finish, whether it is a die casting or a molded plastic, finishing cost is then about on a par.

Appearance.—Appearance, as related to parts coming from die or mold and without applied finish, tends to favor the molding, especially on the score of color. Smoothness and detail as to shape, in general, are on a par. Besides color, the molded plastic can be produced in mottled effects and different degrees of transparency or translucency, sometimes giving it a further advantage in appearance.

Resistance.—Corrosion resistance and freedom from chemical attack are exceptionally high in plastics, as they are generally inert chemically. Practically all are affected little, if any, by mild acids and alkalies, and some resist strong alkalies and acids. Acids and alkalies attack most die-casting alloys and all are subject to some surface corrosion.

Costs.—Cost of dies and molds is generally lower for the die casting than for the plastic molding and is almost certainly so on a basis of equal rates of production. Where the materials used for the dies machine with equal ease, the cost of sinking identical cavities for die casting and molding, respectively, is equal. But, where large production is involved, the mold for plastic will require more cavities, with correspondingly higher cost, because the molding cycle is much longer than the die-casting cycle. For zinc alloys and those of lower melting point, dies do not have to be hardened (although they are often hardened, sometimes before machining, for long-run work), whereas molding dies usually require hardening to resist abrasive action. Hardening after machining increases cost, as warping may result and polishing is then usually increased.

Molding dies, in general, also have to be heavier than those for die casting, as high localized pressures are sometimes encountered, especially in compression molding, and the pressures applied are higher than in most die casting. It is frequently necessary to spend more time in polishing plastic molds than is required in casting dies. Finally, in die casting, it is often feasible to use combination dies to form several differently shaped parts of different sizes simultaneously, and also to employ so-called "unit" dies with individual cavity blocks quickly replaceable. These economy expedients are not feasible in compression molding and are less applicable, if feasible at all, in injection molding.

Rates of Production.—Production rates are almost always higher in die casting than in molding. Casting cycles range from about 4 sec. for small parts on automatic machines up to about 1 min. for large parts such as one-piece motorcar radiator grilles. Compression molding cycles have, in certain extreme cases of small parts, using preheated material, been reduced to as little as 18 sec., but a 1-min. cycle is exceptionally fast and cycle time ranges upward to 10 min. or more, with the average perhaps 3 min. In injection molding, a higher rate of production is attained, but the cycle is seldom as short as 10 sec. and runs up to at least 1 min. for the larger molded parts which are commonly limited to a maximum of about 2 lb. in weight, even on unusually large machines.

The slower cycle in molding necessitates (for a given rate) more or larger machines, or both, and a higher labor charge per piece. An exception to this rule is found in a few small moldings, such as bottle caps, which can be produced in large molds having as many as 150 to 200 cavities. For such pieces the cycle is short (for compression molding), and the large number of parts per cycle yields a high rate not duplicated in die casting, where the number of cavities per die is more limited. The foregoing comments do not take into consideration the process of cold molding, which, though quite rapid, is rather limited in scope and necessitates baking subsequent to molding.

Operations, such as flash removal, that must follow molding and casting have a bearing on the rate of producing finished pieces. Flash is usually thinner on the molded part and usually may be more easily and rapidly removed than the flash of die castings. But any work that requires machining, such as the common operation of tapping, is likely to be more difficult and more costly on moldings than on die castings.

Cost of Materials.—The lowest cost molding materials in common use are the general-purpose phenolics,[1] which have averaged about 12 cents per pound for several years. Other plastics range upward to a dollar or more per pound. Zinc alloys are the lowest cost materials for die casting in general use, the price having averaged approximately 8¼ cents per pound over a period of several years. Other die-casting alloys range upward to about 30 cents per pound for magnesium to about 40 cents per pound for tin.

Conclusion.—General conclusions are necessarily subject to the many qualifications covered in the foregoing paragraphs. It may be said, however, that both types of product possess remarkable utility. Both types of parts are well suited for many forms of housings and for various decorative applications in which appearance is a primary consideration. Where either can be used, the engineer should weigh the relative advantages and disadvantages, compare costs, and then use his best judgment as to which type of part best meets requirements. A study of actual comparative costs as given in accompanying examples is likely to be helpful.

In the covers for radio tuning device shown in Fig. 1, over-all dimensions are about 5⅛ by 6¼ by 1¼ in. Average section thickness is about 0.040 in. For part die cast in zinc alloy, the total cost of die and tools for flash removal was $918 (die alone cost $730). Cost of castings in lots of 25,000, 11 cents per piece. The die has a single cavity and required 5 weeks to make. Castings are produced at the rate of about 125 per hour. No finish is required. The piece weighs 7.1 oz. To secure some transparent samples in cellulose acetate for demonstration purposes only, the same die used for the die casting was polished at an added cost of $80 (40 hr. work) and was used in an injection molding machine to turn out between 500 and 1,000 moldings. The latter cost 13 cents each (or were figured to cost this amount in larger lots) with production at the rate of 74 per hour. The molding, which is a duplicate of the die casting except for the greater shrinkage, weighs 1.44 oz. Purchaser states that the molded part was not considered for production because it is sensitive to changes in temperature and humidity and is too soft. Moreover, a metallic housing was required for shielding

---

[1] Except for some cold-molding types having limited applications.

against motor noise. The die casting was selected for production rather than the molding because of the simpler assembly, which was made possible by including several bosses and ribs to support parts of the mechanism. Use of parts of transparent cellulose acetate make it possible to see parts within the housing without removing the cover. With polishing (essential for a transparent molded part) the added cost for the die alone is $80, or an increase of about 11 per cent over that for the die-casting die only, but had it been desirable to use plastic in production some saving on cleaning tools might have resulted.

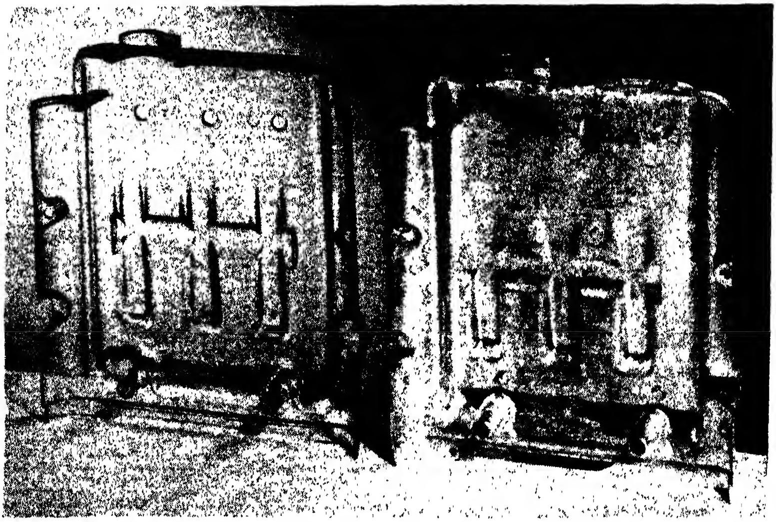

FIG. 1.—Covers for radio tuning device, that at left being a transparent molding, used for demonstration purposes only, and that at right being die cast in zinc alloy at lower cost.

Over-all dimensions of the clock housing illustrated in Fig. 2 are about 5½ by 5½ in. Average section thickness is $\frac{1}{16}$ in. For part die cast in zinc alloy, the total cost of die and tools for flash removal was $960. Cost of casting in lots of 25,000 was 14 cents each (without applied finish). The single-cavity die required 3 weeks to complete. Casting production was 175 per hour. Cost of plating in chromium was 30 cents each. Weight of casting was 14 oz. Same piece figured for production in urea plastic: cost of single-cavity mold $1,025; cost of molding in lots of 25,000, 28 cents each. Five weeks required to make

FIG. 2.—Clock housing produced as a chromium-plated die casting at a somewhat higher piece cost (as plated) than for molding, but the latter gave trouble from breakage and was subject to more variation in dimensions.

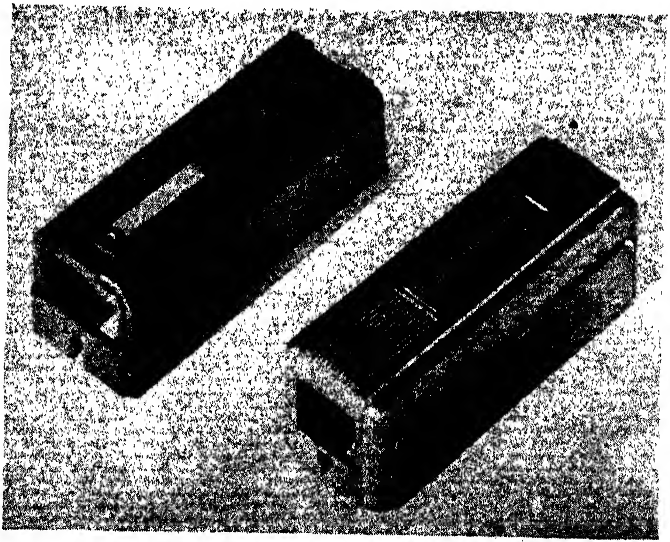

FIG. 3.—Thermostat housings as molded (*left*) and die cast. Parts are not exact duplicates but are nearly the same size. Both receive a spray finish. Die casting is stronger and thinner but weighs more and is not a dielectric.

mold. Rate of molding is given as 40 to 50 per hour, which is probably an error, as urea moldings of this size are seldom produced in a cycle of less than 3 min. No applied finish was required. Advantages cited for die casting are: important dimensions held within 0.0005 in.; any type of finish can be applied; about 95 per cent less breakage in transit.

The thermostat cover shown in Fig. 3 was die cast in zinc alloy and also molded in black, phenolic plastic. These parts are not identical in design but are about the same size. Over-all dimensions are approximately 4¾ by 1¾ by 1^{11}⁄$_{16}$ in. Section thickness for die casting averages approximately 0.045 in. and for the molding approximately 0.075 in. Total cost of die (single cavity) for casting and cleaning tools was $825, which included engraving to provide thermometer scale markings not provided in the mold. Moldings therefore require addition of separate scale plate, which is not needed in the die castings. Total cost of two-cavity mold for plastic was $835. Each required 6 weeks to make. Total number of parts estimated was 25,000 for each material. In lots of 2,500, the piece price was 8.9 cents for the die casting and 12.99 cents for the molded part. The die casting weighs 4¼ oz. and the molded cover 1¾ oz. Approximate number of parts die cast per hour was 175; the rate for molding production was not given. Both die-cast and molded parts were sprayed with lacquer, the die casting receiving three coats at a cost of 3.5 cents per piece and the molding two coats at a cost of 2.6 cents per piece. Advantages cited for the die castings are greater strength and lower cost; for the molded parts, dielectric qualities and lighter weight.

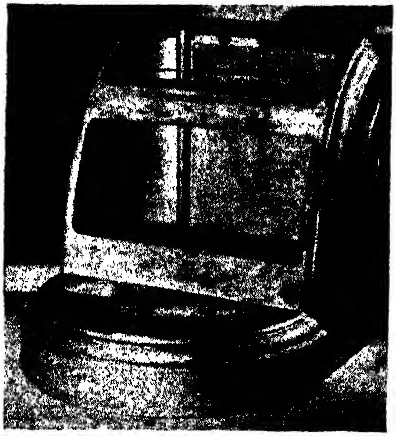

FIG. 4.—This die-cast display housing was employed in preference to a molding because more than one molding die would have been needed to secure as rapid production as in a single-cavity casting die, and this made total die cost for molding too high.

Figure 4 shows a display stand die cast in zinc alloy. Over-all size is about 9½ by 9½ by 11 in. The piece weighs 5¾ lb., approximate section thickness is 0.075 in. Total cost of die and fin-removing tools was $3,250. Cost in lots of 10,000 was 83¾ cents per piece. Approximate time required to finish single-cavity die was 5 weeks. Finish was black enamel; cost not given. When figured for production in phenolic plastic, the estimated cost of a single-cavity mold was $4,000 and cost per piece in lots of 10,000 was 95¼ cents. Reason for using die casting is that molding production would have been too slow, unless more than one mold had been provided, which would make mold cost prohibitive.

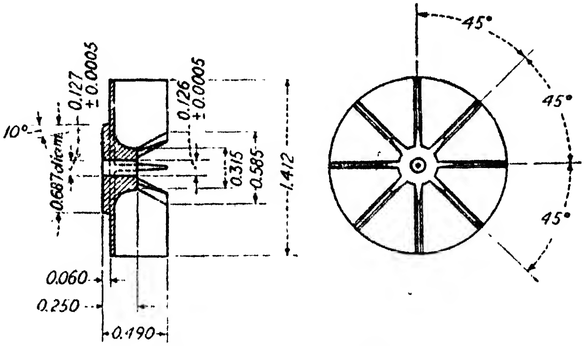

MOLDED PLASTIC

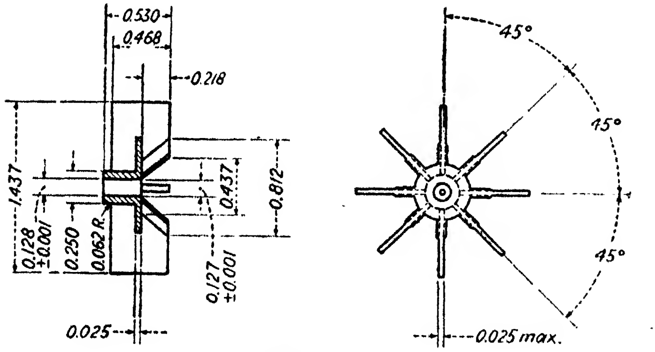

DIE CASTING

FIG. 5.—The molded impeller for a toy train whistle cost about one-fifth as much as the die casting and was much lighter and better balanced, making for more rapid acceleration and smoother running at high speed.

Impellers for toy train whistle, (Figs. 5 and 6) turn at 7,000 r.p.m.; hence any lack of balance (which appears to have resulted from slight porosity in the die casting) in the part causes vibration. Better balance is reported in the plastic-molded impeller and this, together with lower weight and lower inertia (permitting of more rapid acceleration and of short blasts from the whistle), is an important advantage. Impeller blades in the die-cast form are only 0.025 in. maximum in thickness, they are still thinner near the hub and have a web only $\frac{7}{16}$ in. in diameter adjacent to the hub. Some difficulty from bending of blades in handling

FIG 6—Molded impeller at left proved both better and cheaper than the one originally die cast as shown at right Molded propeller being thicker and having blades supported by a flange is stiffer than die casting

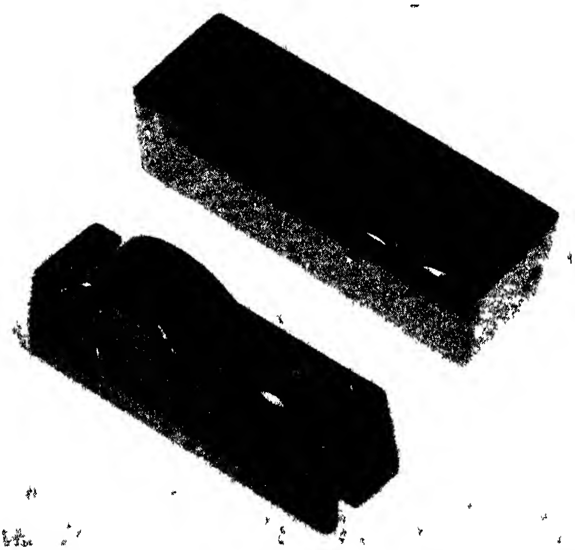

FIG. 7.—Molded housing, in foreground, is better in appearance, lighter, and cost less than die-cast part in background It also has desirable dielectric properties, making it better suited for electrical parts it encloses.

the die castings is reported. Advantages named in favor of the die-cast form are a higher production rate and greater ease in making a press fit on the shaft. The molded impeller has blades which taper from 0.050 in., where they join the web or shroud (which has the full 1.412 in. diameter of the blades and is 0.040 in. thick) to a thickness of 0.030 in. This greater thickness and complete support of the blades along one edge naturally yield a stiffer impeller, doubtless contributing to lessened vibration. Despite the greater thickness, the molded impeller weighs about half as much as the die-cast one (see Table II), and costs about one-fifth as much.

TABLE II.—COST AND PRODUCTION DATA

Data	Whistle impeller		Hollow casing	
	Zamak 6 zinc alloy	Bakelite phenolic plastic	Zamak 6 zinc alloy	Bakelite phenolic plastic
Total cost of dies or molds and cleaning tools	$450	$150	$550	$235
Number of cavities in die and mold	1	1	1	1
Hours required to make die and mold	250	85	325	130
Total number of pieces in cost estimates	125,000	125,000	30,000	30,000
Approximate number of pieces cast and molded per hour	500	47	250	27
Piece price (without applied finish), cents	1.100	0.211	4.773	1.355
Type of finish applied	None	None	Black synthetic	None
Cost of applied finish per piece, cents	None	None	0.577	None
Total cost per finished piece, cents (not including die or mold amortization)	1.10	0.211	5.350	1.355
Weight per piece, ounces	0.28	0.136	4.00	1.03

Hollow casings, both of which are used over electrical parts, are shown in Figs. 7 and 8. The molded form has the advantage of being a dielectric and of being better in appearance. Advan-

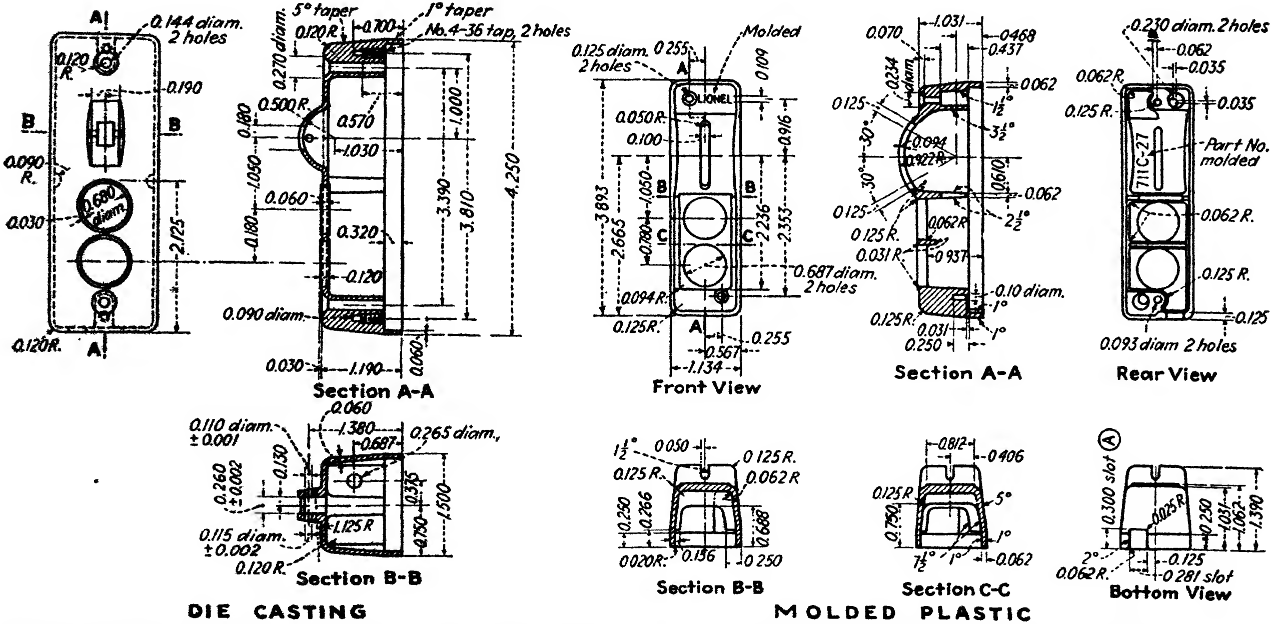

Fig. 8.—Details of die-cast and molded parts illustrated in Fig. 7. The molded part is smaller but performs a similar function. Relative cost data are given in Table II.

tages for the molded form are lower cost (see Table II), more enduring finish, and decreased shipping weight. Advantages for the die castings are greater strength and a higher production rate. These die castings require an applied finish, which, however, accounts only in part for their higher cost.

Impellers (Figs. 5 and 6) and hollow casings (Figs. 7 and 8) for toy- or model-railway use have been in quantity production in both die-cast and plastic-molded form. Table II gives costs and other data concerning these parts. The cost per piece is materially lower for each of the molded parts than for the corresponding die castings. For both parts the molds and dies have single cavities and mold cost runs from one-third to one-half that for the casting die. Molds required about the same proportionately shorter time to build. Other reasons for this difference in die and mold cost are: Molds are apparently somewhat smaller, have been produced quite recently by the latest methods, and involved hobbing of cavities on the two larger pieces, whereas the older dies had cut cavities in tool steel. As cavities are nearly the same size and shape, it would appear that, on a strictly comparable basis, the cost of sinking them would be substantially the same if the same methods were used in production. In the cost of the casting dies is included that of tools for trimming fins, whereas no corresponding tools for the moldings are required, since fins on moldings are removed by tumbling.

INDEX