METALLURGY OF COPPER

METALLURGY

OF

COPPER

BY

H. O. HOFMAN E. M., MET. E., PH. D.

Late Professor of Metallurgy in the Massachusetts Institute of Technology

Revised by

CARLE R. HAYWARD, S. B.

Associate Professor of Metallurgy in the Massachusetts Institute of Technology

SECOND EDITION
FIFTH IMPRESSION

McGRAW-HILL BOOK COMPANY, INC.
NEW YORK AND LONDON
1924

PRINTED IN THE UNITED STATES OF AMERICA

THE MAPLE PRESS COMPANY, YORK, PA.

PREFACE TO SECOND EDITION

In the ten years which have elapsed since the first edition of this work appeared the metallurgy of copper has undergone several important changes. In 1913 the reverberatory smelting furnace was just establishing itself as a serious competitor of the blast furnace, the basic converter was rapidly driving out acid practice, and, with the exception of a few plants for heap leaching and treatment of mine waters, there were no large installations for hydrometallurgy. The increased use of fine concentrates has forced more attention to dust prevention and recovery, and many changes of less importance have occurred. These developments have made a new edition imperative.

Twenty years of association with Dr. Hofman have given me his point of view, which I have tried to maintain in this revision. It has seemed wise to give brief descriptions of some obsolete processes in order that present practice may be more fully appreciated. For instance, several pages are given to acid-converter practice which may never be used again, but a study of converting would not be complete without this information.

With the present interest in leaching, some methods which are not now used commercially contain reactions which are important. For this reason several processes are referred to which are of no value today as such, but may contain suggestions which are valuable to those engaged in research.

It has been difficult to decide how much space to give to blast-furnace practice. There seems to be considerable difference in opinion regarding the position it will assume in the near future, but it has seemed wise to make only a slight cut in the original material and add modern illustrations and data.

It would be impossible to name and thank adequately all the companies and individuals who have freely furnished data and suggestions. Busy men have answered long questionnaires and have given assurances of further willingness to help. Copper companies, large and small, have been equally cordial in allowing the use of operating data.

This revision was undertaken by me at the request of Dr. Hofman who was physically unable to do the work himself or even to give advice and he died April 28, 1924, before the revision was completed.

In working over these pages I have been more than ever impressed with the painstaking care involved in the production of the original volume and I have greatly missed the kindly advice of my friend, former teacher, and colleague. His published works will be studied by metallurgists of coming generations and no history of metallurgy can ever be written without including his name.

CARLE R. HAYWARD.

MASSACHUSETTS INSTITUTE OF TECHNOLOGY,
Cambridge, Mass., March, 1924.

PREFACE TO FIRST EDITION

My aim in preparing this book has been to furnish a treatise on copper which will meet the demands of the metallurgist of today. In order to do this, it has been necessary: to present the leading physical and chemical facts about the metal, its alloys, and its compounds which are of metallurgical importance; to record from the older practice that which is of lasting value; and to give the details of the present modes of operating. Though we have several books treating of certain branches of the metallurgy of copper, such as the valuable volumes of Peters, Greenawalt, and others, there does not exist a modern book which covers the entire ground as the present work aims to do.

In the study of processes there are given the principles and the practice. The discussion of principles is confined to the essential points; for an extended presentation the reader is referred to my treatise on General Metallurgy. The examples of practice are drawn mainly from the United States. The text and footnotes will show that the technical literature on copper has been covered. The details of practice, not recorded in print, have been obtained through visits to and detailed studies of the leading copper smelteries and refineries of the United States; additional information has been available through correspondence. The tables giving the working data of the leading plants of the United States, Canada, Mexico, Germany, and Australia show the extent of the field which has been covered.

In all my visits and correspondence I have met with the greatest cordiality and liberality. I wish to express here my obligation to the heads and officers of the different smelteries and refineries for the assistance they have rendered me in my task; without this cordial and liberal aid it would not have been possible to prepare this treatise.

In working out the details, especially in the large number of calculations, I have been much assisted by the collaboration of my colleague Professor C. R. Hayward. The reading of the page-proof by Professor G. A. Roush detected errata which had escaped my own revision.

H. O. Hofman.

Massachusetts Institute of Technology,
Boston, Mass., June, 1914.

CONTENTS

METALLURGY OF COPPER

CHAPTER I

INTRODUCTION

1. **Historical Notice.**[1]—Copper is a widely distributed metal and, next to iron, it is the most important.[2] In prehistoric times it was used for domestic utensils and for implements of war.[3] In the archæological chronology of the stone, bronze, and iron ages, it has been supposed that the use of copper always preceded that of iron; at present it is held that generally iron was converted to use at an earlier period than copper, although in regions in which native copper occurred at the surface it was worked before iron, which had first to be reduced to the metallic state. Thus, the races inhabiting this continent[4] before the Indian were acquainted with copper, as is shown by the utensils found in western mounds. In opening the Lake Superior copper mines, excavations to the depth of 60 ft. were encountered, containing stone hammers and charcoal, indicating that fire setting had been the method of winning native copper. At Ducktown, Tenn.,[5] are remains of prehistoric smelting operations.

Copper was mined first in Connecticut (1709), later in New Jersey and Pennsylvania, but no work of any importance was carried on until the middle of the last century. In 1845 the whole output of copper was 100 tons, and this came from Vermont, Pennsylvania, Virginia, North Carolina, and Georgia. California became a producer in 1860. In 1841 the existence of native copper at Lake Superior became generally known, but copper mining as an industry was not established until 1850. Lake Superior was the leading copper producer up to 1887, when it was outranked by Montana, where copper mining began early in the seventies,[6] and smelting about 1880.[7] The third great copper

[1] BECK, L., "Die Geschichte des Eisens," Vieweg, Brunswick, 1891, I, Introduction, p. 17; AGRICOLA-HOOVER, "De Re Metallica," London, 1913, p. 402; *Eng. Mining J.*, 1913, XCVI, 359.

[2] DOUGLAS, *Eng. Mining J.*, 1912, XCIII, 776.

[3] GARLAND, "Metallograph. Res. Egyptian Metal Antiquities," *J. Inst. Metals*, 1913, X, 329.

[4] FOSTER, J. W. and WHITNEY, J. D., "Report on the Geology and Stratigraphy of Lake Superior," Interior Department Land Office, Washington, 1850 and 1851; WHITNEY, J. D., "Metallic Wealth of the United States," Lippincott, Philadelphia, 1854; "Mineral Statistics of Michigan," 1880; KIRCHHOFF, "Mineral Resources of the United States," 1882, p. 213, *Trans. A. I. M. E.*, 1876–77, V, 165 (HEWITT); 1890–91, XIX, 679 (DOUGLAS); 1906, XXXVII, 288 (WOOD, chemical analyses); *Mineral Ind.*, 1894, III, 243 (DOUGLAS, chemical analyses); 1895, IV, 269 (DOUGLAS).

[5] HENRICH, *Trans. A. I. M. E.*, 1895, XXV, 175.

[6] WEED, H. V., *Professional Paper* No. 74, U. S. Geol. Survey, 1912.

[7] HOFMAN, *Trans. A. I. M. E.*, 1904, XXXIV, 258.

district is in the Southwest, including New Mexico, Arizona,[1] and Lower California. The existence of copper in this region was known to the Mexicans,[2] but active operations began after 1880 with the building of the Southern and the Atlantic & Pacific Railroads. In recent years Utah, Nevada, California, and some of the southern states have entered the list of important producers of the country.

2. Statistics.—The world's production[3] of copper in 1913, 1918, and 1922 is given in Table I, that of the United States[4] in Table II.

TABLE I.—WORLD'S PRODUCTION OF COPPER
(In metric tons)

	1913	1918	1922[e]
Africa	25,411	31,110	54,084
Argentina	117		
Australasia	47,326	33,838	12,478
Austria-Hungary	4,135	.....	4,200
Bolivia	3,658	*4,000	10,700
Canada	34,587	52,693	22,952
Chile	40,195	85,850	128,308
Cuba	3,517	12,337	10,694
Germany	25,309	15,101	17,000
Italy	1,626	[c] 1,114	
Japan	[a] 73,152	95,800	54,763
Mexico	52,815	75,529	27,073
Norway	11,796	2,856	*2,000
Peru	[d] 25,715	44,800	35,562
Russia	42,970	*5,000	*2,000
Spain-Portugal	99,587	*41,000	36,500
Sweden	6,891	2,956	
Turkey	508		
United Kingdom	305	[e] 203	
United States	557,387	865,692	[b] 431,040
Serbia	.....	6,000	5,222
Other countries	.....	*5,000	*7,000
	1,002,284	1,380,879	861,576

* Estimated.
[a] As reported by Henry R. Merton & Co., Ltd., of London.
[b] U. S. Geol. Survey.
[c] As officially reported.
[d] As reported by the *Eng. Mining J.*
[e] American Bureau of Metal Statistics, except as noted.

[1] MARTIN, *Eng. Mining J.*, 1913, XCV, 882.
[2] WENDT, *Trans. A. I. M. E.*, 1886–87, XV, 25.
[3] *Mineral Ind.*, 1916, XXV, 156; 1922, XXXI, 167.
[4] *Op. cit.*, 152, 161.

TABLE II.—SMELTERS' PRODUCTION OF COPPER IN THE UNITED STATES
(In pounds)

	1913	1918	1922
Alaska	24,452,000	64,326,616	59,900,579
Arizona	399,849,745	787,338,533	428,200,634
California	32,390,272	43,623,933	20,440,430
Colorado	7,670,090	5,930,200	3,635,916
Idaho	8,434,028	5,051,531	3,504,944
Michigan	159,437,262	236,243,679	122,545,126
Montana	285,336,153	323,377,564	165,341,414
Nevada	84,683,961	115,842,177	20,398,611
New Mexico	46,953,414	92,813,482	29,127,329
Utah	147,591,955	235,978,152	79,665,563
Washington	.....	2,290,600	369,133
Wyoming	448,805	[a]	Nil
East and South	.....	17,704,875	15,126,989
Southern states	24,333,014		
Other states	4,155,135	7,791,545	2,029,279
Total	1,225,735,834	1,937,900,887	950,285,947

[a] Included in "Other states."

TABLE III.—COMPARISON OF PRODUCTION AND CONSUMPTION OF THE PRINCIPAL COPPER-CONSUMING COUNTRIES, IN 1913
(In millions of pounds)

	Production	Consumption
United States	1,224	707
Japan	147	54
Mexico	116	
Australia	101	133
Chile	93	
Canada	77	15
Russia	74	89
Spain	69	
Peru	61	
Germany	56	573
England	5	310
France	.....	230
Austria-Hungary	1	86
Italy	6	68
Norway	31	
Belgium	.....	33
Totals	2,061	2,298

Table I shows that the United States produced in 1913 over 55 per cent of the world's copper, in 1918, under war conditions, nearly 63 per cent, and in 1922 about 50 per cent. Table II shows that Arizona has become the leading copper state with over 40 per cent of the United States production. Following in order are Montana with 16 per cent, Utah with 12 per cent, and Michigan with 12 per cent according to 1918 figures, which probably reflect capacities better than the 1922 figures.

Table III[1] gives a comparison of production and consumption of the principal copper-consuming countries under pre-war conditions in 1913. No reliable figures are available for present conditions.

It will be noted that, according to the above table, consumption exceeded production.

3. **Bibliography.**—The number of books dealing with copper alone is comparatively small, and none of them covers the entire ground. Usually the subject is discussed in treatises on non-ferrous metallurgy. Thus, the works of Percy (1867), Kerl (1881), Balling (1885), Schnabel-Louis (1905), Hildebrandt (1906), and Prost (1912) contain valuable discussions of the subject. There is subjoined a list of books dealing exclusively or mainly with copper.

GRÜNER, L., "Métallurgie du Cuivre," Paris, 1884.
HOWE, H. M., "Copper Smelting," *Bull.* 26, U. S. Geol. Survey, 1885 (now out of print).
PETERS, E. D., "Modern Copper Smelting," New York, 1895.
LANG, H., "Matte Smelting," New York, 1896.
PETERS, E. D., "Principles of Copper Smelting," New York, 1907.
TROCHU, P., "Les Pyrites," Paris, 1907.
HIXON, H. W., "Notes on Lead and Copper Smelting and Converting," New York, 1908.
VENANCOURT, G. C. DE, "Le Water-jacket à Cuivre," Paris, 1910.
PETERS, E. D., "Practice of Copper Smelting," New York, 1911.
GREENAWALT, W. E., "The Hydrometallurgy of Copper," New York, 1912.
ULKE, T., "Modern Electrolytic Copper Refining," New York, 1903.
READ, T. T., "Recent Copper Smelting," San Francisco, 1914.
LEVY, D. M., "Modern Copper Smelting," London, 1912.
ADDICKS, L., "Copper Refining," New York, 1921.

The subject of copper alloys is not taken up in these works. There exist many valuable monographs and papers on the various phases of the metallurgy of copper; these are referred to in the text.

[1] *Mineral Ind.*, 1922, XXXI, 167.

CHAPTER II

PROPERTIES OF COPPER[1]

4. Physical Properties.—The metal occurs in the native state. The specific gravity of pure copper at 20° C. is 8.89;[2] good commercial metal shows lower values owing to porosity,[3] the presence of Cu_2O,[4] and impurities. The specific gravity of molten metal is given as 8.22.

The luster of the compact metal is metallic, while precipitated metal is dull. The color of compact metal is a yellowish-red; it ranges from orange-red to rose-color, the shades being governed by the temperature of the cooling water in which the casting has been quenched. Metal precipitated from solution is a brownish-red; a colloidal solution has a violet to brownish color.[5] Copper is transparent in thin films transmitting greenish to bluish light.

FIG. 1.—Surface of cast copper, 30 diameters.

FIG. 2.—Surface of electrodeposited copper, 30 diameters.

FIG. 3.—Surface of rolled copper, 30 diameters.

Copper crystallizes mainly in isometric forms, and twin crystals are common. Under the microscope[6] the surface[7] of cast copper (Fig. 1) is seen to be made up of large primary grains, composed of small secondary grains with definite orientation; that of electrodeposited copper (Fig. 2), of primary grains only, which have no regular orientation to one another. With rolled copper (Fig. 3), the secondary grains are elongated in the direction in which rolling took place, and this gives the metal the characteristic fibrous structure.[8] The so-called allotropic

[1] HAMPE, *Z. Berg. Hütten. u. Sal. Wesen i. Pr.*, 1873, XXI, 218; 1874, XXII, 93; 1876, XXIV, 6.

[2] *Circular* 31, Bureau of Standards, 1912, p. 61.

[3] STAHL, *Berg. Hüttenm. Z.*, 1901, LX, 77.

[4] TRIPPEL, *Eng. Mining J.*, 1888, XLV, 436.

[5] RASSENFOSSE, *J. Soc. Chem. Ind.*, 1911, XXX, 1335.

[6] BAUCKE, *Proc. Internat. Assoc. Testing Materials*, 1912, II, 14; BASSETT, *Met. Chem. Eng.*, 1913, XI, 64.

[7] CAMPBELL, *Report Alloys Research Comm.*, 1904, p. 867; *J. Frankl. Inst.*, 1902, CLIV, 14; *Metallurgie*, 1907, IV, 828; ADDICKS, *Electrochem. Ind.*, 1903, I, 582; HUNTINGTON, *Eng. Mining J.*, 1905, LXXX, 1109; *Metallurgie*, 1906, III, 40; ABBOTT, *Eng. Mining J.*, 1909, LXXXVII, 1040; FAUST, *Z. anorg. Chem.*, 1912, LXXVIII, 201; *J. Inst. Met.*, 1913, IX, 223; WÄSER and KÜHML, *Electrochem. Z.*, 1912, XVIII, 151, 211.

[8] ROBIN, "Annealing of Copper," *Rev. métal.*, 1913, X, 750.

copper of Schützenberger[1] has been found by Benedicks[2] to consist of ordinary copper containing varying amounts of Cu_2O. The dilatation experiments of Turner and Levy[3] on hard-drawn and annealed wire give simple curves without any jog whatever.

The fracture of cast copper is hackly to granular; that of rolled or drawn copper, fibrous.

Copper is soft when pure; with Fe at 4.5 and Ag at 2.7, the scratch hardness[4] of Cu is 3.7.

The tensile strength of the cast or hard-drawn metal is 60,000 to 70,000 lb. per square inch; annealing reduces it to 30,000 to 40,000 lb.[5] Shock tests by

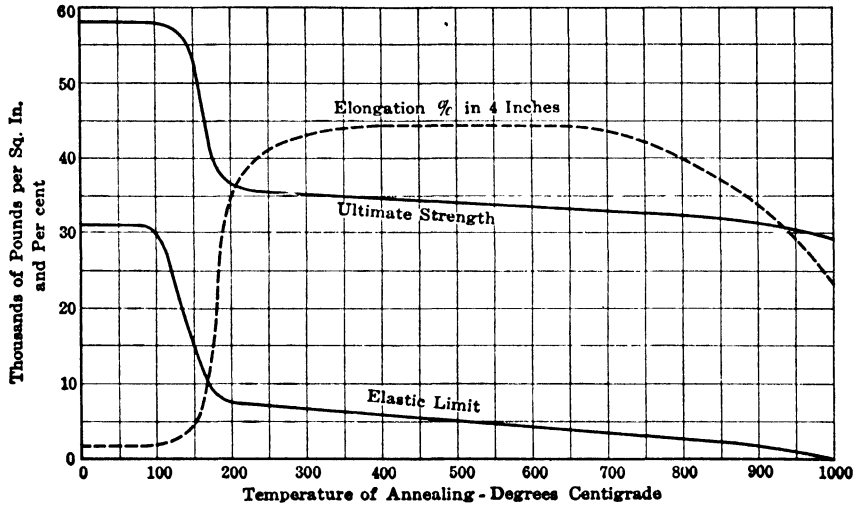

FIG. 4.—Mechanical properties of electrolytic copper as affected by temperature.

Baucke[6] show that cast copper has a very low resilience, and that the property is improved by forging. A rise in temperature weakens the metal.[7] Figure 4, by Grard, shows the mechanical changes electrolytic copper undergoes with a rise in temperature. With commercial copper brittleness begins[8] at 700° C. in steam, due to a reduction of oxide around the grains.

[1] *Compt. rend.*, 1887, LXXXVI, 1240, 1397.

[2] *Metallurgie*, 1907, IV, 5, 33.

[3] *Proc. Roy. Soc., Ser. A.*, 1907, LXXX, 1; *Rev. métal. Extr.*, 1908, LV, 655.

[4] MARTENS, *Mitt. kgl. techn. Versuchsanst*, 1894, XVI, 172; *Iron Age*, 1894, LIV, 900.

[5] BENNET, "Tensile Strength of Electrolytic Copper," *Trans. Am. Electrochem. Soc.*, 1912, XXI, 243; *Met. Chem. Eng.*, 1912, X, 298.

[6] *Intern. Z. Metallog.*, 1912, III, 195; *J. Inst. Metals*, 1913, IX, 210.

[7] GRARD, *Rev. métal.*, 1909, VI, 1069; LEIDIG, *Verhandel Verein. Beförd. Gewerbefl.*, 1911, XC, 459, 525; JOHNSON, *Met. Chem. Eng.*, 1911, IX, 399; HUNTINGTON, *J. Inst. Metals*, 1912, VIII, 127; MÜLLER, *Metall. u. Erz*, 1913, X, 220.

[8] RUDER, *Met. Chem. Eng.*, 1915, XIV, 477.

The pure metal is easily rolled into sheets,[1] hammered into foil,[2] and drawn into fine wire.[3] The hardness caused by mechanical treatment is removed by annealing[4] at a temperature ranging from 500 to 700° C. in an atmosphere free from S.[5]

Welding[6] by ordinary means is possible to a small extent; pieces are easily joined by electric welding.

Molten copper absorbs[7] SO_2, H, and CO (disputed by Sieverts), but no C_xH_y; upon solidification most of the absorbed gases are given off, at least at atmospheric pressure.[8] The absorbing power rises with the temperature, and is interfered with by Cu_2O, P, As, and Sb. At a red heat copper readily absorbs H.[9]

The melting point of copper is 1,083° C.; the latent heat of fusion 43.3 cal.; the boiling point 2,310° C.[10] *In vacuo* volatilization[11] is noticeable at 700° and decided near the melting point.[12] When volatilized by heating with the oxyhydrogen blowpipe or the electric arc, it burns with a green flame; the fumes are poisonous.[13] The specific heat at 170° C. is 0.09244; at 100°, 0.09422; at 300°, 0.09846. The coefficient of linear expansion is 0.000017. The thermal conductivity is 736 when Ag = 1,000, or 0.72 g. cal. per degree Centigrade for a cube whose side is 1 cm.

The electric conductivity[14] of 1 cm. cube at 0° C. = 620,000 reciprocal ohms; or the resistance of a wire 1 ft. long and 0.001 in. in diameter at 0° C. = 9.529 ohms for annealed and 9.71 for hard-drawn wire. The conductivity of cast

[1] POWE, *Brass World*, 1905, I, 183; COPPERMAN, *Metal Ind.*, 1909, VII, 4, 64, 99, 134.

[2] FULLER, J., "Art of Copper Smithing," Spon, London, 1912.

[3] KÜPPER, *Z. Ver. deut. Ing.*, 1906, L, 1899, 2022; *Rev. métal. Extr.*, 1907, IV, 722; PYE, *J. Inst. Metals*, 1911, VI, 165; *Circular* No. 31, "Copper Wire Tables," Bureau of Standards, 1912.

[4] HOWE, *Trans. A. I. M. E.*, 1884–85, XIII, 646; CUMMINS, *Eng. Mining J.*, 1890, L, 216; THOMAS, *Iron*, 1892, XL, 399; HEYN, *J. Iron and Steel Inst.*, 1902, II, 745; STAHL, *Metallurgie*, 1908, V, 289.

[5] JOHNSON, *Met. Chem. Eng.*, 1911, IX, 87.

[6] WAITE, "Leibe Process," *Eng. Mining J.*, 1890, LXIX, 705; MCROBERTS, "Birmington Process," *Iron Age*, 1891, XLVIII, 1156.

[7] CARON, *Compt. rend.*, 1866, LXIII, 1129; HAMPE, *Z. Berg. Hütten. u. Sal. Wesen i. Pr.*, 1873, XXI, 274; *Chem. Z.*, 1886, XVII, 1692; STAHL, *Berg. Huttenm. Z.*, 1886, XLV, 414; 1889, XLIX, 299; 1893, LII, 19; 1901, LX, 77; *Metallurgie*, 1907, IV, 761; SIEVERTS, *Ber. deut. chem. Ges.*, 1910, XLIII, 893; 1912, XLV, 221; *Z. Elektrochem.*, 1910, XVI, 707; *Z. physik. Chem.*, 1911, LXXVII, 591. GUICHARD, *Compt. rend.*, 1911, CLIII, 104; *J. Inst. Metals*, 1911, VI, 329.

[8] SO_2: SCHENCK and HEMPELMANN, *Metall u. Erz*, 1913, X, 28; STUBBS, *J. Soc. Chem. Ind.*, 1913, XXXII, 311.

[9] HEYN, *Z. Ver. deut. Ing.*, 1900, XLIV, 508; *Metallographist*, 1903, VI, 48; *Metallurgie*, 1906, III, 82; SIEVERTS, *Z. physik. Chem.*, 1911, LXXVII, 591; *J. Inst. Metals*, 1911, VI, 342; HEATH, "Estimation of Oxygen and Occluded Gases in Copper," *J. Ind. Eng. Chem.*, 1912, IV, 402.

[10] GREENWOOD, *Eng. Mining J.*, 1911, XCII, 3.

[11] HUGHES, *J. Inst. Metals*, 1912, VII, 700.

[12] KAHLBAUM, *Berg. Hüttenm. Z.*, 1898, LVII, 201; 1902, LXI, 295.

[13] HANSEN, *Met. Chem. Eng.*, 1911, IX, 67.

[14] WOLFF, F. A., and DELLINGER, J. H., "The Electric Conductivity of Commercial Copper," Bureau of Standards, VII, No. 1 (reprint No. 148), 1911; NORTHRUP, "Resistivity between 20 and 1,450° C.," *J. Franklin Inst.*, 1914, CLXXVII, 1.

copper is about 3.5 per cent lower than that of annealed wire. In smelting works the conductivity is usually given in terms of the Mathiessen Standard. This standard is equal to copper which at 15° C. has a conductivity of 1,687 reciprocal ohms per cubic centimeter, or 1 meter-gram of pure soft copper at 0° C. = 0.14172 international ohm. The standard is represented by the figure 100; cathode copper not melted has shown 103.14; mass copper from Lake Superior 102.5; electrolytic wire bar often reaches 101; Lake copper usually is 99.[1] Tests are usually made on annealed wire, No. 12 B. & S. gage (= 0.08081 in. in diameter). The conductivity as affected by mechanical treatment is shown in the diagram of Addicks[2] (Fig. 5). If the conductivity is to be given for hard-drawn wire, it is customary to deduct 2.5 per cent from the figure obtained with annealed wire. Small amounts of impurity have a decided influence upon the conductivity of copper. Figure 6 gives some of the experimental results of Addicks.[3] Arsenic and antimony are the two impurities likely to be found in refined copper which strongly depress the electric conductivity; thus 0.0013 per cent As[4] or 0.0071 per cent Sb lowers it 1 per cent, while the elements which render copper brittle appear to have little effect upon the electric properties.[5] Figure 7 shows the combined effects of As and Sb in Montana electrolytic copper within a range of 0.0034 and 0.0044 per cent. The curve for O in Fig. 4 is abnormal, because Cu_2O reduces the conductivity progressively.[6] It finds its probable explanation in the circumstance that O,

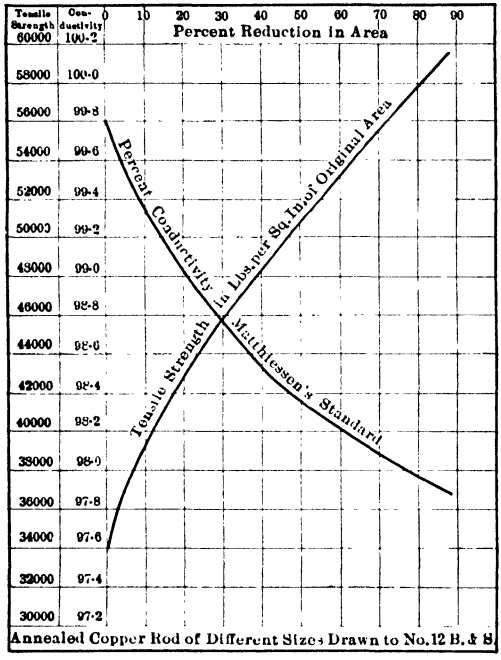

FIG. 5.—Electric conductivity of copper as affected by mechanical treatment.

[1] Table II, WOLFF and DELLINGER, *op. cit.*

[2] *Electrochem. Ind.*, 1903, I, 581.

[3] *J. Franklin Inst.*, 1905, CLX, 425; *Trans. A. I. M. E.*, 1906, XXXVI, 18. Other data: KELLER, *Mineral Ind.*, 1898, VII, 243 (complete analyses with tensile strengths and electric conductivities).

[4] HIORNS and LAMB, *J. Soc. Chem. Ind.*, 1909, XXVIII, 451 (curve 1 to 3 per cent As); FRIEDRICH, *Metallurgie*, 1908, V, 533 (curve 1 to 12 per cent As), PUSCHIN and DISCHLER, *Am. Chem. Soc. Chem. Abstracts*, 1912, VI, 1587; *Z. anorg. Chem.*, 1913, LXXX, 65 (curve 1 to 45 per cent As).

[5] BARDWELL, *Trans. A. I. M. E.*, 1913, XLVI, 749.

[6] WALKER, *Mineral Ind.*, 1898, VII, 248; HOFMAN, HAYDEN and HALLOWELL, *Trans. A. I. M. E.*, 1907, XXXVIII, 178, 183.

introduced as Cu_2O or CuO into the Cu, oxidizes the slight amount of impurity present in high-grade metal and thus increases the conductivity of the latter.

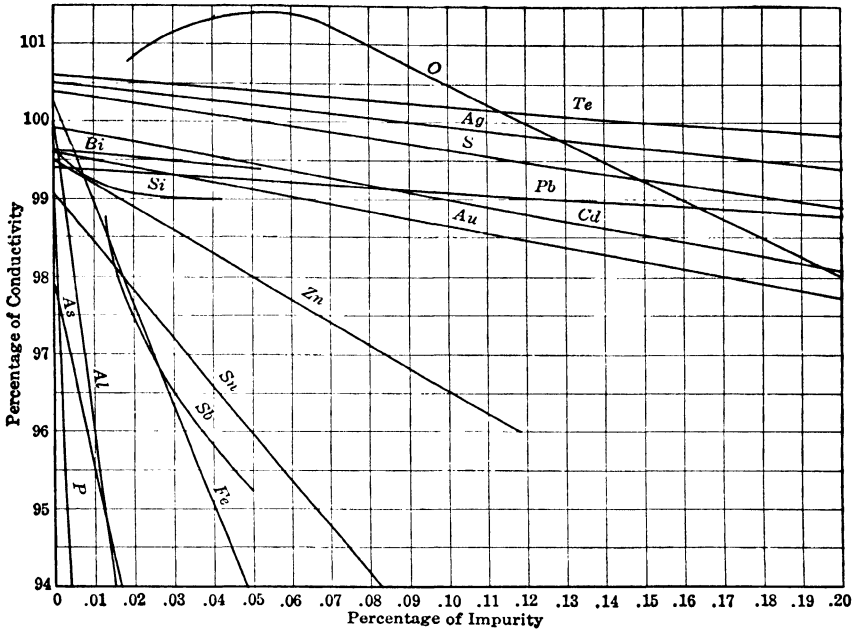

FIG. 6.—Electric conductivity of copper as affected by impurities.

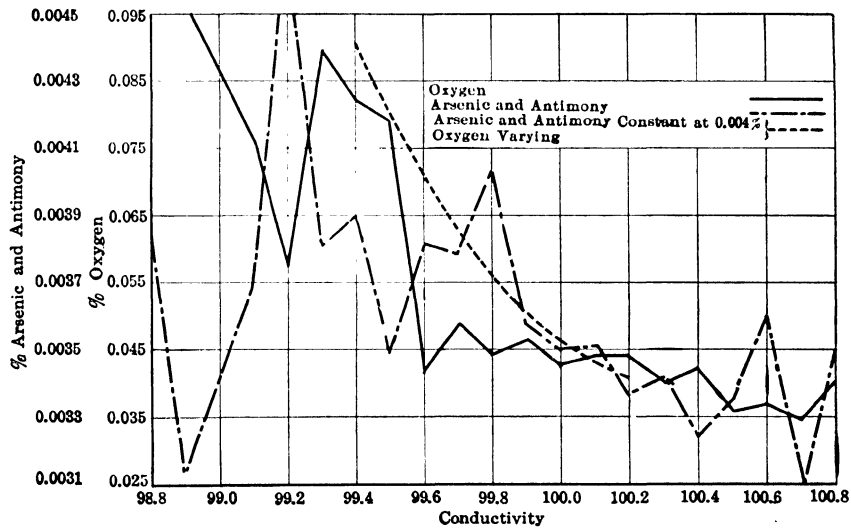

FIG. 7.—Electric conductivity of copper as affected by oxygen, arsenic and antimony, severally and combined.

The behavior of a small amount of impurity depends greatly upon the form in which it is present; if in the metallic state, it is liable to form a solid solution

with the Cu, and have a greater depressing effect than if present in some other form. Such irregularities are well brought out in Fig. 7.

Some additional figures[1] showing the effect of small quantities of impurities added independently to electrolytic copper are given in Table IV.

With the exception of lead the effect of the impurities is additive. Lead corrects arsenic by forming lead arsenide which is insoluble in copper.

Copper is diamagnetic.

5. Chemical Properties.—At ordinary temperature copper is not attacked by dry air nor by moist air free from CO_2; in the presence of this gas it becomes coated with a green basic carbonate.[2] The chemical theory of corrosion has been in part replaced by the electrolytic theory.[3] When heated above 185° C. copper begins to oxidize, becomes rose-colored at about 200°, brass-colored at 300°, bluish-green at 350°, and dark above that temperature. At a red heat it becomes coated with a dark scale consisting on the outside of CuO and on the

TABLE IV.—EFFECT OF IMPURITIES CONTAINED IN COPPER ON THE CONDUCTIVITY

Per cent impurity	As	Sb	Se	Te	Ni	Ag	Mg	Al	Fe	Co	Sn	P	Si	Zn
0.0010	100.6	100.5	100.6	100.6	100.5	100.6	101.0							
0.0020	100.3	100.3	100.5	100.5	100.4	100.9	99.9	.....	.....	.....	.....	101.2		
0.0050	99.3	99.8	99.8	100.3	100.0	100.1	99.9	.....	.....	.....	.....	100.6	101.3	
0.0100	97.6	98.9	99.0	99.9	99.3	100.0	99.9	100.7	.....	100.0	101.0	98.6	98.7	100.6
0.0200	94.5	97.2	98.9	99.7	98.3	100.0	99.7	99.6	101.0	99.4	100.8	92.5	96.7	
0.0300	91.5	95.8	98.8	99.6	97.6	100.0	99.3	98.6	98.5	99.1	100.8	84.4	90.8	
0.0500	87.7	93.5	98.6	99.4	96.0	99.9	97.8	96.6	91.7	98.7	100.8	72.3	80.2	
0.1000	76.2	89.3	98.0	99.2	93.2	99.8	94.3	88.1	76.4	88.0	100.3	54.6	65.5	100.6
0.2000	62.0	.....	97.5	99.0	87.1	99.4	88.0	79.4	53.6	70.9	88.6	.....	48.7	99.9

PERCENTAGE LOWERING OF CONDUCTIVITY
(100.6 taken as standard)

0.0010	.....	0.1	.....	.....	0.1									
0.0020	0.3	0.3	0.1	0.1	0.2	.....	0.7							
0.0050	1.3	0.8	0.8	0.3	0.6	0.5	0.7	.....	.....	.....	.....	0.0	0.3	
0.0100	3.0	1.7	1.6	0.7	1.3	0.6	0.7	.....	.....	0.6	.....	2.0	1.9	
0.0200	6.1	3.4	1.7	0.9	2.3	0.6	0.9	1.0	0.6	1.2	.....	8.1	3.9	
0.0300	9.1	4.8	1.8	1.0	3.0	0.6	1.3	2.0	2.1	1.5	.....	16.2	9.8	
0.0500	12.9	7.1	2.0	1.2	4.6	0.7	2.8	4.0	8.9	1.9	.....	28.3	20.4	
0.1000	24.4	11.3	2.6	1.4	7.4	0.8	6.3	12.5	24.0	12.6	0.3	46.0	35.1	
0.2000	38.6	.....	3.1	1.6	13.5	1.2	12.6	21.2	47.0	29.7	12.0	.....	51.6	0.7

[1] Private communication, S. Skowronski.

[2] DIEGEL, *Z. Ver. Bef. Gewerbefl.*, 1899, LXXVIII, 313; 1903, LXXX, 93, 119, 157; HEYN, *Mitt. kgl. Materialprüfungsamt.*, 1911, XXIX, 29; EASTICK, *Metal Ind.*, 1913, XI, 524.

[3] BENGOUGH, *J. Inst. Metals*, 1911, V, 28; PHILIP, *op. cit.*, 1912, VII, 50; 1913, IX, 61.

inside of Cu_2O; the scale is separated from the metal by bending and quenching. According to Heyn,[1] copper heated for a short time above 500° C. withstands a smaller number of bends than when heated below this temperature because of the Cu_2O that has been formed. It is clear that overheating[2] a cake of copper which causes a superficial oxidation will affect the sheet that is rolled from it.

Copper is readily soluble in HNO_3, when not too concentrated; in *aqua regia;* boiling H_2SO_4 of 66° Bé.; slowly soluble in hot dilute H_2SO_4 in the presence of air; in dilute HCl with air; in NH_4OH with air; in KCN with or without air H_2SO_3 slowly changes Cu into CuS.

[1] *Mitt. kgl. techn. Versuchsanst.*, 1900, XVIII, 327; *Z. Ver. deut. Ing.*, 1902, XXXVI, 1119; *Stahl. u. Eisen*, 1902, XXII, 1234.

[2] STAHL, *Metallurgie*, 1908, V, 289; 1912, IX, 418.

CHAPTER III

COPPER OF COMMERCE, ITS IMPURITIES AND THEIR EFFECTS

6. Grades of Copper.[1]—In the United States three grades of copper are marketed: electrolytic, Lake, and casting copper, which are cast in the forms of wire bar, ingot and ingot bar, and cake. Electrolytic and Lake copper contain over 99.8 per cent Cu; casting copper as little as 98.5 per cent Cu. According to tests made by W. H. Bassett[2] in 1903 to 1904, an average of 511 samples of best electrolytic copper gave on hard-drawn wire 0.003 in. in diameter, tensile strength 65,259 lb. per square inch, and elongation 1.55 per cent in 8 in.; on annealed wire, 0.06 in. in diameter, in 6 in. 24.8 twists and 13.6 bends; electric conductivity 100.32 per cent Math. Stand. An average of 55 samples of best Lake copper gave tensile strength 66,141 lb., elongation 1.45 per cent, twists 22.2, bends 12.2, conductivity 99.85 per cent. Thus, as regards physical properties electrolytic copper is preferable to Lake copper. If, nevertheless, Lake copper[3] has been sold at ¼ cent per pound more than electrolytic, the reason is to be found in the uniform character of Lake copper and the irregularities in the properties of electrolytic copper. Bassett's tests show that the progress made in the electrolytic process and in the fire refining of cathodes has so improved the character of electrolytic that it stands higher today than Lake copper.

Casting copper is a general term for fire-refined blister copper too low in precious metals to make their recovery profitable, and carrying impurities in too small a quantity to make them objectionable. Its electric conductivity is too low to make it available for electric use, and the amount of impurity too high for making brass that is to be rolled or drawn; it serves, therefore, for making brass and copper castings. Table V gives the forms in which copper was cast in the United States in 1920.[4]

TABLE V.—FORMS IN WHICH COPPER WAS CAST IN THE UNITED STATES IN 1920

	Pounds	Per cent
Wire bars	841,000,000	52.53
Ingots	439,000,000	27.42
Cakes	205,000,000	12.80
Cathodes	39,000,000	2.44
Other forms	77,000,000	4.81
Total	1,601,000,000	100.00

[1] INGALLS, *Eng. Mining J.*, 1912, XCIII, 887, 939 (also selling of copper); TASSIN, *Metal Ind.*, 1912, X, 275, 335, 447.

[2] *Records*, Circuit Court of the U. S., *Bigelow vs. Calumet & Hecla Mining Co.*, Oct. 17, 1907.

[3] *Eng. Mining J.*, 1908, LXXXVI, 842.

[4] *Min. Res. U. S.*, 1920, I, 502.

Uses of Copper.—Metallic copper is used in the arts for electrical purposes, and for the manufacture of brass, bronze, and other alloys; it is rolled into sheets and tubings, and formed into castings. Table VI gives the distribution of copper in the metal arts in 1913.[1] The estimated figures for 1919 and 1920[2] are given in Table VII.

TABLE VI.—ESTIMATED USES OF COPPER IN THE UNITED STATES IN 1913

	Pounds	Per cent
Electrical industry (including wire)	400,000,000	52.1
Brass mills	220,000,000	28.7
Copper sheets	105,000,000	13.7
Miscellaneous (chiefly casting and alloys)	42,000,000	5.5
	767,000,000	100.0

Specifications.—The standard specifications for copper-wire bars, cakes, slabs, billets, ingots, and ingot bars adopted by the American Society of Testing Materials, Aug. 21, 1911,[3] are given in the following:

1. (*a*) *Metal Contents.*—The copper in all shapes shall have a purity of at least 99.88 per cent as determined by electrolytic assay, silver being counted as copper.

(*b*) *Conductivity.*—All wire bars shall have a conductivity of at least 98.5 per cent (annealed); all ingots and ingot bars shall have a conductivity of at least 97.5 per cent (annealed), excepting only arsenical copper, which shall have a conductivity of not less than 90 per cent (annealed).

Cakes, slabs, and billets shall come under the ingot classification, except when specified for electrical use at time of purchase, in which case wire-bar classification shall apply.

The "Annealed copper standard," or resistance of a meter-gram of standard annealed copper at 20° C., shall be considered as 0.15302 international ohm. The per cent conductivity for purposes of this specification shall be calculated by dividing the resistivity of the annealed copper standard by the resistivity of the sample at 20° C.

2. Wire bars, cakes, slabs, and billets shall be substantially free from shrink holes, cold sets, pits, sloppy edges, concave tops, and similar defects in set or casting. This clause shall not apply to ingots or ingot bars, in which case physical defects are of no consequence.

3. Five per cent variation in weight or ¼-in. variation in any dimension from the refiner's published list or purchaser's specified size shall be considered good delivery; provided, however, that wire bars may vary in length 1 per cent from the listed or specified length, and cakes 3 per cent from the listed or specified size in any dimension greater than 8 in. The weight of ingot and ingot-bar copper shall not exceed that specified by more than 10 per cent, but otherwise its variation is not important.

[1] *Min. Res. U. S.*, 1913, I, 580.
[2] *Mineral Ind.*, 1921, XXX, 148.
[3] Yearbook, 1911, p. 127.

The specifications of the leading copper producers of the world are contained in the report made by Guillet[1] at the Copenhagen Congress. The congress

TABLE VII.—ESTIMATED CONSUMPTION OF COPPER IN THE UNITED STATES BY INDUSTRIES

	1919		1920	
	Pounds	Per cent	Pounds	Per cent
Electrical manufactures	284,000,000	23.48	340,000,000	26.12
Telephones and telegraph	65,679,218	5.43	100,000,000	7.68
Wire (not included elsewhere)	160,000,000	13.23	190,000,000	14.59
Automobiles	92,965,000	7.68	99,320,400	7.63
Locomotives	8,998,000	0.74	9,457,250	0.73
Railway cars—freight	15,676,400	1.30	7,543,500	0.58
Railway cars—passenger	156,400	0.01	576,000	0.04
Steam railways—electrified	250,000	0.02	2,200,000	0.17
Shipbuilding	101,884,625	8.42	61,906,325	4.76
Buildings	76,778,800	6.35	53,443,200	4.10
Ammunition	23,000,000	1.90	23,400,000	1.80
Fire extinguishers	2,000,000	0.16	2,100,000	0.16
Pins	2,000,000	0.16	2,000,000	0.15
Valves	10,000,000	0.83	10,000,000	0.77
Coins	2,075,321	0.17	3,148,863	0.24
Bearing metal—steam railways	45,000,000	3.72	45,000,000	3.46
Cash registers	1,300,000	0.11	1,340,000	0.10
Condensers	10,000,000	0.83	6,000,000	0.46
Miscellaneous	150,000,000	12.40	180,000,000	13.83
Total	1,051,763,764	86.94	1,137,435,538	87.37
Exported in manufactures	157,965,641	13.06	164,420,412	12.63
Total in manufactures	1,209,729,405	100.00	1,301,855,950	100.00

of New York in 1912[2] laid out a program for future work. The American Society for testing materials has also made additional specifications for various forms of copper.[3] Considering that 95 per cent of United States copper is made up of electrolytic and Lake brands, both more than 99.8 per cent pure, the choice of electric conductivity as standard for quality is to be expected. This standard, however, is not suited to most European brands which contain less than 99.8 per cent Cu, but have excellent wearing qualities, owing to the presence of As, Sb, Ni, etc.[4]

[1] *Rev. métal.*, 1909, VI, 1245.
[2] GUILLET, *op. cit.*, 1912, IX, 1037.
[3] *Proc. Am. Soc. Testing Materials*, 1913, XIII, 198–204, 213–220.
[4] LEWIS, *Met. Chem. Eng.*, 1912, X, 540.

TABLE VIII.—CHEMICAL ANALYSIS OF REFINED COPPER

Element	Lake, wire bar[a]	Lake, arsenical, ingot[a]	Electrolytic, wire bar[a]				Best selected English[a]
Cu + Ag	99.900	99.4385	99.970	99.895	99.9548	99.9780	99.5510
Cu	99.890	99.4131	99.967	99.893	99.953	99.976	99.530
Ag	0.0096 (2.8 oz.)	0.0254 (7.41 oz.)	0.0027 (0.79 oz.)	0.0020	0.0018	0.0020	0.0210
Pb	0.0031	0.0027	0.0024	0.0072	0.0010	0.0056	0.1331
Bi	0.0000	0.0000	0.0000	0.0000	0.0000	0.0000	0.0000
As	0.0062	0.3183	0.0006	0.0001	0.0000	0.0001	0.0071
Sb	0.0000	0.0000	0.0000	0.0006	0.0009	0.0008	0.0087
Se + Te	0.0020	n. d.	0.0000	0.0022	0.0026	0.0014	0.0066
Fe	0.0028	0.0056	0.0023	0.0028	0.0038	0.0044	0.0044
Ni	0.0090	0.0153	0.0030	0.0010	0.0028	0.0018	0.1112
Zn	0.0000	0.0000	0.0000	0.0000	0.0000	0.0000	0.0000
S	0.0016	0.0071	0.0026	0.0023	0.0026	0.0016	0.0074
O (by diff.)	0.0753	0.2143	0.0191	0.0888	0.0315	0.0063	0.1705
Conductivity, annealed	96.49	.....	100.84	99.78	100.45	100.70	
Conductivity, hard-drawn	93.84	.....	97.93	96.65	97.64	97.93	
Difference due to hard drawing	2.65	.....	2.91	3.13	2.81	2.77	
Tensile strength, pound per square inch	67,590	.....	65,000	67,800	66,300	66,550	
Twists in 6 in	17	.....	18	27	34	53	
Elongation per cent	103*	.....	1.65*	1.15†	1.04†	1.08†	
Bends, annealed	11	.....	14	14	14	22	
Diameter of wire, inches	0.080	.....	0.080	0.080	0.080	0.080	

Element	Casting copper[f]	Casting copper[b]	Lake[c]			Merchant bar, England[d]	Oker, Germany[e]	Wallaroo, Australia[a]	Mansfeld, Germany[e]
Cu + Ag	.....	99.45	99.950	99.930	99.935	99.904	99.397	99.648	99.6417
Cu	99.50	99.44	99.879	99.873	99.867	99.870	99.395	.....	99.6125
Ag	.....	0.01	0.071	0.057	0.068	0.034	0.072	.....	0.0292
Pb	0.05	.....	.....	trace	0.0011	.....	0.061	.....	0.020
Bi	....	0.01	.....	.....	.....	.....	0.052		
As	.....	0.02	0.0006	0.0099	0.0004	0.002	0.135	trace	0.0172
Sb	...	0.05	trace	trace	trace	.....	0.095	0.0007	0.0023
Se + Te									
Fe	0.06	0.38	0.0014	0.0063	0.0027	0.011	0.063	.....	0.0039
Ni	0.15	.....	0.0010	0.0108	trace	.....	0.064	0.237	0.2112
Zn	.....	.....	trace	0.0008	0.0005	0.013			
S	.....	0.002	0.0022	0.0064	0.0006	.....	0.001	.....	0.0024
O	trace	.....	0.045	0.056	0.064	0.068	0.1166‡	.....	0.00752‡
Sn	0.18								
Conductivity, annealed	.....	.....	101.0	95.7	101.1	.....	Co 0.012		

* In 8 in. † In 60 in. ‡ Determined.

[a] W. H. Bassett.

[b] *Brass World*, 1905, I, 95.

[c] J. B. COOPER, Private communication.

[d] *Elec. Rev.*, Mar. 3, 1897, p. 101.

[e] *Z. Berg. Hütten. u. Sal. Wes., i. Pr.*, 1873, XXI, 252, 254.

[f] Bay-Plant, Balbach S. & R. Co., Newark, N. J.; Great Falls, Mont.: BURNS, "Electrolytic Wire Bar," *Trans. A. I. M. E.*, 1913, XLVI; Collections of other analyses: KELLER, *Mineral Ind.*, 1898, VII, 243; HOLLARD BERTIAUX, *Rev. métals*, 1906, III, 205.

7. Impurities and Their Effects in General.[1]—Copper of commerce, as stated above, is not pure. It contains Cu_2O and foreign metals and their oxides, which affect the physical and chemical properties, and thereby the availability for use in the arts. Table VIII gives typical chemical analyses of some leading brands of today. They show that the copper produced at present is of a higher grade than that of former years, when copper contents of 97 to 98 per cent were not uncommon.[2] The total impurity in copper is small, but the number of elements composing it is large; and a small percentage of a single element may have a very decided influence upon the properties. The presence of two foreign substances in copper may intensify their respective harmful effects, or may neutralize them; they may also act independently and interfere with one another.

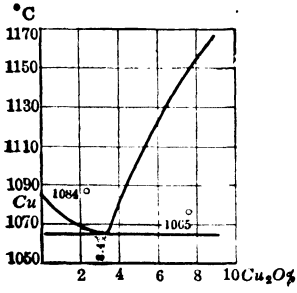

FIG. 8.—Alloy-series Cu-Cu_2O.

FIG. 9.—Set copper. × 100.

8. Oxygen.[3]—Oxygen is insoluble in copper. Nearly all the O is present as Cu_2O, which is the only copper oxide stable at the melting point of copper. Slade and Farrow[4] found that a mixture of Cu and Cu_2O liquefied at 1,195° C. and separated into two layers containing respectively 20 and 95 per cent Cu_2O. The equilibrium diagram of the Cu–Cu_2O series of alloys by Heyn[5] is given in Fig. 8. It has the characteristic V-shaped form of an alloy forming a eutectic mixture. The eutectic contains 3.45 per cent Cu_2O and solidifies at 1,064° C.[6] In fire-refining copper (§161) the metal is saturated with Cu_2O to form the

[1] HAMPE, *loc. cit.;* GREAVES, *J. Inst. Metals*, 1912, VII, 218; ARCHBUTT, *op. cit.*, 1912, VII, 262; JOHNSON, *op. cit.*, 1912, VIII, 192; 1913, X, 275; LAW, *op. cit.*, 1912, VIII, 222; TASSIN, *Metal Ind.*, 1912, XVIII, 275, 335, 447; LEWIS, *Met. Chem. Eng.*, 1912, X, 540; BAUCKE, *Intern. Z. Metallog.*, 1913, III, 195.

[2] KERL, B., "Metallhüttenkunde," Leipsic, 1881, pp. 189, 200, 221.

[3] See also "Refining Copper," §161.

[4] *Proc. Roy. Soc. Ser. A.*, 1912, LXXXVII, 524; *J. Inst. Metals*, 1913, IX, 207; *Met. Chem. Eng.*, 1913, XI, 165; *Z. Elektrochem.*, 1912, XVIII, 817.

[5] *Mitt. kgl. Versuchsanst.*, 1900, XVIII, 315; *Metallographist*, 1903, VI, 49; *Trans. A. I. M. E.*, 1904, XXXIV, 677.

[6] DEJEAN, *Rev. métal.*, 1906, III, 233; reply by Heyn, p. 543.

so-called set copper containing about 6 per cent Cu_2O, while refined copper contains 0.5 ± per cent Cu_2O, the amount varying with the pitch (ingot, wire bar, plate) to which the copper has been poled and with the character of the impurities present. Figures 9 to 11 are photomicrographs of cathode copper in three stages of fire refining. Figure 9 represents set copper with about 6 per cent Cu_2O; Fig. 10, partly refined copper; and Fig. 11 wire-bar copper with about 0.5 per cent Cu_2O. The amount of Cu_2O present in copper containing less than 3.45 per cent Cu_2O can be readily found by measuring on an enlarged photomicrograph with a planimeter the Cu areas in a given area, deducting them from the total area, which leaves the eutectic area, and calculating in this the percentage of Cu_2O. With a little practice close valuations can be made by

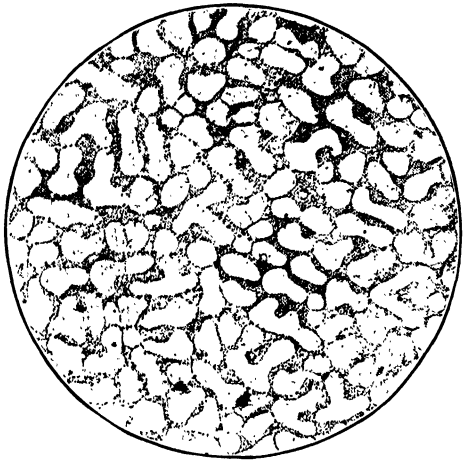

FIG. 10.—Partly deoxidized copper. × 100.

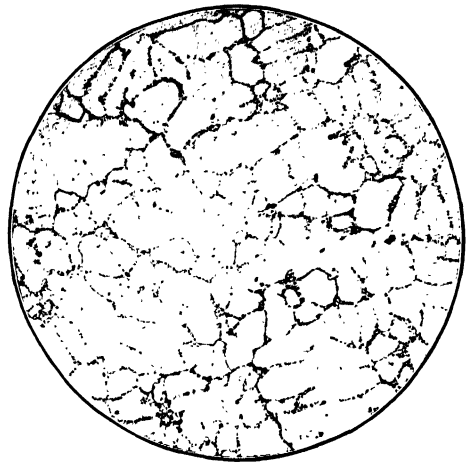

FIG. 11.—Renned copper. × 100.

examining a polished surface with the microscope, an operation which takes from 6 to 8 min.[1]

The method of Hofman, Green and Yerxa has been modified by Huntington and Desch[2] to secure greater accuracy, and much simplified by Bardwell.[3] The latter projects the image upon Duplex paper so as to cover a circle 15 to 16 in. in diameter, traces the outline with a hard pencil, cuts out the copper areas, weighs them and the residual network of eutectic on a chemical balance, and computes the O. From 4 to 5 determinations are made in one hour, and the results check closely.

The Cu_2O in Cu is not reduced by either As or Sb, but readily so by Sn, Zn, Mg, and Pb.[4]

The tensile strength of copper begins to be affected by 0.45 per cent Cu_2O, but not the malleability; this begins to diminish with 0.9 per cent Cu_2O.

[1] HOFMAN, GREEN, YERXA, *Trans. A. I. M. E.*, 1904, XXXIV, 671, 984.

[2] *Trans. Faraday Soc.*, 1908, IV, 51.

[3] *Trans. A. I. M. E.*, 1913, XLVI, 742.

[4] JOLIBOIS-THOMAS, *Rev. métal.*, 1913, X, 1264.

A systematic study of the effect of Cu_2O in copper has been made by Hanson, Marryat, and Ford.[1] Their general conclusion is that Cu_2O has only slight effect on the mechanical and physical properties.

9. Lead.—The constitution of the Cu–Pb alloy series has been investigated by Roberts-Austen.[2] Heycock and Neville,[3] Hiorns,[4] Friedrich and Leroux,[5] and Giolitti and Marantonio.[6] In Figs. 12 to 12*a* (Friedrich and Leroux), in area Cu 65 Pb, there are formed, upon cooling, crystals of Cu and mother metal; in that of *fCV*, crystals of Pb and mother metal; below the eutectic line and to the right of *fx*, crystals of Cu and eutectic; and to the left, crystals of Pb and eutectic. Alloys lying between 100 and 65 per cent Cu form homogeneous solutions above the liquidus, 1,084 to about 950° C.; as soon as the temperature reaches the liquidus, crystals of Cu separate and continue to do this until the point 65 per

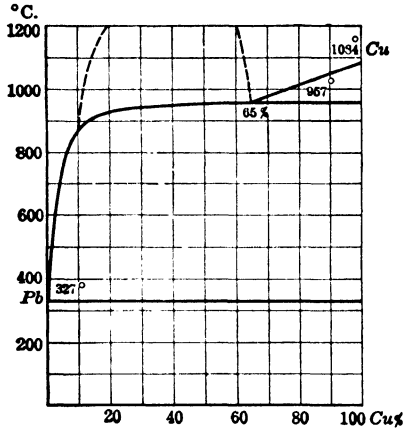

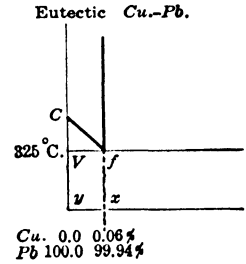

FIGS. 12–12*a*.—Alloy-series Cu-Pb.

cent Cu has been reached. With a further withdrawal of heat the temperature does not fall, but is kept constant by further separations of Cu until the composition of 65 per cent Cu–35 per cent Pb has been changed to that of 10 per cent Cu–90 per cent Pb; only now, after the complete disappearance of the former, does the temperature fall with further separations of Cu until the eutectic point *f* (0.06 per cent Cu, 99.94 per cent Pb) has been reached with 325° C., when complete solidification takes place. It is thus seen that in Cu, when cooled slowly, there will be found a little Pb, and in Pb a little Cu. If mixtures within the range of 10 and 65 per cent Cu, or 90 and 35 per cent Pb, are heated above 1,025° C., thoroughly stirred and poured into a chilled mold, an apparently homogeneous alloy will be obtained, which in reality is a conglomerate. Recent

[1] *J. Inst. Metals*, 1923, XXX, 197.
[2] *Fourth Report Alloys Research Comm.*, 1897, 51.
[3] *Philos. Trans. A.*, 1897, XLII, 189.
[4] *J. Soc. Chem. Ind.*, 1906, XXV, 618.
[5] *Metallurgie*, 1907, IV, 299.
[6] GUERTLER, "Metallographie," I, part 1, p. 597.

investigations by Friedrich and Waehlert[1] have fixed the critical temperature of the saturation-point curve between 65 and 10 per cent Cu at 1,025° C. with the critical point at about 35 per cent Cu.

The color of the alloys is a reddish-gray.

The effect of Pb upon the mechanical properties of Cu depends to a certain extent upon the amount of O present,[2] as the less the O, the smaller is the Pb permissible, because Pb reduces Cu_2O.[3] Thus O-free Cu with 0.05 per cent Pb is red-short, while O-bearing Cu can stand as much as 0.2 per cent and be worked cold or hot; Cu can contain as much as 0.675 $Pb_3As_2O_8$ or 1.45 per cent 2 $Cu_2O \cdot PbO$ and be only just red-short (Hampe). Jolibois and Thomas[4] have shown that As neutralizes the harmful effect of Pb, in that Pb forms a solid solution with Cu_3As. Ordinarily, it is held that Pb, not to exceed 0.1 per cent, makes Cu roll better, and that 0.2 per cent makes it brittle.[5] Forging tests of Archbutt[6] showed that 0.2 per cent Pb did not interfere with working at a red heat.

10. Bismuth.—Freezing-point curves have been drawn by Roland and Gosselin,[7] Hiorns,[8] Jeriomin,[9] and Portevin.[10] The curve of Portevin resembles that of Jeriomin. This has the V-shaped form of the eutectic with eutectic point lying at 0.25 per cent Bi, and the eutectic line extending to the borders of the diagram. As little as 0.02 per cent Bi, which is mostly present in the metallic state, makes Cu red-short (Hampe). Baucke[11] found that 0.025 per cent makes it brittle at a red heat, 0.05 per cent makes it cold-short,[12] 0.1 per cent[13] very brittle (Hampe). Lawrie[14] found that Cu with over 0.0005 per cent Bi could not be drawn into wire. As[15] and Sb[16] counteract to some extent the bad effect of Bi.[17] It is generally accepted that Bi_2O_3 is less injurious than Bi, $Cu_2O \cdot Bi_2O_3$ less than Bi_2O_3, and that $Bi_2O_3 \cdot xSb_2O_5$ can be present to the extent of 0.7 per cent without producing either cold- or hot-shortness. The alloys are coarsely granular and have a strong luster.

[1] *Metall u. Erz*, 1913, x, 578.

[2] WESTMANN, *Oesterr. Z. Berg. Hüttenw.*, 1903, LI, 655.

[3] JOLIBOIS and THOMAS, *Rev. métal.*, 1913, x, 1264.

[4] *Loc. cit.*

[5] LEWIS, *Engineering*, 1903, LXXVI, 753; *Eng. Mining J.*, 1904, LXXVII, 284; *Am. Mfr.*, 1903, LXXIII, 903; *Mineral Ind.*, 1903, XII, 127; *Met. Chem. Eng.*, 1912, x, 540.

[6] *J. Inst. Metals*, 1912, VII, 265.

[7] *Bull. soc. d'Enc.*, 1896, I, 1310; "Contributions à l'étude des alliages," 1901, 109.

[8] *J. Soc. Chem. Ind.*, 1906, XXV, 616; *Electrochem. Met. Ind.*, 1905, III, 396.

[9] *Z. anorg. Chem.*, 1907, LV, 412.

[10] *Rev. métal.*, 1907, IV, 1077.

[11] *Intern. Z. Metallog.*, 1913, III, 195.

[12] LAWRIE, *Trans. A. I. M. E.*, 1909, XL, 604, believes that the figures 0.025 and 0.05 per cent ought to be reversed.

[13] ROBERTS-AUSTEN, *Second Report Alloys Research Comm.*, 1893, p. 121.

[14] *Loc. cit.*

[15] JOHNSON, *J. Inst. Metals*, 1910, VIII, 570.

[16] PARRAVANO, *Intern. Z. Metallog.*, 1911, I, 75.

[17] ARCHBUTT'S "Forging Tests," *J. Inst. Metals*, 1912, VII, 264.

11. Iron.—The only freezing-point curve drawn is that of Sahmen.[1] It appears to show that Cu and Fe form heterogeneous mixtures except at the terminals of the curve, where Cu forms a solid solution with from 2 to 3 per cent Fe, and Fe the same with a small amount of Cu. The first solution is found in the incomplete diagram of Heycock and Neville[2] and shown in the photomicrograph of Stead;[3] the latter states that Cu with up to 2.73 per cent Fe shows only a single micrographical constituent, and that Fe with as much as 8 per cent Cu appears free from any copper-colored compound. Ruer and Fick[4] draw the limits of solid solutions at 3 per cent Fe and 9 per cent Cu. Pfeiffer,[5] on the other hand, considers that Fe and Cu form heterogeneous mixtures throughout the whole series of alloys. The evidence for solid solutions at the terminals appears convincing. Iron is always likely to be present in Cu; it makes it hard and brittle, but less so than does Pb; the red color of Cu changes gradually to gray with an increase of Fe.

12. Manganese.—Copper and manganese form alloys that are frequently called manganese-bronzes. Their constitution has been investigated by Wolgodin,[6] Schemtuny, Urasow and Rykowskow,[7] and Sahmen.[8] The curves of the last two investigators show a solid solution; the curve of Sahmen has an apparent minimum between 30 and 40 per cent Mn. The alloys become harder as the percentage of Mn increases. With from 0 to 80 per cent Cu, the alloys are gray; beyond this they become yellowish; and with 96 per cent Cu, reddish. All the alloys are non-magnetic. An addition of from 2 to 3 per cent Mn to Cu[9] increases the tensile strength and the elastic limit, but not materially the hardness. An alloy with 8 per cent Mn is malleable and ductile; one with 12 to 15 per cent Mn is brittle; such alloys ought to be free from Pb or Sb.

There exist cupro-ferro-manganese alloys prepared by the addition of ferro-manganese to Cu.[10]

13. Nickel.—The leading freezing-point curves published are those of Guertler and Tammann,[11] Kurnakow and Schemtuny,[12] and Tafel.[13] The two metals form solid solutions throughout. The alloys rich in Cu are not attracted by the magnet; those rich in Ni are. Nickel makes Cu pale red and hard; 0.3 per cent

[1] *Z. anorg. Chem.*, 1908, LVII, 9; *Metallurgie*, 1908, V, 298; *Rev. métal.*, 1908, V, 366.

[2] *Philos. Trans. A.*, 1897, CLXIX, 189.

[3] *J. Iron Steel Inst.*, 1901, II, 108.

[4] *Ferrum*, 1913, XI, 39.

[5] *Metallurgie*, 1906, III, 281.

[6] *Rev. métal.*, 1907, IV, 25.

[7] *Z. anorg. Chem.*, 1908, LVII, 253; *Rev. métal.*, 1908, V, 371.

[8] *Z. anorg. Chem.*, 1908, LVII, 201; *Rev. métal.*, 1908, V, 373.

[9] LEWIS, *J. Soc. Chem. Ind.*, 1902, XXI, 842; GUILLET, "Étude industrielle des alliages," Dunod-Pinat, Paris, 1906, p. 752; HEUSSLER, *Verhandel. Verein. Beförd. Gewerbefl.*, 1903, LXXXII, 277; *Iron Age*, June 28, 1904, p. 18.

[10] PARRAVANO, *Intern. Z. Metallog.*, 1913, IV, 171; *Metall u. Erz*, 1913, X, 503; *J. Inst. Metals*, 1913, IX, 213.

[11] *Z. anorg. Chem.*, 1907, LII, 25; *Rev. métal.*, 1908, V, 375.

[12] *Z. anorg. Chem.*, 1907, LIV, 151; *Rev. métal.*, 1908, V, 377.

[13] *Metallurgie*, 1908, V, 343, 375.

Ni shows no effect, 2 to 3 per cent greatly increases the hardness and raises the tensile strength. The presence of Sb increases the effects of Ni; hence, in the presence of from 2 to 3 per cent Ni, the Sb ought to be absent. However, 0.3 Ni + Sb does not affect the malleability in cold-working. According to Stahl,[1] Mansfeld copper with one-tenth per cent Ni has a tensile strength of 31,000 to 47,000 lb. per square inch; an elongation in 8 in. of 39.5 to 46.0 per cent; and a reduction of area of 50.5 to 60.7 per cent. The Cu-Ni-Fe series of alloys has been investigated by Vogel.[2]

14. Cobalt.—The Cu-Co alloys are at present of no industrial importance. Freezing-point curves have been traced by Konstantinow[3] and Sahmen.[4]

15. Arsenic.—Passing over the earlier work of Hiorns,[5] there exist two freezing-point curves by Friedrich[6] and by Bengough and Hill.[7] The revised curve of Friedrich (Fig. 13) shows the following: Cu forms with As a solid solution reaching with 684° C. a maximum in 4 per cent As at the terminus of the eutectic line; the eutectic with 78.5 per cent Cu is made up of the solid solution of Cu with 4 per cent As and the compound Cu_3As; the summit, 830° C., represents Cu_3As with 71.8 per cent Cu. A hidden chemical compound, Cu_5As_2 (67.9 per cent Cu), is formed at 710° C. Nothing is definitely settled regarding the eutectic line at 604° C., and the transformation line at 307° C. Bengough and Hill confirm the existence of the compounds Cu_3As_2 and Cu_5As_2, but believe that there exists a series of solid solutions between these compounds.

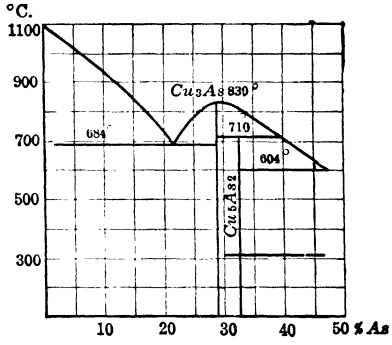

FIG. 13.—Alloy-series Cu-As.

The mechanical properties of Cu are not harmed by 0.5 per cent As; with 0.8 per cent As, copper can be drawn into the finest wire; 1 per cent As begins to cause red-shortness.[8] The amount of O present in Cu has a decided influence upon the permissible quantity of As, as As does not reduce Cu_2O;[9] thus 0.4 per cent $Cu_2O \cdot xAs_2O_5$ has no effect whatever upon the mechanical properties of Cu, while more than 0.4 per cent causes cold-shortness. Stahl[10] states that Cu with 0.30 to 0.35 per cent As has a tensile strength of 28,000 to 29,200 lb. per square inch; an elongation of 33 to 44 per cent with a reduction of area of 47

[1] *Op. cit.*, 1909, VI, 610, 1910, VII, 14; discussions by Heckman, *op. cit.*, 1910, VI, 760.

[2] *Z. anorg. Chem.*, 1910, LXVII, 1.

[3] *Rev. métal.*, 1907, IV, 983; *Mineral Ind.*, 1907, XVI, 377.

[4] *Z. anorg. Chem.*, 1908, LVII, 1; *Rev. métal.*, 1908, V, 364.

[5] *Electrochem. and Met.*, 1903–04, III, 648, 734; *Electrochem. Ind.*, 1904, II, 170; *Mineral Ind.*, 1903, XII, 124; *J. Inst. Metals*, 1910, III, 54.

[6] *Metallurgie*, 1905, II, 484; 1908, V, 529.

[7] *J. Inst. Metals*, 1910, III, 34.

[8] See ROBERTS-AUSTEN, *Second Report Alloys Research Comm.*, 1893, p. 119.

[9] JOLIBOIS and THOMAS, *Rev. métal.*, 1913, X, 1204.

[10] *Metallurgie*, 1909, VI, 611.

to 62 per cent. The following table of Lewis[1] shows the influence of As upon the tensile strength of Cu; other data are given by Bengough and Hill.[2] Lewis[3] states that Cu with from 1 to 1.37 per cent As rolls very well; that the tensile strength is from 6,000 to 10,000 lb. higher than that of ordinary sheet copper; and that the elongation is not reduced. However, 0.6 per cent As is generally considered the limit for good copper. Bengough and Hill found that Cu with less than 1 per cent As was ruined when annealed in a reducing atmosphere above 650° C. The effects of As upon electric conductivity and absorption of gases has been discussed in §4.

TABLE IX.—INFLUENCE OF ARSENIC UPON TENSILE STRENGTH OF COPPER

As, per cent	Tensile strength, pounds per square inch	Elongation, per cent	Elastic limit, pounds per square inch
0.00	26,800	25.0	14,000
0.24	33,840	27.5	20,500
0.53	36,760	29.5	19,020
0.75	36,620	21.0	17,820
0.94	36,040	25.0	18,020
1.37	37,660	28.0	20,180
1.80	35,660	20.0	23,040

16. Antimony.—The constitution of copper-antimony alloys has been investigated by Baikoff[4] and Hiorns.[5] Baikoff's curve is shown in Fig. 14. Starting with the Sb end at 629° C., Sb is seen to form a solid solution α with Cu reaching its maximum with 10 per cent Cu; B (524° C., 25 per cent Sb) is the eutectic point of the mixture of solid solution α and chemical compound Cu_2Sb, the eutectic line extending to 51 per cent Cu. This compound, which has a characteristic purple color, is formed at 584° C. by the grayish compound Cu_3Sb combining with Sb according to $2\ Cu_3Sb + Sb = 3\ Cu_2Sb$. The compound Cu_3Sb (61.5 per cent Cu) solidifies at 681° C.; between 681 and 584° C., the solid solution β of Cu_3Sb and Sb (51 to 53.5 per cent Cu) separates, and is transformed at 584° C. in part into Cu_2Sb and β. Between 53.5 and 69 per cent Cu the solid solution β separates unchanged. Between 69 and 96 per cent Cu there separates above 630° C. the solid solution of Cu_3Sb and γ, and a solid solution of Cu with 2.5 per cent Sb; below 630° C. the former is transformed into β and γ solution; below 407° C. the last transformation takes place,

[1] *J. Soc. Chem. Ind.*, 1901, XX, 254.

[2] *J. Inst. Metals*, 1910, III, 37; JOHNSON, *J. Inst. Metals*, 1910, IV, 163; *Met. Chem. Eng.*, 1910, VIII, 570; *J. Inst. Metals*, 1912, VIII, 192; 1913, X, 275; LEWIS, *Met. Chem. Eng.*, 1912, X, 540; GREAVES, *J. Inst. Metals*, 1912, VII, 218; ARCHBUTT, *op. cit.*, 1912, VII, 262; LAW, *op. cit.*, 1912, VIII, 222; BAUCKE, *Intern. Z. Metallog.*, 1913, III, 195.

[3] *Engineering*, 1903, LXXVI, 733; *J. Soc. Chem. Ind.*, 1903, XXII, 1351.

[4] *Bull. soc. d'Encour.*, 1903, I, 626; *Rev. métal. Extr.*, 1905, II, 433.

[5] *J. Soc. Chem. Ind.*, 1906, XXV, 616.

leaving on the antimony side of the ordinate 61 per cent Cu, the mixture of Cu_2Sb and Cu_3Sb, and on the copper side γ and Cu_3Sb.

The effect of Sb upon the mechanical properties of Cu is similar to that of As. Sb does not reduce Cu_2O.[1] The tensile strength is increased by Sb. Thus Hampe[2] showed that Cu with 0.26 per cent Sb gave 73,800 lb., and with 0.529 per cent 77,900 lb. per square inch; the sample with 0.529 per cent Sb could still be drawn to a fine wire; 1 per cent Sb caused cold-shortness. The

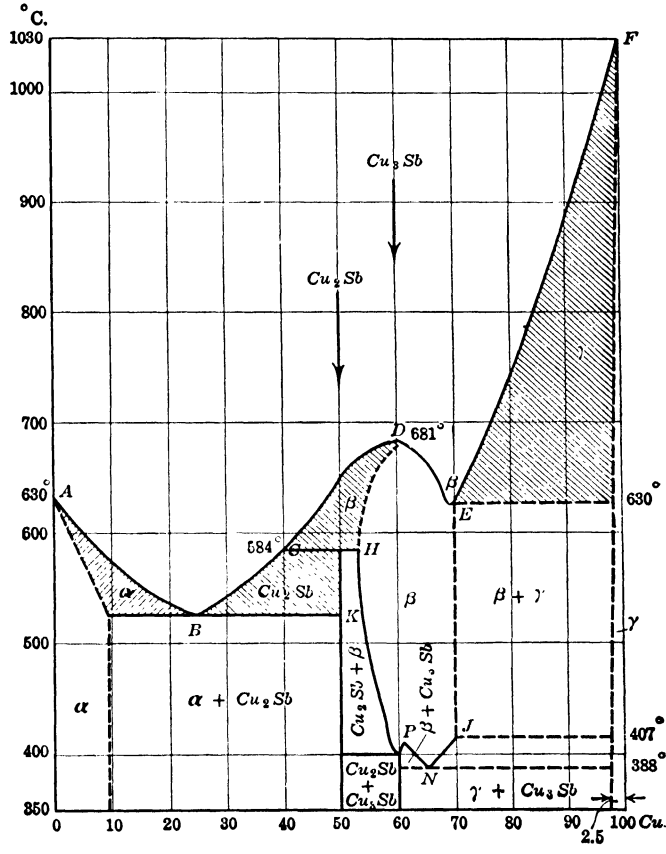

FIG. 14.—Alloy-series Cu-Sb.

so-called copper-mica ($6\ Cu_2O{\cdot}Sb_2O_5 + 8\ NiO{\cdot}Sb_2O_5$), gold-colored to yellowish-green scales, formed in refining Cu containing both Sb and Ni, can be present to the extent of 0.726 per cent and not interfere with malleability, but does effect ductility; 1.44 per cent of the salt makes Cu red-short. It is generally held that Cu should not contain over 0.05 per cent Sb, as Cu with 0.1 per cent Sb has been found to crack at the edges when it is rolled,[3] and cannot be bent

[1] JOLIBOIS and THOMAS, *Rev. métal.*, 1913, X, 1264.

[2] *Chemiker Z.*, 1892, XVI, 726, *Second Report Alloys Research Comm.*, 1893, p. 120.

[3] LEWIS, *Engineering*, 1903, LXXVI, 753; *Am. Mfr.*, 1903, LXXIII, 903; *Met. Chem. Eng.*, 1912, X, 540.

without breaking. Other data are given by Greaves,[1] Archbutt,[2] Johnson,[3] and Law.[4]

17. Sulphur.[5]—Sulphur is present in Cu as Cu_2S. The freezing-point curve Cu-Cu_2S of Heyn and Bauer,[6] shown in Fig. 15, resembles that of Pb-Cu. Starting with Cu_2S, its melting point of 1,127° C. is lowered by additions of Cu; when the liquid is cooled and reaches the branch 1,127 to 1,102° C., metallic Cu separates with a lowering of temperature until the point at 1,102° C. has been reached; a further separation of Cu causes no fall in temperature until the composition has been changed into that of the left terminus of 1,102° C., when upon further separation of Cu there is a quick descent of the curve to the eutectic point, 3.8 per cent Cu_2S, 1,067° C., followed by a quick rise to the freezing point 1,084° C. of Cu. Copper is converted to Cu_2S by boiling in sulphur.[7]

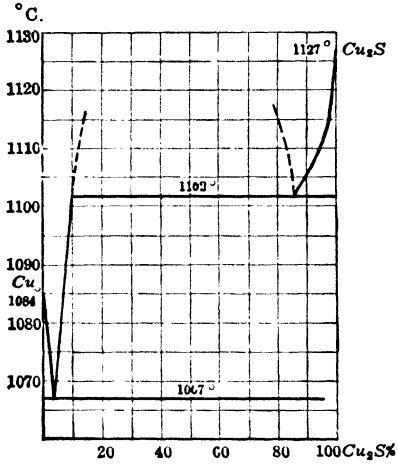

FIG. 15.—Alloy-series Cu-Cu_2S.

Hampe has shown that Cu with 0.25 per cent S is still malleable, and that 0.5 per cent S makes it cold-short, but not red-short. On the other hand, Lewis[8] found that Cu with 0.1 per cent S cracked badly on rolling and bent badly; and that 0.5 per cent Mn or Al counteracted the bad effect of S. Sperry[9] found that as little as 0.1 per cent S caused blowholes; and that the Cu could be forged, but would not stand bending without cracking.

18. Selenium and Tellurium.[10]—These two elements are found in pig copper in very small quantities, 0.007 per cent in Montana copper, according to Keller;[11] and are removed by electrolytic refining process to such an extent that they rarely appear in market copper.

Cuprous selenide, (Cu_2Se)[12] melts at 1,113° C. and forms with Cu an eutectic containing 2 to 3 per cent Cu.

[1] *J. Inst. Metals*, 1912, VII, 218.
[2] *Op. cit.*, 1912, VII, 262.
[3] *Op. cit.*, 1912, VIII, 192.
[4] *Op. cit.*, 1912, VIII, 222.
[5] STAHL, *Berg. Hüttenm. Z.*, 1890, XLIX, 99, 127; HINRICHSEN and BAUER, *Metallurgie*, 1907, IV, 315, *Oesterr. Z. Berg. Hüttenw.*, 1907, LV, 473.
[6] *Metallurgie*, 1906, III, 76.
[7] HAYWARD, *Met. Chem. Eng.*, 1918, XVIII, 650.
[8] *Engineering*, 1903, LXXVI, 73; *Am. Mfr.*, 1903, LXXIII, 904.
[9] *Brass World*, 1913, IX, 91.
[10] Microscopical tests: HEYN and BAUER, *Metallurgie*, 1906, III, 84; HINRICHSEN and BAUER, *op.cit.*, 1907, IV, 315; *Oesterr. Z. Berg. Hüttenw.*, 1907, LV, 473.
[11] *Min. Ind.*, 1898, VII, 241.
[12] FRIEDRICH and LEROUX, *Metallurgie*, 1908, V, 356.

The constitution of Cu-Te alloys has been investigated by Chikashigé[1] and Pouchine.[2] There exist, according to the former, a gray Cu_2Te, a violet Cu_4Te_3, an eutectic Te + Cu_4T_3, and several solid solutions; the latter found an additional compound CuTe. The metal was discovered by Egleston[3] in copper, which upon analysis showed 0.08 per cent. Te, and the copper was red-short.

19. Silver.—The first freezing-point curve, by Heycock and Neville,[4] determined the general eutectic character of the series of alloys; Friedrich and Leroux[5] carried the work further; and Lepkowski[6] completed the curve, fixing the extent of the solid solutions at the terminals. The curve of the last, with atomic changed into weight per cent, is given in Fig. 16. The eutectic point with 28 per cent Cu lies at 778° C.; solid solutions are formed at the ends of the eutectic line, Cu holding 2 per cent Ag, and Ag 7 per cent Cu. A knowledge of the structure is of importance for the correct sampling[7] of copper ingots

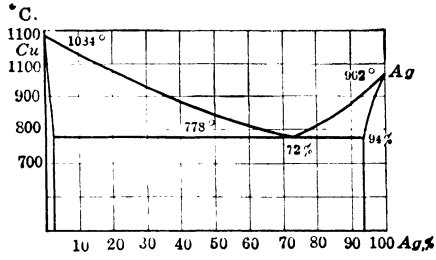

FIG. 16.—Alloy-series Cu-Ag.

that carry precious metal. The electric conductivity and hardness of Cu-Ag alloys have been studied by Kurnakow, Puschin and Senkowski,[8] and mechanical properties, hot and cold, by Johnson.[9]

20. Lead and Silver.—The investigation of Friedrich and Leroux[10] has shown that these metals form a ternary eutectic, with Cu 0.5 per cent, Ag 2.0 per cent, Pb 97.5 per cent, which freezes at from 0.5 to 1° C. below the binary eutectic of Ag-Pb (300° C.).

21. Gold.—The first freezing-point curve was drawn by Roberts-Austen and Rose.[11] It has been supplemented by the work of Kurnakow and Schemtuny.[12]

[1] *Z. anorg. Chem.*, 1907, LIV, 50; *Rev. métal.*, 1908, V, 392.

[2] *Op. cit.*, 1907, IV, 929.

[3] *Trans. A. I. M. E.*, 1881–82, X, 493.

[4] *Philos. Trans. A.*, 1897, CLXXXIX, 25.

[5] *Metallurgie*, 1907, IV, 297 to 9.

[6] *Z. anorg. Chem.*, 1908, XLIX, 289.

[7] KELLER, *Trans. A. I. M. E.*, 1897, XVII, 106; 1911, XLII, 905; *Eng. Mining J.*, 1912, XCIII, 703, 729; LEDOUX, *School Mines Quart.*, 1897–98, XIX, 366; WRAITH, *Trans. A. I. M. E.*, 1910, XLI, 318; LIDDELL, *Eng. Mining. J.*, 1910, XC, 897, 953, 1095; 1911, XCII, 1173; SMOOT, *op. cit.*, 1912, XCIII, 1213.

[8] *Z. anorg. Chem.*, 1910, LXVIII, 123; *School Mines Quart.*, 1912, XXXIII, 405.

[9] *J. Inst. Metals*, 1910, IV, 163.

[10] *Metallurgie*, 1907, IV, 293.

[11] *Proc. Roy. Soc.*, 1901, LXVII, 105.

[12] *Z. anorg. Chem.*, 1907, LIV, 159.

They show that the two metals form solid solutions throughout with a low point at 82 per cent Au, as seen in Fig. 17. This disposes of the supposed existence of definite chemical compounds.[1] The ternary series Cu-Au-Ag has been studied by Jänecke.[2]

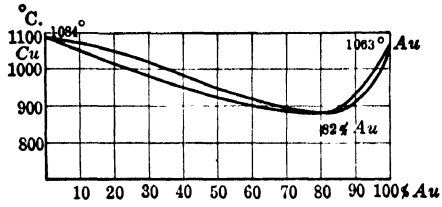

FIG. 17.—Alloy-series Cu-Au.

22. Minor Metals.—The following freezing-point curves are at present of little metallurgical importance: Cu-Ca,[3] Cu-Mg,[4] Cu-Cd,[5] Cu-Tl,[6] Cu-Pd,[7] Cu-Pt,[8] Cu-Va,[9] Cu-W,[10] Cu-Ti[11] Cu-Cr,[12] Cu-Cd-Sb.[13]

[1] PEARCE, *Trans. A. I. M. E.*, 1884–85, XIII, 738.

[2] *Metallurgie*, 1911, VIII, 597; *J. Inst. Metals*, 1911, VI, 331.

[3] DONSKI, *Z. anorg. Chem.*, 1908, LVII, 218; *Rev. métal.*, 1908, V, 360; BENSELL, *Metall u. Erz*, 1914, XI, 10, 46.

[4] URSAKOW, *Chem. Centralblatt*, 1908, I, 1038; *Rev. métal.*, 1908, V, 371; SAHMEN, *Z. anorg. Chem.*, 1908, LVII, 26.

[5] SAHMEN, *op. cit.*, 1906, XLIX, 301; *Rev. métal.*, 1908, V, 362.

[6] DOERINKEL, *Z. anorg. Chem.*, 1906, XLVIII, 185; *Rev. métal.*, 1908, V, 395.

[7] RUER, *Z. anorg. Chem.*, 1906, LI, 223; *Rev. métal.*, 1908, V, 386.

[8] DOERINKEL, *Z. anorg. Chem.*, 1907, LIV, 335; *Rev. métal.*, 1908, V, 388.

[9] GUILLET, *Rev. métal.*, 1906, III, 171; *Génie civil*, 1905, XLVII, 147; NORRIS, *J. Franklin Inst.*, 1911, CLXXI, 561.

[10] GUILLET, *Rev. métal.*, 1906, III, 171; *Génie civil*, 1905, XLVII, 147.

[11] ROSSI, *Electrochem. Met. Ind.*, 1908, VI, 257; 1909, VII, 88; BENSELL, *Metall u. Erz*, 1914, XI, 10, 46.

[12] GUILLET. *Rev. métal.*, 1906, III, 171; *Génie civil*, 1905, XLVII, 147; HINDRICHS, *Z. anorg. Chem.*, 1908, XLIX, 414; *Electrochem. Met. Ind.*, 1909, VII, 34.

[13] SCHLEICHER, *Intern. Z. Metallog.*, 1912, III, 103.

CHAPTER IV

INDUSTRIAL ALLOYS

23. Industrial Alloys in General.[1]—Copper forms the basis of a large number of important alloys. As a rule, they are more fusible and more fluid than copper, give sounder castings, are harder, less malleable, and less corrodible.[2]

As regards the structure, it may be said that alloys in which copper forms an unsaturated solution with another metal show a high degree of toughness and malleability, while alloys in which copper forms an intermetallic compound or solid solutions with the compounds of the latter are usually hard and brittle.

The solubility of gases in copper alloys[3] is similar to that in copper.[4] Thus the solubility of SO_2 increases with the rise in temperature and is proportional to the square root of the gas pressure.

The mechanical properties of the alloys are greatly affected by a rise in temperature.[5] The behavior of copper has been illustrated in Fig. 4; examples of alloys are given in Figs. 25, 26, 37, 38, 39.

In the preparation of alloys[6] the pouring temperature shows a decided influence upon the closeness of the grain and thereby upon the strength of the product.

The leading copper alloys are those with zinc, tin, aluminum, gold (§21), and silver (19); of secondary importance are the alloys with phosphorus, silicon, and manganese, which are reviewed first.

[1] JAPING, E., "Kupfer und Messing," Hartleben, Leipsic, 1883; GUETTIER, A., "Le fondeur en métaux," Bernard, Paris, 1890; WÜST, F., "Handbuch der Metallgiesserei," Voigt, Weimar, 1897; THURSTON, R. H., "A Treatise on Brasses, Bronzes and other Alloys," Wiley, New York, 1900; GUILLET, L., "Les alliages métalliques," Dunod-Pinat, Paris, 1906; BRANNT, W. T., "The Metallic Alloys," Baird, Philadelphia, 1908; KRUPP, A., "Die Legierungen," Hartleben, Leipsic, 1909; SEXTON, A. H., "Alloys, non-ferrous," Scientific Pub. Co., Manchester, 1909; LAW, E. F., "Alloys and Their Industrial Applications," Griffin & Co., London, 1913; BUCHANAN, J. F., "Practical Alloying," Penton Pub. Co., Cleveland, Ohio, 1910; KAISER, E. W., "Zusammensetzung der Gebräuchlichen Metallegirungen," Knapp, Halle, 1911–12; SCHOTT, E. A., "Die Metallgiesserei," Voigt, Leipsic, 1913; HIORNS, A. H., "Mixed Metals and Metallic Alloys," Macmillan, London, 1913; BUCHNER, G., "Die Metallfärbung," Krayn, Berlin, 1910; BROWN, W. N., "Dipping, Burnishing, Lacquering, etc.," Scott, Greenwood & Sons, London, 1912; GOWLAND, "History," *J. Inst. Metals*, 1912, VII, 23.

[2] DIEGEL, *Verhandel. Verein. Beförd. Gewerbefl.*, 1899, LXXVIII, 313; 1903, LXXXII, 93, 119, 157; BENGOUGH and BENGOUGH and JONES, *Reports of Corrosion Comm.*, *J. Inst. Metals*, 1911, V, 28, 1913, X, 13.

[3] SIEVERT and BERGNER, *Z. physik. Chem.*, 1913, LXXXII, 257; *J. Inst. Metals*, 1913, IX, 231.

[4] See §4.

[5] GRARD, *Rev. métal.*, 1909, IV, 1069; WEIDIG, *Verhandel. Verein. Beförd Gewerbefl.*, 1911, XC, 455, 525; JOHNSON, *Met. Chem. Eng.*, 1911, IX, 399; BENGOUGH, *J. Inst. Metals*, 1912, VII, 123; HUNTINGTON, *op. cit.*, 1912, VIII, 126; MÜLLER, *Metall u. Erz*, 1913, I, 219.

[6] GILLETT, *Eighth Internat. Congress Appl. Chem.*, New York, 1912, II, 105.

The melting points of the following common industrial alloys have been determined by Gillett and Brown.[1]

TABLE X.—MELTING POINTS OF SOME COMMON INDUSTRIAL ALLOYS

Alloy	Composition desired, per cent				Composition by analysis, per cent				Melting point (liquidus), ° C.
	Cu	Zn	Sn	Pb	Cu	Zn	Sn	Pb	
Gun metal	88	2	10	..	....	....	....	....	995
Leaded gun metal	85½	2	9½	3	85.4	1.9	9.7	3.0	980
Red brass	85	5	5	5	....	....	....	....	970
Low-grade red brass	82	10	3	5	81.5	10.4	3.1	5.0	980
Leaded bronze	80	..	10	10	....	....	....	....	945
Bronze with zinc	85	5	10	..	84.6	5.0	10.4	....	980
Half yellow, half red	75	20	2	3	75.0	20.0	2.0	3.0	920
Cast yellow brass	67	31	....	2	66.9	30.8	....	2.3	895
Naval brass	61½	37	1½	..	61.7	36.9	1.4	....	855
	Cu	Zn	Sn	Fe	Al	?		Mn	
Manganese bronze	56	41	0.9	1.5	0.45	....	....	0.15	870

24. Phosphor-copper.—The constitution of these alloys is shown by the curve of Heyn and Bauer[2] (Fig. 18). This curve shows an eutectic with 8.27 per cent P melting at 707° C.; the chemical compound Cu_3P with 14.1 per cent P freezing at 1,100° C.; one solid solution of Cu with a maximum of 0.175 per cent P, and another of Cu_3P with a probable second chemical compound Cu_5P_2.[3]

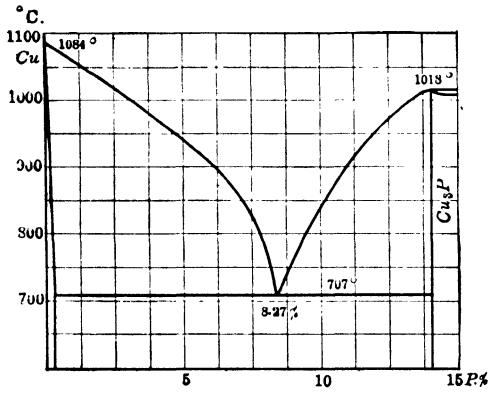

FIG. 18.—Alloy-series Cu-P.

Alloys are prepared in two ways; either by plunging stick P, held in an inverted cup,[4] into Cu, melted in a crucible, and keeping it submerged until it has been taken up, or by causing fused Cu to combine with P vapor. The apparatus for the second method, shown in Fig. 19,[5] consists of the crucible *A* clamped to the funnel *B* with discharge opening *c*. Phosphorus is placed in *A* and molten copper poured into *B*. The phosphorus in *A* is vaporized and forced to pass through the copper as it flows through *c*. As an alloy containing over 14.1 per cent P gives off P upon heating, alloys with over 14 to 15 per cent P cannot be

[1] Bureau Mines, *Tech. Paper* 60, 1913.
[2] *Z. anorg. Chem.*, 1907, LII, 131; *Metallurgie*, 1907, IV, 242, 257; *Rev. métal.*, 1908, V, 377.
[3] HUNTINGTON and DESCH, *Trans. Faraday Soc.*, 1908–09, IV, 51.
[4] WICKHORST, *Iron Age*, Mar. 25, 1897, p. 2.
[5] HIORNS, A. H., "Mixed Metals," Macmillan, New York, 1913, p. 219.

produced by fusion. Heyn states that alloys with as much as 20 per cent P can be produced by mixing Cu filings and red P in crucibles, connected in series wash-bottle fashion, and heating one at a time to 300 to 400° C., but not over 700° C., when the vapors from the crucible that is being heated will be condensed by the others.

The commercial alloy contains from 9 to 15 per cent P; it is steel-gray, so hard that it can be filed only with difficulty, fine-grained, and brittle.

Small additions of P make Cu hard; Cu with 0.05 to 0.10 per cent P and not over 0.04 per cent O is still easily rolled.[1] Hiorns[2] found that Cu with 0.5 per cent P rolled well, giving smooth edges; and Münker[3] maintains that pure copper with 1 per cent P may be rolled hot or cold, but that the ductility is much reduced by 0.2 per cent P. The constitutional diagram shows that with over 0.175 per cent P the eutectic, containing hard brittle Cu_3P, separates.

Use of Phosphorus-copper Alloys.—The principal use of the commercial alloy is in the manufacture of the so-called phosphor-bronze; it is added to Cu that is to be rolled, as the metal appears to work more evenly, owing to the deoxidation of the Cu_2O present. It has been suggested for use in the refining of coarse copper in order to assist in the removal of O according to $6\,Cu_2O + 2\,P = 10\,Cu + 2\,CuO{\cdot}P_2O_5$. Alloys of Cu and Mn[4] have been used for this purpose. Stahl[5] shows that the addition of such alloys increases the specific gravity of commercial Cu by reducing the Cu_2O that is present and by diminishing the absorbing power for gas.

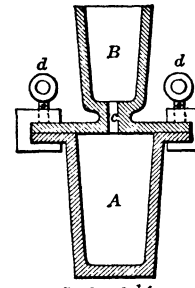

Scale of 1/16

FIG. 19.—Apparatus for preparing phosphor-copper.

25. Silicon-copper.[6]—The freezing-point curve of Rudolfi[7] (Fig. 20) replaces for the present the older approximations[8] of the constitution of copper-silicon alloys, although objections have been made to some of it features.[9] Starting at the Cu end of the curve, it is seen that Cu forms with Si a solid solution reaching 4.5 per cent Si, next comes a hidden chemical compound $Cu_{19}Si_4$ (8.59 per cent Si) which forms with the second chemical compound Cu_3Si (12.95 per cent

[1] LEWIS, *loc. cit.; Met. Chem. Eng.*, 1912, X, 540.

[2] *J. Soc. Chem. Ind.*, 1906, XXV, 622.

[3] *Metallurgie*, 1912, IX, 185; *J. Inst. Metals*. 1912, VII, 272.

[4] RÖSSLER, *Berg. Hüttenm. Z.*, 1878, XXXVII, 370; *Z. Berg. Hütten. u. Sal. Weseu. i. Pr.*, 1879, XXVII, 14; *Eng. Mining J.*, 1880, XXIX, 317; LEWITZKY, *Berg. Hüttenm. Z.*, 1880, XXXIX, 64; *Rev. Un. Min.*, 1879, VI, 24.

[5] *Berg. Hüttenm. Z.*, 1901, LX, 78.

[6] PHILLIPS, *Metallurgie*, 1907, IV, 587, 613; *Electrochem. Met. Ind.*, 1907, V, 468; BARADUC and MULLER, *Rev. métal.*, 1910, VII, 711; FRILLEY, *op. cit.*, 1911, VIII, 511.

[7] *Z. anorg. Chem.*, 1907, LIII, 216; *Metallurgie*, 1907, IV, 851; *Rev. métal.*, 1908, V, 390.

[8] DECHALMOT, *Am. Chem. J.*, 1897, XIX, 118, 871; 1896, XVIII, 95; 1898, XX, 437; LEBEAU, *Sixth Internat. Congress Appl. Chem.*, 1906, II, 411; VIGOUROUX, *Compt. rend.*, 1896, CXXII, 318; 1905, CXLI, 890; 1906, CXLII, 87; 1907, CXLIV, 1214.

[9] BORNEMANN, *Metallurgie*, 1907, IV, 852; GUERTLER, *Physik. Chem. Centralblatt*, 1907, IV, 576; RUDOLFI, *op. cit.*, 1908, V, 223; PORTEVIN, *Rev. métal.*, 1908, V, 391.

Si, melting at 862° C.) the first eutectic (8.3 per cent Si, freezing point 829° C.); the second eutectic of Cu_3Si + Si, with about 18 per cent Si, freezes at 810° C. Photomicrographs have been published by Arnold and Jefferson[1] and Albro.[2]

Copper-silicon alloys have been prepared in various ways.[3] Electrothermic methods have probably replaced the earlier modes of operating; and in these the electric fusion of a mixture of Cu, sand, and C in a resistance furnace has given place to the simple fusion of Si and Cu, since metallic Si is produced on a large scale and is sold at a reasonable price. The Cowles Electric Smelting and Aluminum Co., Lockport, N. Y., produces pure silicon-copper with 20 to 30 per cent Si, sold in ingots weighing about 14 lb.; details of the method of working have not been made public.

Copper-silicon alloys are brittle, and the more so the higher the Si content. The 20 to 30 per cent alloy is easily broken into glassy splinters by a tap with a

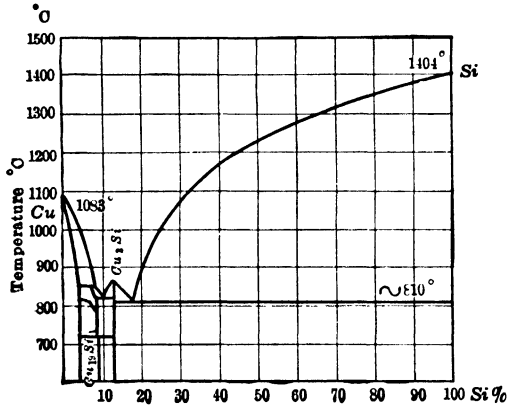

FIG. 20.—Alloy-series Cu-Si.

hammer; a fresh surface is silvery and assumes a reddish tint when exposed to the air.

According to Hampe[4] an addition of Si to Cu increases the hardness and at the same time assists in the production of sound castings; 3.472 per cent Si does not reduce the tensile strength and malleability of copper; 6 per cent makes it brittle; Cu with 8 per cent Si can be pulverized; with 11.7 per cent Si it is as brittle as glass. Rudolfi[5] states that Cu with 5 per cent Si is readily drawn into wire. According to Davis[6] the addition of 0.1 per cent Si to melted Cu increases the fluidity and gives castings that are clean and free from blowholes,

[1] *Eng. Mining J.*, 1896, LXI, 353.

[2] *Electrochem. Met. Ind.*, 1905, III, 461.

[3] MABERRY, *Am. Assoc. Adv. Sc.*, 1886, XXXIV, 136; HUNT, *Trans. A. I. M. E.*, 1885–86, XIV, 492; STEINHARDT, *Eng. Mining J.*, 1899, LXVII, 710; KROUPA, *Oesterr. Z. Berg. Hüttenw.*, 1903, LI, 285.

[4] *Chem. Z.*, 1892, XVI, 726; *Berg. Hüttenm. Z.*, 1892, LI, 321.

[5] *Loc. cit.*

[6] *Aluminum World*, 1896, III, 241.

which is due probably[1] to the reduction of Cu_2O. The cast alloy 97 Cu and 3 Si has a tensile strength of 55,000 lb. per square inch and from 50 to 60 per cent ductility; the cast alloy 95 Cu and 5 Si has 75,000 lb. tensile strength and 80 per cent ductility; over 5 per cent Si makes Cu brittle. An analysis of Si-Cu spring wire[2] gave Cu 97.59, Si 2.31, Fe 0.10.

26. Brass (Cu-Zn) in General.—The constitution of brass has been a subject of study since the days of Storer.[3] The leading freezing-point curves are those of Roberts-Austen,[4] Shepherd,[5] Sackur,[6] Tafel,[7] Carpenter and Edwards,[8] and Imai.[9] The curves of Shepherd and Tafel resemble one another. Shepherd holds that there are no chemical compounds; Tafel that the compound Cu_2Zn_3

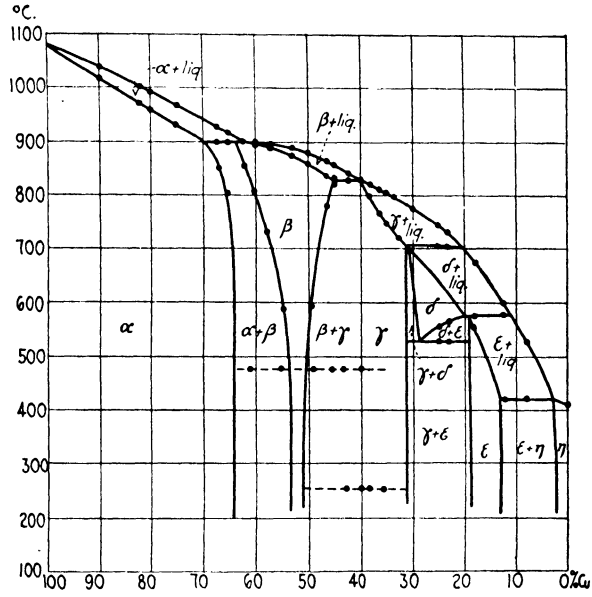

FIG. 21. Alloy-series Cu-Zn, brass.

(Cu 39.33, Zn 60.67, melting point, 830° C.) is established and that possibly there is a second compound Cu Zn (Cu 49.3, Zn 50.7).[10] Carpenter and Edwards have added to the curves of Shepherd and Tafel a transformation point at 470° C., below which the constituent β splits into $\alpha + \gamma$. The research of Imai,

[1] VICKERS, *Foundry*, 1908, XXXII, 1.
[2] *Brass World*, 1905, I, 413.
[3] *Mem. Am. Acad.*, 1860, VIII, 27.
[4] *Fourth Report Alloys Research Comm.*, 1897, p. 31.
[5] *J. Phys. Chem.*, 1904, VIII, 421; *Metallurgie*, 1904, I, 462.
[6] *Ber. deutsch. chem. Ges.*, 1905, XXXVIII, 2186.
[7] *Metallurgie*, 1908, V, 349, 375, 413 (including bibliography pp. 343, 349).
[8] *J. Inst. Metals*, 1911, V, 127, 1912, VIII, 51, 59.
[9] Science Rept., Tôhoku Imp. Univ., XI, 5, 1922.
[10] GUERTLER, *Z. anorg. Chem.*, 1906, LI, 429; HUDSON, *J. Soc. Chem. Ind.*, 1906, XXV, 503; BENGOUGH and HUDSON, *op. cit.*, 1908, XXVII, 43, 654.

whose diagram is shown in Fig. 21, employed the electric resistance method and X-ray analysis. He finds that the transformation point at 480° is the beginning of a progressive change of non-allotropic nature extending to a low temperature. It resembles the A_2 transformation in iron. The characteristics of the constituents of brass are assembled in Table XI.

TABLE XI.—CHARACTERISTICS OF COMPONENTS OF BRASS
(Shepherd)

Component[a]	Color	Color of fracture
α	Clear yellow to copper-red....	
$\alpha+\beta$	Red changing to full yellow...	Yellow.
$\beta+\alpha$	Reddish-yellow with a yellowish cast.	Yellowish-red.
$\alpha+\gamma$	Light bluish-gray	
β	Reddish-yellow.....	Yellowish-red.
$\beta+\gamma$	Reddish-yellow.....	Yellowish-red.
$\gamma+\beta$	Yellowish-red.....	Silvery with pinkish tinge.
γ	Silvery.....	Silvery, very brilliant.
$\gamma+\epsilon+\delta$	Silvery-gray to bluish-gray....	Silvery-gray, becoming duller.
ϵ	Bluish-gray.....	Bluish-gray.
$\epsilon+\eta$	Bluish-gray, becoming lighter..	Zinc-color.
η	Zinc-color.....	Zinc-color.

[a] Constituents α and β are malleable and ductile; γ, δ, ϵ, and η are increasingly brittle.

Alloys consisting of the solid solution α, which has a range of from 100 to 64 per cent Cu, can show no variety of structure. Figures 22 and 23 are photomicrographs of common brass, 66.6 per cent Cu, cast and annealed. The

FIG. 22.—Cast brass. × 100.

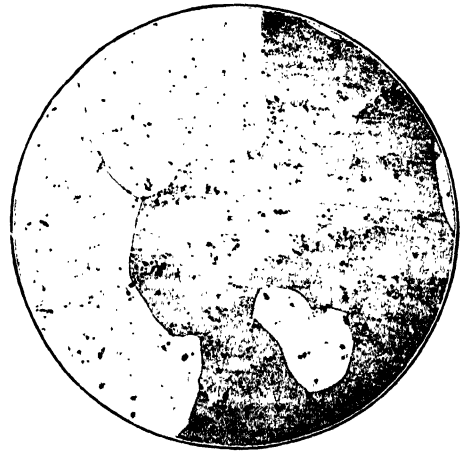

FIG. 23.—Annealed brass. × 100.

dendritic structure of the α crystals is due to the formation of copper-rich centers surrounded by zinc-rich borders, and to the attack on the borders by etching. The annealed specimen, in which equilibrium has been established between Cu and Zn, shows large polyhedral forms. The dark specks indicate the presence of a small amount of lead.

Alloys consisting of α crystals are malleable and ductile. Alloys with a composition lying between 64 and 54 per cent Cu may be brittle if cooled slowly to below 470° C., because of the transformation mentioned above; if chilled above 470° the transformation is prevented and they will be tough.

Murray[1] furnishes photomicrographs of the crystal forms $\alpha - \eta$; and Charpy,[2] 48 illustrations of different industrial brasses. The leading mechanical properties[3] are shown in Fig. 24. The tensile strength is seen to grow with increase of zinc until it reaches a maximum with about 56 per cent Cu (conglomerate α and β, chilled above 470° C.), and then to fall quickly (appearance of γ constituent); the elongation reaches its maximum earlier at about 70 per cent Cu (limiting concentration of α); the compressive strength attains the largest figure with 50 per cent Cu. The total shrinkage[4] shows the largest maximum

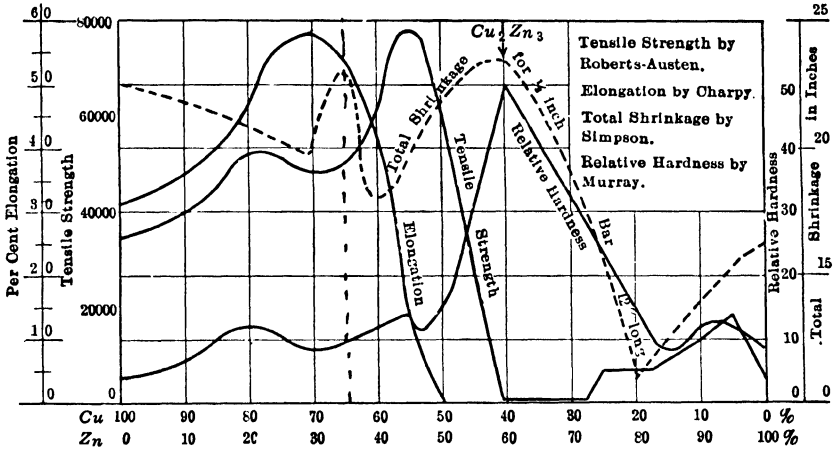

FIG. 24.—Mechanical properties of brass at ordinary temperature.

at 40 per cent Cu; the same is tne case with the hardness; and these two phenomena coincide with Tafel's chemical compound, Cu_2Zn_3.

A table of the mechanical properties of a series of analyzed brasses, cast and annealed, was presented by Guillet and Revillon[5] at the London International Congress of 1909.

At elevated temperature the mechanical properties show other values than those given in Fig. 24 for ordinary temperature.[6]

The mechanical changes which two brasses, $^{90}/_{10}$ and $^{67}/_{33}$, with α and $\alpha + \beta$ as components, undergo with increasing temperatures are shown in Figs. 25 and

[1] *J. Inst. Metals*, 1909, II, 1.

[2] "Contributions à l'étude des alliages," Paris, 1901, pp. 1–62.

[3] *J. Phys. Chem.*, 1913, XVII, 1; *J. Inst. Metals*, 1913, IX, 216; see also Bancroft, Lohr and Wilder, VIII, *Internat. Congress Appl. Chem.*, 1912, II, 8.

[4] TURNER and MURRAY, *J. Inst. Metals*, 1909, II, 98; WÜST, *Metallurgie*, 1909, VI, 709; *Iron Age*, 1910, LXXXV, 790; CHAMBERLAIN, *J. Inst. Metals*, 1913, X, 193.

[5] *Rev. métal.*, 1909, VI, 1251.

[6] BENGOUGH and HUDSON, *J. Inst. Metals*, 1910, IV, 92; JOHNSON, *Met. Chem. Eng.*, 1911, IX, 399; BENGOUGH, *J. Inst. Metals*, 1912, VII, 123; HUNTINGTON, *op. cit.*, 1912, VIII, 126; GUILLET, "Wire-drawing," *Rev. métal.*, 1913, X, 769.

26 by Grard.[1] Annealed brass has been hardened by mechanical treatment and then tested at temperatures ranging from zero to 900° C. The curves in Fig. 25 show for 90/10 brass that decided changes in the three mechanical properties given take place between 300 and 400° C., and that the same is the case with 67/33 brass (Fig. 26) between 200 and 300° C. Additional data are furnished

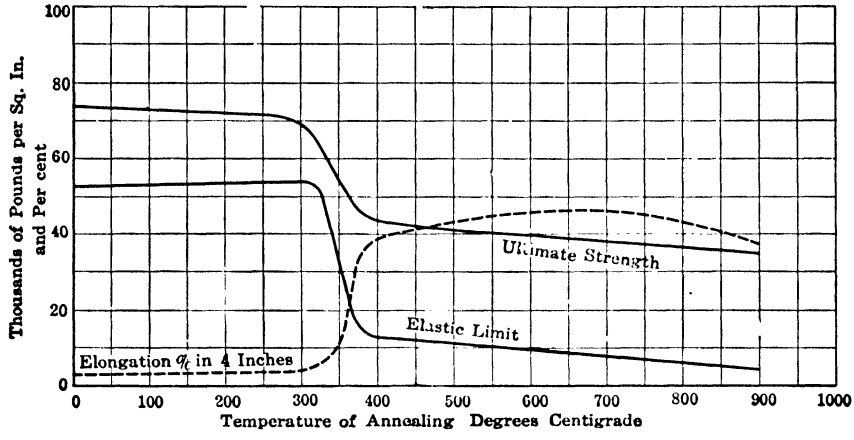

FIG. 25.—Mechanical properties of 90/10 brass at varying temperatures.

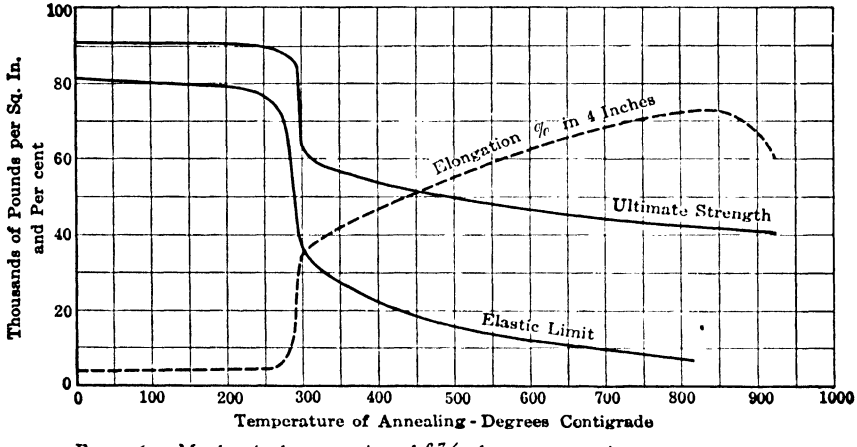

FIG. 26.—Mechanical properties of 67/33 brass at varying temperatures.

by Guillet.[2] The effects of annealing upon the structure have been studied by Portevin[3] and Robin.[4] When heated *in vacuo*.[5] the Zn is volatilized at a low temperature.

[1] *Rev. métal.*, 1909, VI, 1069; *Metallurgie*, 1910, VII, 651; *Proc. Internat. Congress Testing Materials*, New York, 1912.

[2] *Rev. métal.*, 1913, X, 671.

[3] *Op. cit.*, 1913, X, 677.

[4] *Op. cit.*, 1913, X, 764.

[5] TURNER, *J. Inst. Metals*, 1912, VII, 105.

Mathewson and Phillips[1] show that α brass after cold rolling followed by annealing at 200° C. has a slightly greater hardness and tensile strength and less ductility than in the unannealed condition. They also showed that the greater the deformation in rolling the lower the temperature at which recrystallization set in. The lowest temperature at which this was visible with 40 per cent reduction during rolling was at 275 to 300° C.

Their curves showing the effects of various temperatures in annealing rolled bars are given in Fig. 27.

The electric conductivity of brass has been studied by Pushin and Rjaschsky.[2] Northrup[3] states that brass with Cu 63 per cent, Zn 34.6, Pb 2.4 and

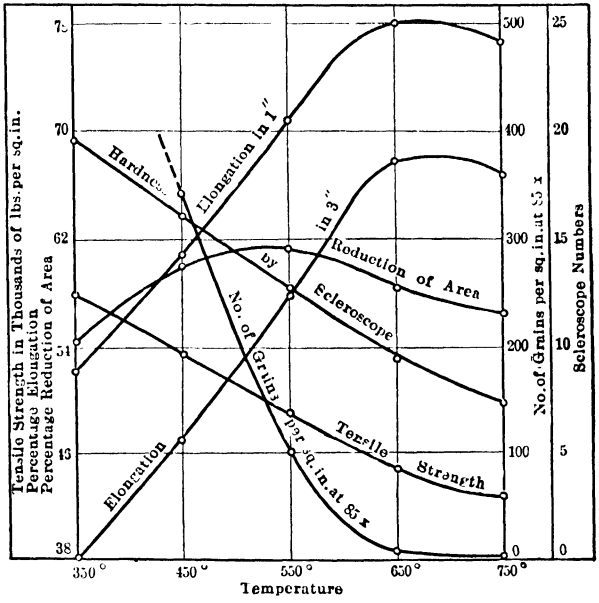

FIG. 27.—Effect of temperature in annealing rolled brass.

traces of Sn and Fe gave a resistivity of 6.957 microhms at 20° C. with a steady increase to 15.5 at 850° C. and 44.6 at the point of complete melting.

Upon heating in air, alloys with over 63 per cent Cu show iridescent colors. The behavior, with acids, of alloys with < 50 per cent Zn is similar to that of Cu; alloys with > 50 per cent Zn are readily dissolved in acids which attack, Zn but not Cu. The product of electrolytic corrosion[4] of brasses with > 50 per cent Zn is practically Zn; with < 50 per cent Zn it has the same composition as the alloy; or α, $\alpha + \beta$, and β brasses yield products of the same composition as the brasses; γ crystals diminish the corrosion; $\gamma + \epsilon$, ϵ and η brasses yield as product pure Zn. The fact that most industrial brasses lie within the range of

[1] *Trans. A. I. M. E.*, 1916, LIV, 608.

[2] *Z. anorg. Chem.*, 1913, LXXXII, 50; *J. Inst. Metals*, 1913, X, 420.

[3] *Eng. Mining J.*, 1913, XCVIII, 107.

[4] LINCOLN, KLEIN and HOWE, *J. Phys. Chem.*, 1907, XI, 501; BRÜHL, *J. Inst. Metals*, 1911, VI, 279.

α or the conglomerate $\alpha + \beta$, makes them resistant to corrosion.[1] Brasses are likely to occlude gases,[2] such as CO_2, CO, and H.[3] In the manufacture[4] of brass the purity of the metals,[5] the apparatus used, and the temperature and time given to fusion and pouring all have an influence upon the physical properties of the alloy. The O in Cu may have a harmful influence[6] in that it oxidizes Zn and causes infusible salamanders to form in the crucible. The presence of 0.01 per cent O (0.09 per cent Cu_2O) is harmless; good sheet brass has been rolled with copper containing 0.55 per cent O (4.91 per cent Cu_2O), although the figure is excessive. According to Sperry, as little as 0.02 per cent Sb[7] or 0.02 per cent Bi,[8] or 0.06 per cent Te[9] makes common brass (60 Cu, 40 Zn) brittle so that it cannot be rolled without showing cracks; 0.8 to 0.9 per cent Pb[10] causes no harm, but, with 1 per cent Pb, trouble arises. An addition of 1.5 to 2 per cent Pb[11] makes (screw or clock) brass sufficiently brittle to cut well with short chips. Similarly, As, to the extent of 0.02 per cent,[12] begins to affect the malleability, but Smalley[13] shows that up to 0.09 per cent it improves the mechanical properties of cast brass. More than 0.09 per cent is injurious. He also shows[14] that As, even in small quantity, injures hot-worked brass, but when below 0.10 per cent it is beneficial to cold-worked brass. One per cent Cd[15] appears to have no harmful influence except that it hardens the alloy. S[16] makes brass pasty and is thus a cause of dirty castings; such pasty brass showed 0.69 per cent S. Brass with 0.03 per cent S rolls as well as common brass; it is not made red-short by S as is the case with Cu.

The effects of various impurities upon the constitution of brasses, especially upon the structure of the β constituent, have been investigated by Carpenter.[17]

Manufacture of Brass.—Brass is produced[18] by melting together Cu and Zn in a crucible furnace,[19] which is usually fired with anthracite, coal, or coke,

[1] DIEGEL, *Stahl u. Eisen*, 1899, XIX, 170, 224; JONES, *Metal Ind.*, 1905, III, 171; SEXTON, *Eng. Mag.*, 1905, XXX, 211; DESCH and WHYTE, *J. Inst. Metals*, 1913, X, 314.

[2] GUILLEMIN and DELACHANAL, *Rev. métal.*, 1911, VIII, 1.

[3] LEWIS, *Proc. Chem. Soc.*, 1912, XXVIII, 290; *J. Inst. Metals*, 1913, IX, 217.

[4] Brass foundries: *Foundry*, 1902, XX, 142; 1903, XXIII, 169; 1906, XXVIII, 131; 1907, XXXI, 176, 285; *Metal Ind.*, 1908, VI, 341; *Iron Age*, 1912, LXXXIX, 1257; *Metal Ind.*, 1913, XI, 155.

[5] CARPENTER, *J. Inst. Metals*, 1912, VIII, 59.

[6] SPERRY, *Trans. A. I. M. E.*, 1900, XXX, 937; JOLIBOIS and THOMAS, *Rev. métal.*, 1913, X, 1264.

[7] *Trans. A. I. M. E.*, 1898, XXVIII, 176; *Brass World*, 1907, III, 297.

[8] SPERRY, *Trans. A. I. M. E.*, 1898, XXVIII, 427; CARPENTER, *J. Inst. Metals*, 1912, VIII, 60.

[9] *Trans. A. I. M. E.*, 1903, XXXIII, 682.

[10] GUILLET, *Rev. métal.*, 1906, III, 273; JOHNSON, *J. Inst. Metals*, 1912, VII, 201; CARPENTER, *op. cit.*, 1912, VIII, 63.

[11] SPERRY, *Trans. A. I. M. E.*, 1897, XXVII, 485.

[12] SPERRY, *Brass World*, 1906, II, 163.

[13] Bureau Standards, *Tech. Paper* No. 82, 1917.

[14] *Met. Chem. Eng.*, 1917, XVI, 606.

[15] *Brass World*, 1907, III, 1211.

[16] SPERRY, *op. cit.*, 1906, II, 307.

[17] *J. Inst. Metals*, 1912, VIII, 59.

[18] *Stahl u. Eisen*, 1913, XXXIII, 522.

[19] HORNER, *Foundry*, 1913, XLI, 113, 119.

sometimes with liquid, but rarely with gaseous fuel.[1] Electric furnaces are being advocated and are replacing crucible furnaces in some plants.[2] Oil- or gas-fired reverberatory furnaces are employed for melting ingot brass or bundled scrap and borings[3] after the iron has been removed by a magnet or the raw material first purified by washing.[4] Experiments have been made to produce brass from ZnS and Cu.[5]

In a crucible furnace the warmed Cu is charged first, melted under a 1-in. charcoal cover and kept just above its freezing point. Then the necessary Zn, previously warmed, is added in several portions in order to prevent chilling of charge (the heating-up of which would cause much loss in Zn); the whole thoroughly stirred; brought quickly to the right temperature (100 to 200° C. above the melting point; overheating causes oxidation, Zn begins to burn); skimmed or not; and poured into a suitable mold (sand, cast-iron, or bronze) to furnish an ingot to be sold or a plate to be rolled. In either case the alloy is chilled by spraying with water. Brass shrinks about $\frac{3}{16}$ in. per foot, hence the cores are made soft.[6] Fluxes,[7] such as borax, are little used; sometimes salt is[8] added as a wash, although it assists the volatilization of Zn, and a deoxidizer[9] such as Mg. An ordinary charge weighs from 50 to 200 lb.; 100 lb. is melted in about two hours; the loss in Zn may reach 6 per cent[10] and has to be taken into account in making up the mixtures;[11] 1 lb. coke will melt about 2 lb. alloy; one man will operate four to six furnaces. The manufacture by electro-deposition is confined to plating.[12]

Industrial brasses may be classed as regular and special; the former represent the binary alloys, the latter the Cu-Zn alloy with additional metals to furnish special properties.

27. Regular Brass.—There is a great variety in the regular brasses to meet the numerous requirements of the arts. The leading brasses are given in Table XII. The usual range of composition lies between 90 and 35 per cent Cu; the most important alloys are those containing from 70 to 55 per cent Cu. Alloys with more than 64 per cent Cu are composed solely of α solution, while those between 64 and 55 per cent Cu are made up of α and β when quenched

[1] KROM, "Development of Melting Furnaces," *Metal Ind.*, 1909, VII, 287, 324, 358, 404, 436; 1910, VIII, 80.

[2] CLAMER and HERING, *Met. Chem. Eng.*, 1912, X, 702; *Foundry*, 1912, XL, 483; *Brass World*, 1912, VIII, 35; *Metal Ind.*, 1921, XIX, 149, 240, 283, 321, 358; *Metal Ind.*, 1922, XX, 16, 20, 340; *Trans. Am. Electrochem. Soc.*, 1921; HANSEN, *Met. Chem. Eng.*, 1912, X, 703.

[3] *Brass World*, 1910, VI, 345; *op. cit.*, 1912, VIII, 421.

[4] WITTICH, *Eng. Mining J.*, 1912, XCV, 853.

[5] BENSEL, *Metallurgie*, 1912, IX, 523.

[6] CHAMBERLAIN, "Volume Changes," *J. Inst. Metals*, 1913, X, 193.

[7] KROM, *Metal Ind.*, 1910, VIII, 203.

[8] SPERRY, *Brass World*, 1912, VIII, 307.

[9] WEST, "O in Cu and Brass," *J. Inst. Metals*, 1913, X, 371.

[10] BASSETT, *J. Ind. Eng. Chem.*, 1912, IV, 164.

[11] SPERRY, "Mixtures," *Brass World*, 1912, VIII, 41, 83, 121, 167, 204, 239, 285, 317; BURKEY, "Treatment of Brass Scrap," *Eng. Mining J.*, 1913, XCVI, 486.

[12] THOMPSON, *Met. Chem. Eng.*, 1912, X, 458.

above 470°; of $\alpha + \gamma$ when cooled very slowly; α alloys are rolled or drawn[1] cold; $\alpha - \beta$ ($\alpha - \gamma$) alloys have to be rolled hot.

A study of the properties of brass with 60 per cent Cu has been made by Williams and Homerberg.[2] They find wide variations in mechanical properties with different heat treatment.

In Table XII the brasses are divided into four classes: class I, so-called "high brass" is suited especially for cold-rolling; class II, the standard common metal, can be rolled either cold or hot; class III, so-called "low brass," can be rolled hot only. Annealing[3] at 420° C. begins to cause rearrangement of distorted crystals; heating to 600 to 700° C. removes all internal strains. Figure 28 gives the structure of rolled common brass that worked well, Fig. 29 that of one which failed due to season cracking; the former has a proper grain size, the latter (badly annealed) is made up of large crystals and is weak. Other

FIG. 28.—Brass which worked satisfactorily. × 100.

FIG. 29.—Rolled brass which failed from season-cracking. × 100.

photomicrographs are given by Lewis,[4] Bengough and Hudson,[5] Carpenter and Edwards,[6] Bengough.[7] Class IV, or "white brass," includes the alloys that cannot be rolled. The so-called "cast brass" includes the range of composition occupied by classes II, III, and IV. It usually undergoes no mechanical treatment, hence it need not be so pure as the alloy that is to be rolled or drawn; in

[1] GRARD, *Rev. métal.*, 1909, VI, 1069 (London Congress); *Metallurgie*, 1910, VII, 651; *Proc. Inst. Assoc. Testing Materials*, New York, 1912, II, 15; DIEGEL, *Verhandel. Verein. Beförd. Gewerbefl.*, 1906, LXXXV, 177; *Metallurgie*, 1906, III, 568; KROM, *Metal Ind.*, 1910, VIII, 8, 111, 157, 342, 375, 459, 499; 1911, IX, 27, 123, 127; 1912, X, 20, 118, 331; 1913, XI, 18, 337; STILSON, *Eng. Mag.*, 1913, XLV, 239.

[2] *A. I. M. E. New York Meeting*, Feb., 1924.

[3] MOORE, "Annealing Furnaces," *Metal Ind.*, 1910, VIII, 45.

[4] *Engineering*, 1903, LXXVI, 753; *Metal Ind.*, 1903, I, 33; *J. Soc. Chem. Ind.*, 1903, XXII, 12.

[5] *J. Inst. Metals*, 1909, I, 89, 1910, IV, 92; *J. Soc. Chem. Ind.*, 1908, XXVII, 1 (Muntz Metal).

[6] *J. Inst. Met.*, 1911, V, 127; 1912, VII, 70; 1912, VIII, 51.

[7] *Op. cit.*, 1912, VII, 123.

TABLE XII.—INDUSTRIAL BRASSES (REGULAR)

Class	Industrial name	Cu, per cent	Zn, per cent	Color	Fracture	Malleability and ductility	U. S. Government specifications, July 1 1910[a]
I	Red brass	90	10	Yellow-red.	Vesicular.	Malleable and ductile when cold; the properties decrease with increase of zinc.	
	Tomback	85	15	Red-yellow.	Earthy.		Brazing metal: Cu 84–86, Zn 14–16, Fe < 0.06, Pb < 0.30.
	Fine casting brass and brazing metal	80	20	Yellow.	Earthy.		
	Pinchbeck, sheet brass	75	25	Pale yellow.	Earthy.		Sheet brass: Cu 60–70, Zn 30–40, Pb < 0.50.
	Fine yellow brass	70	30	Pale yellow.	Earthy.		Admiralty metal: Cu 70, Zn 29, Sn 1.0, Pb < 0.075, Fe < 0.06.
II	Standard yellow (common, low) brass[b]	66.6	33.4	Deep yellow.	Fibrous to coarse.	Malleable and ductile cold or hot, usually only rolled.	Cu 64–68, Zn 32–34, Fe < 2.0, Pb < 3.0.
III	Common yellow brass	63	37	Deep yellow.	Fibrous to coarse.	Malleable only hot (not ductile).	Brass rods: Cu 60–63, Zn 37–40, Pb < 3.
	Muntz metal[c]	60	40	Golden-yellow.	Fibrous to coarse.	Same.	Cast naval brass: Cu 59–63, Zn 35.5–40.5, Sn 0.5–1.5.
	Extrusion metal[d]	55	45	Golden-yellow.	Fibrous to coarse.	Same.	Cu 59–62, Zn 39–41, Pb < 0.6.
IV	White button brass	45	55	Pinkish-gray.	Coarsely crystalline.	Brittle.	
	White brass	35	65	Silver-gray.	Conchoidal.	Brittle.	
	White brass	10	90	Bluish-white.	Finely granular	Brittle.	

(a) *Brass World*, 1910, VI, 397.

(b) BOLTON, "Brass Wire," *Iron Age*, 1906, LXXVIII, 1676.

(c) HAMLET, "Decay and Corrosion of Muntz Metal," *London Mining J.*, 1907, LXXXI, 485, 523; JOHNSON, "Effect of Sb, As and Bi upon Muntz Metal," *Engineering*, 1913 XCV, 2 and 3.

(d) SPERRY, "Extrusion or Squirting Process," *Brass World*, 1908, IV, 3.

fact, the impurities present or purposely added make it run more smoothly, fill the mold more evenly, and permit machining more readily.

28. Special Brass.—The leading special brasses[1] are aluminum, iron-, manganese-, tin-, and nickel-brass.

1. *Aluminum-brass* (*Hercules metal*) does not contain over 4 per cent Al, as the presence of a larger amount renders the alloy difficult to work. The usual range of composition is Cu 67 to 71, Zn 31.75 to 25.50, Al 1.25 to 2.50 per cent.

Carpenter and Edwards[2] have investigated that part of the ternary system Cu-Zn-Al which is richest in Cu. They find that there is no ternary eutectic, that the larger part of the liquidus surface consists of two areas corresponding to α and β solutions, that the α alloys undergo no transformation on cooling, but that the β alloys are resolved into $\alpha + \gamma$, and that a thermal change takes place

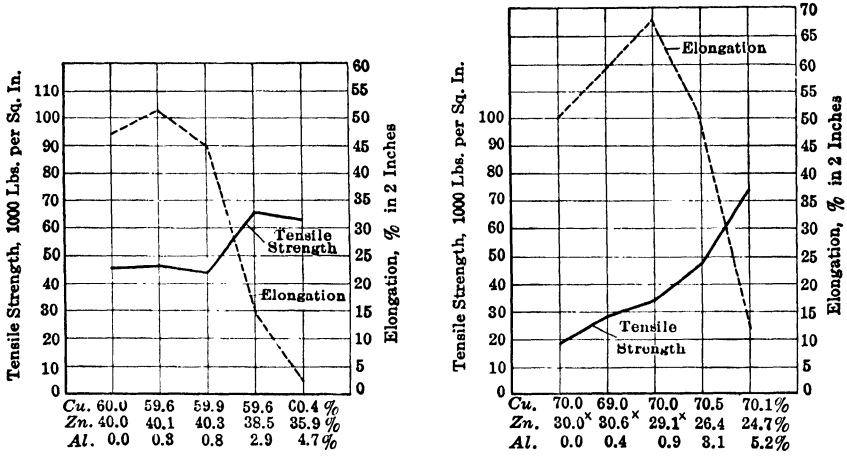

FIGS. 30–31.—Mechanical properties of $^{60}/_{40}$ and $^{70}/_{30}$ aluminum brass.

at 700° C. They conclude that, starting from the Cu-Al side toward the Zn side, the mechanical properties will change not suddenly but uniformly and progressively.

Guillet,[3] who studied this series of alloys microscopically, concludes that 1 lb. Al can replace 3.5 lb. Zn; an alloy with 38 per cent Zn and 2 per cent Al, *e.g.* has the same structure as one with 45 per cent Zn. The alloys are fine-grained, and give good castings which should be cooled slowly. They can be worked at lower temperatures than the corresponding Zn-Cu alloys, being more malleable. The mechanical properties of a $^{60}/_{40}$ and a $^{70}/_{30}$ aluminum brass annealed are shown in Figs. 30 and 31. Their resistance to corrosion is discussed by Rowland.[4] The addition as a deoxidizer of 0.05 per cent Al to ordinary brass that is to be

* These figures have been changed slightly from the originals to bring up the totals to 100 per cent.

[1] ROSENHAIN, *J. Inst. Metals*, 1912, VII, 191.

[2] *Intern. Z. Metallog.*, 1912, II, 209; *Rev. métal.*, 1913, X, 429; *J. Inst. Metals*, 1912, VIII, 322; comment by Guillet, *Rev. métal.*, 1913, X, 463.

[3] *Rev. métal.*, 1905, II, 111, 1906; III, 254.

[4] *J. Phys. Chem.*, 1908, XII, 180.

cast in sand is helpful in obtaining clean castings; with castings to be made in metal molds the addition of Al is to be avoided.[1]

2. *Iron-brass.*—The addition of up to 3 per cent Fe to brass strengthens and hardens the alloy, increases the malleability when hot, and the resistance to corrosion. The constitution of these alloys has not been studied; the effect of Fe upon the structure has been investigated by Carpenter.[2]

Sterro-metal, Aich metal and Delta Metal, Tobin Bronze, and Durana Metal are industrial names for this class of alloy.

"Sterro-metal"[3] has the following range of composition: Cu 60, Zn 38 to 38.5, Fe 2 to 1.5; it represents a $^{60}/_{40}$ brass in which part of the Zn has been replaced by Fe; it has a tensile strength of 50,000 to 70,000 lb. per square inch, with an elongation of from 11 to 39 per cent in 8 in.[4] Sometimes a small amount of Sn is added to improve its quality; such an alloy contains Cu 55 to 60, Zn 34 to 44, Fe 2 to 4, Sn 1 to 2, and has a tensile strength ranging from 43,000 to 82,000 lb. per square inch. An alloy, Cu 55.04, Zn 42.36, Fe 2.77, Sn 0.83 per cent, gave tensile strength, cast 40,320 lb., forged 76,160 lb., cold-drawn 40,320 lb.[5]

"Aich Metal" resembles sterro-metal. Hiorns[6] gives Cu 58 to 60, Zn 36 to 41, Fe 0.74 to 1.74, Sn 0 to 1.02 per cent as the range of composition.

"Delta Metal" contains usually Cu 55, Zn 41, Fe 3, Mn, etc., 1 per cent. Tetmayer's tests[7] gave tensile strength, cast 44,000 lb. per square inch and elongation 30 to 40 per cent in $7\frac{7}{8}$ in. These alloys are said to resist corrosion better than ordinary brass. In the manufacture, Fe is introduced by using iron-bearing Zn, rarely iron-bearing Cu.

Tobin Bronze.[8]—Two analyses gave Cu 59.00, Zn 38.40, Sn 2.16, Fe 0.11, Pb 0.31 and Cu 61.20, Zn 37.14, Sn 0.90, Fe 0.18, Pb 0.35; the tensile strength showed 78,500 lb.; the elongation 15 per cent in 2 in. and 40.5 per cent in 8 in. The original Tobin bronze[9] contained Cu 58.22, Zn 39.48, Sn 2.30; it showed a tensile strength cast of 66,000 lb., rolled 79,000 lb., and cold rolled 104,000 lb. per square inch.

"Durana Metal"[10] contains Cu 64 to 78 per cent, Zn 29.50, Fe 1.51, Al 1.70, Sn and Sb 2.20. The tensile strength is 82,000 lb.; elongation 14 per cent; and, elastic limit 70,000 lb.

3. *Manganese-brass.*[11]—In the trade these alloys often go by the name of *manganese-bronze*,[12] a name which ought to be reserved for Cu, Sn, Mn alloys.

[1] SPERRY, *Metal Ind.*, 1903, I, 35.

[2] *J. Inst. Metals*, 1912, VIII, 66.

[3] GUILLET, *Rev. métal.*, 1906, III, 264.

[4] THURSTON, "A Treatise on Brasses, Bronzes, etc.," 1900, p. 415.

[5] *Op. cit.*, p. 368.

[6] "Mixed Metals," Macmillan, New York, 1913, p. 159.

[7] *Schweiz. Gewerbeblatt*, June 8, 1889.

[8] GARRISON, *J. Franklin Inst.*, 1891, CXXXII, 55.

[9] THURSTON, *Trans. Am. Soc. Civ. Eng.*, 1881, XI, 1309.

[10] KNORRE, *Z. angew. Chem.*, 1894, 238.

[11] General: *Foundry*, 1905, XXVI, 116; Mixtures: *Metal Ind.*, 1909, VII, 173; 1910, X, 5; Casting: *Metal Ind.*, 1903, I, 131; 1910, VIII, 410; 1911, IX, 4, 73; *Brass World*, 1905, I, 153; 1910, VI, 79; *Foundry*, 1905, XXVI, 87; 1912, XL, 487; Tests: *Metal Ind.*, 1907, VII, 175; Wire: *Brass World*, 1905, I, 255; Specifications: *Metal Ind.*, 1909, VII, 1.

[12] CORSE and SKILLMANN, "History," *Met. Chem. Eng.*, 1914, XII, 113.

Mn appears to harden brass, to increase the tensile strength, and to diminish the elongation; 1 lb. Mn can take the place of 0.5 lb. Cu.[1] However, the yellowish alloy called Parson's manganese-bronze contains only from a trace to 0.02 per cent Mn as seen by the two following recent analyses:[2] cast metal, Cu 57.30, Zn 40.44, Sn 1.01, Fe 0.79, Pb none, Al 0.46, Mn trace; sheet metal, Cu 60.17, Zn 37.47, Sn 0.99, Fe 1.24, Pb trace, Al none, Mn 0.02. Its mechanical properties[3] cover the following range: tensile strength 81,500 to 90,500 lb. per square inch; elastic limit 39,300 to 44,750 lb.; elongation 40 to 26 per cent; and reduction of area 47.5 to 33.0 per cent. The effects of the pouring temperature upon the size of grain and thereby upon the mechanical properties have been studied by Gillett.[4] The alloy is used for propeller blades, parts of guns, carriages, automobiles, valve stems, shafting of motor boats, etc. The specifications of the U. S. Government Bureau of Steam Engineering, of July 1, 1910,[5] call for Cu 57 to 60, Zn 37 to 40, Sn 0.75, Fe $<$ 1.00, Al $<$ 0.50, Mn $<$ 0.30; those of the American Society for Testing Materials:[6] Cu 55 to 60, Zn 39 to 45, Fe = or $<$ 2, Sn not $>$ 2, Al not $>$ 2, Mn not $>$ 2 per cent, ultimate strength not $>$70,000 lb. per square inch, elongation in 2 in. not $<$ 20 per cent.

4. *Tin-brass.*—According to Johnson,[7] Sn is only slightly soluble in α, but readily so in β brass (cast); rolling and annealing help the solution in the α constituent of a 70/30 brass. Carpenter[8] found that 1 per cent Sn greatly favored the formation of the γ constituent. These alloys contain Cu 60 to 62, Zn 37.5 to 39, Sn 1 to 1.5 per cent. Guillet[9] found that 1 per cent Sn replaced about 1.5 per cent Zn, but the amount of Sn has to be kept below 4 per cent, as otherwise the alloy becomes brittle. The main advantage of an addition of Sn is an increased resistance to corrosion. In the manufacture of the alloy the Sn is introduced into the stream of Cu-Zn as it flows from the crucible. Capp[10] found that the data for elastic limit obtained by the usual methods of testing are unreliable for this class of alloys, as well as for brasses and bronzes in general. The effects of Mn, Si, Cr, Wo, and Va on brasses have been summarized and described by Escard,[11] those of Cr and Va by Carpenter.[12] As little as 0.04 per cent Va[13] reduces the electric conductivity, but increases the elastic limit, tensile strength, and ductility from 10 to 20 per cent. According to Gin,[14] the Ruebel alloy is

[1] GUILLET, *Rev. métal.*, 1906, III, 258.
[2] *Metal Ind.*, 1909, VII, 173.
[3] *Op. cit.*, p. 175.
[4] *Trans. Am. Inst. Metals*, 1912, VI, 207.
[5] *Brass World*, 1910, VI, 398.
[6] Yearbook, 1911, p. 135.
[7] *J. Inst. Metals*, 1912, VII, 201.
[8] *Op. cit.*, 1912, VIII, 65.
[9] *Rev. métal.*, 1906, III, 264.
[10] *J. Am. Soc. Mech. Eng.*, 1910, XXXII, 373; *Iron Age*, 1910, LXXXVI, 628; *J. Inst. Metals*, 1910, IV, 310.
[11] *Génie civil*, 1909, LV, 74, 85; *Oesterr. Z. Berg. Hüttenw.*, 1910, LVIII, 201, 215.
[12] *J. Inst. Metals*, 1912, VIII, 165.
[13] NORRIS, *J. Franklin Inst.*, 1911, CLXXI, 580.
[14] *Metall u. Erz*, 1913, X, 502.

prepared by melting together Cu 45 to 57 parts, Zn 40, and (Va, Cu, Al, Fe) 3 to 15. The commercial Cu-Va alloy contains 3 per cent Va, but is difficult to obtain free from Fe and Al.

5. *Nickel-brass.*—The mechanical properties of brass are improved by an addition of Ni;[1] it can replace 1.2 parts of Zn.

Guillet,[2] who has studied the effects of Ni upon brass, finds that small additions of Ni make brass easier to work cold, and that additions up to 10 per cent improve the mechanical properties.

29. Bronze[3] **(Cu and Sn). In General.**—The complicated constitution of bronzes has been studied by Stansfield,[4] Heycock and Neville,[5] Roberts-Austen,[6] Shepherd and Blough,[7] Giolitti and Tovante.[8] Following the freezing-point curve of Shepherd and Blough, shown in Fig. 32, bronzes may contain five

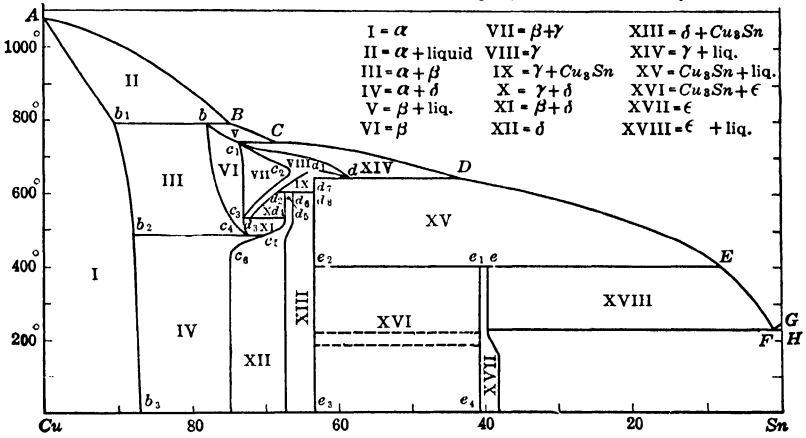

FIG. 32.—Alloy-series Cu-Sn, bronze.

solid solutions, α, β, γ, δ, ε, and the chemical compound Cu_3Sn; the compositions and colors are given in Table XIII.

TABLE XIII.—CONSTITUENTS OF BRONZE

Constituent	Nature and Composition	Color
α	Solid solution of Cu and Sn with from 0 to 13 per cent Sn	Reddish-yellow to yellow.
β	Solid solution of Cu and Sn with from 22 to 27 per cent Sn	Yellow.
γ	Solid solution of Cu and Sn with from 27 to 57 per cent Sn	White.
δ	Solid solution of Cu and Sn with from 24 to 33 per cent Sn	White.
ε	Solid solution of Cu and Sn with from 33 to 59 per cent Sn	White.
Cu_3Sn	Chemical compound, 61.5 per cent Cu, 37.5 per cent Sn	White.

[1] GUILLET, *Compt. rend.*, 1912, CLV, 1512; *J. Inst. Metals*, 1913, IX, 213.

[2] *Rev. métal.*, 1913, X, 1130.

[3] THURSTON, *op. cit.*

[4] *Third Report Alloys Research Comm.*, 1895, 269.

[5] *Philos. Trans. A.*, 1897, CLXXXIX, 42.

[6] *Fourth Report Alloys Research Comm.*, 1897, 67; Suppl. by Campbell *Fifth Report*, 1901, 1211.

[7] *J. Phys. Chem.*, 1906, X, 630.

[8] *Gazz. chim. ital.*, 1908, XXXVIII, 2, 209; *Rev. métal.*, 1909, VI, 476.

The liquidus is shown in A,B,C,D,E,F,G, the solidus in $A,b_1b,c_1,d,d_7,e_2,e_1,e,F,H$. The six components and their combinations give bronzes characteristic structures, represented by fields I to XVIII. Field I is the region of pure α crystals; in field II, α crystals are stable in contact with the mother metal; in III crystals α and β form a conglomerate; at 486° C. β crystals break down into α and δ, and furnish the stable forms α and δ for field IV; in field V, β crystals are stable in contact with mother metal; field VI is the region for pure β crystals, as is VII for a conglomerate of $\beta + \gamma$, and VIII the region for pure γ; the solid solution δ in field XII (once considered to be Cu_4Sn), formed by a transformation in the solid of $\gamma + Cu_3Sn$ in field IX, is stable below 600° C., and so on. The meaning of the two horizontal lines at 218 and 182° C. in field XVI has not yet been interpreted.

Two photomicrographs of Heycock and Neville, Figs. 33 to 34, show light α and dark β crystals in an alloy with 15.6 per cent Sn. The alloy repre-

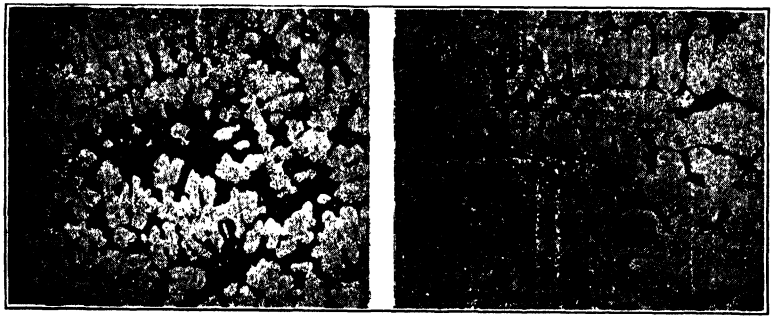

FIG. 33.—Alloy chilled at 777° C. FIG. 34.—Alloy cooled slowly to 546° C. and then chilled.

FIGS. 33–34.—Cast bronze with 15.6 per cent Sn; α-crystals light, β-crystals dark.

sented by Fig. 33 was chilled at 777° C.; that by Fig. 34 slowly cooled to 546° C. and then chilled.

The range of composition of the bronzes that are of importance in engineering is much smaller than that of brasses; 80 per cent represents the lowest figure for Cu, or 70 per cent if bell metal be included. The transformations that are possible in the region 100 to 70 per cent Cu show that the physical properties of these alloys must be considerably affected by heat treatment. The ultimate strength and elongation[1] of bronzes, both cast and annealed, are shown in Figs. 35 and 36. In Fig. 35 the tensile strength is seen to increase with an addition of Sn until the maximum is reached with about 80 per cent Cu; the strength of an alloy with 70 per cent Cu is very small, falling to about 16,000 lb. per square inch. Heat treatment[2] does not affect alloys with from 100 to 86 per cent Cu, as these are homogeneous, consisting exclusively of α crystals. With alloys containing from 86 to 76 per cent Cu, the case is

[1] SHEPHERD and UPTON, *J. Phys. Chem.*, 1905, IX, 441; *Metallurgie*, 1906, III, 29; *Rev. métal.*, 1906, III, 8.

[2] GRENET, *Rev. métal.*, 1911, VIII, 108; *Metallurgie*, 1911, VIII, 543.

different. Annealed at 400° C. (curve *D*) they consist of $\alpha + \delta$ crystals (Fig. 32); while holding at 540° C. and then chilling in water (curve *B*) has changed $\alpha + \delta$ into $\alpha + \beta$. The $^{78}/_{22}$ alloy with $\alpha + \delta$ structure shows a tensile strength of 45,000 lb. per square inch; the same with $\alpha + \beta$ structure, one of 67,000 lb. The curve *C* for cast bronze with from 86 to 76 per cent Cu lies between curves *B* and *D*, as the cooling was so quick as to allow only part of $\alpha + \delta$ to change into $\alpha + \beta$; hence such a cast bronze can contain all three constituents α, β, and δ An alloy with 70 per cent Cu may contain α, β, γ, and δ crystals, depending upon the rate of cooling. The constituent δ makes the alloy brittle; whenever it forms more than 70 per cent of the alloy the strength decreases rapidly.

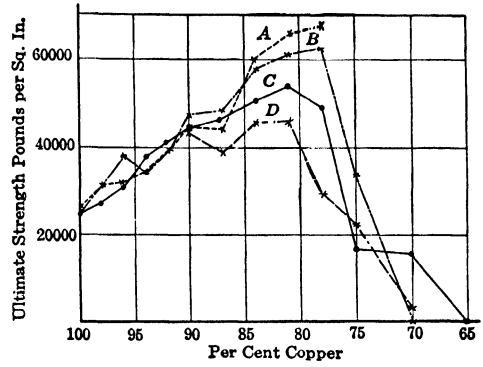

A. Heated to low red, water-quenched.
B. Held one week at 540°C. water-quenched
C. Tested as cast.
D. Held one week at 400°C. furnace-cooled.

FIG. 35.—Tensile strength of cast bronze.

In Fig. 36 the differences in ductility between cast and annealed bronzes are clearly shown. In cast bronzes with from 100 to 80 per cent Cu the ductility, excepting a slight rise, decreases with an increase of Sn; heating such bronzes to 540° C. and then quenching in water increases the ductility by 5 per cent. The greatest ductility is reached with a bronze of 90 to 88 per cent Cu, a composition which lies very close to the maximum of Sn in α crystals.

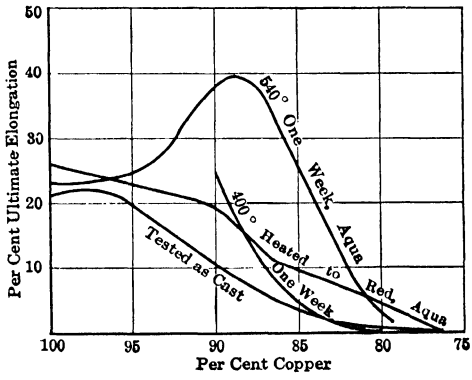

FIG. 36.—Ductility of cast bronze. Aqua = water-quenched.

The changes in the leading mechanical properties of cast bronzes, of the compositions $^{95}/_{5}$, $^{91}/_{9}$ and $^{87}/_{13}$, when tested between zero and 800° C., are shown in Figs. 37, 38 and 39.[1] The alloys $^{95}/_{5}$ and $^{91}/_{9}$ have α as sole constituent, but show a difference in behavior when pulled in the testing machine. In the $^{87}/_{13}$ alloy, consisting when annealed of $\alpha + \delta$, the change into $\alpha + \beta$ near 500° C. is clearly marked by the mechanical tests.[2] The relation between mechanical properties and heat treatment of drawn bronzes has been studied by

[1] GUILLET, L., "Trempe, Reçuit, Revenu," Dunod-Pinat, Paris, 1909, p. 572.
[2] PORTEVIN, *Rev. métal.*, 1903, x, 677; ROBIN, *op. cit.*, 1913, x, 764.

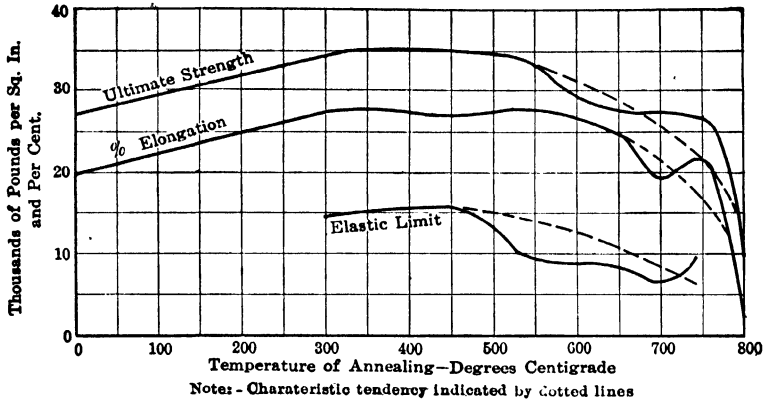

FIG. 37.—Mechanical changes of $^{95}/_{5}$ bronze at varying temperatures.

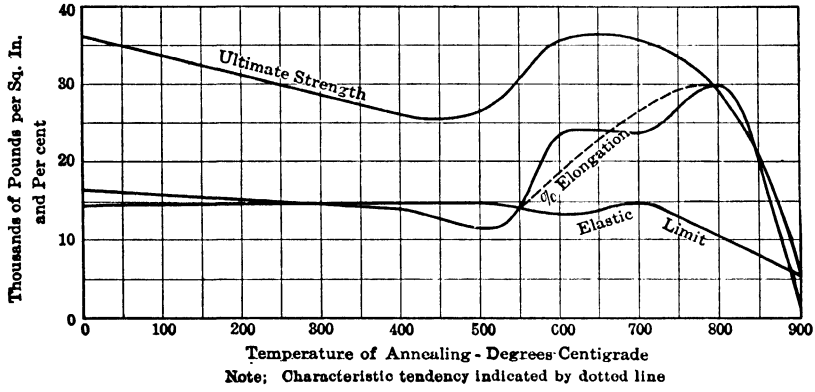

FIG. 38.—Mechanical changes of $^{91}/_{9}$ bronze at varying temperatures.

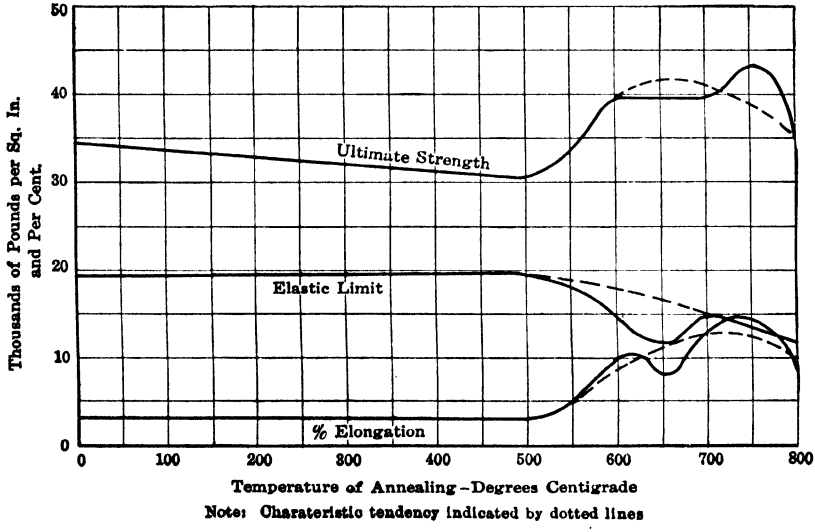

FIG. 39.—Mechanical changes of $^{87}/_{13}$ bronze at varying temperatures.

Goerens and Dumont,[1] and Guillet,[2] some physical properties by Wyss,[3] the specific heats by Chappell.[4] Bronzes occlude little gas;[5] they resist corrosion, less when rich in Cu than when rich in Sn.[6] Giolliti and Ceccareli,[7] studying bronzes with up to 10 per cent Sn, found that heat treatment affected the corrosion of the α solution, that the $\alpha + \beta$ alloy was more quickly attacked than the α alone, and that the greater the difference in composition between center and edge of a crystal the more rapid the attack. Impurities greatly affect the properties.[8] Shrinkage[9] is lessened by Zn,[10] increased by Co, Al, Si, Fe, and Ni.[11] Tensile strength is considerably lowered by Sb or much Zn;[12] it is raised by Co, Ni, Mn, and Fe; it is lowered by a rise in temperature.[13] Machining is made easier by Sb and Pb and more difficult by Mn and Ni; Pb in excess of 0.15 per cent affects the strength; and leady bronzes[14] are readily attacked by boiling water and steam. Patina formation is lessened by Zn and Al, intensified by Co, Ni, Sb, Fe, Si, and P. Fe gives the alloy a lighter color. Hardening is discussed by Grenet,[15] the wearing qualities by Portevin and Nussbaum.[16]

In the manufacture, oxidation has to be avoided. Heyn and Bauer[17] found that Cu_2O was readily reduced, $2Cu_2O + Sn = 4Cu + SnO_2$, the SnO_2 separating in large crystals which, insoluble in the alloy, rendered it less fluid. Jolibois and Thomas[18] made similar observations. Large charges are melted in reverberatory furnaces, small ones in crucibles;[19] in either case oxidation has to be avoided. Even a crucible and a charcoal cover do not absolutely prevent oxidation, as some Cu_2O is formed. This is most pronounced with alloys containing over 84 per cent Cu.

A powerful reducing agent, such as P or preferably P-Sn, is sometimes used to counteract the oxidation. This alloy,[20] containing about 5 per cent P, is prepared by charging a graphite crucible with stick P, covering with 1 in. of charcoal, filling with granulated (flake) tin (1 P : 10 Sn), giving a charcoal

[1] *Ferrum*, 1912–13, x, 21.
[2] *Rev. métal.*, 1913, x, 769.
[3] *Ferrum*, 1912–13, x, 167.
[4] *Op. cit.*, 1913, x, 271.
[5] Guillemain and Delachanal, *Rev. métal.*, 1911, viii, 1.
[6] Carpenter and Edwards, *Met. Chem. Eng.*, 1911, ix, 63.
[7] *Gazz. chim. ital.*, xxxix, 557; *J. Inst. Metals*, 1911, vi, 333.
[8] Miller, *Metallurgie*, 1912, ix, 63.
[9] Turner and Haughton, *J. Inst. Metals*, 1911, vi, 192.
[10] Wüst, *Metallurgie*, 1909, vi, 769; *Iron Age*, 1910, lxxxv, 790.
[11] Chamberlain, *J. Inst. Metals*, 1913, x, 193.
[12] Guillet and Revillon, *Rev. métal.*, 1910, vii, 429; *Metallurgie*, 1911, viii, 582.
[13] Johnson, *Met. Chem. Eng.*, 1911, ix, 399.
[14] Baily, *J. Soc. Chem. Ind.*, 1905, xlv, 52.
[15] *Compt. rend., Soc. Ind. Mining*, 1911, xiv, 138; *J. Inst. Metals*, 1911, vi, 334.
[16] *Sixth Internat. Congress Testing Materials*, 1912; *Ferrum*, 1913, x, 379.
[17] *Z. anorg. Chem.*, 1905, xlv, 520; *Metallurgie*, 1905, ii, 190, 201.
[18] *Rev. métal.*, 1913, x, 1264.
[19] Sperry, "Casting Brass for Rolling," *Brass World*, 1911, vii, 3.
[20] *Metal Ind.*, 1903, i, 36; 1909, viii, 3.

cover, putting on a cover and luting it, and bringing gently to a low-red in a pot furnace. The P, being volatilized, is taken up by the Sn. When the flame of burning P disappears, the charge is finished, the alloy stirred, skimmed, and poured into small ingot molds set in water. Portevin[1] found that, in making some castings in a strongly reducing atmosphere the ingots became porous, and required the addition of an oxidizing agent.

TABLE XIV.—REGULAR AND SPECIAL BRONZES

Class	Name	Composition, per cent					Color	Fracture	Malleability and ductility
		Cu	Sn	P	Si	Mn			
Regular	Malleable bronze..	98–94	2–6	.....	.....	....	Red to reddish-yellow.	Vesicular.	Rolled and hammered.
	Gun metal	92–88	8–12	.....	.....	.....	Reddish -yellow to dirty yellow.	Crystalline to fine-grained.	Difficult to roll, hard.
	Bell metal.	80–75	20–25	.....	.. ..	.....	Yellowish - gray to gray.	Fine-grained.	Cannot be rolled, hard.
	Speculum metal...	70–65	30–35	.....	. .	.....	Ash-gray to white.	Conchoidal.	Brittle, steely, susceptible of perfect polish.
Special	Phosphor-bronze	90–91	9–8	<1	. .	. .	Reddish-yellow.		
	Silicon-bronze.....	88	10	.....	. ..	2	White.		
	Manganese-bronze	.	. .	.....	.. .	0-tr.	.....		

In a fusion for bronze, the Cu is charged, covered with charcoal, and melted; then melted bronze scrap is added, and lastly the necessary Sn warmed to near its melting point. Alloys with from 4 to 6 per cent Sn are cast in metal, those richer in Sn in sand molds. A crucible will stand from 25 to 30 charges. Table XIV gives the compositions of some regular and special bronzes.

30. Regular Bronze.—The four general alloys under "regular bronzes" include many commercial varieties which contain other constituents beside Cu and Sn.[2]

1. *Machinery Bronzes.*—These alloys (Thurston's Kalchoids[3]) used as bearings contain from 2 to 8 per cent Zn, the Sn being added after the brass has been prepared. Ordinary bearing metal consists of Cu 81 to 87 per cent, Sn 19 to 13 per cent; the addition of Zn makes the alloy cast better and resist corrosion more effectively, but it increases the hardness, and with this the rate of wear. Nevertheless, it is much used. Thus Cu 81, Sn 17, Zn 2; Cu 84, Sn 12, Zn 4; Cu 82, Sn 10, Zn 8 are not uncommon mixtures. In general, a good bearing metal[4] must have at least two constituents, a hard one to support the load, and a soft one to act as a plastic support for the hard grains. Bearing

[1] *Rev. métal.*, 1913, x, 944.

[2] GUILLET and REVILLON, *Rev. métal.*, 1909, VI, 1251 (report to Copenhagen Internat. Congress Testing Materials).

[3] HOYT, "Structural Study," *J. Inst. Metals*, 1913, x, 235.

[4] CLAMER, *J. Franklin Inst.*, 1903, CLVI, 49; *Proc. Am. Soc. Testing Materials*, 1907, VII, 302; *Metal Ind.*, 1909, VII, 407; 1910, VIII, 209; JOB, *J. Franklin Inst.*, 1900, CXLIX, 439; *Iron Age*, May 31, 1900, p. 6; PRICE, *Proc. A. I. M. E.*, 1904–05, XXVI, 669; *Iron Trade Rev.*, Aug. 3, 1905, p. 32; ALLAN, *Metal Ind.*, 1910, VIII, 67.

metals are of two kinds, white or anti-friction *metals*,[1] in which Pb, Sb, and Sn (Cu), and bearing bronzes,[2] in which Cu and Sn (Zn and Pb) are the leading metals. As the rate of wear in a bronze bearing diminishes with the decrease of Sn and the increase of Pb, the latter has replaced a considerable portion of the former; thus the Pennsylvania Railroad's plastic bronze (Ajax plastic metal) consists[3] of Cu 64, Sn 5, Pb 30, Ni 1, the Ni being necessary to cause rapid setting and thus to counteract liquation.[4] Thurston[5] considers the strongest ternary bronzes to have the composition Cu 58 to 54, Sn 1.5 to 2.5, Zn 44 to 40.

2. *Gun metal*[6] has lost its former importance; the Uchatius gun contains Cu 92, Sn 8. Modern gun metal contains some Zn, *e.g.*, Cu 88, Sn 10, Zn 2; Cu 86, Sn 10, Zn 4; Cu 87, Sn 8, Zn 5.[7] Specifications of the Bureau of Steam Engineering U. S. Government, July 1, 1910, call for Cu 87 to 89, Sn 9 to 11, Zn 1 to 3, Fe < 0.06, Pb < 0.20.

3. *Bell metal*, as the name indicates, is very resonant; large bells contain 25 per cent Sn, small ones 15 per cent. Beside the main constituents, bell metal sometimes contains small amounts of Zn and Ag. The tone of a bell depends more upon its shape than upon its composition.

4. *Statuary bronze* contains Cu 90 to 78, Sn 2 to 4, Zn 10 to 18 per cent, sometimes small amounts (1 to 4 per cent) of Pb. Variations in composition are governed by the color (oranges to yellows) desired for the casts; the amount of Sn is kept low to avoid brittleness, that of Zn within given limits, as its whitening power is great.

5. *Coin or medal bronze* contains Cu 90 to 96, Sn 10 to 4 per cent, sometimes 1 per cent Zn.

6. *Speculum (mirror) metal*, once used for the manufacture of reflectors for telescopes, has been replaced by silvered glass. The constituents δ and Cu_3Sn are the cause of its susceptibility of a fine polish.

31. Special Bronze. (1) *Phosphor-bronze.*—The addition of 1 per cent P to bronze increases greatly the strength and decreases the elongation. However, comparatively little metal going by the name of phosphor-bronze contains more than a trace of P, the alloys P-Sn or P-Cu having been used in the manufacture to prevent or correct oxidation and thus to increase the good mechanical properties.

The form in which P is present in real phosphor-bronze has not been definitely settled. Guillet[8] believes that P enters the α constituent with alloys con-

[1] CHARPY, "Contributions à l'étude des alliages," p. 201; *Metallographist*, 1899, II, 9; BEHRENS and BAUCKE, *op. cit.*, 1900, III, 4.

[2] ALLAN, *Metal Ind.*, 1909, VII, 243, 321; 1910, VIII, 67, 289; 1911, IX, 155, 295, 476; CLAMER, *op. cit.*, 1909, VII, 407; 1910, VIII, 208; 1911, IX, 418; HEYN and BAUER, *Stahl u. Eisen*, 1911, XXXI, 1416.

[3] CLAMER, *loc. cit.*, *Metal Ind.*, 1911, IX, 114.

[4] JONES, "High-lead Bronzes," *Metal Ind.*, 1906, IV, 81.

[5] *Op. cit.*, p. 446.

[6] PRIMROSE, *J. Inst. Metals*, 1910, IV, 248; 1913, IX, 158; "Mechanical Properties," *Brass World*, 1913, IX, 176.

[7] MCWILLIAM, A. and LONGMUIR, P., "General Foundry Practice," Lippincott, Philadelphia, 1912, p. 321; *J. Iron Steel Inst.*, 1903, I, 462.

[8] "Les Alliages Métalliques," Dunod-Pinat, Paris, 1906, p. 556.

taining < 9 per cent Sn; Law[1] states that alloys with > 9 per cent Sn show the δ constituent and the compound Cu_3P, which may form a eutectic mixture; Hudson and Law[2] believe they have found a ternary eutectic. According to the chemical and mechanical investigations of Philip,[3] phosphor-bronzes may be grouped according to their uses in three classes—*heavy castings:* Cu 90 to 92, Sn 7.4 to 9.7, P 0.3 to 0.6, tensile strength > 34,000 lb., elongation 20 per cent in 2 in.; *rod, sheet, wire:* Cu 91.5 to 97.5, Sn 8.4 to 2.25, P 0.1 to 0.25, when unannealed, tensile strength 60,000 lb., elongation 10 per cent in 2 in., when annealed, 40,000 lb. and 40 per cent in 2 in.; *bearings:* Cu 84.5 to 89.1, Sn 14.5 to 10.1, P 0.8 to 1.0 and possibly higher. The specifications of the U. S. Bureau of Steam Engineering of July 1, 1910, call for Cu 80 to 90, Sn 6 to 8, Zn 2 to 14, P 0.30, Fe < 0.06, Pb < 0.20.

The main advantages of phosphor-bronze are its strength, its resistance to corrosion,[4] and, if high enough in P, its hardness to resist abrasion combined with a low friction coefficient, all of which make it suited for bearings. The method of manufacture[5] differs little from that of other alloys.

The effect of casting temperature on the properties of phosphor-bronze is given by Bailey.[6]

2. *Silicon-bronze.*[7]—This is a bronze to which has been added during the melt about 10 per cent silicon-copper as a deoxidizing agent in order to reduce any SnO_2 that has been formed. No Si or only 0.05 per cent remains in the alloy. The greater electric conductivity makes silicon-bronze preferable to phosphor-bronze for telephone wires. The electric conductivity curves of bronze of Ledoux[8] show two sharp cusps at Cu_4Sn and Cu_3Sn.

3. *Manganese-bronze.*—Manganese plays a double rôle; it acts as a deoxidizer; and gives the Cu-Sn alloy special mechanical properties. Guillet[9] prepared the alloys given in Table XV and subjected them to mechanical tests.

TABLE XV.—MANGANESE-BRONZES

Composition, per cent			Tensile strength, pounds per square inch	Elastic limit, pounds per square inch	Elongation in 4 in., per cent
Cu	Sn	Mn			
90.93	8.82	none	31,200	11,800	23.0
90.12	9.20	trace	34,200	11,400	28.0
87.64	10.41	1.67	27,200	12,800	20.0
89.38	8.61	0.69	20,800	12,400	7.5
85.87	8.76	3.10	1,500	15,000	

[1] LAW, E. F., "Alloys," Lippincott, Philadelphia, 1909, p. 155.

[2] *J. Inst. Metals*, 1910, III, 161.

[3] *J. Inst. Metals*, 1909, I, 164; *Foundry*, 1908–09, XXXIII, 231.

[4] *Brass World*, 1910, VI, 398; Curry, "Electrolytic Corrosion," *Electrochem. Met. Ind.*, 1906, IV, 223.

[5] SPERRY, *Brass World*, 1907, III, 399.

[6] *J. Inst. Metals*, 1923, XXX, 401.

[7] SPERRY, *Brass World*, 1905, I, 75.

[8] *Compt. rend.*, 1912, CLV, 35; *J. Inst. Metals*, 1912, VIII, 335.

[9] *Génie civil*, 1905, XLVII, 147.

Tough, malleable manganese-bronze consists of Cu 75 to 76, Mn 16 to 17, Sn 5 to 6 per cent; it is brass-yellow. An addition of less than 5 per cent Al increases the strength and elastic limit, and gives it a whitish color. Sometimes Zn in amounts less than 5 per cent is added to the alloy. A common composition is Cu 88, Sn 10, Mn 2. This alloy is ductile, hard, tough, and reddish-white.

32. Aluminum-bronze (Cu-Al).—The older investigations into the constitution by Le Chatelier,[1] Campbell and Mathews,[2] Guillet,[3] and Dejean[4] have been supplemented by the more recent work of Carpenter and Edwards,[5] Curry,[6] and Gwyer.[7] According to the curve of Curry (Fig. 40), who obtained his data

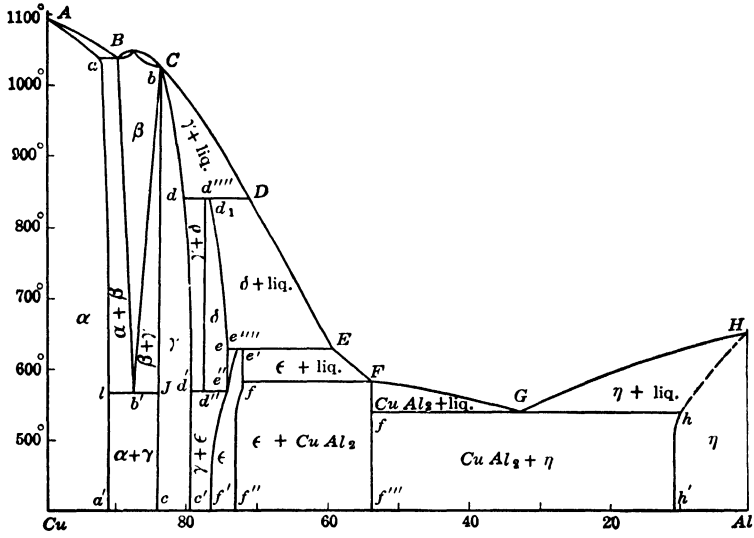

FIG. 40.—Alloy-series Cu-Al, aluminum bronze.

from heating, instead of cooling curves, and thus avoided all undercooling, there exist six solid solutions α, β, γ, δ, ϵ, η, the chemical compound $CuAl_2$, an eutectic mixture $CuAl_2 + \eta$, and two transformation temperatures below which β and δ are unstable.[8] The nature, limits of composition, and color of crystals are given in Table XVI.

[1] *Bull. Soc. d'Enc.*, 1895, X, 573.

[2] *J. Am. Chem. Soc.*, 1902, XXIV, 253.

[3] *Rev. métal.*, 1905, II, 568; Summary: *op. cit.*, 1908, V, 413.

[4] *Op. cit.*, 1906, III, 240.

[5] *Eighth Report Alloys Research Comm.*, 1907, 57; *Rev. métal.*, 1908, V, 425; *Metallurgie*, 1907, IV, 253.

[6] *J. Phys. Chem.*, 1907, XI, 425; *Metallurgie*, 1908, V, 540.

[7] *Z. anorg. Chem.*, 1908, LVII, 113.

[8] Structure of $\alpha + \gamma$ in alloys with Cu 84 to 90 per cent: HANEMANN and MERICA, *Intern. Z. Metallog.*, 1913, IV, 209; Structure of β: PORTEVIN, *op. cit.*, 1913, IV, 257.

TABLE XVI.—COMPONENTS OF ALUMINUM-BRONZE

Component	Nature	Per cent copper at			Color
		1,000° C.	700° C.	500° C.	
α	Solid solution of Cu and Al	100–92	100–91	100–91	Copper-red to golden-yellow.
β	Solid solution of Cu and Al	90–85	88.5–87	Unstable	Yellow.
γ	Solid solution of Cu and Al	84–83	84–80	84–79	White.
δ	Solid solution of Cu and Al	Liquid	87–85	Unstable	White.
ϵ	Solid solution of Cu and Al	Liquid	Liquid	73.5–76.0	White.
η	Solid solution of Cu and Al	Liquid	Liquid	0–11	White.
$Cu\ Al_2$	Chemical compound.....	Liquid	Liquid	53.7[a]	White.
Eutectic	$Cu\ Al_2 + \eta$.....	Liquid	Liquid	32[b]	White.

[a] Freezes at 585° C.
[b] Freezes at 543° C.

The tensile strength and ductility of alloys with from 100 to 85 per cent Cu and from 0 to 25 per cent Cu, as determined by Curry and Woods,[1] are given in Figs. 41 and 41*a*, in which curve *A* represents the chill-cast alloy, *B* the alloy annealed below 565° C., and *C* the alloy annealed and quenched above 565° C.[2] The alloys containing from 25 to 85 per cent Cu are too brittle to be of any technical value. The tensile strength of Cu is gradually increased by the presence of Al until the Cu content has fallen to 92 per cent, when the curve

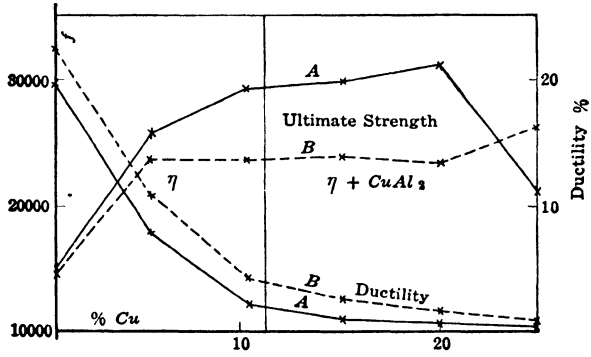

FIG. 41.—Tensile strength and ductility of copper-aluminum alloys.

rises rapidly to a maximum with 90 per cent Cu and then falls. The alloy is made up largely of α crystals, up to 91 per cent Cu, when β crystals begin to appear. Cast and annealed alloys with up to 92 per cent Cu show little difference in tensile strength when the curves *A*, *B*, and *C* begin to separate, the 90-per cent alloy chilled showing 100,000 lb. tensile strength.

Ductility shows a greater variation than does tensile strength. With the addition of Al to Cu, ductility rises at first quickly, then more slowly until the alloy with 95 per cent Cu has been reached, when the approximate parallelism

[1] *J. Phys. Chem.*, 1907, XI, 462.

[2] EDWARDS, *Intern. Z. Metallog.*, 1912, III, 179; PORTEVIN and ARNON, *Compt. rend*, 1912, CLIV, 511.

of the three curves ceases. Alloys with from 92 to 95 per cent Cu have ductilities of from 50 to 60 per cent. In alloys with from 91 to 92 per cent Cu, ductility drops from 57.5 to 16 per cent, and a further 1.2 per cent with the 90 per cent alloy, showing the stiffening effect of β crystals. The strongest alloy contains 90 per cent Cu, the most ductile 92 to 95 per cent Cu when chilled above 566° C.[1]

Figure 41*a* shows the effects of additions of Cu to Al; the tensile strength is at first rapidly increased until the Al has taken up 5 per cent Cu, then more gradually until a maximum is reached with 20 per cent Cu. The ductility curve shows a steady decrease with additions of Cu, more rapid at first than later on. The most dependable alloy is the one with 10 per cent Cu, which lies on the edge of the η field.

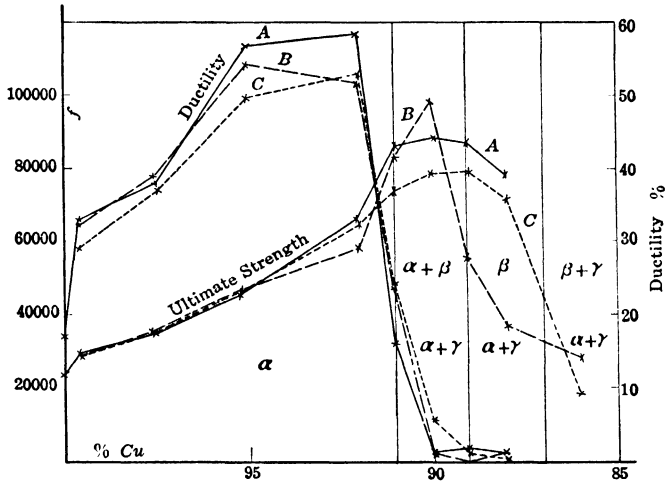

FIG. 41*a*.—Tensile strength and ductility of copper-aluminum alloys.

Electric conductivity is treated by Wilson[2] and Broniewski.[3]

Formerly Cu-Al alloys were prepared by the Cowles electrothermic process; this gave way to the melting together of the two component metals. The greatest difficulty met with in the manufacture[4] is oxidation of the surface, causing dirty castings; the only remedy known is to stir as little as possible. Upon adding Al to melted Cu there is a rise in temperature of from 150 to 250° C., due to the heat of solution.[5]

Cu with from 3 to 5 per cent Al loses its reddish color. The $^{90}/_{10}$ alloy is yellow with a greenish tinge; is malleable cold, but much more when hot; does not change its color when exposed to moist air, but tarnishes when heated; is

[1] CARPENTER and EDWARDS, "Resistance to Internal Pressure," *Met. Chem. Eng.*, 1911, IX, 63.

[2] *Engineering*, 1904, LXXVIII, 33.

[3] *Proc. Internat. Assoc. Testing Materials*, June, 1912.

[4] SPERRY, *Metal Ind.*, 1904, II, 3.

[5] RICHARDS, *Electrochem. Ind.*, 1903, I, 575.

not attacked by salt water, NH_3, nor H_2S; is slowly attacked by dilute H_2SO_4; HCl dissolves the Al.

The $^{90}/_{10}$ alloy containing 1 to 2 per cent Si is stronger and much less ductile than the normal alloy; a small amount of iron greatly increases the strength.

Cu-Al-Mn alloys have been investigated by Rosenhain and Lantsberry.[1] They find that the effect of Mn upon Cu is similar to that of Al.

The constitution and age-hardening of Al-Cu-Mn alloys have been studied by Gayler[2] and some other properties by Konno.[3] These alloys, commonly known as duralumin, are primarily alloys of aluminum, but copper is an important constituent.

The effects of additions of small amounts of P upon the mechanical properties of the $^{95}/_{5}$ and $^{90}/_{10}$ alloys have been studied by Read.[4]

33. Minor Alloys.—Cu and Ti are treated by Rossi,[5] Guillet,[6] and Bensell;[7] the effects of Cr, W, and Va are reviewed by Escard;[8] of Hg by Guntz-de Greift.[9]

[1] *Ninth Report Alloys Research Comm.*, 1910, pp. 119–339.
[2] *J. Inst. Metals*, 1923, XXX, 139.
[3] Science Reports, Tôhoku Imp. Univ., XI, No. 4, 1922.
[4] *J. Inst. Metals*, 1913, X, 344.
[5] *Electrochem. Met. Ind.*, 1908, VI, 257; 1909, VII, 88.
[6] "Étude industrielle des alliages métalliques," Dunod-Pinat, Paris, 1906, pp. 774 *et seq.*
[7] *Metall u. Erz*, 1914, XI, 10, 46.
[8] *Génie civil*, 1909, LV, 74, 85; *Oesterr. Z. Berg. Hüttenw.*, 1910, LVIII, 201, 215.
[9] *Compt. rend.*, 1912, CLIV, 213, 357.

CHAPTER V

COPPER COMPOUNDS

34. Cuprous Oxide, (Cu_2O: 88.81 per cent Cu; 127.2 Cu_2 + 16 O = 143.2 Cu_2O + 43,800 cal.).—It occurs as cuprite; is formed by heating solid copper in air above 1,060° C., at which temperature the CuO formed is decomposed;[1] or by keeping melted copper above 1,200° in air, when it becomes covered with fused Cu_2O; or by roasting copper sulphide. The color of Cu_2O is cherry-red when compact and the luster metallic; it often forms isometric crystals; the powder is carmine-red; the melting point is given as 1,166° C.[2] and as 1,200°;[3] it is somewhat soluble in melted Cu., §8.

Prolonged heating between 500 and 1,000° C. changes Cu_2O into CuO; heating above 1,069° C. splits this into $Cu_2O + O$; the reaction $2Cu_2O = 2Cu_2 + O$ occurs at 2,208°.[4] Cu_2O is readily reduced to metal by H at 147°[5] C., C, CO, C_xH_y; the reduction by C begins at about 500° C.[6] Heating with Cu_2S gives $Cu_2S + 2Cu_2O \rightleftarrows 6Cu + SO_2$; this reaction begins[7] at about 450° C., and is finished[8] at about 1,100°. Schenck and Hempelman[9] have shown by experiments in an evacuated tube that the reactions $2Cu_2O + Cu_2S \rightleftarrows 6Cu + SO_2$ and $2CuSO_4 + Cu_2S \rightleftarrows Cu_2O + 3SO_2$ are reversible, the second taking place at a lower temperature than the first. In furnace work in which there is practically no partial pressure of SO_2, both reactions can proceed only from left to right; and the second will be of minor importance, as $CuSO_4$ begins to give off SO_3 at 670° C. and is completely decomposed at 736° C.[10] Heating with 1.5 parts by weight of PbO forms a readily fusible mixture; heating with FeS gives $2Cu_2O + 3FeS = (Cu_2S)_2 \cdot FeS + 2FeO$; the reaction begins at 270 to 280° C. and the speed increases with the temperature.[11] Cu_2O is insoluble in H_2O; solubilities and reactions in wet processes are expressed by $Cu_2O + NH_3 + O = xCuO \cdot NH_3$; $Cu_2O + 2HCl = Cu_2Cl_2 + H_2O$ (addition of H_2O precipitates Cu_2Cl_2); $Cu_2O + H_2SO_4 = Cu + CuSO_4 + H_2O$; $Cu_2O + Fe_2(SO_4)_3 + H_2O = 2CuSO_4 + Fe_2SO_6 + H_2$; $Cu_2O + Fe_2(SO_4)_3 + H_2SO_4 = 2CuSO_4 + 2FeSO_4 + H_2O$;[12] $3Cu_2O + 2FeCl_2 = Cu_2 + 2Cu_2Cl_2 + Fe_2O_3$.

[1] WÖHLER, *Z. Elektrochem.*, 1906, XII, 784.
[2] HEYN, *Mitt. kgl. Versuchsanst.*, 1900, XVIII, 320.
[3] SLADE and FARROW, *Proc. Roy. Soc., Ser. A.*, 1912, LXXXVII, 524.
[4] STAHL, *Metallurgie*, 1907, IV, 690.
[5] OTIN, *Metallurgie*, 1912, IX, 98.
[6] DOELTZ and GRAUMANN, *op. cit.*, 1907, IV, 421.
[7] DOELTZ and GRAUMANN, *loc. cit.*
[8] HEYN and BAUER, *Metallurgie*, 1906, III, 83.
[9] *Metall u. Erz*, 1913, X, 283; see also STUBBS, *J. Soc. Chem. Ind.*, 1913, XXXII, 31.
[10] See "Kernel Roasting," §54.
[11] JUSCHKEWITSCH and SCHILOWSKI, *Metallurgie*, 1912, IX, 543.
[12] THOMPSON, *Electrochem. Ind.*, 1904, II, 227.

35. Cupric oxide (CuO: 79.8 per cent Cu; 63.6 Cu + 16 O = 79.6 CuO + 37,700 cal.) occurs as tenorite (melaconite); is formed by heating in air Cu_2O below 1,000° C.; by dead-roasting copper sulphide; by heating $CuCO_3$, $Cu(NO_3)_2$, $CuSO_4$, precipitated $Cu(OH)_2$. It is brownish-black to black; has no luster; may form isometric crystals; is decomposed into $Cu_2O + O$ by heating above 1,069°,[1] into $Cu + O$ at 2,208°;[2] is decomposed by Fe at about 740° C.;[3] is readily reduced to metal by H, C, CO, C_xH_y, as is Cu_2O, the reduction by H begins at 250° C., by CO at about 160° and is 97 per cent at 325°,[4] by CH_4 at a red heat.[5] Heating with Cu_2S gives $Cu_2S + 2CuO = 4Cu + SO_2$; the temperature limits are similar to those of Cu_2O; heating with 1.8 parts by weight of PbO gives a readily fusible mixture; heating with FeS gives $6CuO + 4FeS = 3Cu_2S + 4FeO + SO_2$. It is insolube in H_2O; soluble in NH_3, $(NH_4)_2CO_3$; partly soluble in hot NH_4Cl; readily souble in dilute acids. In wet processes the following reactions are recognized: $3CuO + 2FeCl_2 = Cu_2Cl_2 + CuCl_2 + Fe_2O_3$; $6CuO + 4FeCl_3 = 6CuCl_2 + 2Fe_2O_3$; $3CuO + 6FeSO_4 + 3H_2O = 3CuSO_4 + 2Fe_2O_3 \cdot Fe_2 \cdot (SO_4)_3 + 6H$; $3CuO + Fe_2(SO_4)_3 = 3CuSO_4 + Fe_2O_3$; $3CuO + 3Fe_2(SO_4)_3 = 3CuSO_4 + Fe_2O_3 \cdot 2Fe_2(SO_4)_3$. Cupric hydroxides are formed by precipitation from dilute solutions of CuO salts.

36. Cupric Carbonate ($CuCO_3$: 51.45 per cent Cu; $63.6Cu + 12C + 48O = 123.6CuCO_3 + 146{,}100$ cal.).—The neutral salt is not known. Basic salts occur as malachite and azurite; they are formed by precipitation of CuO solutions with alkali carbonates, and are readily decomposed, by heating, into CuO, CO_2, and H_2O.

37. Copper Silicates.—These occur only as cupric hydrous silicates, dioptase, and chrysocolla.

Cuprous Silicates.—Otin[6] has shown that, by heating Cu_2O and SiO_2 in varying proportions, there are formed four silicates, $5Cu_2O \cdot SiO_2$, $3Cu_2O \cdot SiO_2$, $2Cu_2O \cdot SiO_2$, and $1Cu_2O \cdot SiO_2$. They begin to form at 600° C. and sinter at 900°; this is especially noticeable with $2Cu_2O \cdot SiO_2$ and $1Cu_2O \cdot SiO_2$. Single pieces have a bluish-black color and show crystallinity; the powder is brownish-red to light brown. The silicates are brittle, the hardness decreasing as the copper content increases. With the specific gravity of Cu_2O as 5.744, this figure falls with increase of SiO_2 and reaches 4.995 with Cu_2O 70.36 + SiO_2 29.63. Tests with $2Cu_2O \cdot SiO_2$ and $1Cu_2 \cdot OSiO_2$ as to the chemical behavior showed that these compounds are soluble in concentrated HNO_3 and dilute CH_3CO_2H; readily so in HCl; slowly in H_2SO_4; and that they are attacked by NH_3. The reduction in a current of H begins a little above 147° C.; in a current of CO it begins at 180°. The speed of reaction increases rapidly with rise of temperature; at 220 to 245° all the Cu_2O is reduced to Cu.

[1] SLADE and FARROW, *Proc. Roy. Soc., Ser. A.*, 1912, LXXXVII, 524; *J. Inst. Metals*, 1913, IX, 207; *Met. Chem. Eng.*, 1913, XI, 105; *Z. Elektrochem.*, 1912, XVIII, 817.

[2] STAHL, *Metallurgie*, 1907, IV, 690.

[3] FRIEDRICH, *Stahl u. Eisen*, 1911, XXXI, 2040.

[4] HOWE, *Trans. A. I. M. E.*, 1878–79, VII, 444.

[5] Other data: FAY, SEEKER, LANE and FERGUSION, *Mineral Ind.*, 1911, XX, 472.

[6] *Metallurgie*, 1912, IX, 92.

Cuprous silicates are readily decomposed by FeO, CaO, *e.g.*, $Cu_4SiO_4 + 2FeO = 2Cu_2O + Fe_2SiO_4$; by Fe, FeS, Cu_2S as indicated by $Cu_4SiO_4 + 2Fe = 4Cu + Fe_2SiO_4$, by $Cu_4SiO_4 + 2FeS = 2Cu_2S + Fe_2SiO_4$, by $Cu_4SiO_4 + Cu_2S = 6Cu + SiO_2 + SO_2$.

Cupric Silicates.—These are formed by heating in air CuO and SiO_2; they form a brownish-black pasty mass; in the presence of a reducing agent some CuO will be reduced to Cu_2O and cause the formation of a blood-red slag.

38. Copper Sulphides.—1. *Cuprous sulphide* (Cu_2S: 79.87 per cent Cu; 127.2 Cu_2 + 32 S = 159.2 Cu_2S + 20,300 cal.) occurs as chalcocite; is readily formed by repeated heating of Cu filings and S; by immersing Cu in a bath of boiling S and heating the product with exclusion of air; and by allowing S vapor to act upon red-hot Cu. It is bluish-black, amorphous or crystalline according to the mode of preparation, melts at 1,121° C.;[1] an excess of S over the theoretical lowers the melting point.[2] Other melting points given are 1,085,[3] 1,091,[4] 1,105,[5] 1,123,[6] 1,127,[7] 1,155,[8] 1,130;[9] 1,127 and 1,130 are the best figures. It forms an eutectic with Cu (§17); its intermetallic compounds are discussed under "Matte"(§100). Next to Mn it has a stronger affinity for S than has any other metal.[10] It is stable at elevated temperature in a neutral atmosphere, and is not oxidized by air at ordinary temperature. When heated with access of air,[11] SO_2 is given off at temperatures ranging from 430 to 680° C., depending upon the size of grain. The sample glows at the same time and is converted slowly at a gradually increasing temperature into CuO; during the roast it passes through the stages of Cu_2O and $CuSO_4$. Its tendency to sinter while roasting must be attributed to some compound of Cu_2S and Cu_xO. Laboratory experiments by Warlimont[12] showed that in 4 hr. 42 per cent of the Cu was converted into $CuSO_4$. The presence of FeS greatly increases sulphatization (§196). Air forced through fused Cu_2S at a temperature of about 1,150° C. decomposes it into Cu_2 and SO_2 (converter process, §127); CO_2 oxidizes it slowly at a red heat (Hampe). CO has no effect. At a red heat H decomposes it slowly but completely;[13] water vapor does the same at a white heat.[14] Fusing with Fe may decompose Cu_2S or not, as the reaction $Cu_2S + Fe \rightleftarrows Cu_2 + FeS$ is reversible and incomplete

[1] FRIEDRICH, *Metallurgie*, 1904, IV, 672.

[2] FRIEDRICH, *op. cit.*, 1905, V, 52.

[3] RÖNTGEN, *op. cit.*, 1906, III, 479.

[4] BODLÄNDER and IDASZEWSKI, *Z. Elektrochem.*, 1905, X I, 161; *Eng. Mining J.*, 1905, LXXIX, 827.

[5] BORNEMANN, *Metallurgie*, 1909, VI, 623.

[6] BAYKOFF and TROUTNEFF, *Rev. métal.*, 1909, VI, 519.

[7] HEYN and BAUER, *Metallurgie*, 1903, III, 73.

[8] HOFMAN, CAYPLESS and HARRINGTON, *Trans. A. I. M. E.*, 1907, XXXVIII, 142.

[9] HAYWARD, *Trans. A. I. M. E.*, 1914, XLVIII, 141.

[10] STÜTZ, *Metallurgie*, 1907, IV, 697.

[11] FRIEDRICH, *Metallurgie*, 1909, VI, 169.

[12] *Metallurgie*, 1909, VI, 132.

[13] HAMPE, *Chem. Z.*, 1885, IX, 1442; HAUPT, *Eng. Mining J.*, 1904, LVIII, 511; HEYN and BAUER, *Metallurgie*, 1906, III, 85.

[14] GAUTIER, *Compt. rend.*, 1906, CXLII, 1465.

in either case.[1] The experiments of Gibb and Philp[2] and Bakoff and Troutneff[3] show that the direction of the reaction depends upon the relative amounts of reagents used. Gibb and Philp decomposed Cu_2S, fused in a crucible, with an iron rod, *i.e.*, a large excess of iron, and obtained a copper bottom (not analyzed) and a matte with Cu 60.6, Fe 17.8, S 21.7 per cent; while Bakoff and Troutneff, using a mixture of 90 per cent Cu and 10 per cent FeS, obtained a button with Cu 94.49 per cent, Fe 5.32 per cent, S not determined, and a matte with Cu 60.7, Fe 17.6, S 21.7 per cent, *i.e.*, one of the same composition as Gibb and Philp. Juschkewitsch[4] goes one step further. He found that upon heating Cu_2S and FeS there was formed already at 200° C. the compound $(Cu_2S)_2 \cdot FeS$, the speed of the reaction increasing with the temperature. Heating Cu_2S with Fe gave at 400° C. the same compound, $3Cu_2S + Fe = (Cu_2S)_2 \cdot FeS + Cu$. Reversing conditions, the reaction $4Cu + 3FeS = (Cu_2S)_2\ FeS + Fe$ took place again at 400° C. In both cases the speed of the reaction increased with the temperature. He proved the existence of $(Cu_2S)_2 \cdot FeS$ in copper matte; this is substantiated by the freezing-point curve of Bornemann and Schreyer[5] discussed in §100. On the other hand, Carpenter and Hayward[6] find no evidence of such a compound. Juschkewitsch thus is in agreement with his predecessors as regards reversibility of the reaction, but gives a different form to the equation. The system Cu_2S-Cu_2Cl_2 has been studied by Truthe,[7] who found that an eutectic with 16 per cent Cu_2S was formed, which solidified at 392° C. Heating Cu_2S with 20 times its weight of PbO causes all the S to be oxidized.[8]

Cu_2S is practically insoluble in H_2O, slowly soluble in NH_3. Cold HNO_3 splits it into CuS and Cu, hot HNO_3 dissolves it with separation of S, hot concentrated HCl dissolves it slowly with evolution of H_2S. Concentrated H_2SO_4 forms CuS, $CuSO_4$, and SO_2; dilute HSO_4 in the presence of air acts very slowly.

In wet processes the following reactions are common: $Cu_2S + 2Fe_2(SO_4)_3 = 2CuSO_4 + 4FeSO_4 + S$;[9] $Cu_2S + 2FeCl_3 = Cu_2Cl_2 + 2FeCl_2 + S$; $Cu_2S + 2CuCl_2 = 2Cu_2Cl_2 + S$. Cu_2S is a good electric conductor; it is not completely decomposed by pyro-electrolysis,[10] being split into non-conducting CuS and S; suspended in an acid electrolyte of $CuSO_4$, it is decomposed into Cu_2 and S.

2. *Cupric sulphide* (CuS: Cu 66.4, S 33.6 per cent; 63.6 Cu + 32 S = 95.6 CuS + 10,100 cal.) occurs as covellite; is formed in the dry way by heating

[1] RÖNTGEN, *Metallurgie*, 1906, III, 479; SCHÜTZ, *op. cit.*, 1907, IV, 663.
[2] *Trans. A. I. M. E.*, 1906, XXXVI, 665.
[3] *Rev. métal.*, 1909, VI, 535.
[4] *Metallurgie*, 1912, IX, 543.
[5] *Metallurgie*, 1909, VI, 619.
[6] *Eng. Mining J.-Press*, 1923, CXV, 1055.
[7] *Z. anorg. Chem.*, 1912, LXXVI, 161; *Rev. métal. Extr.*, 1913, X, 378.
[8] PERCY, "Metallurgy," 1861, p. 262.
[9] THOMPSON, *Electrochem. Ind.*, 1904, II, 27.
[10] BODLÄNDER and IDASZEWSKI, *Z. Elektrochem.*, 1905, XI, 163; *Eng. Mining J.*, 1905, LXXIX, 827.

Cu in boiling S; in the wet way by precipitation from cupric solutions with H_2S as a brownish-black precipitate which sulphatizes readily on exposure to air. It is soluble in HNO_3 and HCl; insoluble in dilute H_2SO_4, caustic alkali, and fixed-alkali sulphide; slightly soluble in NH_5S; it decomposes silver salts $Ag_2SO_4 + CuS = Ag_2S + CuSO_4$.

39. Cupric sulphate (blue vitriol) ($CuSO_4 + 5$ aq.: CuO 31.8, SO_3 32.1, H_2O 36.1 per cent; Cu 25.40 per cent; 63.6 Cu + 32 S + 64 O = 159.6 $CuSO_4$ + 181,700 cal., in dilute solution 197,200 cal.) occurs as chalcantite; is formed by a sulphatizing roast of Cu_2S or CuSi by dissolving Cu in hot dilute H_2SO_4 in the presence of air; by the combined action of SO_2, air, and steam upon finely divided Cu (Rössler process[1]); by electrolytic solution of anode copper with dilute H_2SO_4 as electrolyte; by solution of CuO in hot dilute H_2SO_4; and by the action of $Fe_2(SO_4)_3$ upon Cu_2S, Cu_2O, CuO.

It forms sky-blue triclinic crystals, and mixed crystals with the isomorphous $FeSO_4 + 7$ aq.; it slowly weathers and disintegrates by prolonged exposure to atmosphere through a partial loss of H_2O, and becomes whitish.

Heating $CuSO_4 + 5$ aq. in a current of dry air[2] converts it between 27 and 30° C. into sky-blue $CuSO_4 + 3$ aq., which is changed between 93 and 99° into pale-blue $CuSO_4 + 1H_2O$, and this gives up its molecule of H_2O at 150° with the formation of white $CuSO_4$. The anhydrous salt is converted at 341° into $8CuO \cdot 3SO_3$ to the limit of 5.87 per cent; at 653° orange-colored $2CuO \cdot SO_3$ begins to be formed, the dissociation becoming energetic at 670°; the final decomposition into black CuO and SO_3 begins at 704° and becomes pronounced at 736° C.

In a reducing roast with charcoal[3] there action $2\ CuSO_4 + 2\ C = Cu_2O + 2\ SO_2 + CO_2 + CO$ takes place below 650° C. The reactions $CuSO_4 + Cu_2S = Cu_3 + 2SO_2$,[4] $2CuSO_4 + Cu_2S = 2Cu_2O + 3SO_2$,[1] and $4CuSO_4 + Cu_2S = 6CuO + 5SO_2$, said to take place at elevated temperatures, are problematical in metallurgical furnaces, owing to the dissociation of $CuSO_4$. The salt $CuSO_4 + 5$ aq. is soluble in H_2O. Its solubility at different temperatures is shown in Table XVII.

Table XVIII shows the specific gravities[5] and concentrations of blue vitriol solutions at 18° C.

The electric conductivity of mixtures of blue vitriol and sulphuric acid solutions[6] is given in Tables XIX and XX.

In practical work most strengths of solutions are given in terms of percentages. To convert the values in Table XIX into these units, Table XX may be used.

[1] HOFMAN, "General Metallurgy," 1913, p. 882.

[2] HOFMAN and WANJUKOW, *Trans. A. I. M. E.*, 1912, XLIII, 523; complete reference to earlier work is given.

[3] SCHERR, *School Mines Quart.*, 1899–1900, XXI, 66; HOWE, *op. cit.*, 1900–01, XXII, 381.

[4] See §§54, 109.

[5] Relations of specific gravity and degrees Beaumé scale, see HOFMAN, "General Metallurgy," 1913, p. 505.

[6] RICHARDSON and TAYLOR, *Met. Chem. Eng.*, 1911, IX, 536.

TABLE XVII.—SOLUBILITY OF BLUE VITRIOL IN WATER

Wt. dissolved in 100 g. H_2O	0° C.	15° C.	25° C.	30° C.	40° C.	50° C.	60° C.	70° C.	80° C.	90° C.	100° C.
Grams $CuSO_4$.....	14.9	19.3	22.3	25.5	29.5	33.6	39.0	45.7	53.5	62.7	73.5
Grams $CuSO_4$ + 5 aq..	23.3	30.2	34.9	39.9	46.2	52.6	61.1	71.6	83.8	98.2	115.0

TABLE XVIII.—SPECIFIC GRAVITIES AND CONCENTRATIONS OF BLUE-VITRIOL SOLUTIONS AT 18° C.

Specific gravity	Per cent of $CuSO_4$ +5 aq.	Per cent of $CuSO_4$	Specific gravity	Per cent of $CuSO_4$ +5 aq.	Per cent of $CuSO_4$
1.0063	1	0.637	1.1063	16	10.200
1.0126	2	1.275	1.1135	17	10.837
1.0190	3	1.912	1.1208	18	11.474
1.0254	4	2.550	1.1281	19	12.111
1.0319	5	3.187	1.1354	20	12.750
1.0384	6	3.825	1.1427	21	13.387
1.0450	7	4.462	1.1501	22	14.025
1.0516	8	5.100	1.1585	23	14.662
1.0582	9	5.737	1.1659	24	15.300
1.0649	10	6.375	1.1738	25	15.938
1.0716	11	7.012	1.1817	26	16.574
1.0785	12	7.650	1.1898	27	17.211
1.0854	13	8.287	1.1980	28	17.848
1.0923	14	8.925	1.2063	29	18.486
1.0993	15	9.562	1.2146	30	19.125

TABLE XIX.—ELECTRIC CONDUCTIVITY OF $CuSO_4$ + 5 AQ. AND H_2O IN RECIPROCAL OHMS PER CENTIMETER

Grams H_2SO_4 per 100 c.c.		At 25° C.					At 45° C.				
		0	5	10	15	20	0	5	10	15	20
	Grams										
$CuSO_4$ + 5 aq., grams per 100 c.c.	0	.....	0.208	0.410	0.565	0.683	.....	0.246	0.492	0.683	0.839
	5	0.053	0.204	0.388	0.531	0.646	0.0205	0.242	0.461	0.643	0.791
	10	0.0221	0.195	0.350	0.500	0.600	0.0294	0.222	0.422	0.606	0.738
	15	0.0343	0.189	0.338	0.458	0.558	0.0468	0.217	0.381	0.545	0.690
	20	0.0423	0.182	0.319	0.433	.....	0.0574	0.212	0.378	0.521	0.643

TABLE XX.—CONVERSION TABLE

Percentage			Grams per 100 c.c.			Gram-equivalent per 1,000 c.c.
Cu	$CuSO_4$	$CuSO_4$+5 aq.	Cu	$CuSO_4$	$CuSO_4$+5 aq.	
1.00	2.5	3.91	1.04	2.56	4.0	0.321
2.00	5.0	7.82	2.09	5.25	8.2	0.658
3.99	10.0	15.64	4.41	11.05	17.4	1.387
5.99	15.0	23.46	6.97	17.50	27.4	2.194
6.98	17.5	27.37	8.37	22.00	32.9	2.631
H_2SO_4			H_2SO_4			H_2SO_4
5			5.15			1.05
10			10.7			2.18
15			16.5			3.38
20			22.8			4.66

Addition of $CuSO_4$ to H_2SO_4 increases the conductivity of the mixture if the H_2SO_4 is less than 3 g. per 100 c.c.; it decreases if the H_2SO_4 exceeds this amount. If the H_2SO_4 is just 3 g. per 100 c.c., the addition of a little $CuSO_4$ to the solution of H_2SO_4 has no effect upon the conductivity of the mixture.

Metallic Cu is precipitated from $CuSO_4$ solutions by Fe and other electropositive metals; Cu $(OH)_2$ by alkali and alkali earths; Cu_2S by H_2S, alkali, and alkali earth sulphides. Electrolytically, $CuSO_4$ is split into $Cu^{\cdot\cdot}$ and SO''_4; the e.m.f. required with an insoluble anode is 1.48 volts.

40. Cuprous chloride (Cu_2Cl_2: Cu 64.16 per cent; 63.5 Cu + 35.5 Cl = 99 CuCl + 35,400 cal.) occurs as nantokite. It is formed with some $CuCl_2$ by the action of Cl upon Cu at ordinary temperature; of HCl gas upon Cu at a dark red; of Cl upon Cu at a low temperature, and by heating $CuCl_2$ ($Cl + CuCl \rightleftarrows CuCl_2$); by boiling Cu in an acid solution of $CuCl_2$; by the reaction $3\,CuO + 2FeCl_2 = CuCl_2 + Cu_2Cl_2 + Fe_2O_3$. It is a white powder which is quickly darkened by the action of daylight, when moist, with the formation of $Cu_2O \cdot CuCl$. It melts at 434° C.; is volatile at 340° C.;[1] forms with Cu_2O an eutectic mixture;[2] heated with $Ca(OH)_2$ and C to the melting point of $CaCl_2$ + aq., it gives[3] $Cu_2 + CaCl_2 + H_2O + CO$.

The fused salt is a good conductor of electricity, its conductivity at 140° C. per cubic centimeter in reciprocal ohms is 0.2084 at 440°, and 0.3960 at 490°. It is insoluble in H_2O, soluble in HCl and metallic chloride solutions. The solubility in brine[4] is given in Table XXI.

TABLE XXI.—SOLUBILITY OF Cu_2Cl_2 IN BRINE

Solution of NaCl	Cu_2Cl_2 dissolved, per cent		
	At 90° C.	At 40° C.	
Saturated	16.9	11.9	8.9 per cent at 11° C.
15 per cent	10.3	6.0	3.6 per cent at 14° C.
5 per cent	2.6	1.1	

The electric conductivity of saturated solutions of Cu_2Cl_2 in brine determined by Thompson and Hamilton,[5] for the concentrations and temperatures shown in Table XXII, is plotted in Fig. 42. The curves *A* and *B* represent the conductivities of two acid $CuSO_4$ solutions; solution *A* contains 12.5 per cent

TABLE XXII.—SATURATED SOLUTIONS OF Cu_2Cl_2 IN BRINE AT DIFFERENT CONCENTRATIONS AND TEMPERATURES

Temperature, degrees C.	Saturated solutions of Cu_2Cl_2 in		
	I 15 g. NaCl in 100 g. H_2O	II 20 g. NaCl in 100 g. H_2O	III 30 g. NaCl in 100 g. H_2O
25	0.145	0.193	0.200
40	0.188	0.245	0.258
50	0.217	0.281	0.298

[1] KOTHNY, *Oesterr. Jahrb.*, 1910, LVIII, 141.

[2] TRUTHE, *Z. anorg. Chem.*, 1912, LXXVI, 161; *Rev. métal. Extr.*, 1913, X, 379.

[3] E. A. C. SMITH, 1913.

[4] COMEY, A. M., "Dictionary of Chemical Solubilities, Inorganic," Macmillan, London, 1896, p. 135.

[5] *Trans. Am. Electrochem. Soc.*, 1910, XVII, 287.

$CuSO_4 + 5$ aq. and 3.75 per cent free H_2SO_4, solution *B* 18.3 per cent salt and 9.2 per cent free acid.

Solutions of Cu_2Cl_2 in brine decompose metallic (Pb, Zn, Cd, Fe, Co, Bi, Sn) sulphides forming their chlorides and Cu_2S. Copper is precipitated from Cu_2Cl_2 solutions by Fe; by the electric current ($Cu^{\cdot} + Cl'$), when the deposition voltage[1] is 0.731; Cu_2S is precipitated by H_2S, by alkali and alkali earth sulphides; $Cu_2(OH)_2$ by $Ca(OH)_2$.

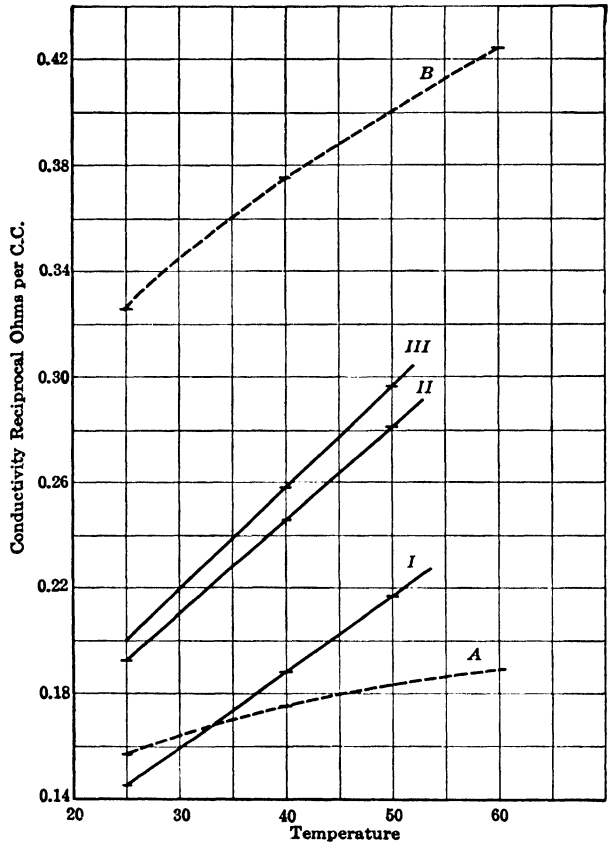

FIG. 42.—Conductivity of NaCl-solutions saturated with Cu_2Cl_2(I, II, III), and of $CuSO_4$-H_2SO_2 solutions (A, B).

41. **Cupric chloride** ($CuCl_2$: 47.22 per cent Cu; 63.6 Cu + 71 Cl_2 = 134.6 $CuCl_2$ + 51,400 cal., in dil. solution 62,500 cal.) does not occur as a mineral. The anhydrous salt is formed by the action of Cl upon Cu or CuCl, of HCl upon powdery $CuSO_4$, and of heat and NaCl upon $CuSO_4$. It is a brown to brownish-yellow powder, melts at 498° C., is changed at 340° C. with exclusion of air into CuCl + Cl, with access of air partly into CuCl + Cl, partly into CuO and Cl;[2] is deliquescent and becomes green. One hundred grams H_2O

[1] ABEGG, "Handbuch der anorganischen Chemie," pp. 419, 556.

[2] KOTHNY, *Oesterr. Jahrb.*, 1910, LVIII, 141.

dissolve at 0° C., 70.6 g. $CuCl_2$; at 17°, 75.6 g.; at 31.5°, 80.8 g.; at 91°, 104 g. The hydrous $CuCl_2 \cdot 2H_2O$ is formed by dissolving Cu in aqua regia, or CuO in HCl, by the reaction $2NaCl + CuSO_4 = Na_2SO_4 + CuCl_2$; the salt is light-blue, forming a greenish solution when concentrated. The solution has a decomposing effect upon metallic (Fe, Co, Zn, Cd, Pb,[1] Ni, Sn, As, Sb, Ag) sulphides, forming metallic chloride and Cu_xS; it is reduced to CuCl by H_2SO_3, *viz.*, $2CuCl_2 + H_2SO_3 + H_2O = Cu_2Cl_2 + 2HCl + 2H_2SO_4$ and by boiling with metallic copper, $CuCl_2 + Cu = Cu_2Cl_2$. The metal is precipitated by Fe, Hg, and Ag, which are converted into chlorides, and by FeO, converted into Fe_2O_3 and $FeCl_2$; the sulphide by CuS with the separation of S, and by Ag_2S with separation of S and formation of AgCl. KOH precipitates $Cu(OH)_2$; H_2S separates Cu_2S and S.

[1] HUNT, *Trans. A. I. M. E.*, 1881–82, x, 12.

CHAPTER VI

COPPER ORES

42. In General.—The minerals forming copper ores are quite numerous; they are classed as sulphide, oxide, and native, and form the basis of the classification of copper ores.[1]

43. Sulphide Copper Ores.—The sulphide minerals are: chalcocite (vitreous copper, copper glance), Cu_2S, 79.8 per cent Cu; covellite, CuS, 66.4 per cent Cu; bornite (peacock ore), $3Cu_2S \cdot Fe_2S_3$ or Cu_3FeS_3, 55.5 Cu, 16.4 Fe, 28.1 S (range 50 to 70 per cent Cu); enargite, $3Cu_2S \cdot As_2S_5$ or Cu_3AsS_4, 48.3 per cent Cu, 19.1 As, 32.6 S; chalcopyrite, $Cu_2S \cdot Fe_2S_3$ or $CuFeS_2$, 34.5 per cent Cu, 30.5 Fe, 35.0 S; tetrahedrite (gray copper, fahlore), $4RS \cdot Sb(As)_2S_3$, R $= Cu_2$, Fe, Zn, Ag_2, Hg_2, range 15 to 48 per cent Cu; 4 $Cu_2S \cdot Sb_2S_3$, 52.1 per cent Cu, 24.8 Sb, 23.1 S; tennantite, $4Cu_2S \cdot As_2S_3$, 57.5 per cent Cu, 17.0 As, 25.5 S; chalcantite (blue vitriol), $CuSO_4 + 5$ aq., 31.8 per cent CuO, 32.1 SO_3, 36.1 H_2O; 25.4 Cu. To this list must be added pyrite and marcasite, FeS_2, 53.4 per cent S, and pyrrhotite, Fe_nS_{n+1}, range $Fe_5S_6 - Fe_{16}S_{17}$, chiefly $Fe_{11}S_{12}$, 38.4 per cent S, both of which are frequently copper-bearing to the extent perhaps of 5 per cent through intermingled chalcocite, chalcopyrite, or sometimes tetrahedrite. A characteristic metallurgical difference[2] between pyrite and marcasite is that the latter is usually more free-burning and more easily vitriolized than the former.

The leading sulphide copper deposits in the United States are situated in Montana, Utah, Arizona, Nevada, California, and the Atlantic Coast beds.

The last[3] are massive pyrrhitous deposits, with from 2 to 5 per cent Cu, occurring in strata extending from Newfoundland to Alabama. The ore is generally first roasted in kilns of sulphuric acid plants before it is treated for copper.

In Montana,[4] in and around Butte, rich ores occur in shattered and altered granite. The copper minerals[5] are chalcocite, bornite, enargite, and pyrite; covellite, tetrahedrite, and chalcopyrite are subordinate. Up to 1900 chalcocite was the leading copper mineral; since then enargite became more prominent.

[1] WEED, W. H., "The Copper Mines of the World," McGraw-Hill Book Co., Inc., New York, 1907.

[2] BROWN, *Proc. Am. Phil. Soc.*, Philadelphia, 1894, XXXIII, 225; *Z. prakt. Geol.*, 1895, III, 180; STOKES, *Bull.* 186, U. S. Geol. Survey, 1901.

[3] KEMP, J. F., "Ore Deposits of the U. S. and Canada," New York, 1900, p. 185; WILSON, W. G., "Pyrites in Canada," Canada Dept. Mines, Ottawa, 1912.

[4] WEED, H. S., *Professional Paper*, No. 74, U. S. Geol. Survey, 1912; SALES, *Trans. A. I. M. E.*, 1913, XLVI, 3.

[5] GOODALE, *Trans. A. I. M. E.*, 1896, XXVI, 599; GOODALE and KLEPINGER, 1913, XLVI; BARD and GIDEL, *op. cit.*, 1913, XLVI, 123.

The ore averaged in 1911[1] Cu 3.2, SiO_2 55, Fe 10 per cent; 0.0071 oz. Au, 2.20 oz. Ag per ton; there is present 0.01 oz. Te per pound of Cu. The ore was formerly graded as *first class*, about 26 per cent of the product (with Cu 4 to 5, SiO_2 51.2, Fe 13.6, S 17.3, Al_2O_3 8.1, CaO 0.30 per cent, Ag 2.0 and Au 0.015 oz. per ton)[2] which went straight to the blast furnace; and *second class*, the remaining 74 per cent (with SiO_2 58.5, Fe 9.4, S 11.6, Al_2O_3 11.7, CaO 0.10 per cent, Ag 1.26 and Au 0.008 oz. per ton), which went to concentrating mills, furnishing a concentrate which was roasted and then smelted in reverberatory furnaces. At present all ore is concentrated and treated in reverberatory furnaces.

The ores of Bingham, Utah,[3] and northern Nevada[4] are finely divided chalcocite and chalcopyrite disseminated through porphyry. Utah ores contain about Cu 2.5, Fe 40, SiO_2 25, CaO 4 per cent, 0.015 oz. Au and 0.15 oz. Ag per ton; Nevada ores 1.2 to 2 per cent Cu, 0.01 to 0.02 oz. Au and 0.3 to 1 oz. Ag per ton. The ore of the Nevada Consolidated Copper Co. in 1911[5] assayed Cu 1.80 per cent, Au 0.013, and Ag 0.079 oz. per ton. The ores are concentrated to a product assaying about 30 per cent Cu, 25 Fe, 32 SiO_2. Similar ores occur in Arizona.

The leading deposits of California are those of Shasta County,[6] where the ore consisting of pyrite with chalcopyrite and blende, averaging 3.77 per cent Cu and $1.99 Ag Au, occurs in a granite porphyry. Partial pyritic smelting is practiced in the district.

44. Oxide Ores.—The oxide minerals are: cuprite (red oxide of copper), Cu_2O, 88.8 per cent Cu; tenorite (melaconite, black oxide of copper), CuO, 79.8 per cent Cu; malachite, $CuCO_3 \cdot Cu(OH)_2$, 57.3 per cent Cu; azurite, $2CuCO_3 \cdot Cu(OH)_2$, 55.1 per cent Cu; chrysocolla, $CuSiO_3 + 2H_2O$, 37.9 per cent Cu, 34.3 SiO_2; atacamite, $CuCl_2 \cdot 3Cu(OH)_2$, 59.4 per cent Cu, 16.6 Cl; brochantite, $CuSO_4 \cdot 3Cu(OH)_2$, SO_3 17.7 per cent, CuO 70.3 (= Cu 56.1), H_2O 12.0 (Chile). These ores used to occur abundantly in the Southwest,[7] especially in southeastern Arizona, in limestone and disseminated through eruptive rock. A large part of the ore has changed into sulphide and grown less rich, so that in 1908 it averaged 4.36 per cent Cu. The Bisbee ore averaged in 1911: Cu 5.9 per cent, Au 0.0308 oz., and Ag 1.49 oz. per ton;[8] the Morenci

[1] *Min. Res.*, U. S. Geol. Survey, 1911, I, 295.

[2] GOODALE, *Trans. A. I. M. E.*, 1913, XLVI, 568.

[3] BOUTWELL, *Professional Paper*, U. S. Geol. Survey, 38, 1905.

[4] LAWSON, *Bull.* 4, Dept. Geol. Univ. Cal., p. 284.

[5] *Min. Res.*, U. S. Geol. Survey, 911, I, 298.

[6] DILLER, *Bull.* 213, U. S. Geol. Survey, 1903, pp. 123–132; 1904, pp. 169 to 179; GRATON, *Bull.* 430, 1910, p. 71.

[7] WENDT, *Trans. A. I. M. E.*, 1886–87, XV, 25; Globe district: RANSOME, *Professional Paper*, No. 12; U. S. Geol. Survey, 1903; Bisbee district: RANSOME, *Professional Paper*, No. 21, U. S. Geol. Survey, 1904; Morenci district: LINDGREN, *Professional Paper*, No. 43, U. S. Geol. Survey, 1905; Jerome district: LINDGREN and GRATON, *Bull.* 285, U. S. Geol. Survey, 1906, p. 81.

[8] *Min. Res.*, U. S. Geol. Survey, 1911, I, 279.

district 3.116 per cent Cu. Sulphide ore of higher grade, with about 16 per cent Cu, is smelted raw; that of lower grade, 2+ per cent Cu, is first concentrated to a product with about 16 per cent Cu and 30 per cent SiO_2; remaining oxide ore is usually smelted with sulphide or, if low-grade, is leached.

45. Native copper occurs in the Upper Peninsula of Michigan[1] disseminated through amygdaloid and conglomerate beds of eruptive rocks; the rock assays 0.5 to 1.5 and averages 1.01 per cent Cu, and is concentrated to 65 to 85 per cent Cu and then smelted in reverberatory furnaces. Native copper is very pure,[2] containing 99.92 per cent Cu with small amounts of Ag and Fe, perhaps some traces of Ni and As.

46. Marketing.—In marketing copper ores[3] no general standards exist, as is, *e.g.*, the case with Pb and Fe ores, because mine and smelter usually belong to the same company. Pyritic ores of the Atlantic Coast, used for the manufacture of H_2SO_4, are rated for the S they contain (not <37 per cent) in addition to their Cu contents, and according to size. As regards the latter, there are three classes: lump ore, 8 in. and over; broken, 3 to ¾ in.; and smalls, under ¼ in.

47. Metallurgical Treatment in General.[4]—Copper may be extracted from its ore by pyro-, hydro-, and electrometallurgical processes. The method chosen will depend upon the character of the copper mineral (sulphide, oxide, native) and the gangue, the copper content of the ore, and the cost of labor, fuel, and material. Smelting is practiced with rich and medium-grade ore, because the fuel, the leading expense, increases with the amount of gangue present, which has to be converted into slag. Leaching is in place with low-grade ore, the gangue of which is not attacked by the solvent, as the amounts of fuel, solvent, and precipitant required are small and the percentage of extraction high; and with intermediary products, such as impure matte or copper containing precious metal. Direct electrolytic processes have so far been a failure with ore, and a partial success with matte, and have become the standard method for treating metallic copper containing precious metal. The copper obtained by smelting and precipitating on iron from leaching solutions is impure and has to be fire-refined; that from electrolytic processes is usually too brittle to be used as such and has to undergo a similar fire-refining process.

[1] IRVING, *Monograph V.*, U. S. Geol. Survey; *Geol. Survey of Mich.*, vols. V and VI; RICKARD, T. A., "The Copper Mines of Lake Superior," McGraw-Hill Book Co., Inc., New York, 1905.

[2] DOUGLAS, *Mineral Ind.*, 1894, III, 243.

[3] BARBOUR, *Eng. Mining J.*, 1911, XCII, 314.

[4] General review: KERL, *Berg. Hüttenm. Z.*, 1892, LI, 375; Review of recent progress: CROASDALE, *Pacific Coast Miner*, 1903, VII, 471.

CHAPTER VII

SMELTING OF COPPER

48. Smelting of Copper Ore in General.—The minerals forming copper ores were classed in §42 under the heads of sulphide, oxide, and native. The smelting of the ore, which is governed by the character of the copper-bearing mineral, differs accordingly; hence the whole subject is best treated under the four heads: "Smelting Sulphide," "Smelting Oxide," "Smelting Native Copper Ores," and "Fire Refining of Copper."

A. SMELTING SULPHIDE COPPER ORE

49. Smelting Sulphide Copper Ore in General.—Metallurgically considered, sulphide copper ores consist mainly of CuS, FeS, and gangue, and the aim of smelting is to separate Cu from Fe, S, and gangue. The smelting is based upon the strong affinity of Cu for S[1] and its weak affinity for O in comparison with Fe and the other base metals of the ore, as well as upon the fact that Cu_2S and Cu_2O will react upon one another, giving Cu and SO_2.

If an ore rich in S is partially roasted and then subjected to a reducing fusion, be the reducing agent C, CO, or S, the gangue will form a slag. Of the metals, Cu will first unite with the S necessary to form the stable Cu_2S, then the Fe, not taken up by the SiO_2, will combine with S to form FeS, and subsequently the heavy metals will combine as long as there is S present, in the order of their affinities. The sulphides form a heavy matte which readily separates from the lighter slag, a mixture of silicates of FeO, MnO, CaO, MgO, BaO, Al_2O_3, etc. A variety of roasting apparatus exists (§55). Smelting is carried on in the blast furnace and the reverberatory furnace; electrothermic[2] methods, with the exception of one plant in Norway, have not proved sufficiently economical to be adopted. The blast furnace has been displaced by the reverberatory furnace in many plants for several reasons. The principal reason is the diminishing supply of coarse high-grade ore and the consequent increasing use of concentration processes. Although concentrates have been smelted directly in blast furnaces, the practice is not recommended and it is usually considered better practice to use the reverberatory furnace rather than agglomerate the concentrates and smelt them in the blast furnace.

In blast-furnace smelting the two operations of roasting and smelting may be carried on together by the so-called pyritic process, a fusion in a strongly

[1] HOFMAN, "General Metallurgy," 1913, p. 74 (sulphides).

[2] VATTIER, *Berg. Hüttenm. Z.*, 1903, LXII, 549; WOLKOW, *Metallurgie*, 1910, VII, 99; LADD, *Met. Chem. Eng.*, 1910, VIII, 7; SCHILOWSKI, *Metallurgie*, 1910, VII, 99, 151, 435; 1911, VIII, 617; *Eng. Mining J.*, 1912, XCIV, 504; STEPHAN, *Metall u. Erz.*, 1912–13, X, 11; LYON and KEENEY, *Trans. A. I. M. E.*, 1913, XLVII (a general review of subject).

oxidizing atmosphere. There are two ways of bringing forward to metallic copper the matte produced in ore smelting:

1. By a series of oxidizing roasts, each followed by a reducing fusion, the aim being to expel the electronegative components of the matte (S, As, Sb), and to slag the electropositive in the order of their affinities for O, until copper is finally obtained in the metallic state. The roasts are carried on in suitable apparatus, and the fusions sometimes in blast furnaces, but more commonly in reverberatory furnaces. This method has become obsolete in the United States.

2. By converting, *i.e.*, forcing compressed air through molten matte held, at the right temperature, in a suitable vessel whereby oxidation by O and reduction by S go on simultaneously until Cu_2S and an irony slag are obtained, when, after pouring off the slag, the remaining S is expelled and metallic copper obtained. Low-grade matte may be brought forward to converting grade by partial pyritic smelting in the blast furnace.

The outline shows that several operations are necessary for the extraction of Cu from sulphide ore by smelting. The recovery cannot be economically accomplished by a dead-roast followed by a single fusion, as it would be difficult to collect all the reduced Cu, especially in case of low-grade ores, and as the recovered Cu would be very impure, containing excessive amounts of Fe, beside much As and Sb.

50. Smelting Sulphide Copper Ore in the Blast Furnace in General.—Three processes have to be distinguished, all of which aim to produce matte and slag.

1. *The roasting and reduction process*, also called "German" or "Swedish" process. The raw ore is subjected to an oxidizing roast, and the partially roasted ore is smelted in the blast furnace with much coke to furnish the necessary heat and reducing agent.

2. *The pyritic process*, also called "American" process. The raw ore is smelted in the blast furnace without carbonaceous fuel in an oxidizing atmosphere, the oxidation of Fe and S, and the slag formation, furnishing the necessary heat.

3. *The partial pyritic process*, a modification of (2), in which a lack of heat is made up by charging a small amount of fuel with the ore.

The roasting and reduction process, the oldest of the three, has been replaced by the pyritic processes whenever the character of the ore makes this possible. The requirements which an ore has to fulfil to permit pyritic smelting are so strict that smelting without any fuel whatever is the exception, but partial pyritic smelting, in the United States at least, is common where blast furnaces are used. The pyritic processes will be discussed together after the discussion of roasting and reduction process.

51. The Roasting and Reduction Process.—The operations are roasting of raw ore, smelting of roasted ore in the blast furnace for matte and slag, roasting of matte, smelting of roasted matte in the blast furnace for impure, so-called black, copper, and slag. Smelting roasted matte for black copper is no longer practiced in American plants.

I. Roasting

52. Roasting Sulphide Copper Ore.—The object of roasting is to oxidize S and Fe, and to remove volatile impurities, such as As, Sb, and Bi. The degree to which a roast is to be carried depends upon the percentages of S, Cu, and Fe, and the amount of impurity present. An ore rich in Cu will require less roasting than one which is poor for the production of matte with a given copper content. As regards impurities, the larger the amount of S present, and the slower and more prolonged the roast, the greater will be their elimination. Thus Gibb[1] found that in a cuprous pyrite with Cu 5.55, As 1.18, Sb 0.035, Bi 0.011 per cent, roasted in a heap, there was eliminated As 75.1, Sb 25.4, Bi 27.8 per cent; Wendt[2] roasting a similar ore with Cu 5.15, As 1.30, Sb 1.45, S 32.35, Fe 29.36 per cent, in a kiln,[3] the roasted ore having lost about 20 per cent in weight, gave the following losses: As 97, Sb 86, S 72 per cent. In roasting a concentrate of chalcopyrite and pyrite with some bornite and chalcocite in a reverberatory furnace, Gibb[4] found the expulsions to be As 61.2, Sb 18.8, Bi 11.3 per cent. In special cases, the roast may be purposely carried so far that in the subsequent reducing fusion there will not be enough S present to cover all the Cu, with the result that there will be formed some metallic copper which will carry down with it impurities, such as As, Sb, Bi, etc., to be refined by special processes, and a matte correspondingly cleaned. The general discussion of the behavior of metallic sulphides in an oxidizing roast, both in powder and lump form, is given elsewhere.[5]

53. Behavior of Cu, Fe, and Mn Sulphides in Powder Form. 1. *Cu_2S (Chalcocite).*—The changes chalcocite undergoes in an oxidizing roast are generally stated to be as follows: $Cu_2S + 3O = Cu_2O + SO_2$, $Cu_2O + SO_2 + O \rightleftarrows 2CuO + SO_3$, $CuO + SO_3 \rightleftarrows CuSO_4$. Aubell's[6] laboratory experiments with prepared finely divided Cu_2S show that roasting starts at 200° C. with the reaction $2Cu_2S + 5O_2 = 2CuO + 2CuSO_4$, and continues up to 330°; above this temperature the reaction $Cu_2S + O_2 = 2CuO + SO_2$ begins; up to 550° more than half of the sulphide S is converted into sulphate S. The SO_3, formed by the dissociation of $CuSO_4$, acts oxidizingly, $Cu_2S + 3SO_3 = Cu_2O + 4SO_2$ and $Cu_2O + SO_3 = 2CuO + SO_2$. As long as the roasting ore contains Cu_2S, there will be formed Cu_2O, so that, after all the S has been expelled, the roasted ore may retain as much as 30 per cent Cu_2O, which has to be converted into CuO by air at a temperature below 1,069° C.

Chalcocite[7] ignites in air in the range of 430 and 697° C. according to the size of grain, 0.1 — > 0.2 mm.; it does not decrepitate. That Cu_2S shows a

[1] *Trans. A. I. M. E.*, 1903, XXXIII, 654.
[2] *Op. cit.*, 1890–91, XIX, 100.
[3] Gmehling, *Oesterr. Z. Berg. Hüttenw.*, 1890, XXXVIII, 272 (details and drawings).
[4] *Loc. cit.*
[5] Hofman, "General Metallurgy," 1913, p. 403.
[6] *Oesterr. Jahrb.*, 1910, LVIII, 131.
[7] Friedrich, *Metallurgie*, 1909, VI, 1691.

tendency to sinter while roasting, as stated by Plattner,[1] cannot be due to the fusion of Cu_2S, as its melting point lies at 1,127 to 1,130° C.; the sintering he did observe must have been due to some other cause, perhaps the formation of an oxysulphide. In a laboratory sulphatizing roast carried on between 420 and 440° C., Warlimont[2] succeeded in rendering 52.5 per cent of the Cu water-soluble.

2. *CuS* (*Covellite*).—As CuS gives up one molecule of S when brought to a bright red with exclusion of air, and is converted into Cu_2S, its behavior in roasting should be similar to that of Cu_2S.

3. *FeS* (*Pyrrhotite*, $Fe_{11}S_{12}$).—The changes FeS undergoes may be expressed according to Plattner's outline by $FeS + 3O = FeO + SO_2$, $3FeO + O = Fe_3O_4$, and $SO_2 + O +$ catalyzer $= SO_3$; $2Fe_3O_4 + SO_3 = 3Fe_2O_3 + SO_2$ and $FeO + SO_3 = FeSO_4$; $2FeSO_4 +$ heat $= Fe_2SO_6 + SO_2$ and $Fe_2SO_6 +$ heat $= Fe_2O_3 + SO_3$. According to Kothny,[3] heating $FeSO_4$ in a current of CO_2 at 280° C. causes it to be converted into $Fe_2O_3 \cdot SO_3 + SO_2$ up to 530° C., when the basic ferric sulphate is dissociated into Fe_2O_3 and SO_3. Heating in a current of air gives rise to the reaction $4FeSO_4 + O_2 = 2(Fe_2O_3 \cdot 2SO_3)$ within a temperature range of 150 and 380° C. Between 380 and 530° some SO_2 is set free; above 530° decomposition again sets in. The oxidation of FeS may progress more directly than shown above, as seen by the equations $4FeS + 7O_2 = 2Fe_2O_3 + 4SO_2$ and $FeS + 2O_2 = FeSO_4$. In roasting there has to be considered also the oxidation of FeS by $3SO_3$ to FeO and $4SO_2$. Pure FeS ignites in air at from 325 (0.1-mm. grain) to 472° C. (>0.2-mm. grain), pyrrhotite at from 430 to 590°. The former does not decrepitate; the latter does somewhat.[4] Kothny[5] found that finely divided prepared FeS begins to oxidize to $FeSO_4$ at 170° C., continues to do this up to 430°, when mainly Fe_2O_3 and SO_2 are formed accompanied by some $FeSO_4$. In fact, the presence of $FeSO_4$ is noticeable up to 600° C. In a laboratory sulphatizing roast, Warlimont[6] rendered in 5 hr. 31.8 per cent of the Fe water-soluble.

4. *$Cu_2S \cdot Fe_2S_3$* (*Chalcopyrite*).—The general behavior is similar to that of pyrrhotite except that, beside Fe_xO_y and $FeSO_4$, Cu_xO_y and $CuSO_4$ are formed; the formation of water-soluble $CuSO_4$ is greatly assisted by the presence of Fe_xS. Thus, Warlimont[7] succeeded in rendering 97.7 per cent Cu water-soluble with a mixture of $1Cu_2S:10FeS$. Similar extractions were obtained by Wedge.[8] Chalcopyrite decrepitates upon heating.

5. *FeS_2* (*Pyrite*).—If heated to 700° C. with exclusion of air, the reaction $2FeS_2 +$ heat $= 2FeS + S_2$ takes place, the product resembling the magnetic

[1] "Röstprocesse," p. 79.

[2] *Metallurgie*, 1909, VI, 132.

[3] *Oesterr. Jahrb.*, 1910, LVIII, 112; *Metallurgie*, 1911, VIII, 389.

[4] FRIEDRICH, *loc. cit.*

[5] *Loc. cit.*

[6] *Loc. cit.*

[7] *Loc. cit.*

[8] *Eighth Internat. Congress of Appl. Chem.*, 1912, III, 151; *Trans. A. I. M. E.*, 1912, XLIV, 818 (in large-scale work with his roasting kiln (§§69, 214)).

sulphide;[1] however, the expulsion of S begins at 200°.[2] According to Friedrich,[3] pyrite from Elba heated in air gives off SO_2 at 405° C. and glows at 533° C.; the more free-burning mineral from Rio Tinto begins to roast at from 260 to 275° C.[4] Kothny's[5] experiments show that 250° C. is the lowest roasting temperature. Pyrite from some localities decrepitates readily; from others it does not; the latter brings a higher price. FeS_2 is more readily roasted than FeS, as the expulsion of S by distillation makes the mineral porous, and as the larger amount of SO_3 formed exerts its strongly oxidizing influence. Assuming that no S is distilled, the complete oxidation of FeS_2, as formulated by Waring,[6] is expressed by $4FeS_2 + 11O_2 = 2Fe_2O_3 + 8SO_2$; the formation of Fe_3O_4 with a short supply of air, by $FeS_2 + O_2 + FeS + SO_2$ and $FeS + 10Fe_2O_3 = 7Fe_3O_4 + SO_2$. The experiments of Kothny[7] have shown that between 250 and 290° C. the oxidation of FeS_2 takes place according to $FeS_2 + 3O_2 = FeSO_4 + SO_2$, and between 290 and 500° C. according to $4FeS_2 + 11O_2 = 2Fe_2O_3 + 8SO_2$ when the FeS_2 kindles. Oxidation to $FeSO_4$ is, however, noticeable up to 600° C. He also showed that the reactions $FeS_2 + 5Fe_2O_3 = 11FeO + 2SO_2$ and $FeS_2 + 16Fe_2O_3 = 11Fe_3O_4 + 2SO_2$ do occur, beginning at 380° C. and requiring that for 1 molecule of FeS_2 there be present 16 molecules of Fe_2O_3.

6. *MnS* (*Alabandite*).—This compound, which melts at 1,162° C.,[8] is converted by roasting into $MnSO_4$ and Mn_3O_4. The $MnSO_4$ begins to give off SO_3 at 699° C.; the dissociation[9] into Mn_3O_4, SO_3, SO_2, and O is energetic at 790°. Friedrich[10] found that alabandite with 2.02 and 1.98 per cent Fe, when 0.1 mm. fine, ignited at 355° C.; when coarser than 0.2 mm., at 700° C.; the mineral did not decrepitate.

54. Behavior of Fe, Cu, and Mn Sulphides in Lump Form. *Kernel Roasting.* In roasting a sulphide copper ore or matte in lump form, the oxidation will start at the surface of a lump, when this has been brought to the kindling temperature, and then penetrate toward the center at a speed governed by the heat evolved, which causes the lump to swell, become porous, and crack, and thus furnish channels for the travel of the air. In time the surface will become covered with a rind or shell of more or less porous Fe_3O_4 and Fe_2O_3, through which finally the air cannot penetrate sufficiently to complete the oxidation. This is effected by SO_3, *viz.*, $SO_3 + \text{Met. S} = SO_2 + \text{Met. O}$; but part of the SO_2 is decomposed, $3SO_2 = S + 2SO_3$, setting free S vapor, which, traveling toward the

[1] VALENTINE, *Trans. A. I. M. E.*, 1889–90, XVIII, 78; GEODEL, *J. für Gasbeleuchtung*, 1905, XLVIII, 400; FRIEDRICH, *Stahl u. Eisen*, 1911, XXXI, 2040; BARTH, *Metallurgie*, 1912, IX, 204 (600° C.).

[2] KOTHNY, *loc. cit.*; BARTH, *loc. cit.* (350° C.).

[3] *Loc. cit.*

[4] CHALON, *Rev. Un. Min.*, 1902, LVII, 201.

[5] *Loc. cit.*

[6] *Mining Mag.*, 1905, XII, 196.

[7] *Loc. cit.*

[8] FAY, *Proc. Am. Soc. Testing Materials*, 1908, VIII, 92.

[9] HOFMAN and WANJUKOW, *Trans. A. I. M. E.*, 1912, XLIII, 548.

[10] *Metallurgie*, 1910, VII, 329.

cooler center of a lump, is likely to cause the formation of a kernel of sulphide. If the ore is low in Cu, the S in a roasted lump may have been almost completely expelled, and the Cu converted into CuO, only a small part retaining the transitional forms of Cu_2O and $CuSO_4$. If the ore is rich in Cu, the roasted lump may contain some metallic Cu formed by $2Cu_2O + Cu_2S = 6Cu + SO_2$ and by $3Cu_2O + FeS = 6Cu + FeO + SO_2$. If the ore contains some Ag_2S, the silver in the roasted lump will be present as Ag_2SO_4 or Ag, the latter having been formed by $Ag_2S + 2O = 2Ag + SO_2$ or by $Ag_2SO_4 + Ag_2S = 4Ag + 2SO_2$,[1] and not by decomposition of Ag_2SO_4, which takes place at 925° C.[2]

A special form of roasting copper ore in lump form is kernel roasting,[3] whereby the small quantity of Cu in a low-grade pyritic ore is concentrated in the center of the lump as a kernel of sulphide, which thus becomes rich, while the surrounding shell or rind, converted into a mixture of Fe_3O_4 and Fe_2O_3, is correspondingly impoverished, retaining small quantities of copper as $CuSO_4$ and Cu_xO. Edwards[4] has noted an enrichment of the rind in Ag; a similar phenomenon was observed by Plattner[5] with matte, whether lead-bearing or not.

Figures 43 to 45 show three characteristic stages in heap- or stall-roasted copper-bearing pyritic ore of suitable size and character. Lürzer[6] shows a very high degree of concentration in the following analyses:

Crude ore, Cu 1.60, Fe 43.50, S 50.25, SiO_2 5.00 per cent.

Pure kernel, Cu 41.64, Fe 28. 76, S 29.28, SiO_2 0 08 per cent.

Rind next to kernel, Cu 3.31, S 0.92, SiO_2 2.85, CuO 1.58, Fe 0.10, Fe_2O_3 85.70, SO_3 2.50, ignition loss 3.04 per cent.

Concentration[7] of ore with 3 to 4 per cent Cu into kernels with 15 to 20 per cent Cu and rinds with 2 per cent Cu was common at Fahlun. At Agordo,[8] ore with 2 per cent Cu gave 13 per cent kernels with 6 per cent Cu, and 87 per cent rinds with 1.28 per cent Cu (calculated). Schnabel[9] gives from his work in the Caucasus a concentration of Cu, from ore with 7 to 10 per cent Cu, into kernels with 35 to 40 per cent Cu, the rinds assaying 3 to 4 per cent Cu, of which 2½ to 3 parts were $CuSO_4$ and ½ to 1 part CuO. This concentration of Cu toward the center has been attributed by Plattner[10] to Cu_2S becoming liquefied and being drawn toward the center. Cu_2S melts at 1,127 to 1,130° C., a temperature not reached in a heap- or stall-roast. Schertel[11] thinks it a process of adhesion and not one of fusion. Considering that the kernel at the end of the roast is a mixture of Cu_2S and FeS, it may be that, instead of Cu_2S, the eutectic (see matte,

[1] SACKUR, *Ber. deutsch. chem. Ges.*, 1908, XLI, 3356.
[2] HOFMAN and WANJUKOW, *loc. cit.*
[3] PETERS, *Min. Res.*, U. S. Geol. Survey, 1882, p. 287.
[4] *Eng. Mining J.*, 1895, LIX, 411.
[5] "Röstprocesse," pp. 183, 205.
[6] *Tunner's Jahrb.*, 1853, III, 339.
[7] BREDBERG, *Erdmann's J. Technisch-Oekonomische Chem.*, 1829, IV, 300.
[8] EGLESTON, *School Mines Quart.*, 1887–88, IX, 124.
[9] SCHNABEL-LOUIS, "Handbook of Metallurgy," 1905, I, 39.
[10] "Röstprocesse," p. 195.
[11] *Dinglers polytech. J.*, 1872, CCVI, 284.

a. Crust of ferric oxide.
b. Layer of enriched sulphide (chalcopyrite).
c. Unaltered center.

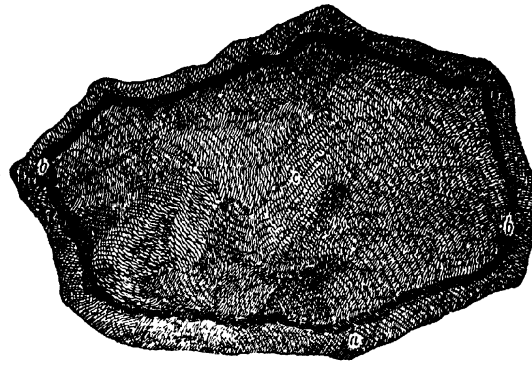

FIG. 43.—Roasted for a short time.

a. Crust of ferric oxide.
b. Layer of enriched sulphide (bornite).
c. Layer of enriched sulphide (bornite).
d. Layer of enriched sulphide (chalcopyrite).
e. Unaltered center.

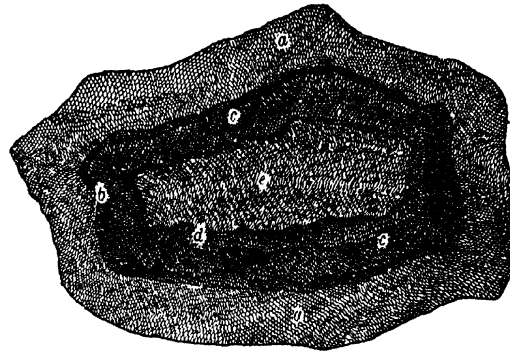

FIG. 44.—Roasted for a longer time.

a. Crust of ferric oxide usually much cracked.
b. Kernel of enriched sulphide.

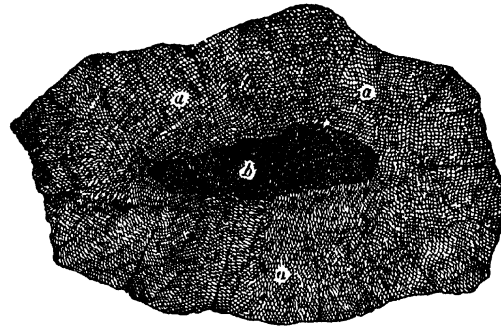

FIG. 45.—Final stage of roast.

FIGS. 43–45.—Three stages in kernel-roast of pyritic copper ore (Plattner).

§100) of the two components, which melts below 950° C., travels inward. Another theory is that of Poole,[1] who states that S, which thickens when heated for some time to above its melting point, forms a very thin liquid when finely divided Cu_2S or FeS is stirred into it, and suggests that this thin liquid travels toward the center. The latest theory is one by Friedrich,[2] who bases it on the experimental fact observed by Schenck and Hempelmann[3] that heating a mixture of $CuSO_4$ and Cu_2S to a temperature lying between 300 and 400° C. causes the formation of a viscous brownish fluid. He believes that the essential point, the fusion of Cu_2S at a very low temperature, is satisfactorily explained.

Presupposing the existence of a plastic or fluid substance, there remains to be given an explanation of the cause for the inward travel from the bottom upward and from the side inward. Howe[4] suggests that capillary attraction causes the plastic part to adhere to the solid; McRoss[5] and Austin[6] suggest magnetic attraction on account of the plastic mass becoming not only magnetizable, but magnetic; Knapp[7] and Roberts-Austen[8] suggest diffusion which might be active without any fusion whatever. There is no reason why the three forces should not supplement one another. The suggestions of H.G.Z.[9] of an outward movement of FeS, and of Edwards[10] of an inward movement of CuO, do not appear reasonable.

A successful kernel roast[11] requires a copper-bearing pyrite of, say, 4 in. in diameter that does not decrepitate upon heating and is nearly free from gangue, and a slow roast at a regulated low temperature. It is carried on in heaps and stalls. The oxidation of a lump begins at the surface, the heat generated sublimes some of the S, which protects Cu_2S from oxidation; the Cu_2S alone or with some FeS travels inward while the excess FeS is oxidized by the action of air or SO_3. In ordinary heap- or stall-roasts, the limiting size for lump ore is a 3-in. ring, as with larger pieces there is a tendency to the formation of kernels, a condition which is usually avoided as much as possible.

55. Roasting Apparatus in General.—The roasting of copper ores may be carried on in heaps, stalls, in shaft, reverberatory, and muffle furnaces, and in blast-roasting apparatus, but in modern roasting, except where special conditions call for a muffle furnace, the multiple-hearth mechanical furnace is generally used. Blast roasting has special application in preparing ores for the blast furnace. The roaster gases from heaps, stalls, and reverberatory furnaces contain under 1 per cent SO_2 and are contaminated with fuel gases; hence they

[1] *Trans. A. I. M. E.*, 1906, XXXVI, 403.
[2] *Metall u. Erz*, 1914, XI, 9.
[3] *Op. cit.*, 1913, X, 293.
[4] *Eng. Mining J.*, 1895, LIX, 104, 267, 364.
[5] *Op. cit.*, pp. 195, 339.
[6] *Min. and Meth.*, 1911, II, 119.
[7] *Eng. Mining J.*, 1895, LIX, 339.
[8] "Introduction to the Study of Metallurgy," 1910, 55.
[9] *Eng. Mining J.*, 1895, LIX, 147.
[10] *Op. cit.*, p. 411.
[11] HOWE, *op. cit.*, 1895, LIX, 104–267.

cannot be economically utilized.[1] Those from shaft and muffle furnaces contain over 4 per cent SO_2[2] and are free from fuel gases; they can be converted into H_2SO_3, H_2SO_4, or SO_3. The SO_2 content from intermittent blast-roasting apparatus varies considerably; usually the gases go to waste; in some instances several pots are run in series in such a manner as to furnish a roaster gas of uniform grade with over 4 per cent SO_2. From the continuous blast roaster of von Schlippenbach[3] the sulphurous gas was utilized in the manufacture of H_2SO_4.

The choice of furnace is governed by the chemical composition (mainly percentage of S and Fe), physical character (coarse or fine), and the value of the ore (percentage of Cu, Ag, Au), or the time that can be given to the roasting. It is further influenced by the degree of desulphurization that is demanded, by the practicability of recovering the sulphurous gases or the necessity of rendering them harmless, by the tonnage to be treated, the cost of plant, and, lastly, by the price of labor, fuel, and material.

56. Roasting in Heaps, Stalls, and Shaft Furnaces.—A study of the history of roasting would not be complete without referring to these processes which were once important in the copper industry. Heap roasting was practiced until recently in several places and is still used at Sudbury, Ont., but the gases were destructive to vegetation and otherwise offensive, so the process has given way in most places to more modern methods and will probably soon be extinct. Stall and shaft furnaces are of low capacity, inefficient, and high in final cost of operation and are of no importance today. Only a brief description of these processes will be given in the present edition of this treatise, but they may be found more fully described in the first edition.

1. *Roasting in Heaps.*[4]—Since the advent of partial pyritic smelting, this method of roasting has lost much of its former importance. It is suited for coarse ore with an admixture of only a small amount of fines; and consists in piling the ore to the form of a truncated pyramid onto a bed of wood on suitable ground, and igniting the fuel, which heats the superincumbent ore and starts the roasting. If the ore contains sufficient S to keep up combustion, the process of roasting will proceed of its own accord; if not, the lack has to be made up by mixing in fuel (coke or coal fines, refuse wood, etc.). Ores containing less than 15 per cent S require intermixing of fuel.

(*a*) The Roast Yard.—The location of the roast yard has to be so chosen that the heaps are protected from strong winds, and that the prevailing wind carries the gases away from the works. Ore heaps are rarely covered by sheds, as is often the case with the more valuable matte heaps. In order to have a cheap roast, it is essential that there be as little handling as possible of raw and roasted ore; special provision has to be made for this.

[1] HOFMAN, "General Metallurgy," 1913, p. 880.

[2] HOFMAN, *op. cit.*, p. 881.

[3] HOFMAN, *Mineral Ind.*, 1910, XLI, 761; KROUPA, *Oesterr. Z. Berg. Hüttenw.*, 1912, XL, 539.

[4] PETERS, *Min. Res.*, U. S. Geol. Survey, 1882, 283; 1883–84, 283; "Modern Copper Smelting," New York, 1895, p. 104; GLENN, *Eng. Mining J.* 1883, XXXVI, 392; WENDT, *School Mines Quart.*, 1885–86, VII, 154, 281, 301.

One of the simplest arrangements of roast yard is that formerly in operation at the Vershire copper mines, near Corinth, Vt. The ore is brought in side-dump cars on a trestle at an elevation of from 10 to 12 ft. across the places where the heaps are to be erected; the trestle carries T-rails and has a slight grade, from ¾ to 1 per cent. Parallel with the upper track and about 4 ft. below the level of the yard is a second track over which the roasted ore is run to the feed floor of the blast furnace, the tops of the cars being on a level with the floor of the yard. Similar permanent plants are those given by Peters,[1] and the more complicated arrangement of the Tyee Copper Co., Ladysmith, B. C., with Kiddie movable bridges.[2]

At Keswick, Cal.,[3] the ore was deliverd in 10- to 20-ton cars to bunkers of 150 tons capacity closed with grizzlies (3-in. slots); beneath was another set of screens with 1- to ¾-in. holes, thus furnishing coarse, medium, and fine ore, which dropped into separate cars of 2,500-lb. capacity. The cars, with 18-in. gage, were run on 16-lb. rails, which were spiked to 4- by 4-in. ties laid across 6-by 8-in. stringers, 16 ft. long, connecting the bents 10 to 12 ft. above the roast yard. The bents of a trestle were made of round poles, 4 to 6 in. in diameter at the small ends. When a heap was erected, the rails, stringers, and ties were removed to be used in another heap, while the poles were left in place, the cost of extracting them being greater than their value.

At the works of the Canadian Copper Co., Copper Cliff, Ont., the roast yard has a capacity of 100,000 tons. In building a heap, the ore is wheeled from a flat car and spread, the base of the heap being 1 to 2 ft. distant from the track. The roasted ore is loaded from either side of the heap by means of a steam shovel, having a bucket of 2.5 tons capacity, onto 50-ton ore cars; it takes about 5 min. to load a car. When the ore is badly sintered, 40 per cent dynamite is used to loosen the material.

The roast heaps of the Tennessee copper were arranged similarly to those at Copper Cliff, only they were smaller.

(*b*) The area of roast yard necessary for furnishing daily a given amount of ore is very large. A heap 40 by 24 ft. and 6 ft. high holds 240 tons of ore and burns 70 days; adding 10 days for building and removing makes 80 days. Such a heap then furnishes per day 3 tons of roasted ore; 35 heaps give 105 or, in round figures, 100 tons of ore per day. Allowing 10 ft. at the ends and 6 ft. at the sides of a heap for working gives an area of $60 \times 36 = 2{,}160$ sq. ft. for a heap, or 75,600 sq. ft. for 35 heaps or 100 tons roasted ore per day.

(*c*) The ground on which heaps are to be built ought to be dry and hard, similar to a macadamized road. A ditch dug at the upper end prevents water from entering the yard, which slopes either toward the lower end or toward the two sides. Drainage may be assisted by underground drain pipes. At Ducktown, Tenn.,[4] 31.4 per cent of the Cu in a heap was lost by defective drainage,

[1] "Copper Smelting," p. 111.

[2] *Report to Minister of Mines*, British Columbia, 1902, p. 243; BREWER, *Mining Sci. Press*, 1903, LXXXVII, 7; *Eng. Mag.*, 1904–05, XXVIII, 348; JACOBS, *Eng. Mining J.*, 1904, LXXVIII, 748.

[3] NEILSON, *op. cit.*, 1899, LXVIII, 457.

[4] WENDT, *School Mines Quart.*, 1885–86, VII, 173.

being leached by frequent heavy rains. If the ground is soft, it becomes mixed with the roasted ore;[1] it may be hardened by removing the surface with a scraper, filling the excavated space with rock or coarse slag, and the interstices between the latter with gravel, concentrator tailing, or granulated slag, and covering the new surface with loam and rolling it down. The finished yard should be two or more inches higher than the surroundings.

(*d*) Crushing and Sizing of Ore.—The most suitable size of ore for roasting is from 1.75 to 2 in. if it contains under 25 per cent S, and 3 in. if it contains more sulphur; ore larger than 3 in. is likely to form kernels. These general figures will undergo slight changes with the character of an ore as dictated by practical experience.

The ore is crushed by machinery (rock breakers) or by hand (spalling). The former works cheaply, but makes many fines; the latter permits sorting out barren rock and may thus compete with the former in small plants. However, crushed ore can be conveyed by picking belts and barren rock removed. The crushed ore is sized into three classes: coarse, 1 to 3 in.; medium (ragging) 1 in. to 3-mesh; fine, under 3-mesh. The sizing is done by grizzlies, trommels, or shaking screens; if hand labor is employed, by forking out the coarse and separating the undersize by shoveling onto an inclined screen. The relative amounts of the sizes obtained in crushing vary greatly; thus, Peters[2] gives coarse 55, ragging 25, fines 25 per cent, and Glenn[3] coarse 82, ragging 7, fines 11 per cent as average figures for the product.

(*e*) The Heap.—The most important dimension of a heap is its height, which varies with the percentage of S. An ore with 15 per cent S can stand a height of 8 ft. above the bed of wood; one with over 35 per cent S only about 5 ft.; an average height is about 6 ft. The length and width have little influence upon the result of the roast; large heaps which burn a long time are, however, more advantageous than small ones, as both furnish about the same amount of imperfectly roasted ore, which has to be re-treated.

(*f*) Building the Heap.—As a foundation for the heap, fine ore is spread on the ground to a depth of 4 to 8 in. In this is placed two layers of cord wood at right angles and upon this is spread the ore. Wooden flues are placed here and there and the ore is spread in such a way that suitable distribution of incoming air is obtained. Fine ore on the outside of the heap tends to keep the draft regulated. The construction of the heap is the result of long experience and careful study, the object being to produce a maximum elimination of sulphur and a minimum of unroasted ore.

(*g*) Firing.—The firing of a heap is started early in the morning on a bright day. If there are no draft flues, the firing is begun at the ends, otherwise the kindling in the flues is ignited. The bed of wood will be burning fully in from 4 to 6 hr. after starting, and the ore starting to roast. When the burning of the ore has progressed about 1 ft., a thin layer of fines is spread over the surface

[1] WENDT, *School Mines Quart.*, 1885–86, VII, 180.
[2] *Op. cit.*, p. 90.
[3] *Op. cit.*, p. 353.

with a shovel and patted down. This smothering is continued as the fire creeps up, leaving visible a border of ignited ore. When the heap is well started, dense yellow fumes arise, the surface becomes damp (sweats), the heap settles, and fissures appear which are filled with fines. About the third day, the fire will have reached the top, when a workman ascends the heap and covers it with a layer of fines. The sides of the heap will show sublimed S, and As_xS_y if the pyrite was arsenical; if the S is melted, the temperature is too high; if the ore is cemented together by the S, the crusts formed have to be broken. The temperature on the sides and top must be kept even; it is correct when the hand can just bear touching the cover. If too hot, the thickness of the fines is increased; if too cool, it is decreased in order to draw the fire in the direction of the cool place. An average thickness of fines is 4 in. on the top and 3 in. on the sides. After 10 days, a heap requires little more attention than a daily inspection.

In some European works treating pyritic ores rich in S, sublimed S is collected on top of the heap during the first period by making in the cover 25 or more spherical depressions, 14 in. in diameter and 7 in. deep, lining them with raw or roasted fines, and enclosing the top of the heap with boards to protect the S from the prevailing air currents. Nevertheless much S is burnt off; that which remains, about 1 per cent of the S of the ore, is ladled into wooden molds, refined, and sold.

(*h*) Opening (Stripping, Turning) of Heap.—This begins when roasting has ceased, and the heap has cooled sufficiently to allow transferring the ore to the feed floor of the blast furnace. First, the heap is stripped, that is, unroasted fines and ragging are removed and transferred to a neighboring heap that is building; the rest then is pulled down, well-roasted ore being kept separate from that which is imperfectly roasted or fused (heap matte), the last two going to another heap that is being built. Heap matte often has to be blasted.

(*i*) The products are: (1) well-roasted ore, which is porous, reddish-brown (Fe_2O_3) to brownish-black (Fe_3O_4), light, more or less friable; has an earthy fracture; and retains 4 to 7 per cent S, the S content rising and falling with the percentage of Cu, as most of the S is sulphide S in combination with Cu; (2) imperfectly roasted ore, mostly fines and some ragging; (3) sintered and fused ore, a gangue skeleton near the top, from which matted sulphide has liquated and collected on the bottom. The proportions of these three products vary, but (1): (2): (3) = 90:7.5:2.5 are not uncommon.

(*j*) The cost[1] is given as ranging from 20 to 80 cts. per ton of ore. This great difference is caused mainly by the handling of raw and roasted ore, as shown clearly in the costs of Keswick, Cal.,[2] where labor was $1.85 for 10 hr., wood $3 per cord, and the daily capacity from 500 to 800 tons.

The two main advantages[3] of the process are cheapness of plant and operations, with lump ore as a product. The main disadvantages are slow, imperfect,

[1] CHURCH, *Eng. Mining J.*, 1893, LVI, 666; PETERS, "Modern Copper Smelting," 1895, p. 132.

[2] NEILSON, *Eng. Mining J.*, 1899, LXVIII, 458.

[3] HENRICH, *Trans. A. I. M. E.*, 1895, XXV, 224.

intermittent roast, depending upon the state of weather; loss of ore by dusting, tramping under foot, and leaching; locking up of large amounts of ore in an extended roast yard; loss of S; killing of vegetation; and exclusion of fines in excess of, say, 10 per cent. The last is remedied in part by briquetting (Tyee Copper Co.) or moistening with $FeSO_4$ + aq. and allowing to harden (Agordo).

2. *Roasting in Stalls.*[1]—A stall is an oblong space surrounded on three sides by permanent walls; the fourth side, the front, when the stall is to be filled, is closed, wholly or only in part, by brick set dry or by an iron plate; the front wall is removed again when the stall is to be emptied. Frequently a number of stalls are built side by side against a main wall forming a single row as, *e.g.*, at Keswick, Cal.[2] Another arrangement is to have two rows of stalls, back to back with a main flue between them. It is more compact, requires less brick and ironing (if not built of slag brick), retains the heat better, and and makes it convenient to carry off the gases. The top of a stall is either open or closed by a brick arch[3] or an iron plate. Ore stalls are usually open, while matte stalls are closed. Closing the stall gives a better utilization of heat, and insures withdrawal of gases through flues in the back or pipe in the roof.

The advantages of stall- over heap-roasting are: a more uniform distribution and better utilization of heat, hence a smaller amount of wood, a smaller loss of ore by scattering and leaching; a quicker roast, requiring a smaller locking-up of ore; easy disposal of gases. The main disadvantages are: cost of plant; greater cost of labor; close attention to process on account of danger of insufficient roast or of fused charge. At Keswick, Cal.,[4] stalls were replaced by heaps. In general, stalls will be used only with small amounts of coarse sulphide ore.

3. *Roasting in Shaft Furnaces (Kilns).*[5]—The furnaces are shaft-like structures of varying heights in which the ore rich in S is roasted without the use of carbonaceous fuel, the oxidation of S and Fe furnishing the necessary heat. The process is continuous, raw ore being charged periodically at the top and roasted ore drawn at the bottom; the gases containing over 4 per cent vol. SO_2 and being free from carbonaceous matter are suited for the manufacture of SO_3, H_2SO_4, or H_2SO_3. The furnaces are usually classed as lump-ore and fine-ore furnaces. Lump ore ranges in size from ¼ (perhaps ½) to 3 in., a piece larger than 3 (perhaps 3.5) in. not being satisfactorily desulphurized in the center; the actual size within the range is governed by the more or less free-burning character of the ore. It may be necessary to carry the sizing farther

[1] PETERS, *Min. Res.*, U. S. Geol. Survey, 1882, p. 290; 1883–84, p. 389; "Modern Copper Smelting," 1895, p. 40; HENRICH, *Trans. A. I. M. E.*, 1895, XXV, 229, 232.

[2] KELLER, *Mining Sci. Press*, 1896, LXXIII, 497.

[3] WENDT, *School Mines Quart.*, 1885–86, VII, 306.

[4] NEILSON, *Eng. Mining J.*, 1899, LXVIII, 458.

[5] JURISCH, K. W., "Handbuch der Schufelsaeurefabrikation," Enke, Stuttgart, 1893; LUNGE, G., "Sulphuric Acid and Alkali," Gurney and Jackson, London; Van Nostrand, New York, 1913, I, pp. 415–501; WILSON, W. G., "Pyrites in Canada," Canada Dept. Mines, Mines Branch, Ottawa, 1912, pp. 94–132 (roasting of pyrites); WYATT, *Eng. Mining J.*, 1887, XLIV, 165; FALDING, *Mineral Ind.*, 1898, VII, 665; FALDING, *loc. cit.*

and separate the coarse into three classes, 0.25 to 1.00, 1.00 to 2.00, 2.00 to 3.00 in. in order to obtain the best results. Fine ore, smaller than 0.25 in., is roasted separately. A lump ore cannot stand more than 10 per cent fines; a larger amount blocks up the air passages, which results in imperfect roasting and in clinkering.

A comparison of the three roasting apparatus shows that kilns have the advantage in that the process is continuous, independent of the weather, requires less time, gives a better elimination of S, and needs no fuel; the S can be recovered; there is practically no mechanical loss, nor any leaching loss whatever. The disadvantages are the great size and cost of plant per unit of daily product, and the necessity of skilled labor. In general, kilns are used only where there is profit in or necessity of not allowing the sulphurous gas to escape into the air.

57. Roasting in Reverberatory Furnaces.—The long-hearth or circular-hearth reverberatory furnace which was once the standard apparatus for roasting material under ¼ in. in size is today seldom used. The original hand reverberatory was succeeded by various types with mechanical rabbles, such as the Edwards, Merton, Ropp, Wethey, Allen-O'Hara, Keller, Brown, Pearce, Bruckner, etc. These are described and illustrated in the first edition of this book and in Hofman's "General Metallurgy," 1913, but, since they are only of historical importance, a description will not be included here. The general development was from single hearth to superposed hearths and it was but a step from the Pearce turret furnace to the modern multiple-hearth furnace, of which the McDougall was the prototype.

58. The McDougall Furnace in General.[1]—This furnace is a vertical cylinder with superposed horizontal hearths and central rotating shaft with radial stirring arms provided with teeth set at a proper angle. The ore, fed mechanically at the top, is turned over by the rabble arms, moved on one hearth from the periphery toward the center, where it drops through a slot onto the next following hearth to be moved in the opposite direction that it may drop through slots near the periphery onto the third hearth and continue to travel until it is finally discharged from the bottom into a receiver. During the fall of the ore from hearth to hearth a large part of the S and Fe in the ore is oxidized and the required heat generated.

The air necessary for oxidation enters through doors situated either wholly on the bottom hearth or in part on one or more of the upper hearths, and travels in a direction opposite to the ore. In some of the latest furnaces the air is admitted through the rabble arms. This type of furnace, being automatic, does uniform work at a low cost, and permits full control of air and temperature which means a good roast; on the other hand, it makes a considerable amount of flue dust.

The original furnace was in operation in Liverpool, England, about 1870, but was abandoned mainly on account of mechanical difficulties. In this coun-

[1] LUNGE, "Sulphuric Acid and Alkali," 1913, 1^1, 474; BENKER and HARTMANN, *Z. angew. Chem.*, 1906, XIX, 1125, 1188; PIERRON, *Rev. chim. ind.*, 1907, XVIII, 8; WILSON, G. W., "Pyrites in Canada," Canada Dept. of Mines, Mines Branch, Ottawa, 1912, pp. 101–125.

try it was taken up again by Herreshoff in 1896, and later by others. The leading types at present are those of Herreshoff, Evans-Klepetko, with modifications, and Wedge.

The arrangement of the roaster building, although varying in different plants, will be understood in general by studying the section of the Anaconda roaster plant given in Fig. 46.

59. The Herreshoff Furnace.—The new pressure air-cooled Herreshoff furnace overcomes the limitations of the original Herreshoff furnace[1] in that the arms as well as the central shaft of the furnace are sufficiently and positively cooled by means of air supplied by a fan at low pressure (3 to 4 oz.).

Air as a cooling medium has great advantages over water in that there are no troubles due to scaling and that the control of the temperature of the furnace

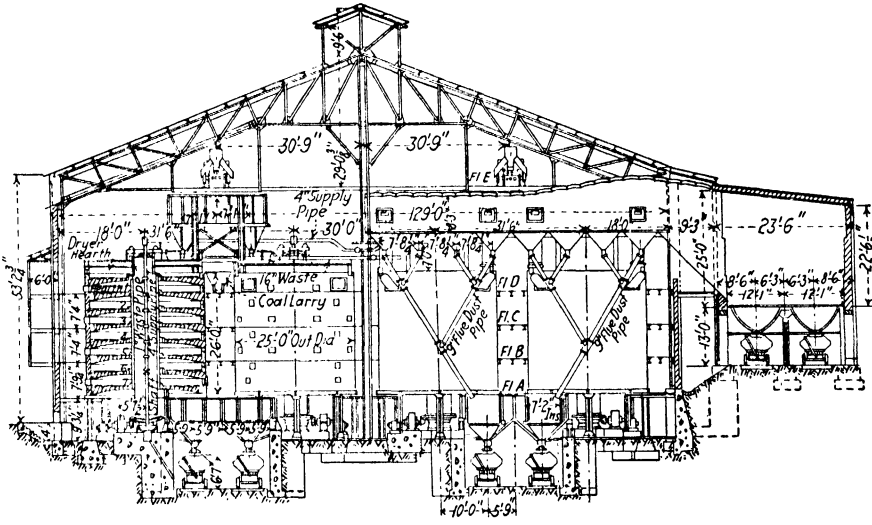

FIG. 46.—Section of roaster building at Anaconda.

may be more readily maintained. Ores carrying from 25 to 48 per cent S may be successfully roasted, since a small or a large quantity of air may be forced through the shaft and arms to suit the required conditions. This air may be discharged from the top of the shaft into the atmosphere at a temperature as high as 500° F. and still have the shaft and arms sufficiently cooled.

When roasting ores low in sulphur, and it is desirable to conserve all the heat possible, this heated air from the shaft may be returned to the bottom of the furnace for combustion purposes, which means that little or no heat is lost in cooling the shaft and arms of the furnace, whereas when water is used as a cooling medium the heat carried off is lost. The heated air may also be discharged into the furnace just below a hearth which drops the ore at the center through nozzles[2] attached to the central shaft, in such a manner that the air will cut

[1] See first edition of this book.

[2] U. S. Pat. 1375346.

across the streams of falling ore and in this way develop a very rapid oxidation of the ore.

The central shaft of the Herreshoff furnace is so designed that the cooling air, coming up through the central tube, is distributed to each rabble arm. This air passes out the full length of the arm and then returns to the outer annular space in the central shaft, to be discharged into the atmosphere or returned to the furnace for the oxidation of the ore.

FIG. 47.—Cast iron bolted type rabble arm for Herreshoff furnace.

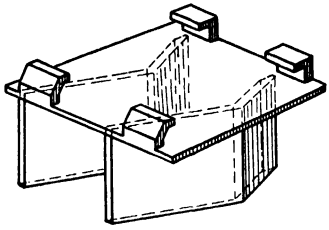

FIG. 47*a*.—Rabble tooth used with cast iron arm (Fig. 47).

The rabble arms of the furnace may be of several designs to suit the desires of the user or the requirements of the process. Of these there are three general types, *i.e.*

1. The cast-iron bolted type (Fig. 47),[1] which is attached to the shaft with bolts, the heads and nuts of which are set in recesses, where they may be covered with a refractory cement which will protect them from the heat and gases of the furnace. The type of rabble tooth used with this arm is shown in Fig. 47*a*.

2. The steel-pipe arm (Fig. 48),[2] which enters a socket on the central shaft and is held in place by a steel pin. This arm may be readily removed through a door in the furnace, while the furnace is still hot, and replaced by another. This operation has been done in 20 min.

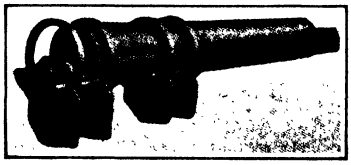

FIG. 48.—Steel-pipe rabble arm for Herreshoff furnace.

3. The cast-iron arm (Fig. 49), which enters a socket[3] on the central shaft and is held in place by a steel pin or bayonet lock. This arm may also be readily removed from the outside of the furnace.

The cast-iron arms lend themselves more readily to variations in design and are particularly adaptable to different methods of attaching the rabble teeth. Also in case anything happens to stop the supply of cooling air, they will not suffer as much as the steel-pipe arms.

Particular attention has been given to the design of rabble teeth. Inasmuch as a certain volume of ore is delivered to the furnace at each revolution, it can readily be seen that when a series of straight rabble teeth are set parallel to each

[1] U. S. Pat. 976175 and 1085419.
[2] U. S. Pat. 1191848.
[3] U. S. Pat. 1460658 and 1066110.

other on an arm that each tooth will distribute this volume in a circle over the hearth and that the series of concentric circles or piles of ore must be smaller in cross-section the larger the diameter of the circular pile.

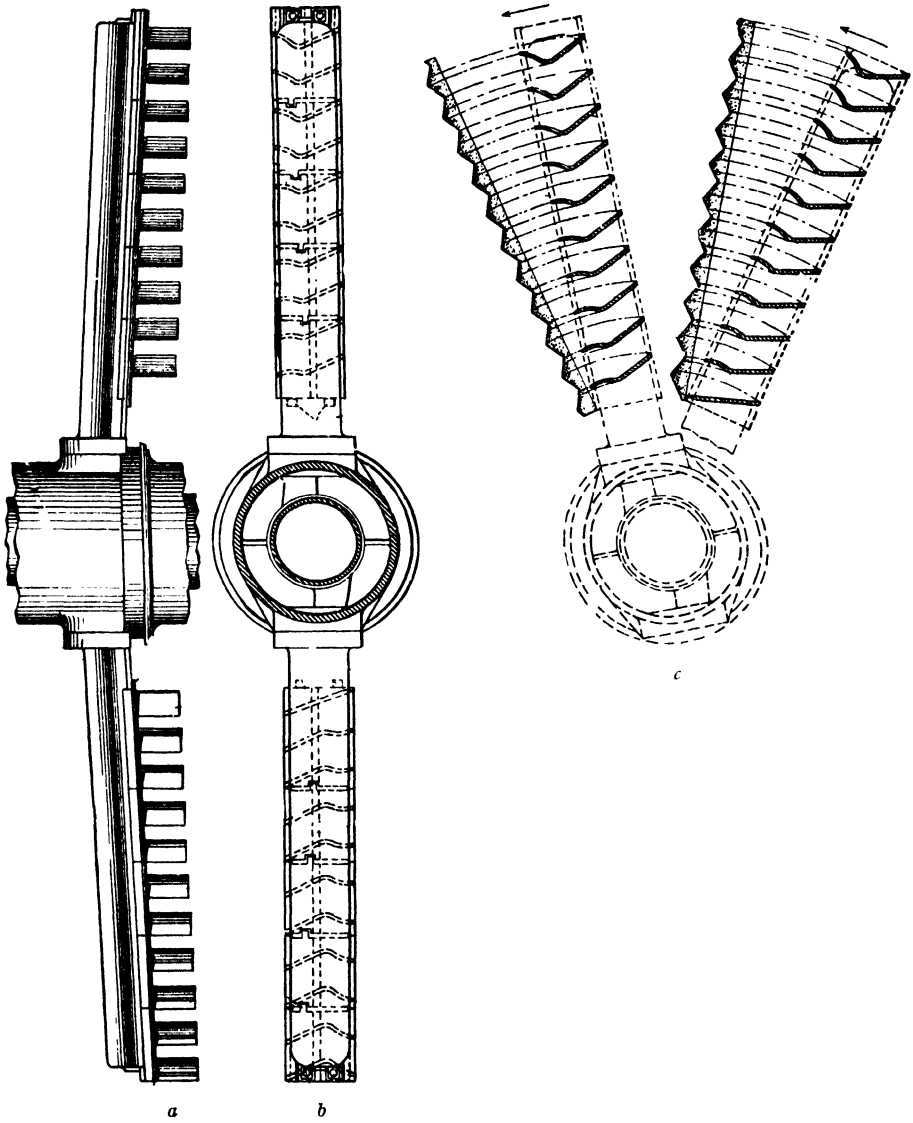

FIG. 48*a*, *b*, *c*.—Steel-pipe rabble arm for Herreshoff furnace showing movement of ore.

The rabble teeth of the Herreshoff furnaces are designed with a bent blade[1] set at varying angles to the axis of the arm so that they will build up the ore pile to a maximum size no matter what is the diameter of the pile or ridge. This

[1] U. S. Pat. 1184394 and 1234408.

means that all of the piles or ridges of ore on a hearth are of uniform size in cross-section instead of diminishing in size as they near the outer perimeter of the hearth. It, therefore, can be readily seen that a maximum surface of the ore is exposed to the action of the gases of the furnace. This design also causes the ore to remain in the furnace a greater length of time. The bent rabble blade is set at varying angles with the axis of the arm, depending upon the distance of the blade from the center of the furnace; a blade, for example, on an out-feed hearth splits the pile of ore, moving a portion of the pile inward, or "back rabbles" it, and builds up the pile to the maximum size and moves outward only a volume of ore equal to the volume fed to the furnace at each revolution. On the in-feed hearth the opposite operations occur (see Figs. 48*a*, *b*, *c*).

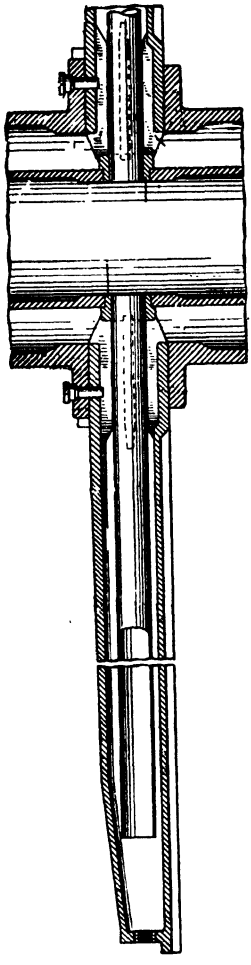

FIG. 49.—Cast iron socket type rabble arm for Herreshoff furnace.

The angularity of the tooth pitch is accomplished by having different patterns of rabble teeth, as shown with the bolted arm (Fig. 47*a*) or the pipe arm (Fig. 48*a*, *b*, *c*), or it may be accomplished without different patterns when using the cast-iron inserted arm (Fig. 49). The two lobes of the pad differ in diameter so that when one tooth pad comes in contact with the next it rotates slightly with the axis of the rabble arm and assumes its proper position. This design of tooth may be used with either the bolted or inserted cast-iron rabble arm.

Another feature of the design of the Herreshoff furnaces which has received special attention is the size of the openings between hearths. In many installations difficulty has been encountered on account of the fine ore carried up by the gases through the hearth openings impinging upon the hearth above and building up in large quantities, making it necessary to bar these off quite frequently. This is a disagreeable undertaking on account of the heat and the difficulty of getting all of the lumps out of the furnace. If left in, these lumps wedge between the rabble teeth, causing trouble. The constant barring off of the sintered ore gradually wears away the hearth and sooner or later a shutdown is necessary to rebuild the hearths. In the Herreshoff furnaces the openings are designed to give a low gas velocity, so that only a minimum amount of fine ore is carried up with the gases and the velocity is not sufficient to cause these particles to impinge and stick to the hearth above.

The hearths of the Herreshoff furnaces may be built of either standard brick shapes, giving a hearth 8 or 9 in. in thickness, or they may be built of special fire tile blocks. While the standard brick are cheaper in the cost of the brick per unit of volume, the labor of laying is greater than with the special tile.

The special tile hearths are designed thinner, particularly near the center of the furnace, and consequently a considerably less weight of hearth brick is required,

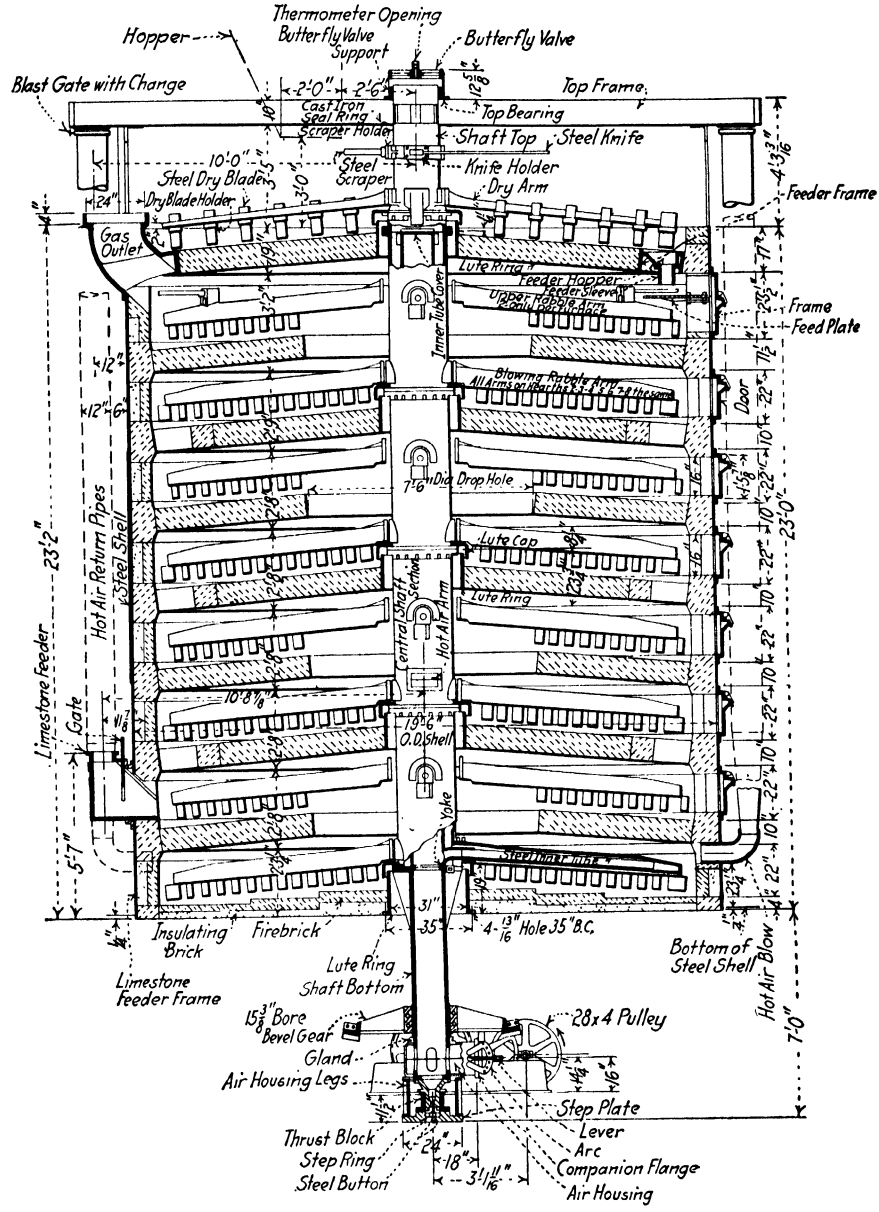

FIG. 50.—New pressure air-cooled Herreshoff furnace.

saving in transportation. Also, with the special hearth tile, the furnace does not have to be so high, making a saving in the height of the building and reduc-

ing the elevation of the point to which the ore has to be delivered to feed the furnaces.

The latest design of new pressure air-cooled furnaces has been installed at the Magma Copper Co., Superior, Ariz. (Fig. 50). These furnaces are 19 ft. 6 in. outside diameter and have eight hearths and a top dry hearth. The furnaces are equipped with pipes for returning the heated air, after it has cooled the shaft and arms, to the eighth hearth for combustion purposes. They are also equipped with "hot-air arms," which permit the direct discharge of the hot air from the outer annular space of the shaft into the furnace just below the fifth and seventh hearths where this stream of hot air will cut the stream of falling ore from the fifth and seventh hearths. These hot-air arms or nozzles may be readily removed from the outside of the furnace and the openings closed, or arms of different size may be inserted. This permits of any portion or all of the air being introduced into the furnace in this manner, or, by means of regulating the dampers in the pipes bringing the hot air down from the top of the furnace, any portion or all of the air may be introduced at the outside, or all of the cooling air may be discharged directly into the atmosphere.

These furnaces are constructed entirely of standard fire-brick shapes, with the exception of the skewbacks for the arches and the large blocks for forming the outer dropholes on the even-numbered hearths.

The hearth arches are conical instead of spherical and the rabble arms of the cast-iron bolted type incline to parallel the hearths. This permits the hearths to be closer together, economizing in the height of the furnace, and also increases the gas velocity over the hearths, which will produce more rapid reactions.

Temperatures taken from a new Herreshoff furnace 21 ft. 7 in. in diameter roasting ore for smelting are given in Table XXIII.

TABLE XXIII.—TEMPERATURES IN A HERRESHOFF FURNACE

Hearth No. 1	455° C.
Hearth No. 2	740° C.
Hearth No. 3	750° C.
Hearth No. 4	910° C.
Hearth No. 5	845° C.
Hearth No. 6	480° C.
Exit gases	400° C.
Cooling air from the shaft	230° C.

Another of these furnaces in the same plant roasting ores for the manufacture of acid gave temperatures of the exit gases as high as 585° C.

A laboratory size of Herreshoff furnace has been designed and built. The smaller size is 24 in. inside diameter, having six hearths of cast iron or fire tile. The larger size is 36 in. inside diameter and has six, eight, or ten hearths of tile or cast iron and is equipped with a top drying hearth.

A typical Herreshoff installation is found at the Calumet and Arizona smelter at Douglas, Ariz.[1] The partly completed roaster building is shown in Fig. 51.

[1] *Mining Sci. Press*, 1918, CXVII, 181.

The furnaces are of the regular six-hearth type with drying hearth. The inside diameter is 20 ft. 2 in. and outside 21 ft. 7¼ in. The battery consists of 24 furnaces, five of which roast high-sulphur material for the acid plant and the remainder discharge their gases into a dust chamber 140 by 60 by 29½ ft. high before they enter the stack. The acid furnaces roast 70 tons ore per day, reducing it to 13 per cent S, while the other furnaces treat 90 tons, reducing it to about 10 per cent. The charge runs about 29 per cent. These furnaces may be crowded to treat 125 tons per day. The average dry tonnage is 96.4 tons per day, requiring 66,000 cu. ft. air per minute, producing 80.5 tons calcine and

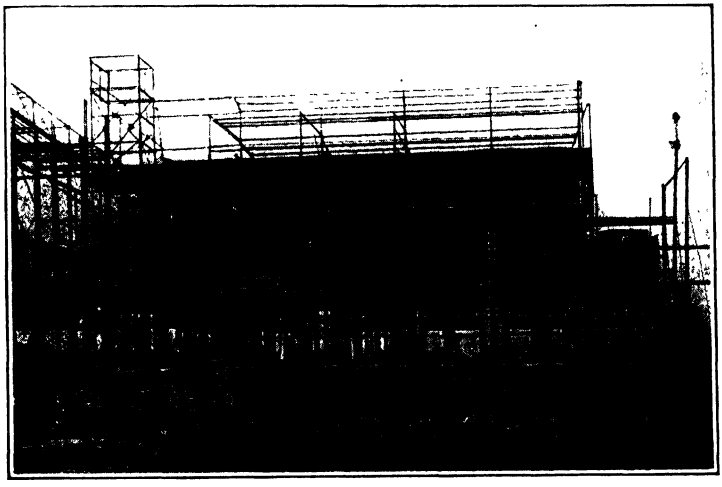

FIG. 51.—Roaster building, Calumet and Arizona Smelter.

dust, volatilizing 70.1 per cent of the sulphur, and giving 2.64 per cent flue dust recovered.

The character of the roaster feed, calcine, and dust is given in Table XXIV.

TABLE XXIV.—ROASTER CHARGE AT THE CALUMET AND ARIZONA SMELTER

	Charge, per cent	Calcine, per cent	Dust, per cent
Silica	16.6	18.1	16.5
Alumina	2.9	3.5	5.6
Iron (Fe)	31.7	38.2	28.7
Lime (CaO)	1.6	1.9	2.3
Sulphur	29.6	9.9	10.7
Copper	4.67	6.12	6.54

60. The Evans-Klepetko Furnace.[1]—The McDougall furnace has undergone various modifications in different smelting plants and the new types are fre-

[1] Allis-Chalmers Co., Milwaukee, Wis.; CROASDALE, *Pacific Coast Miner*, 1903, VII, 471; SÖRENSEN, *J. Can. Mining Inst.*, 1903, VI, 306; *Can. Mining Rev.*, 1903, XXII, 87; HOFMAN, *Trans. A. I. M. E.*, 1904, XXXIV, 277; *Eng. Mining J.*, 1903, LXXVI, 122; AUSTIN, *Trans. A. I. M. E.*, 1906, XXXVII, 462; MOORE, *Eng. Mining J.*, 1910, LXXXIX, 1021; "At Tooele Smelter," *Mining World*, 1910, XXIII, 944; CORWIN and RODGERS, *Trans. A. I. M. E.*, 1913, XLVI, 383.

quently known by the names of the men who have developed them. The Evans-Klepetko modification as developed at Great Falls was an important advance step in roasting furnaces and many installations were based upon it. Batteries of these furnaces, sometimes with added improvements, are still in use at Anaconda and various other plants, but it is noteworthy that new installations of roasters are usually of the Wedge or Herreshoff design. Figure 52 shows curves obtained by Austin and Croasdale in roasting tests with Evans-Klepetko furnaces. It takes the ore about 90 min. to pass through. Two modifications of the McDougall furnace which are based on the Evans-Klepetko design will be considered, *viz.*, the eight-hearth roaster at the Steptoe plant of

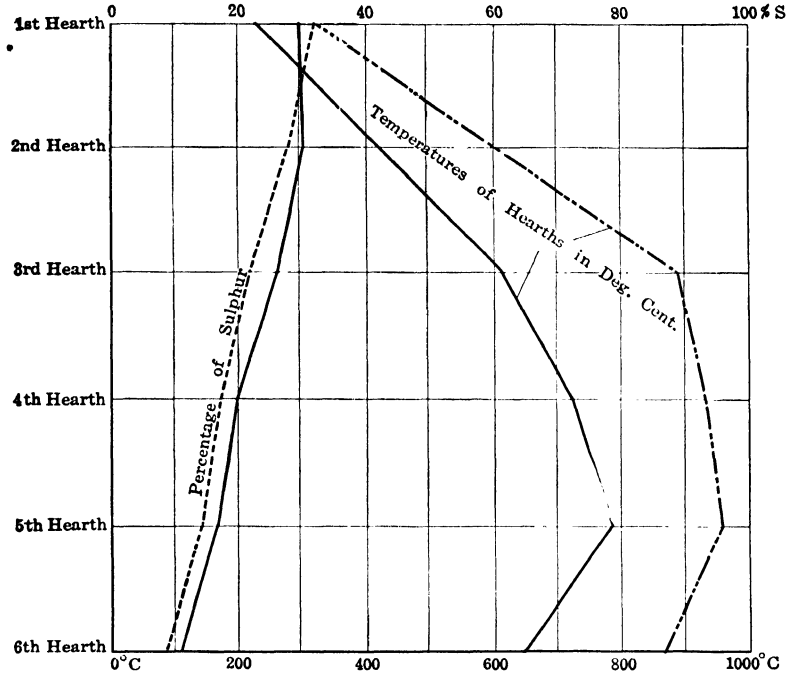

FIG. 52.—Changes of temperatures and sulphur-contents in two Evans-Klepetko furnaces.

the Nevada Consolidated Co. at McGill, Nev., and the nine-hearth roaster developed at the Copper Queen plant of the Phelps Dodge Corporation, Douglas, Ariz.

The Steptoe Eight-hearth Roaster.—The original furnace,[1] on which the present furnace was based, had six hearths, 18 ft. in diameter, with water-cooled arms and shaft. It was found that, in treating wet concentrates containing a large amount of highly aluminous slime, the water content was so high that a longer period in the furnace was necessary in order to get proper roasting. The furnace was therefore modified by adding two hearths and also changing from water to air cooling in order to get the benefit of preheated air in the furnace.

[1] SÖRENSEN, *Eng. Mining J.*, 1913, XCV, 1273.

The construction of the furnace is shown in Figs. 53, 54, and 55, which show a vertical section and half plans of two of the hearths.

The air for cooling is introduced at the bottom of the central shaft under a pressure of 2.9 in. of water, and passes out through the rabble arms, from which it is discharged through holes between the rabble blades. The velocity is not sufficiently high to cause dusting. The air used is approximately 4,700 cu. ft. per minute per furnace.

The feed, in the form of a mixture of filter cake (16 per cent) and coarse concentrate (84 per cent), is brought in bottom-dump cars to the bed hopper, which is discharged to the furnace by a pan conveyor. Feeding is at the edge of the dryer hearth.

Instead of the usual form of rabbles, the dryer hearth is equipped with revolving discs similar to those used on a farm harrow. They not only move the ore forward, but stir it thoroughly, thus promoting the drying and preventing sticking.

The gases are drawn off at the center of the furnace, which promotes equal flow up through the ports.

The hearths, except the bottom one, are made of special shapes of fire brick. There are 25 outside dropholes per hearth, with a total area of about 25 sq. ft. The central dropholes are about 23 ft.

The shaft is driven by a 10-hp. motor at the rate of 34 sec. per revolution.

Various operating data are given in Table XXVIII.

The Queen Nine-hearth Roaster.—This furnace, shown in Fig. 56, was made by remodeling a six-hearth, 18-ft. McDougall roaster embodying the Evans-Klepetko improvements. The special features of the furnace are: (1) The reduction of heat losses by using insulating brick between the lining and the shell and by cutting the total radiating surface to a minimum through diminishing the usual hearth spacing. The cut in

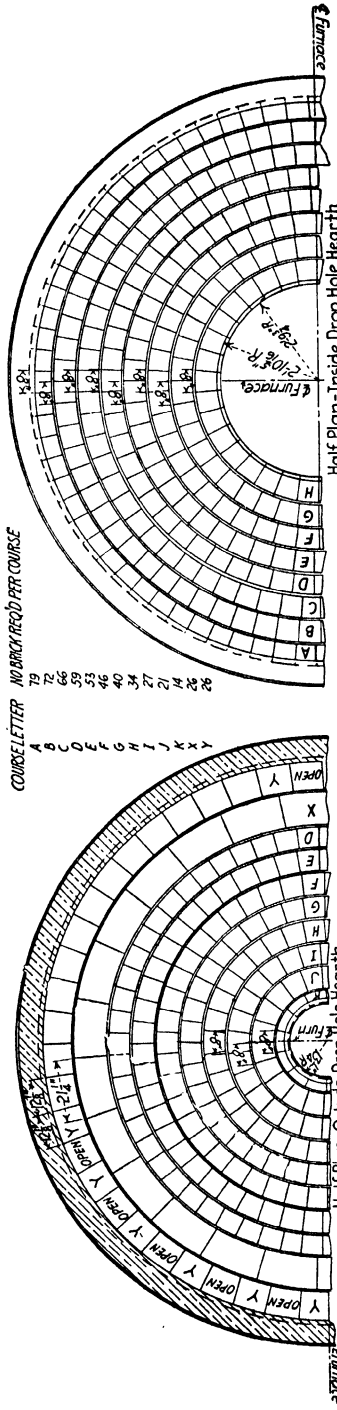

FIGS. 53–54.—Hearths of Steptoe eight-hearth roaster.

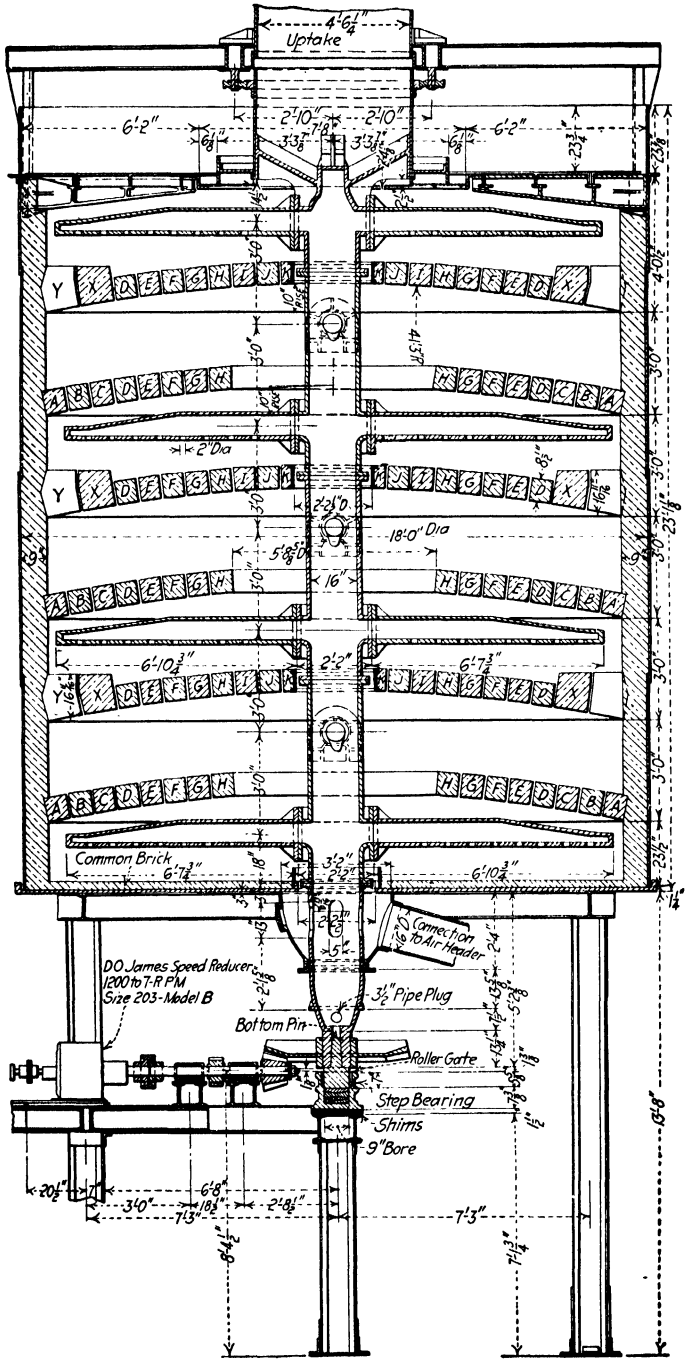

FIG. 55.—Steptoe eight-hearth roaster.

hearth spacing was brought about by using a tapered conical arch, putting the rabble arms parallel to the hearth instead of perpendicular to the shaft, and

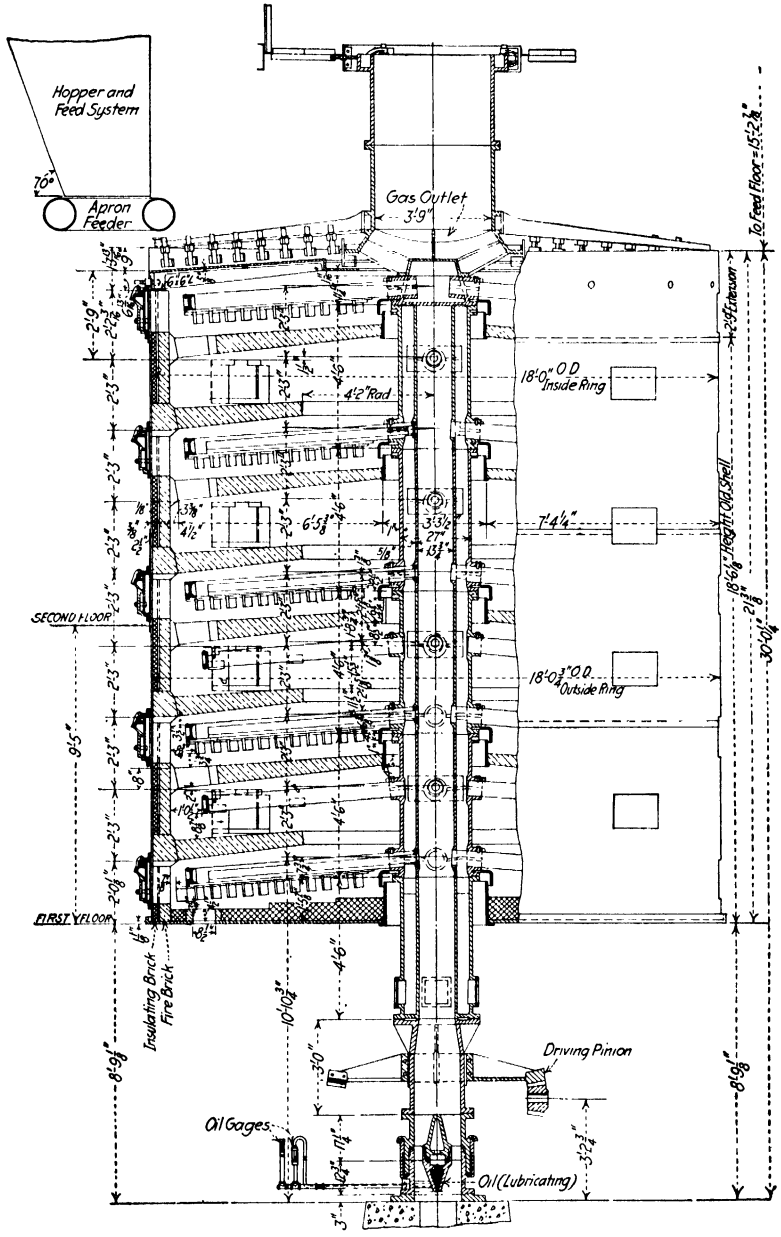

FIG. 56.—Queen nine-hearth roaster.

by reducing the rabble clearance. (2) Improving gas flow and composition and diminishing dusting by using large dropholes. (3) Six rabble arms with 12 in.

blades set at 20 to 30 deg. are used on the top hearth to hasten drying by thorough stirring. (4) A variable-speed motor is used so as to obtain any desired speed from one revolution in 20 sec. to one in 55 sec. Various operating data for the furnace are given in Table XXV.[1] This furnace was designed for a capacity of 125 tons of ore per 24 hr., but on a test run it roasted in 24 hr. 182 tons of ore containing 28.2 per cent sulphur, which was reduced to 11.6 per cent. On another run the furnace roasted 125 tons of ore containing 27.2 per cent sulphur, producing calcines with 11.1 per cent sulphur. The success of this roaster has caused a general interest in increasing the number of hearths.

TABLE XXV.—QUEEN ROASTER, DAILY AVERAGES UNDER DIFFERENT CONDITIONS

	Original design of roaster, estimated performance	Capacity tests			Sweet roast, 30 per cent slimes
		30 per cent slimes		No slimes, 6 per cent H_2O	
		High moisture	Low moisture		
Dry charge, tons	123.9	125.2	182.1	146.2	125.1
Wet charge, tons	137.3	136.6	191.0	156.1	130.6
Water in feed, per cent	9.8	9.3	4.9	6.2	4.3
Water removed by top dry, per cent	7.0	2.1	1.4	1.6	1.3
Water into furnace, per cent	2.8	7.2	3.5	4 6	3.0
Sulphur in feed, per cent	27.2	25.2	28.2	28.4	27.2
Sulphur in calcines, per cent	10.8	10.1	11.6	12.5	6.3
Calcines produced, tons	107.4	108.7	158.3	127 1	108.4
Slimes in feed, per cent	39.0	29.0	29 0	None	25.0
Sand concentration in feed, per cent	12.0	32 0	28.0	40 0	25.0
Crushed ore in feed, per cent	49.0	39.0	43.0	60.0	50.0
Temperature of outgoing gas, degrees Fahrenheit	600.0	564.0	673.0	635.0	762.0
Sulphur dioxide in outgoing gas, per cent	5.0	4.3	8.7	6.2	7.8
Sulphur eliminated, tons	21.9	21.6	35.3	26.7	27.9
Temperature of calcines, degrees Fahrenheit	1,300.0	1,183.0	1,358.0	1,324.0	1,321.0
Dust produced, per cent of charge	.....	4.9	13.1	4.6	12.1
+ ½-in. diameter in charge, per cent	None	22.0	9.4	13 5	9.0
Time down barring, per cent	.....	0.3	7.0	0 4	5.0
Oil used, cents per ton	None	5.2	None	None	None
Draft, inches of water	0.25	0.11	0.14	0.13	0.12

The design of this roaster was based on a series of experiments by the Phelps-Dodge Corp.,[2] which brought out the following facts:

1. All ore roasted should be crushed to pass ⅜-in. round holes, otherwise too much undecomposed FeS_2 may remain in the center of the lumps.

2. Hygroscopic and combined water in the charge is evaporated in the upper part of the roaster at the rate of 58 lb. per day per square foot of actual hearth area used for drying. The ore must reach about 150° C. to expel all the water.

[1] *Mineral Ind.*, 1921, xxx, 186.

[2] H. H. Stout, private communication.

3. After driving off the water, the ore is heated from 150 to 425° C. by the ascending gas at the rate of 700 lb. per day per square foot of hearth area actually used for heating.

4. In order to obtain an exit gas with 5.0 per cent SO_2 by volume, there must be at least 5½ hearths set aside for active oxidation. This allows an exit gas at 200° C.

5. The port areas should be large to cut down gas velocities and accretions due to impinging ore particles. If the charge contains no flotation material, the gas velocity may reach 400 ft. per minute, but if the charge contains as much as 25 per cent flotation material the velocity should not exceed 300 ft. per minute.

For calculating the number of hearths for the roaster, the following principles were used:

1. Knowing the sulphur to be eliminated per ton of ore, compute the volume of gas at 700° C. with 5.0 per cent SO_2. Assume a port velocity of 400 ft. per minute.

2. Compute the water to be removed per roaster day and divide by 58 to obtain the drying area required.

3. Compute the pounds of ore per day and divide by 700 to obtain the hearth area required to heat the ore to 425° C.

4. Add 5½ hearths for oxidation. With an average ore there is required
For 6 per cent water 9 hearths.
For 8 per cent water 11 hearths.
For 10 per cent water 13 hearths.

61. The Wedge Furnace.—The leading features which distinguish this furnace, shown in Figs. 57 and 58, from the preceding Evans-Klepetko and its modifications are: an accessible central vertical shaft, usually 5 ft. in diameter, which, in recent installations, is mounted on a heavy-duty roller step-bearing and held vertically true by a top-guide bearing carried on the outer shell of the furnace; several cooled rabble arms which are locked to the shaft by means of an improved latch or dog locking device operated within the shaft; a mechanically stirred open dryer or preheater hearth which forms the top of the furnace.

The central vertical shaft of the Wedge furnace is built of ½-in. steel plate and insulated or protected from the heat and destructive gases by a 4-in. layer of tongued and grooved fire tiles which are firmly attached to and revolve with the shaft. In furnaces wherein heat is to be conserved, insulating material, such as Silocel or Nonpareil, is placed between the shaft and the tile covering. Obviously, such a central shaft requires no provision for cooling it. The shaft, being insulated and open top and bottom, it is not much hotter within the shaft than it is immediately adjacent to the outer shell of the furnace.

The furnace, 22 ft. 6 in. in diameter outside and approximately 33 ft. high, has seven roasting hearths and one dryer or preheater hearth. It is built of a ½-in. steel shell, lined with a full course of either good-quality red brick or second-grade fire brick; the shell stands on columns 7 ft. high, of structural steel, to allow for automatic discharge of roasted ore into cars. The hearths are arched

with a spring or rise of 13½ in. and are usually 2 ft. 10 in. center to center. The manufacturer advocates a level-top arch, formed by the use of special brick

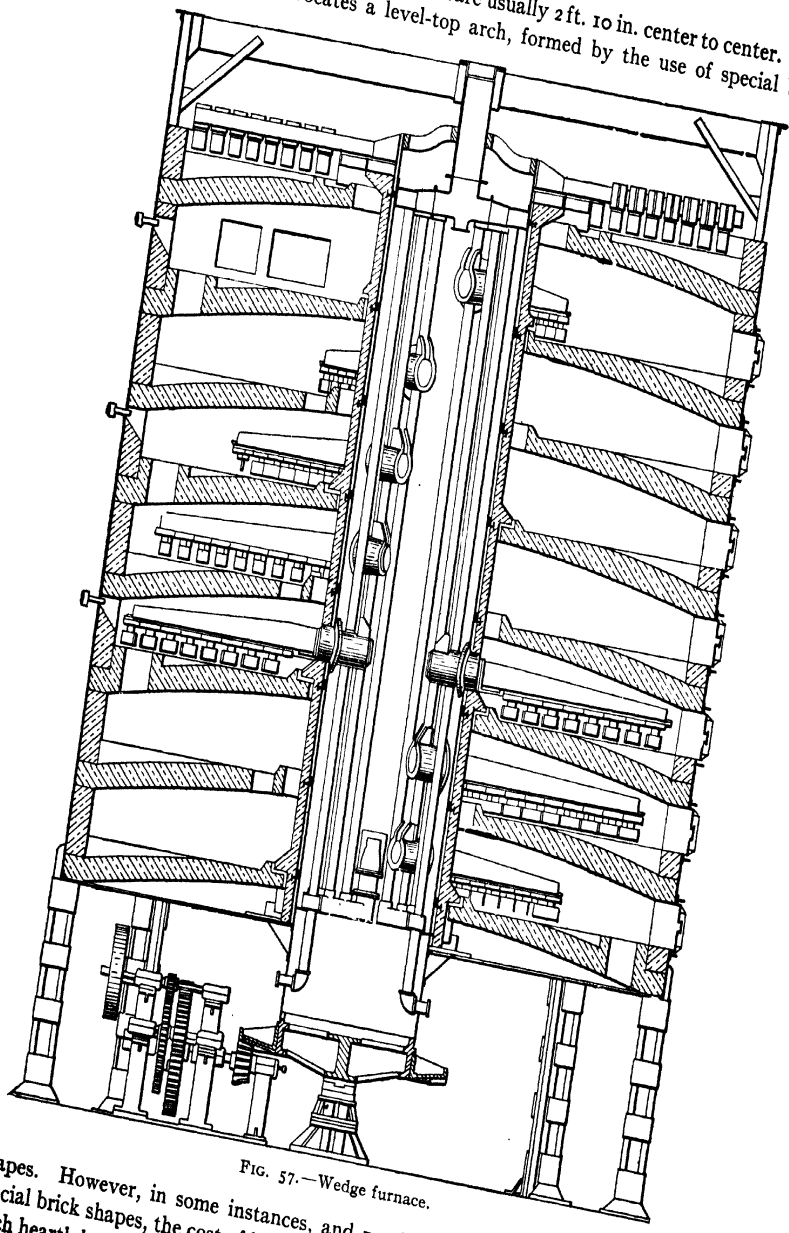

FIG. 57.—Wedge furnace.

shapes. However, in some instances, and particularly due to rising costs of special brick shapes, the cost of level hearth construction is deemed prohibitive. Each hearth has the usual two rabble arms, which make one revolution in 1 to 2

min. These arms are provided with an improved locking device (as mentioned above) by means of which a workman inside the central shaft can loosen or fasten any arm, with the aid of an ordinary monkey wrench.

As compared to the breech block locking device used in early Wedge furnaces, this latch or dog locking device is a great improvement, inasmuch as there are no loose pieces for the workman to contend with when replacing a worn-out arm. An exchange of arm, including pipe connections, is made in less than 1 hr. The non-cooled arms of the dryer or preheater hearth are provided with adjustable plows or blades.

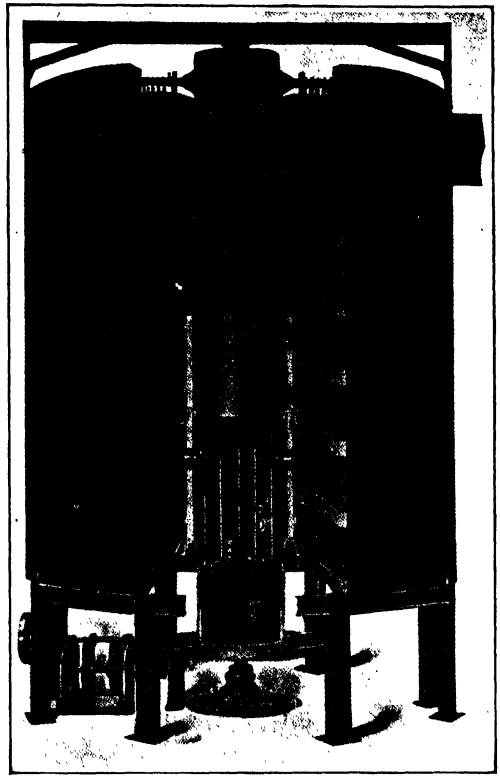

FIG. 58.—Wedge furnace.

Wedge furnace arms and piping system may be designed for either air cooling or for water cooling. The majority of operators seem to prefer air cooling, and it has the advantage that all or part of the heated air from the arms may be exhausted directly into the furnace, thus drafting the furnace with preheated air and effecting fuel economy in operations where the ore or concentrate does not produce sufficient heat units for auto-roasting. The central shaft is supported by a master gear approximately 11 ft. in diameter, carried on a step bearing so designed that the active elements can be easily removed for the purpose of inspection or cleaning.

The active bearing elements in some of the modern Wedge furnaces consist of heavy-duty roller thrust- and journal-bearings, while others consist of steel discs or buttons and plain journal for the guide bearing. Power is derived from a driving pulley, usually making 100 r.p.m., a series of spur gears, and a bevel pinion which engages the master gear. A safety or shearing pin is provided to transmit the power from the largest spur gear to a flange on the horizontal shaft. At the top of the central shaft is either a cast-iron water pan or air inlet, as the case may be, supplying cooling medium to the several rabble arms. Each arm has its own supply pipe and discharge pipe, with means for regulating the sup-

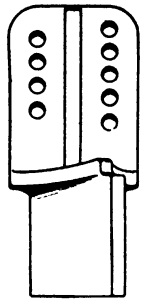

FIG. 59.

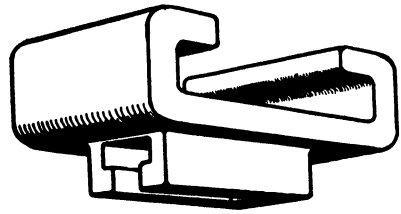

FIG. 60.

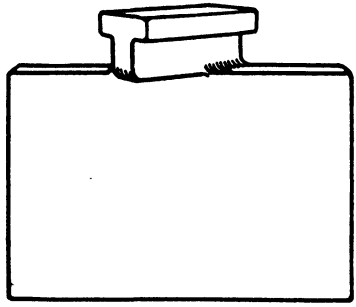

FIG. 61.

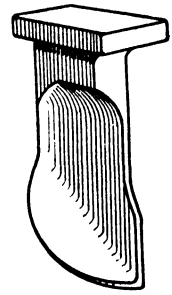

FIG. 62.

FIGS. 59–62.—Rabble blades and holders for wedge furnace.

ply of cooling medium admitted. For water cooling the arms, each furnace requires about 32 gal. of water per minute. For air cooling, each furnace requires a total of about 3,000 cu. ft. per minute at a pressure of 2 oz. per square inch.

The rabble arms are so placed that they are not touched by the ore dropping from hearth to hearth. They are provided with underhung blades (separately removable). Various shapes and sizes of rabble blades and holders are used. Some of these are shown in Figs. 59 to 62. All are plain castings have no machine work, and are therefore obtainable at any foundry. Since the rabble blades are partly embedded in the roasting ore, these castings, unlike the arms, are obliged to stand abrasion; consequently, they are the most frequently replaced parts in a roasting furnace. Replacement of these castings is a simple

operation. The blade is not attached to the holder by means of any fastenings, but merely held by flanges cast on the holder. The blade holder is likewise held by flanges cast on the arm.

A number of alloys have been tried, but the ratio of initial cost to time of service has not usually shown economy as compared to the use of ordinary cast iron.

In roasting ores which have a tendency to cake and grow on the hearth, it is necessary to plow up the caked ore at intervals. This is generally termed "spudding." For this purpose, cutting blades are provided, which may be placed on the arm periodically in substitution for the rabble blades.

The dryer-hearth arms are also provided with plows, which are so secured to the arm that they can be lowered as they wear off.

The ore is fed to the periphery of the dryer or preheater hearth by any suitable means. The dryer-hearth arms rabble it across this hearth and into a gas-tight feed and lute device at the center, from which it discharges to the first roasting hearth. The gases of the furnace travel counter to the ore and make exit through a suitable gas outlet at the first roasting hearth.

This seven-hearth and dryer- or preheater-hearth furnace, 22 ft. 6 in. outside diameter, with a total effective roasting hearth area of 1,940 sq. ft., is rated at a capacity of 70 tons sulphide copper ore with 35 per cent S, reducing the S to 7 per cent, or approximately 1 ton for each 28 sq. ft. of effective roasting hearth area. Furnaces of this size have been crowded, at times, to a capacity of over 100 tons per 24 hr. The above hearth area (1,940 sq. ft.) is exclusive of dryer hearth and drophole areas. The furnace will require, when operating at 70 tons capacity, approximately 6 to 7 hp. Two men per shift can attend to the operation of a number of furnaces.

Wedge Furnaces at the United Verde Smelter.—A typical Wedge furnace installation is found at the plant of the United Verde Copper Co., Clarkdale, Ariz. There are two sets with 12 furnaces each, the first installed in 1915 and the second in 1920. The older furnaces are 21.5 ft. in diameter and have six calcining hearths and a drying hearth, while the newer ones are 22.5 ft. in diameter and have seven calcining hearths and a drying hearth. The ore is fed at the outer edge of the dryer hearth from two hoppers placed diametrically opposite each other. Auxiliary heat is furnished by four oil burners to each furnace. In the old furnaces there are two burners on the second hearth from the top and two on the fourth. In the new furnaces the burners are placed on the third and fifth hearths. The burners may be swung out of position when not required. Where the sulphur in the roaster feed is 24 per cent or better, no auxiliary heat is required except for remedying some local condition and averages only 0.25 gal. per ton with the normal charge of 70 to 75 tons. Forcing the capacity to 110 tons per furnace day increases the oil consumption to 3 or 4 gal. per ton. With the sulphur at 21 per cent and the tonnage at 70 to 75, the oil consumption is 1 gal. per ton.

The roaster feed which is minus ½ in. in size and contains 3.0 per cent moisture is delivered from the crushing plant to the storage bins. Belt conveyors

transport the material to a bucket elevator, which discharges onto another conveyor at the top of the roaster building. The four lines of furnaces, six to a line, are each served by a cross-conveyor which runs at right angles to the main conveyor. A moving tripper travels back and forth on the cross-conveyors, distributing the charge so that a uniform mixture may be maintained.

The dimensions of the conveyors and elevators are given in Table XXVI.

TABLE XXVI.—DIMENSIONS OF CONVEYORS AND ELEVATORS IN ROASTER DEPARTMENT, UNITED VERDE

	Feet	Inches wide	Ply
Storage bin to elevator	110 long	30	6
Two elevators	60 high	20	10
Elevator to cross-conveyors	147 long	20	6
Two cross-conveyors to old roasters	176 long	20	6
One cross-conveyor to new roasters	123 long	30	6
One cross-conveyor to new roasters	166 long	30	6

The analyses of the roaster feed and calcine are given in Table XXVII.

TABLE XXVII.—ROASTER FEED AT THE UNITED VERDE SMELTER

	Cu	SiO_2	Fe	Al_2O_3	CuO	S	Zn
Roaster feed	5.1	30.0	23.7	7.1	0.7	20.8	1.7
Calcine	5.5	32.5	26.0	7.8	0.8	0.0	1.8

The total shrinkage from feed to calcine amounts to about 15 per cent. The calcine is discharged from the old furnaces at about 495° C. and from the new furnaces at about 540° C. It is taken in hopper-bottom cars to the reverberatory furnaces.

The gases, which amount to about 400,000 cu. ft. per minute, at flue conditions pass through a header flue to a dust chamber 140 ft. long, 50 ft. wide, and 21 ft. high, and then to a Cottrell treater. The dust recovery is about 2 per cent of the feed. The draft where the gases enter the dust chamber is about 0.2 in. of water. The gases at this point contain about 2.85 per cent SO_2 and the temperature is about 220° C. The dust losses vary as the square of the tons per furnace day, and there is four times the dust loss with 1 per cent moisture as there is with 3 per cent.

The number of men employed with 20 to 22 furnaces in operation is 29, as follows: one foreman, six furnace men, one charge mixer, six helpers, one repair man and helper, two conveyor men, and eleven laborers. The roaster feed bins are filled on the day shift.

Normal roasting costs about 20 cts. per ton, but this is increased with feed rates above or below the normal 70 to 75 tons per day. The normal rabble speed is one revolution in 1 min. 53 sec. No advantage is gained by increasing this and repair costs are increased. The ore is hard and compact and roasts slowly. It must be crushed fine to insure sufficient reduction in sulphur content.

Wedge Furnaces and Calcine Car at the International Smelter, Miami, Ariz.—Concentrates are treated in Wedge roasters which are run at such a low tem-

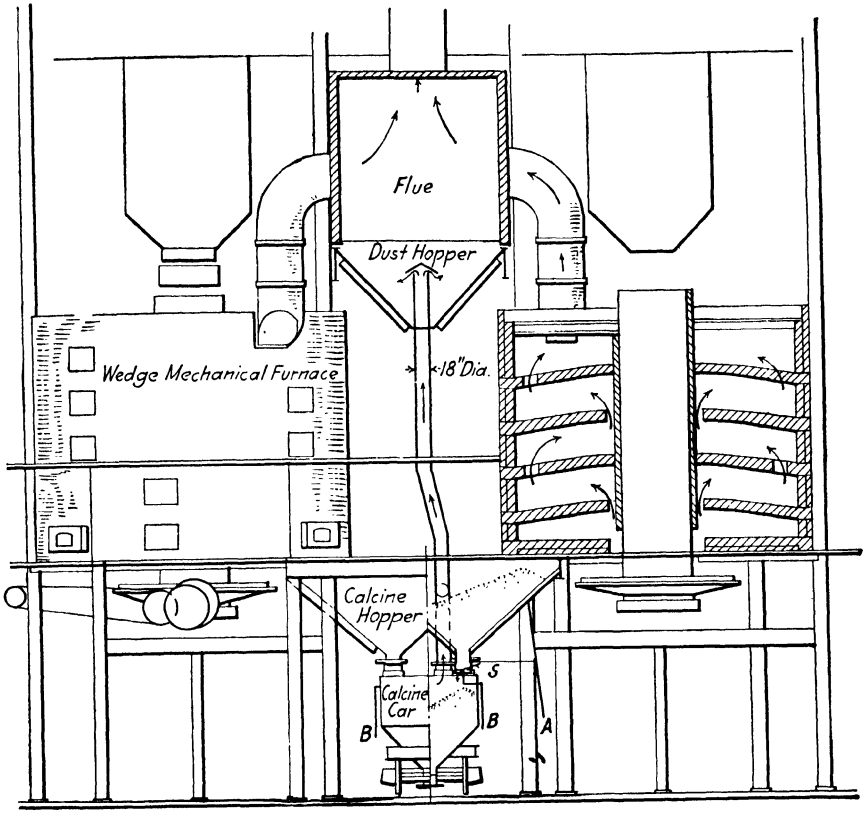

FIG. 63.

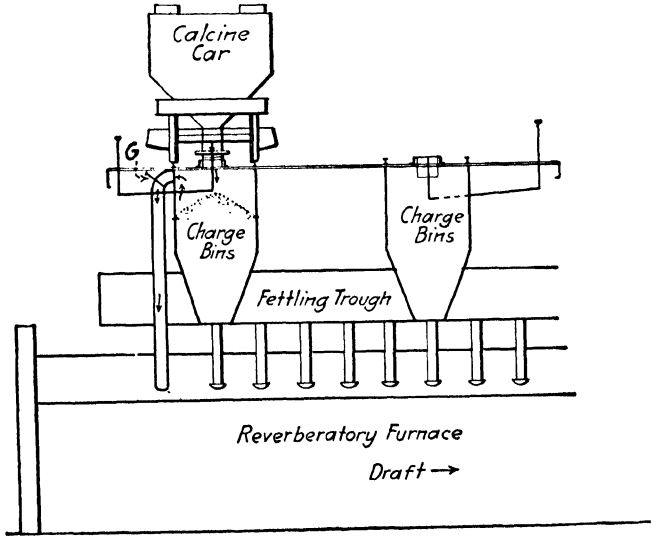

FIG. 64.

FIGS. 63–64.—Calcine car at International Smelter, Miami.

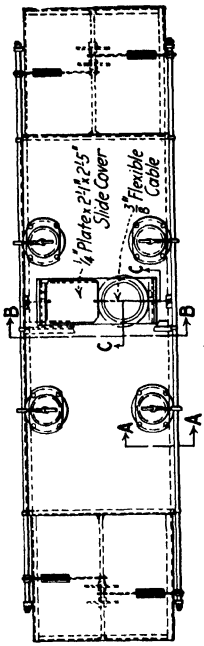

FIG. 67.

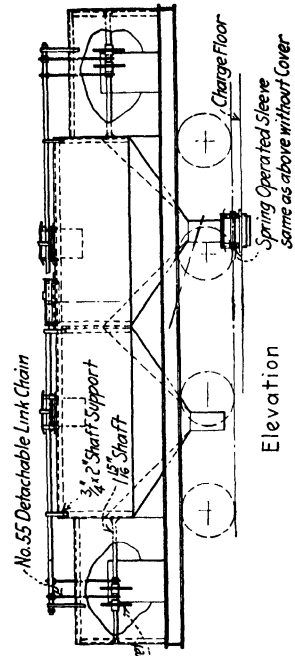

FIG. 68.

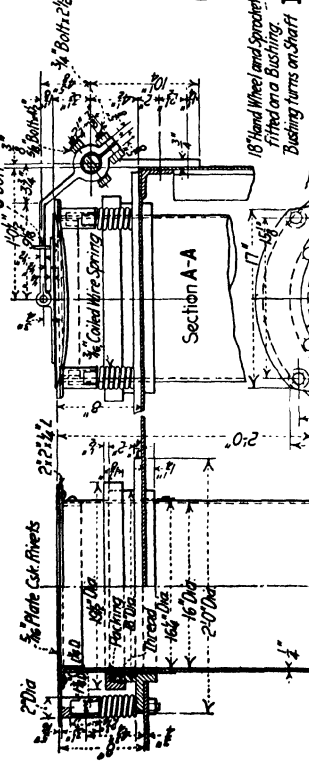

FIG. 65.

FIG. 66.

FIGS. 65–68.—Calcine car at International Smelter, Miami.

perature that practically no roasting takes place, the object of the treatment being to dry and warm the charge for the reverberatory furnaces. Special precautions are taken to prevent dust losses in the handling of the dry material. With this object in view, special calcine cars have been constructed with spring-operated sleeves which make tight connections with the discharge hoppers of the dryers and with the charge hoppers of the reverberatories. The construction and operation are illustrated in Figs. 63 to 68.

Figure 63 shows a car receiving discharge from the dryers. In this position it receives calcine through four openings and the air expelled from the car with such dust as it may contain passes, as indicated in the sketch, up to a dust hopper and thence to a Cottrell precipitator (see Fig. 174), the dust from which is returned to the furnaces.

Figure 64 shows the car in position over the reverberatory furnace where it is discharged through the two bottom gates to the furnace charge bin. It should be noted that in this case the air displaced from the bin passes through a pipe, as indicated, into the furnace.

Some details of the car mechanism are shown in Figs. 65 to 68.

The dustproof sleeve for making the connections with the dryers and furnace hoppers, together with the cover mechanism, is shown in Figs. 65 to 66. The plan of the car with the four holes for receiving calcine and the dust-discharge hole with damper mechanism is shown in Fig. 67. The elevation of the car with mechanism for operating the covers and the connection with the reverberatory charge hopper is shown in Fig. 68.

62. Table of Roasting Data.—Table XXVIII gives operating data from various plants. It brings out clearly the fact that there are only slight differences in the practice by different companies and these are due mainly to differences in the character of the feed.

63. Blast Roasting in General.—The blast-roasting of sulphide copper ores has not become so prominent as the blast roasting of lead ore. This is due in part to the difficulties encountered in the operation, but mostly to the fact that a sulphide copper concentrate is easily roasted in a McDougall furnace, and more cheaply than by any blast-roasting device, and smelted in a modern large-size reverberatory furnace, often at less cost then coarse material in a blast furnace. Blast roasting will, therefore, probably be restricted mainly to districts in which reverberatory smelting on a large scale is not practicable nor profitable. This is the cause of scarcity of blast-roasting plants in the United States; they are more common in Spain, Australia, and other countries. Blast roasting of sulphide copper ore and copper matte, in pots, has received in Australia special names, such as Knapp-Kunze and McMurtrie-Rogers processes.

The principles of blast roasting have been discussed elsewhere[1] as well as its more specific application to the lead melting industry.[2] The various forms of pots for up-draft sintering have been replaced almost completely by the Dwight-Lloyd sintering machine and a description of them is, therefore, omitted.

[1] HOFMAN, "General Metallurgy," 1913, pp. 411–429.

[2] HOFMAN, "Metallurgy of Lead," 1918, pp. 177–207.

TABLE XXVIII.—GENERAL ROASTING DATA

	International Nickel Co., Sudbury, Ont.	Garfield Smelter, Garfield, Utah	A. S. & R. Co., Hayden, Ariz.	El Paso Smelter, El Paso, Tex.	Tacoma Smelter, Tacoma, Wash.
Number, types, and sizes of roasters preparing ore for reverberatories	4 Wedge furnaces	8 Garfield-McDougall 8-hearth, 19½ ft. 16 McDougall (old) 6-hearth, 18 ft. 14 McDougall (new) 6-hearth, 19½ ft. 6 Herreshoffs 6-hearth, 19½ ft.	5 McDougall 5-hearth, 24 ft. 3 McDougall 6 hearth, 19½-ft. 4 Herreshoff 7-hearth, 21½ ft.	4 Wedge 7-hearth, 22 ft. 8 Wedge 5-hearth, 22½ ft.	6 Herreshoff 19½ ft.
Number and types of roasters used for other purposes	None	4 Herreshoff for acid plant	None	None	Godfrey for arsenic roasting
Speed of rabbles	22½ r.p.h.	1 r.p.m.	1 rev. 40 sec.	60 to 80 r.p.h.	1 r.p.m.
Nature of feed to roasters	Raw ore, 25 per cent on 20 mesh	65 per cent flot. conc., 35 per cent ore, gran. slag, limesand	85 per cent conc., 5 per cent lime rock, 6 per cent slag matte, 4 per cent ore	Conc., crushed ore, by-products, lime rock.	Nothing larger than ¼ in.
Depth of ore on hearths	6 in.	3 to 5 in.	12 in.	6 in.	4 in.
Per cent S in feed	25 approx.	17 to 22	25	17	27
Per cent S in product	11 to 12	10 to 15	12	13	14
Auxiliary heat	None	3 gal. oil per ton ore	Oil burners in Dutch oven	Oil burners	Two oil burners per furnace
Capacity per 24 hr. per furnace	115 tons	(a)	120 tons	200 tons (7-hearth) 120 tons (5-hearth)	135 tons
Precautions to prevent dust loss	... ...	Settling chambers and Cottrell treaters			
Method of dust recovery	Balloon flue and baffled chamber to stack	Settling chambers and Cottrell	Settling chambers and Cottrell	Flue chambers	Dust chambers and Cottrell
Method used to carry calcines to reverberatories	Steel cars, 3½-tons capacity	Motor-driven larry cars	6-ton larries	Larry cars	Larry cars
Composition of roaster gases, per cent	4.25 SO_2	2.1 SO_2	Not known	Not known	3 to 3½ SO_2
Max. temp. in roasters, ° C	800	790	760	650	650
Av. temp. roaster gases, ° C	425	600	120	220	230
Av. temp. calcines, ° C	525	750	680	540	540
Material fed below the drying hearth	Sand occasionally	40 tons limesand per 24 hr. (b)	None	Flue dust on third hearth from top	None
Labor per 8-hr. shift	3 men on day, 2 on others	31 men for 28 roasters, 2,700 tons ore per 24 hr. (c)	1 foreman, 1 fireman, 2 feeders	5 men on 7-hearth roasters	

(a) Garfield type, 110 to 125 tons; 18-ft. McDougalls, 80 to 95 tons; 19½-ft. McDougalls, 90 to 100 tons; Herreshoffs, 90 to 100 tons.
(b) CaO, 48.4 per cent; SiO_2, 7.7 per cent.
(c) 1 Foreman, 1 head fireman, 4 firemen, 3 helpers, 6 feeders, 4 clean-up men, 3 motormen, 1 switchman, 6 binmen.

TABLE XXVIII.—GENERAL ROASTING DATA (*Continued*)

	Copper Queen, Douglas, Ariz.	United Verde, Clarkdale, Ariz.	Nevada Consolidated, McGill, Nev.	Calumet & Arizona, Douglas, Ariz.	Anaconda Copper Mining Co., Anaconda, Mont.
Number, types, and sizes of roasters preparing ore for reverberatories	19 McDougall 18 ft. 1 Queen 18 ft.	12 Wedge 21½ ft. 12 Wedge 22½ ft.	24 McDougall 18 ft.	24 Herreshoff air-cooled 21 ft. 7 in. 6 hearths 1 drying hearth	44 McDougall 16 ft. 28 Anaconda-Wedge 25 ft.
Number and types of roasters used for other purposes	None	None	None	5 of above connected with acid plant	20 McDougall 16 ft.
Speed of rabbles	Queen, McDougall 20 to 50 sec., 50 sec.	1 rev. in 1 min. 53 sec.	1 rev. in 34 sec.	1 rev. 50 sec.	McDougall, 52 sec. Anaconda, 84 sec.
Nature of feed to roasters	50 per cent conc., 50 per cent crushed ore	½ in.	(d)	Thru ⅝ in.	Concentrates—ore, limestone
Depth of ore on hearths	1 to 8 in.	Varies	4 to 8 in.	Approx. 9 in.	4 in.
Per cent S in feed	25.7	19.7	22 to 27	25.7	32
Per cent S in product	12.0	8.5	4.5 to 7.5	11.0	10
Auxiliary heat	Fuel oil when required	oil	Pulv. coal on fifth hearth	0.056 bbl. oil per dry ton charge	No
Capacity per 24 hr. per furnace	Queen, 100 to 120 tons; McDougall, 50 to 60 tons	70 to 110 tons	80 tons	100 tons	McDougall, 40 tons; Anaconda, 135 tons
Precautions to prevent dust loss	.....	.....	.....	Dust chamber 140 ft. long, 3,300 sq. ft. cross-sect.	Dust chambers large flues Cottrell
Method of dust recovery	Settling in flues	Settling flues and Cottrell	Flue system and dust chamber		
Method used to carry calcines to reverberatories	Open tank-cars	22-ton cap. cars, motor-driven	Trains of small cars 8 tons each	20-ton larry cars	Tramming in special cars
Composition of roaster gases, per cent	4.8 SO_2	.....	SO_2 1.57 SO_3 0.06	SO_2 2.7	
Max. temp. in roasters, ° C	.....	.....	690	760	760
Av. temp. roaster gases, ° C	McDougall 230 Queen, 275	.....	210	260	425
Av. temp. calcines, ° C	540	480	525	480	560
Material fed below the drying hearth	Silicious or limey ores	None	Lime rock on seventh hearth	None	None
Labor per 8-hr. shift	8 men operating only	1 roaster and 1 helper tend 12 furnaces. Conveyor brings charge to feed floor	1 shift boss, 5 furnace men, 5 helpers, 3 calcine loaders, 6 concentrate unloaders, 3 clean-up men (day shift only)	11 men	35 men

(d) Table concentrates, 35 per cent (32 per cent S); Flotation concentrates, 33 per cent (27 per cent S); Direct smelting ore, 22 per cent (16 per cent S); Limerock, 10 per cent.

Any material under ¼ in. may be successfully sintered. It must contain sufficient sulphur to furnish the necessary heat for agglomeration of the particles. Otherwise coal or coke must be mixed with the charge. High-sulphur charges may be used and a double treatment given if the sulphur content cannot be sufficiently reduced by one. Fine ores or flue dust require more moisture than coarser material and the presence of fluxes to form a slag of low melting point is desirable. Thorough mixing of the charge is requisite to good work.

64. The Dwight-Lloyd Straight-line Sintering Machine.[1]—This, the leading apparatus for sintering copper ores, is shown in Fig. 69. It consists of a frame of structural steel supporting a feeding hopper, an igniting furnace, a suction box, and a pair of endless-track circuits to accommodate a train of small truck-like elements called pallets which, in combination, form practically an endless

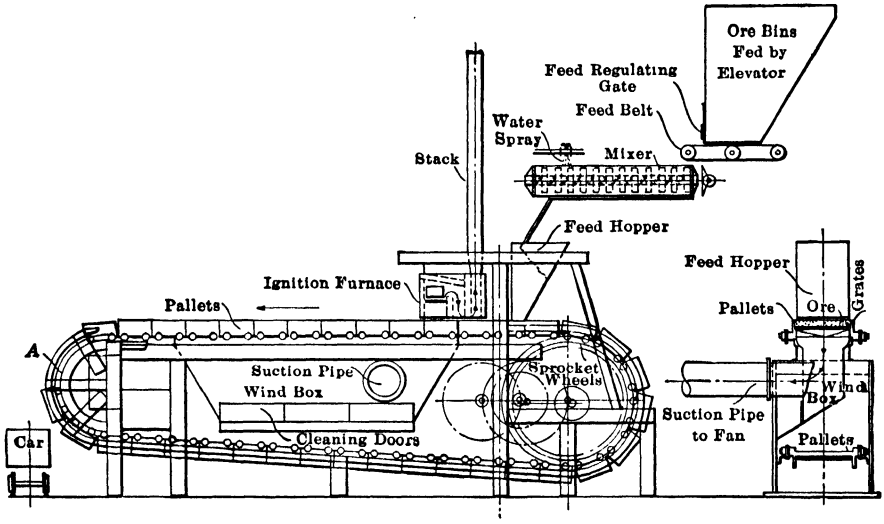

FIG. 69.—Dwight-Lloyd straight-line roasting machine.

conveyor, with the continuity broken at one place in the circuit. Each pallet is provided with four wheels, which engage with the tracks or guides at all parts of the circuit, except when the pallet is passing over the suction box, and then the pallet slides on its planed bottom over the planed top of the suction box, thus making an air-tight joint. In a recent improvement the pallets do not slide on the suction box but the wheels run on rails and support the pallet a short distance above the steel sides. Asbestos cloth interwoven with copper wire and impregnated with graphite is fastened to the side of the suction box in such a way that the suction draws it against the pallets and prevents leakage of air. A pair of cast-steel sprocket wheels, turning inside of concentric guide rails, lift the train of pallets from the lower to the upper track by engaging their teeth with the roller wheels, and launch each pallet in a horizontal path under the feed hopper and igniting furnace, and over the suction box. In a train of pallets in

[1] HOFMAN, *Trans. A. I. M. E.*, 1910, XLI, 759; "General Metallurgy," 1913, p. 430.

action, all the joints are kept closed, and air-tight, by the pallet being pushed from behind. At the beginning and the end of the track formed by the planed top of the suction box, there is a planed "dead plate" over which the pallets must glide; it serves to prevent any leakage of air. After a pallet passes over the suction box and terminal dead plate, its wheels engage the ends of the circular discharge guides. These are adjusted with the view of raising the pallet about 0.5 in. vertically and thus automatically prying up the cake of sinter and freeing it from the grate slots. A "breaking roller" prevents the prying action from extending too far back, and tends to form a line of fracture. This roller, however, is not essential in all cases. On reaching the curve of the guides, the pallets one by one drop into the guides, each strikes the pallet which has preceded it and, at the same time, discharges its load of sinter cake, and shakes free the slots of the grates. The force of the blow can be regulated by the gap left in the train of pallets at this point. The weight of the train keeps the pallets fed down to the lower teeth of the sprocket wheels.

The igniter sometimes used with this machine is a small coal-burning furnace built of tiles, having a grate area of 10 by 30 in. and burning 500 lb. of coal in 24 hr. The flame, after passing over the fire bridge, is deflected downward upon the ore by a brick curtain that can be raised and lowered, and then is drawn upward by the natural draft of a small stack or bleeder. Oil firing is more common at present.

The suction box on top is 12 ft. 6 in. long and 30 in. wide, and gives for the grates an effective hearth area of 31.25 sq. ft.; this is the true measure of the capacity of the machine. The pallets are each 30 in. wide by 18 in. long and weigh, with grates, 550 lb.

The power delivered to the machine has its speed factor reduced by passing through a train of gear wheels, the last of which engage the internal gear teeth cast in the large sprocket wheels, and actuate the train of pallets.

The complete cycle of operations is as follows: A pallet, being pushed onward tangentially from the top of the sprocket wheels, passes under the feed hopper, where it takes its load in the form of a continuous even layer of charge, say 4 in. thick, passes next under the ignition furnace, where the top surface is kindled, and at the same time comes within the influence of the downward-moving currents of air, induced by the suction draft; these carry the sintering action progressively downward until it reaches the grates. The roast-sintering operation is complete, the cake is discharged by dropping into the discharge guides, the pallet crowds its way back to the sprocket wheels, is slowly raised to the upper tracks, and begins a new cycle.

A straight-line machine of the size described with effective area of 31.25 sq. ft. weighs, without accessories, approximately 16 tons.

The general arrangement of a Dwight-Lloyd sintering plant has gradually taken a standard form, of which a diagrammatic sketch[1] is given in Figs. 70, 71, and 72. The ores to be blast-roasted arrive on a belt conveyor (Figs. 70 and 71),

[1] Drawings of plant of Ohio and Colorado Smelting & Refining Co., Salida, Colo., *Met. Chem. Eng.*, 1912, x, 87.

on the top floor of the building containing the mixing bins and are discharged by means of a tripper into the cylindrical hopper-bottom bins. The content of each of these bins is discharged in the desired amount by its traveling belt

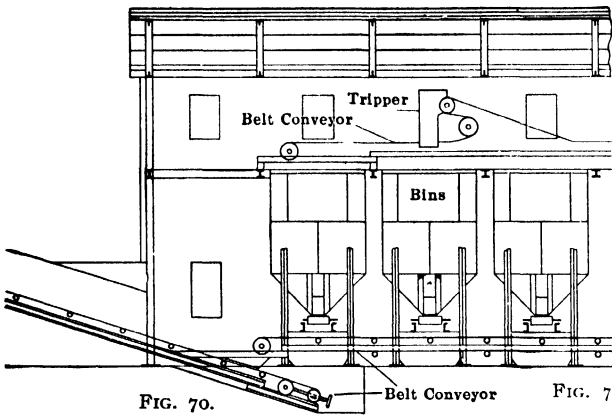

FIG. 70.

Elevation of Mixing Bins

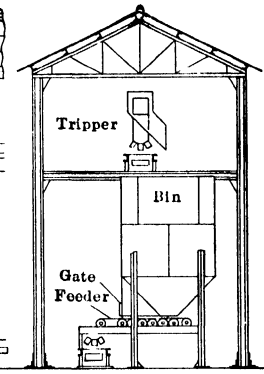

FIG. 71.

Scale $^1/_{16}''$=1 Foot

Section through Bins and Feeders

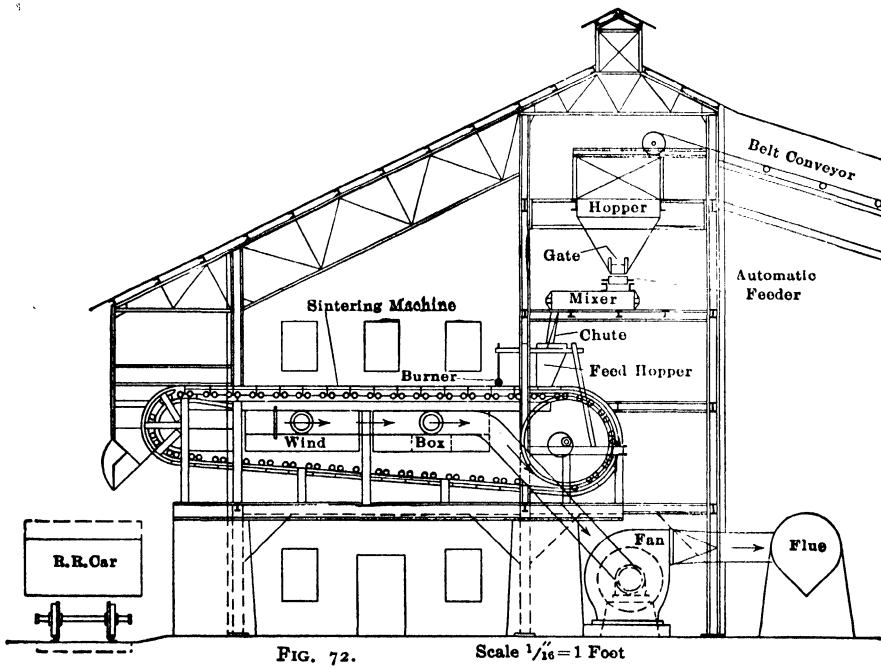

FIG. 72.

Scale $^1/_{16}''$=1 Foot

FIGS. 70–72.—Plant of Dwight-Lloyd straight-line roasting machine.

through a regulating gate onto a main belt conveyor which delivers onto an inclined belt conveyor raising the unmixed charge components to the feed hopper on the top of the roaster building (Fig. 72). This holds the charge,

now mixed somewhat, but insufficiently to furnish a uniform product. This is obtained in the mixer, which receives its material from the hopper through an automatic feeder and gate, and discharges the uniform material through a chute into the feed hopper of the machine proper. By this arrangement the handling and mixing of the ores, as well as the blast roasting, have become entirely mechanical, and require only attendance for overseeing.

In blast roasting sulphide copper ores at Cerro de Pasco, Peru (14,000 ft. elevation), Lloyd[1] found that the ignition flame had to be hotter than at lower altitudes, that charges could be worked with as high an S content as 25 per cent, and that the process proceeded a little more slowly. He also states that the flowers of sulphur and dust from pyritic ore, which collect in the fan and have to be removed at intervals, show no tendency to self-ignition or to forming explosive mixtures.

At Trail, B. C., the 60-mesh concentrate contains Cu 1, Fe 3, SiO_2 40, Al_2O_3 15, CaO 1.5, S 15.5 per cent and Au 1 oz. per ton. From 30 to 35 tons are treated by a machine in 24 hr. with a reduction of the S content to 1.0 to 1.5 per cent. According to Jacobs[2] the herring-bone grate of the standard machine has been replaced by one with straight slots.

A mechanical cleaner[3] has been devised which eliminates the man required to remove from the grates adhering particles of blast-roasted material. The Stewart grate[4] used at several plants is self-cleaning.

At plant A, a 42- by 264-in. machine, with pallets moving at a speed of from 12 to 24 in. per minute, treats a mixture of siliceous sulphide ore (Cu 6 to 10, Fe 15, SiO_2 55, CaO 2, S 10 per cent), sulphide concentrate (Cu 12, Fe 24, SiO_2 30, S 25 per cent), and pyrite cinder (Cu 2.5, Fe 54, SiO_2 8, S 2.5 per cent), all passing through a ¼-in. screen and 10 per cent through a 40-mesh sieve, at the rate of 90 to 110 tons in 24 hr.; crude oil is used as igniter.

At plant B, a 42- by 264-in, machine, with pallets moving at a speed of from 20 to 36 in. per minute, treats flue dust (SiO_2 22 to 30, Fe 25 to 29, Al_2O_3 10 to 17, Cu 6.5 to 8.5, CaO 1.5, total S 5 to 16, sulphate S 1 to 5.5, high in As_2O_3), of which 26 per cent passes through a 100-mesh sieve and 90 per cent of the 100-mesh material through a 200-mesh sieve, at the rate of 100 to 120 tons in 24 hr., producing a sinter, usually all coarse, with 1 to 2 per cent S.

The former work at the plant of the Tennessee Copper Co. is recorded by Smith.[5] The treatment of flue dust at Mason Valley is discussed in §103.

65. The Greenawalt Pan.—This is successfully operating in several plants for sintering iron ore and, although it is not in use at any copper plants, it is a form of apparatus which would be considered in erecting a new plant. Therefore a brief description is given here.

Each unit is a cast-iron or steel pan fitted with grate bars several inches above the bottom. The pan is supported by hollow trunnions which serve to

[1] *Mining Sci. Press*, 1913, VII, 908.
[2] *Can. Mining J.*, 1913, XXXIV, 518.
[3] *Eng. Mining J.*, 1913, XCVI, 789.
[4] HOFMAN, "Metallurgy of Lead," 1918, pp. 198, 199.
[5] *Mining World*, 1910, XXXIII, 460.

connect the space below the grates with an exhaust fan. Pans are made in several sizes, the smallest being 6 by 8 ft. and the largest 10 by 24 ft. The depth of charge varies with the character of the material from 5 to 9 or more inches. The capacity of the small pan is about 1 ton per charge and of the large pan about 5 tons. The latter will treat 150 to 250 tons per 24 hr.

The plan of a single-pan installation is shown in Fig. 73. In a larger plant the pans would be placed in a row and up to ten pans could be served by one charge car and igniter. In operating the plant the material to be sintered would be brought by the conveyor from the storage bins to an elevator and

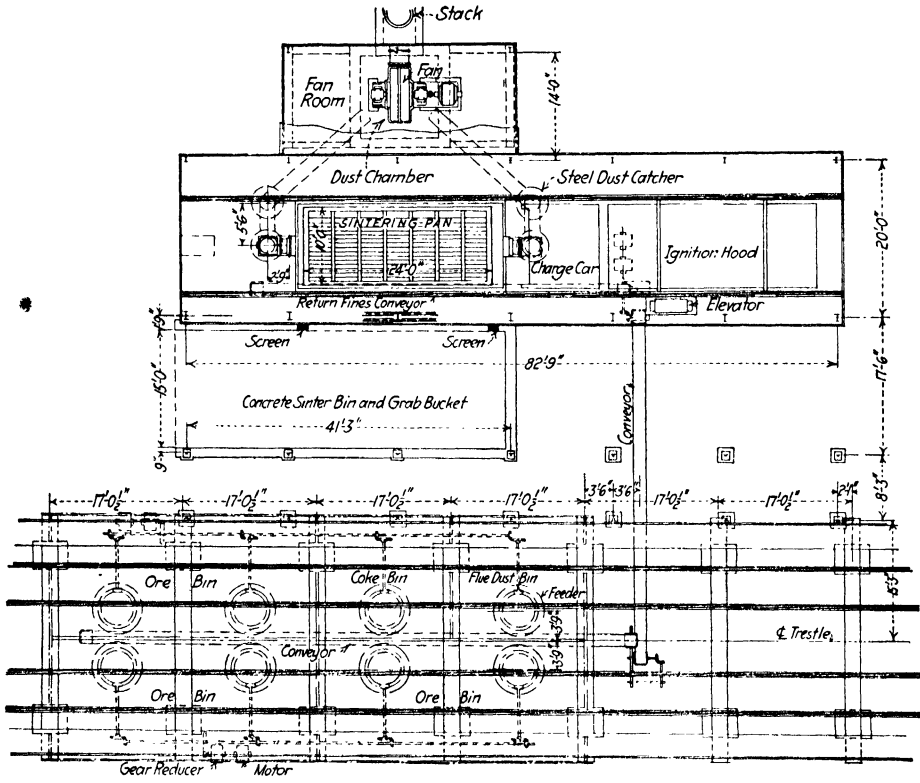

FIG. 73.—Greenawalt sintering pan with charge and sinter bins.

thence to a mixer situated above the sintering pans. Here the proper amount of moisture (8 to 12 per cent) is incorporated and the material dropped into the charge bins, from which it is drawn as needed into the charge car. The charge car moves over the pan, fills it with the mixture to be sintered, and levels it evenly with a scraper. The ignition hood is then moved over the pan and the charge ignited by means of gas or oil burners. When ignition is complete, the hood is removed and the sintering continues to completion. At the close of the operation the pan is revolved on its trunnions and the sinter dumped over a grizzly into the receiving bin. The fines from the grizzly are returned to the

operation. A weight suspended rigidly from each unit of the grate gives it a rotary motion when the pan is tipped, thus keeping the spaces open.

66. Summary of Roasting.[1]—The apparatus discussed in §55 to 65 represent the leading types which have been or are in use at various industrial plants. Some would not be built again for new plants. Thus, heaps will be used only if the ore is not suited for pyritic or partial pyritic smelting and the law allows their use; coarse-ore kilns will be confined to roasting in connection with small or experimental installations. Of the fine-ore kilns, those of the McDougall type have proved, on the whole, to be more satisfactory than the others. Mechanical reverberatory furnaces have been replaced by McDougall furnaces run with auxiliary fireplaces. Blast roasting is confined to localities in which large modern reverberatory matting furnaces are not practicable. As regards matte, blast roasting will be used where fines from crushing are to be prepared for subsequent blast-furnace smelting.

Fine-ore mechanical roasting furnaces make much flue dust, especially those having superposed hearths, such as the McDougall. As most silver-bearing ores usually contain some arsenic, the gases from furnaces roasting them will be charged with As_2O_3.

Thus the dust-free gases from a McDougall plant[2] contained at standard conditions: SO_2 2.545, SO_3 0.275, CO_2 0.1136, H_2O vapor 2.784, As_2O_3 0.073, O 14.02, N 81.18 per cent volume. Dust as well as vapor can be collected as long as the velocity and temperature of the gas current are sufficiently reduced, and the time necessary be given for settling. A current velocity of 6 ft. per second permits the collection of practically all suspended particles; for the complete condensation of vapor and of As_2O_3 the temperature of the gases must be reduced to 143 to 144° C.[3]

A screen analysis of real flue dust from Great Falls, Mont.,[4] showed that it was finer than 0.5 mm.; considering that at this plant 55 per cent of the material charged into a McDougall furnace was smaller than 0.5 mm., this furnace will produce a large part of the total made at the works.

II. Smelting in the Blast Furnace

67. The Blast Furnace and Its Accessory Apparatus in General.[5]—The blast furnaces in operation in the United States in copper smelting resemble one another so much that they are approaching standard forms, whether a reducing or a pyritic fusion is carried on; in fact, they are the outcome of furnaces developed at Great Falls, Mont.[6] They differ greatly from those in operation 35 or 40 years ago. The earlier furnaces were copies of European

[1] Dwight, *School Mines Quart.*, 1911, xxxiii, 1; *Eng. Mining J.*, 1911, xcii, 1267.
[2] Dunn, *Trans. A. I. M. E.*, 1913, xlvi, 648.
[3] Elton, *op. cit.*, 1913, xlvi, 690.
[4] Goodale, *op. cit.*, 1913, xlvi, 571.
[5] Mathewson, *Eng. Mining. J.*, 1911, xci, 1057.
[6] Church, *Trans. A. I. M. E.*, 1913, xlvi, 423.

models.[1] At first they were built of stone and brick, were square, and had a single tuyère pipe at the back; later they were made slightly oblong and had two or three tuyères at the back. When the greatest length with this arrangement of air supply had been reached, tuyères were added at the sides, and the width of the furnace was increased. In order to protect the walls of the old furnaces, blown from the back, against fusion and corrosion, the fuel used to be charged toward the front and ore with flux toward the back; smelting thus took place in the center of the furnace. With the advent of tuyères on four sides, the brick walls were protected by having water-cooled tuyères project beyond them into the furnace, when the blast passing through the nozzles would strike the carbonized fuel several inches away from the wall and cause the hottest zone to prevail nearer the center than the wall. The transition from water-cooled tuyère to water-cooled smelting zone, and later to water-cooled furnace, was gradual.

At present most copper blast furnaces for smelting sulphide ore are water-cooled throughout, as almost every furnaceman works for some pyritic effect in order to oxidize part of the S and Fe in the charge. He accomplishes this in part by forcing into the furnace a large volume of air, or by having a low charge column, or by both means. The result is that usually the heat creeps up and the top becomes hot. With the upper part of the shaft built of brick, the wall corrosions or accretions would become unmanageable, hence the water-cooled shaft, and sometimes even water-cooled parts above the feed floor. In a strictly reducing fusion, in which the smelting zone reaches only a short distance above the tuyères, the upper part of the shaft is of brick, as this material abstracts less heat than a water-cooled jacket. Water jackets at present are nearly always of soft steel, as their large sizes preclude the use of the cheaper cast iron.

The furnaces are all oblong with tuyères on the sides, as with a given limiting distance between tuyères the length can be adapted to the desired capacity. The vertical section of an oblong furnace shows that the ends are usually vertical; and that the sides either taper uniformly from throat to bottom, or only the lower sides enclosing the smelting zone taper, while the upper are vertical. The amount of bosh thus given is governed by the reducing effect to which the charge is subjected; the greater the angle of bosh the stronger the reduction.

All furnaces have a detached external crucible, and this is either fixed or movable. The disadvantages of loss of heat, and thereby of imperfect separation of matte from slag, characteristic for external crucibles of small furnaces, have been overcome in large furnaces by the large stream of molten material which often keeps the fore hearth so hot as to necessitate water cooling in order to prevent matte from breaking through the lining. The fore hearth has grown

[1] General treatises on metallurgy of BALLING, KERL, SCHNABEL-LOUIS, and others; WENDT, *School Mines Quart.*, 1885–86, VII, 174, 181, 304, 314 (Alleghanies); EGLESTON, *Trans. A. I. M. E.*, 1881–82, X, 25 (ore knob); *School Mines Quart.*, 1885–86, VII, 360 (Point Shirley, Boston); Tables in *Metallurgie*, 1905, II, 417; 1907, IV, 104.

with the size of the furnace, and sufficiently so to become a reservoir of matte for the converter. Little need be said from a general point of view about the accessory apparatus, such as slag pots, matte pots, etc.

68. The Blast Furnace in General.—The Great Falls, the Anaconda, the Cananea, and the Mount Lyell furnaces, which are the outcome of the furnace developed by F. Klepetko at Great Falls,[1] showing the leading points of a modern copper blast furnace, are discussed in §70.

The Great Falls plant no longer smelts copper ores and the blast furnaces have recently (1924) been dismantled. The description has been retained as representative of a common type.

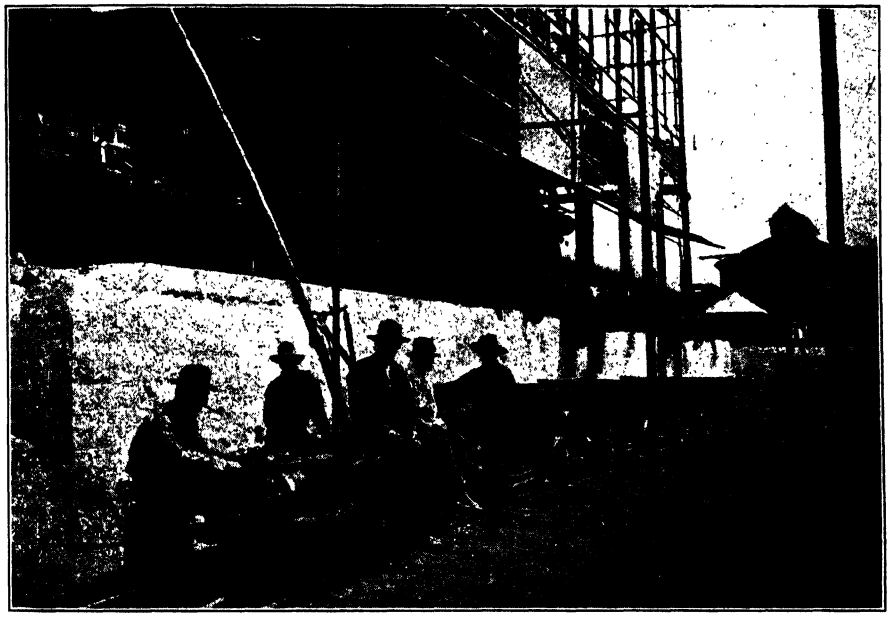

FIG. 74.—Blast furnaces, Shannon Copper Co.

69. Blast-furnace Buildings.—Every blast-furnace building has at least three floors, the feed floor, the furnace floor, and the slag or matte floor. They are shown clearly in Fig. 74, representing the furnaces of the Shannon Copper Co. The details of the feed floor vary with the manner of delivering the charges to the furnace; the distance between the feed and furnace floors is governed by the height of the furnace; the slag or matte floor has to be a sufficient distance (10 ft. more or less) below the furnace floor to admit waste-slag cars holding from 5 to 15 tons of slag, and the matte cars or matte-receiving ladles with a capacity of, say, 10 tons. If the slag is granulated, special provision has to be made to carry away the granulated material.

70. Great Falls, Anaconda, Cananea, and Mount Lyell Blast Furnaces.—The Great Falls or Klepetko (Figs. 75 to 76),[2] the New Anaconda or Mathewson

[1] CHURCH, *Trans. A. I. M. E.*, 1913, xlvi, 423.

[2] HOFMAN, *Trans. A. I. M. E.*, 1904, XXXIV, 283; CHURCH, *op. cit.*, 1913, XLVI, 423.

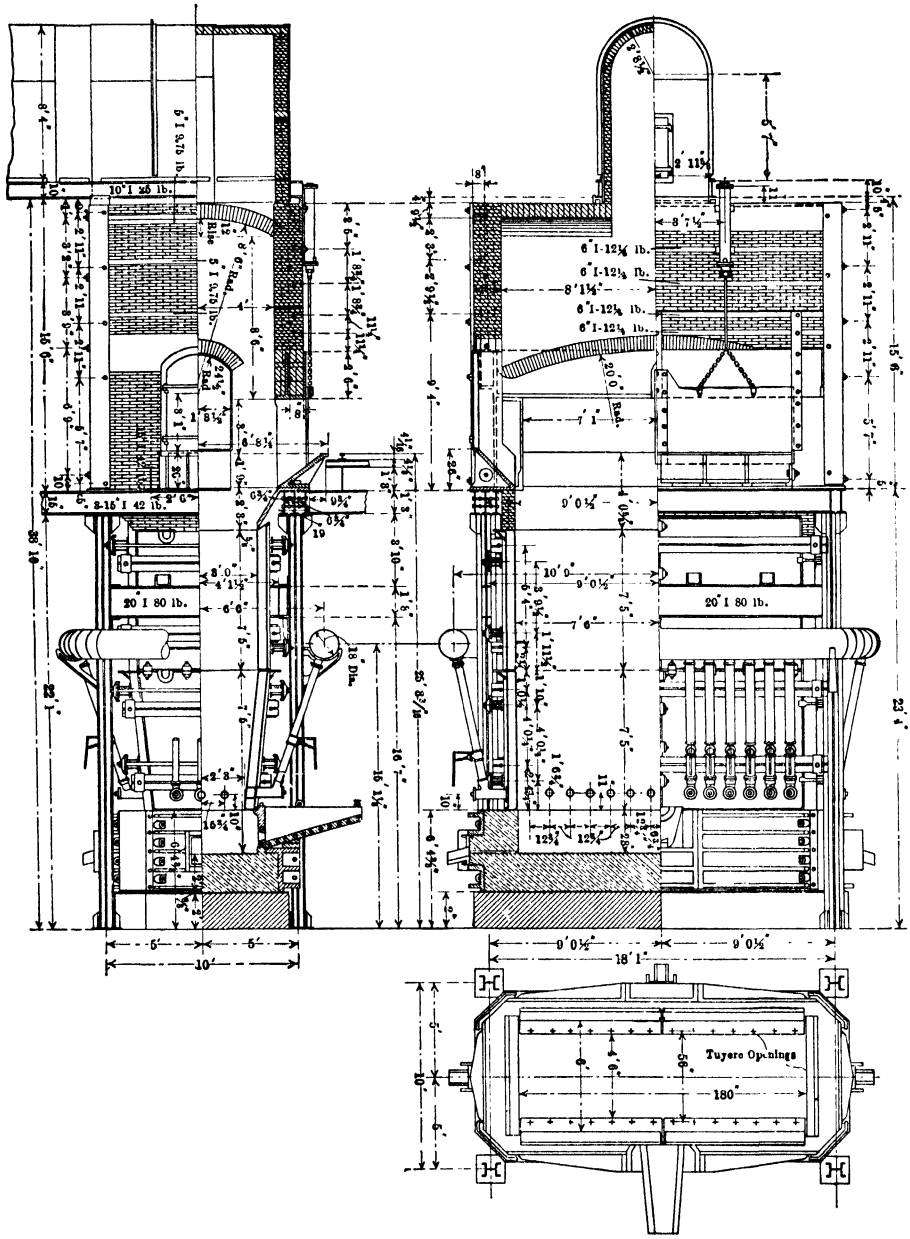

FIGS. 75–76.—Great Falls or Klepetko blast furnace.

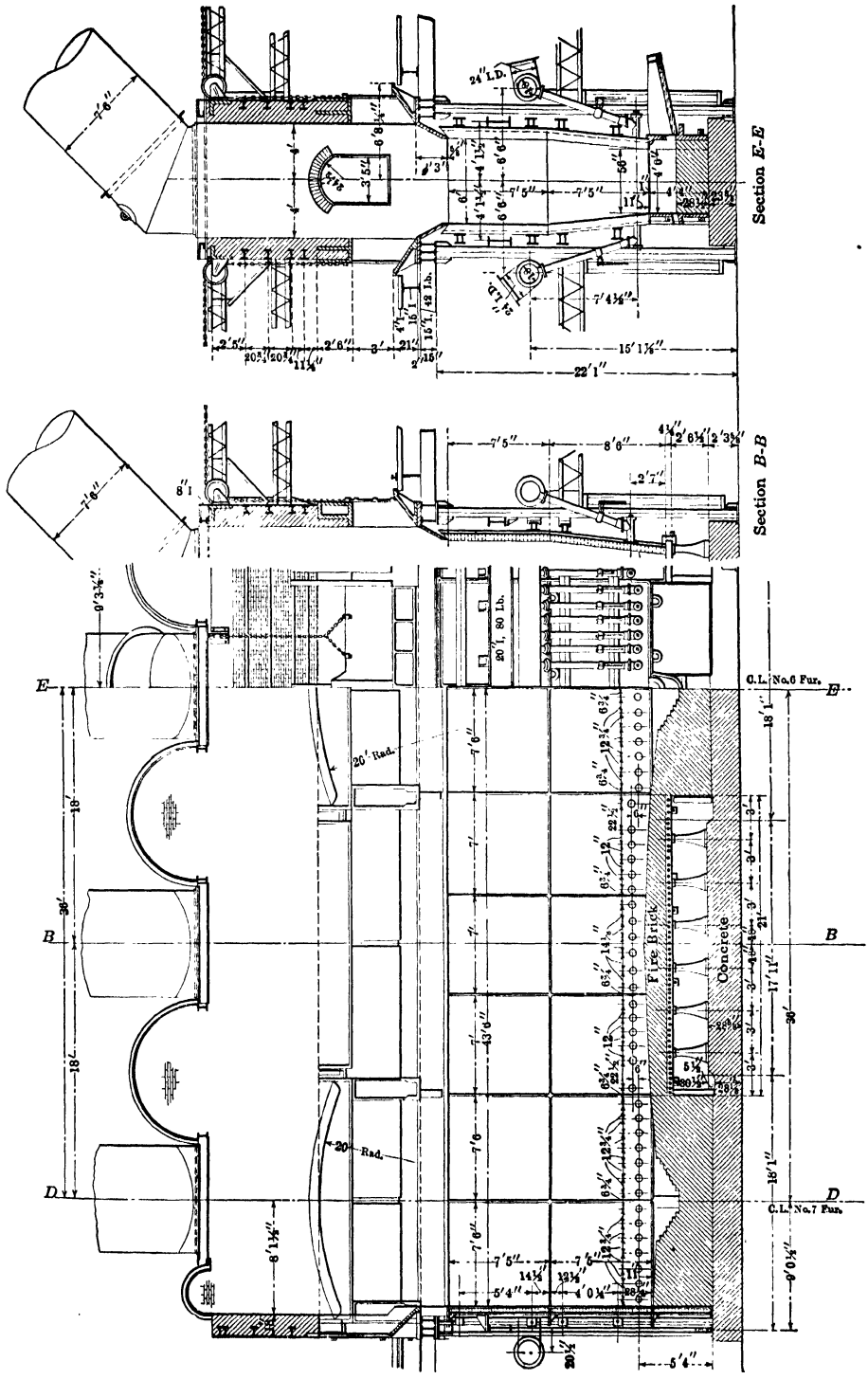

FIGS. 77–79.—Anaconda or Mathewson 87-foot blast furnace.

(Figs. 77 to 79),[1] the Cananea or Shelby (Figs. 80 to 83),[2] and the Mount Lyell (Figs. 84 to 84*a*)[3] furnaces represent the modern forms of blast furnaces.

They have this in common: they are oblong, have vertical ends, sloping or boshed sides with the necessary tuyères, a shallow crucible which discharges

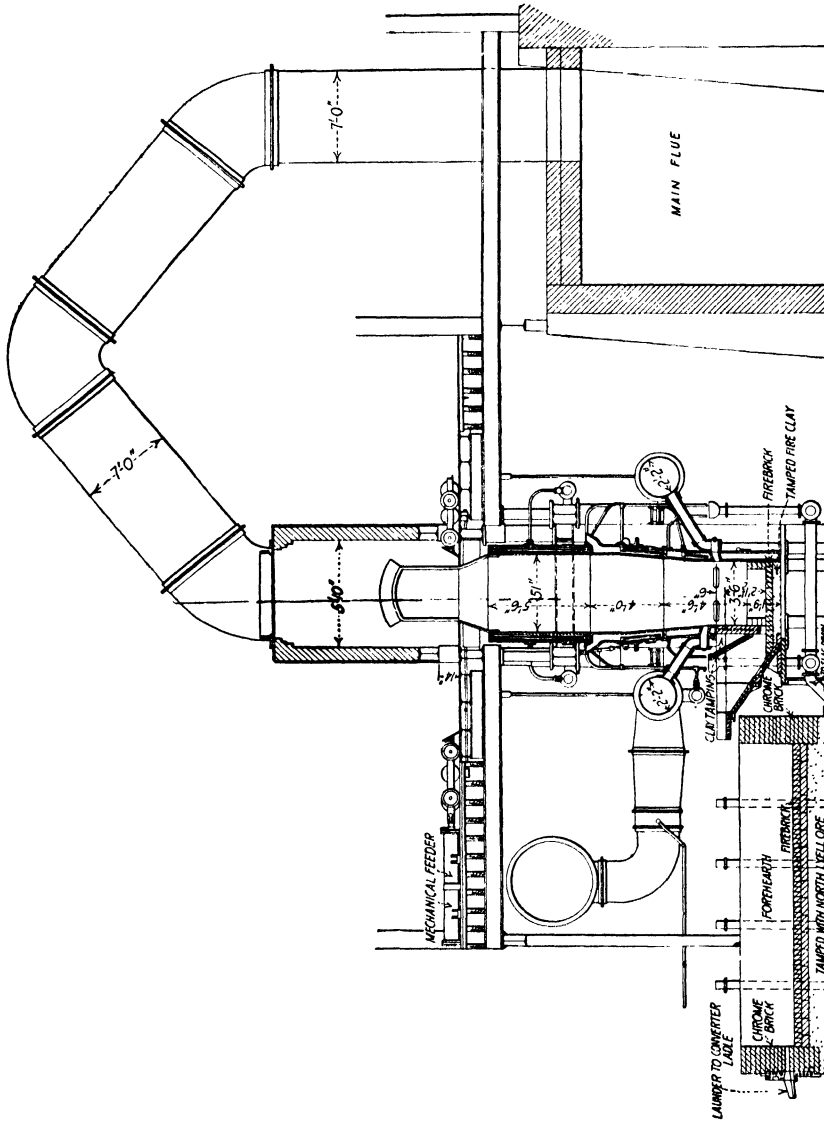

FIG. 84.—Mount Lyell blast furnace.

slag-matte mixture continuously over a raised spout trapping the blast (first used by R. H. Sticht), a large fore hearth for separating and collecting matte,

[1] MATHEWSON, *Eng. Mining. J.*, 1906, LXXXI, 370; AUSTIN, *Trans. A. I. M. E.*, 1907, XXXVII, 442; OFFERHAUS, *Eng. Mining J.*, 1909, LXXXVIII, 243.

[2] SHELBY, *Eng. Mining J.*, 1908, LXXXV, 841.

[3] Private communication, 1924.

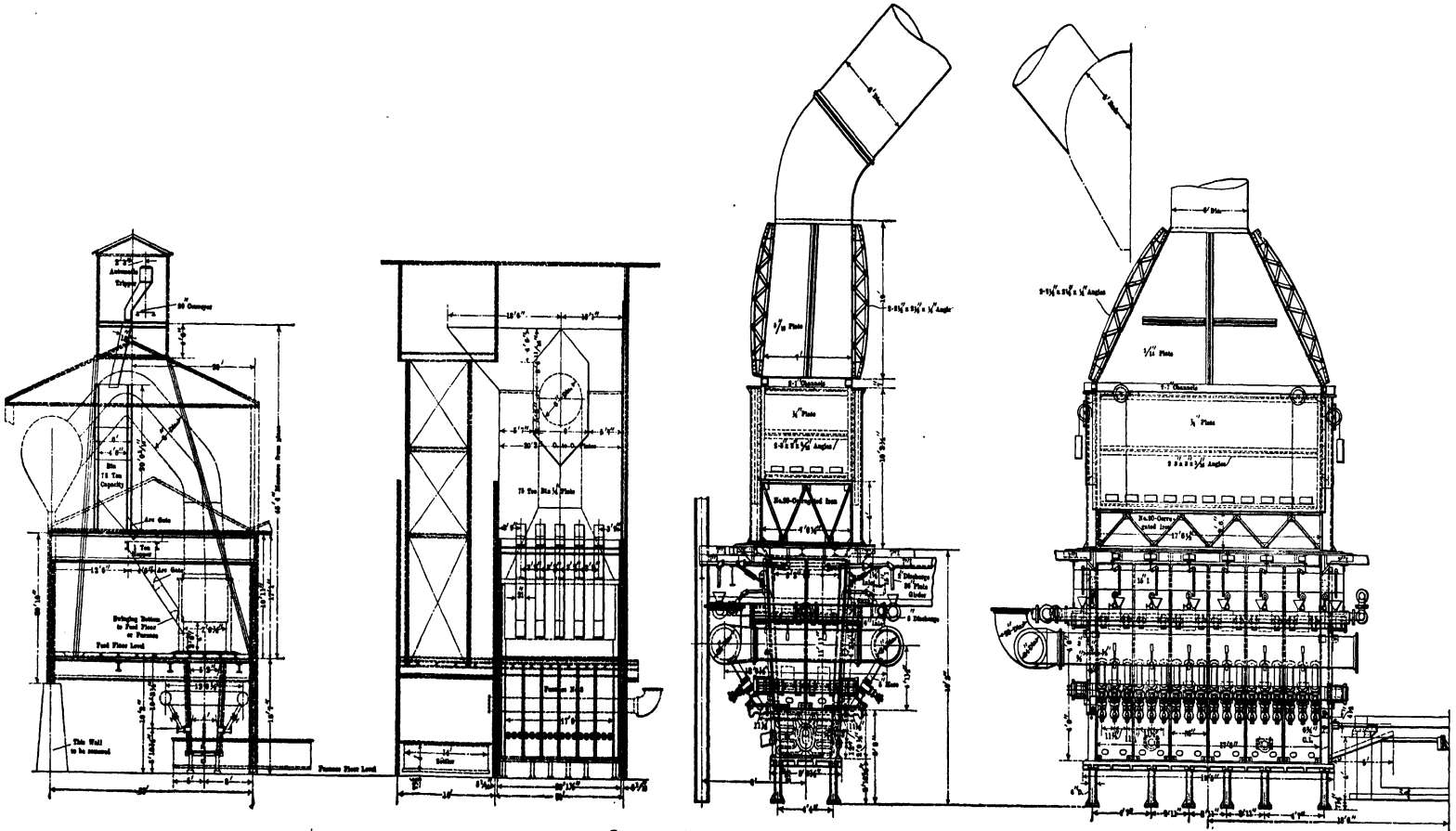

FIGS. 80–83.—Cananea or Shelby blast furnace.

(Facing p. 114)

to be tapped periodically from slag overflowing continuously into a slag car or a granulating device. Only the leading features will be briefly reviewed; the details and those of some other important furnaces are assembled in Tables XXIX and XXX.

71. **The Hearth.**—This is sometimes built up solid from the concrete foundation (Figs. 75 to 76); in most plants it is erected on ribbed cast-iron plates supported by iron posts and jackscrews,[1] the latter are sometimes carried by a steel

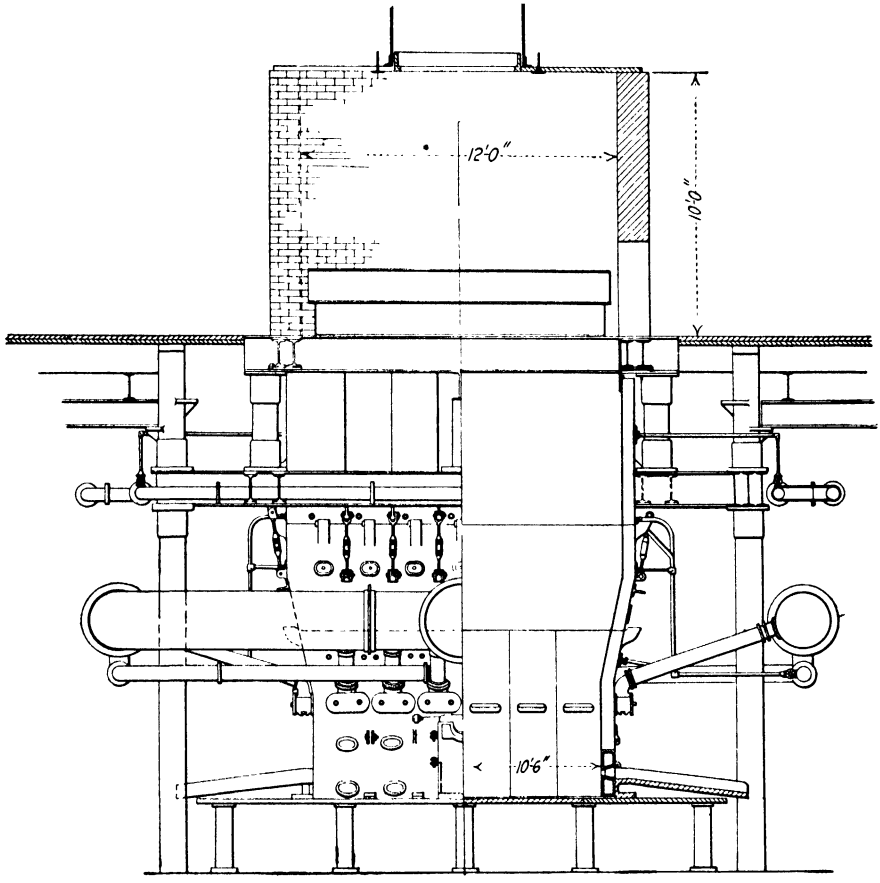

FIG. 84*a*.—Mount Lyell blast furnace.

truck. With the new Anaconda furnaces (Figs. 77 to 79), both arrangements are found, the center division being carried by jackscrews, the end divisions built up solid. The masonry of the hearth is encased by heavy ribbed cast-iron plates firmly bolted together. The jacked cast-iron bed plate supporting the bottom of the hearth usually also carries the jackets; in this case the water-cooled side walls as well as the air-cooled bottom are made thinner than with the hearth erected upon concrete, *e.g.*, side 22 in. and bottom 18 in. thick *vs.* 14 and 9 in.

[1] MATHER, *Trans. A. I. M. E.*, 1903, XXXIII, 675.

Sometimes the bottom plates of the hearth contain pipe coils for water cooling. The refractory material used for lining used to be exclusively fire brick. The corrosive action of hot matte not too high in Cu has been in some cases the cause of replacing fire brick by silica brick or chrome brick,[1] but chrome brick have been found unsatisfactory since they absorb matte very readily and attempts to recover the copper from old linings have not been successful. An analysis of the chrome brick used at Garfield gave: Cr_2O_3 45.1, SiO_2 6.9, FeO 14.0, CaO 0.5, MgO 17.0, Al_2O_3 11.6. The brick, usually laid both end- and sidewise, are stepped down from near the level of the tuyères to the bottom and give the crucible a trough-like shape.

The trapped spout[2] for the continuous flow of slag matte is situated at one side (Figs. 75 to 76) or one end; sometimes there are spouts at both ends. For emptying the furnace, there is a tap hole, sometimes water-jacketed, at the lowest point of the crucible or in the spout.[3] With the new Anaconda furnace (Figs. 77 to 79) having a tuyère section 56 by 612 in. the bottom of the hearth slopes from the center toward the ends, where are situated crucibles from the deepest points of which the slag-matte flows out at one side over two spouts. Each crucible has a tap hole to empty the furnace. The latest furnace 56 by 1,044 in., has three continuous discharges.

At Humboldt, Ariz.,[4] the capacity of the furnace was increased by bricking up the crucible to within 3 in. of the tuyères, in a 14-ft. furnace a capacity of 10 tons per square foot of hearth area was obtained, using 9.3 per cent coke. The charge was ore, converter slag, and limestone. The matte ran 38 per cent Cu.

Many materials have been tried in the construction of the water-cooled tymp and discharge spout. The tymp is made usually either of cast iron or of copper,[5] sometimes of fire clay,[6] which requires frequent renewal.

72. The Shaft.—The width of the oblong shaft at the tuyère level shows a range of from 42 to 56 in., the length from 150 to 612 and even 1,044 in. with the latest Mathewson furnaces at Anaconda. The advantages of increasing the length of a furnace are saving of end jackets, diminution of loss of heat by radiation and hence saving of fuel, and increase of regularity in operation and of smelting power. The investigations of Roberts[7] at Great Falls give numerical data for the fact that the saving in radiating surface by lengthening a furnace, and thereby diminishing for a given area the surface occupied by the end jackets, takes place at a rate which decreases as the furnace grows in length. The corollary is that the heat units carried away by the cooling water of the jackets decrease at the same rate. This is the reason why Great Falls adhered

[1] LANG, *Eng. Mining J.*, 1897, LXIII, 89; PACKARD, *op. cit.*, 1897, LXIII, 159; GLENN, *Trans. A. I. M. E.*, 1901, XXXI, 374.

[2] POUPIN, *Eng. Mining J.*, 1912, XCIV, 785.

[3] CHURCH, *Trans. A. I. M. E.*, 1913, XLVI, 436.

[4] BRUNTON, *Eng. Mining J.*, 1917, CIV, 255.

[5] HIXON, *Eng. Mining J.*, 1904, LXXVIII, 992.

[6] United Verde Copper Co., VAIL, *Eng. Mining J.*, 1913, XCVI, 341.

[7] *Trans. A. I. M. E.*, 1913, XLVI, 445.

to 15 ft. as a standard length of the tuyère section. However, at Anaconda, with a length of 87 ft., the saving in fuel was from 10 to 15 per cent; in addition, there was a reduction of floor area of 50 per cent, and of labor of 25 per cent.

The increase in area from tuyère to throat of furnace, 1:1.30 to 1.60, is accomplished either by a bosh or by gradual enlargement. The Great Falls (Figs. 75 to 76) and Anaconda (Figs. 77 to 79) furnaces have a bosh of 1 in. per foot for a distance of 7 ft. 5 in.; the rest of the shaft is vertical. The Cananea (Figs. 80 to 83) and most other furnaces show a gradual enlargement. The Mount Lyell furnace (Figs. 84 to 84*a*), has vertical sides for a distance of 18 in., followed by a bosh 48 in. high with a total deflection of 4.5 in.; the rest of the shaft is vertical. The arrangement at Granby, B. C.,[1] is similar. At Keswick, Cal.,[2] cast-iron lower jackets, similar to the Mount Lyell, and steel upper jackets were used.

The working height or smelting column is usually from 10 to 14 ft.; the level of the top of the charge is adapted to the coarseness of the mixture. Usually the sides of the furnace are built of two tiers of fire-box steel-plate jackets. The upper jackets either rest directly upon the lower (Figs. 75 to 76), or they are suspended by hangers from I-beams (mantle frame) which carry the structure above the feed floor (Figs. 80 to 83). Upper and lower jackets are sometimes separated by a course of brick. The jackets are braced by longitudinal I-beams bound by tie rods. The space between the tops of the upper jackets and the feed floor is usually covered by cast-iron mantle plates which receive the impact of the charges as they are fed into the furnace. The water jackets[3] are now nearly always flanged steel plates. The inner or fire plate is made heavy, ½ to ⅞ in. thick, to prevent buckling or warping,[4] the outer ⅜ in. thick; the former receives its support by distance pieces, riveted to the outside plate, and offers a smooth strong surface to the descending charge. Stay bolts on the inside plate, which used to burn off or be knocked off in barring or be attacked by corrosive material settling at the junctions of bolts and jacket, especially along the tops of the upper row, have become almost obsolete. The flanges of the inner and outer plates are joined usually by riveting, sometimes by welding. The inner plate of a jacket appears to become more quickly corroded than the outer.[5] Many reasons and remedies have been suggested for the peculiar phenomenon.

At the smelter of the Canadian Copper Co.,[6] considerable trouble was experienced with the lower tier of steel jackets, holes being burnt into them by the strongly corrosive action of the matte. They were replaced in 1908 by thin cast-iron jackets enclosing water-cooled wrought iron pipe coils. They resist the action of the matte and last as long as 9 months. When failure does

[1] LATHE, *J. Can. Mining Inst.*, 1910, XIII.

[2] KELLER, *Mineral Ind.*, 1897, VI, 232.

[3] *Eng. Mining J.*, 1904, LXXVII, 595 (WETHEY); 797 (LLOYD); 1908, LXXV, 844 (SHELBY); 1911, XCI, 653 (RICE); 1913, XCV, 612 (HOLTHOFF).

[4] RICE, "Straightening of Warped Jackets," *Eng. Mining J.*, 1911, XCI, 653.

[5] LEE, *Trans. A. I. M. E.*, 1907, XXXVIII, 877; Discussion: 878, and 1908, XXXIX, 806.

[6] REEDER, *Mines Minerals*, 1911–12, XXXII, 55.

take place, it is by cracking along a weak spot. The pipes are blown out from time to time with compressed air to remove any sediment that may have been deposited by the cooling water.

The tuyère stock in common use consists of a cast-iron tuyère box (Figs. 75 to 76) firmly attached to the jacket and connected by a sheet-iron pipe, having a gate valve,[1] with the bustle pipe.

73. Feeding of Charge and Withdrawal of Gases.—Furnaces treating as much as 150 or even 200 tons of charge in 24 hr. may be fed by hand; usually furnaces with such a tonnage are fed by mechanical means, although some furnacemen[2] adhere to hand feeding with a smelting capacity of 350 tons. The distribution of coarse and fine components of the charge between side and

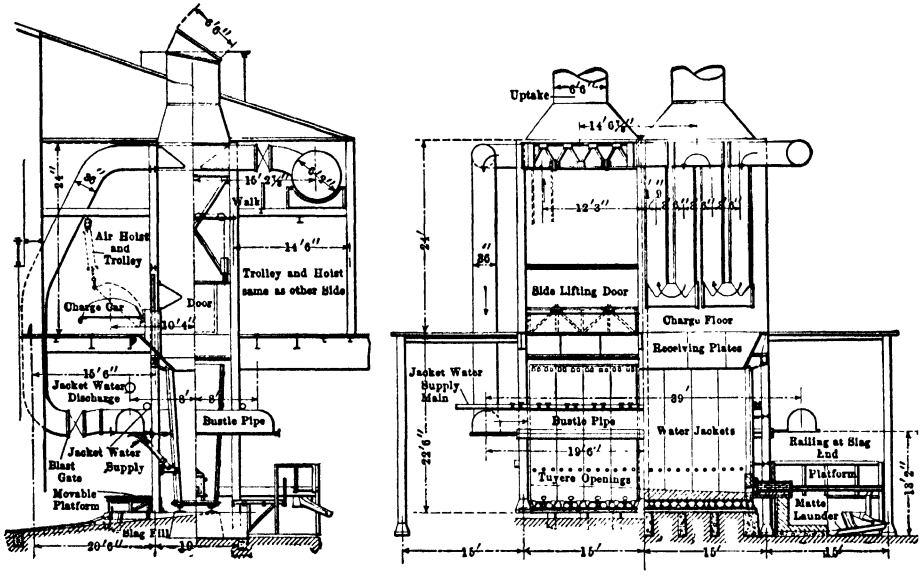

FIGS. 85–86.—Blast furnace of United Verde Copper Co., Clarkdale, Ariz.

center, though probably not so well regulated in mechanical as in hand feeding, is sufficient to give a filling through which the gases will ascend in the manner desired. Four methods of mechanical feeding may serve as examples.

In the former operation of blast furnaces at the Great Falls[3] and Anaconda works,[4] a charge train was brought by electric or compressed-air traction in flat side-tip cars alternately to one side and the other of the furnace, the doors were raised by compressed air, the cars tilted by the same means, and the charges slid in. The coke was brought in two-wheel barrows of 30 cu ft. capacity holding 900 lb. coke, and emptied into the furnace. By drawing from the bins into a charging car first the fine and then the coarse ore, the latter will

[1] SHELBY, "Details of Cananea Tuyère Valve," *Eng. Mining J.*, 1908, LXXXV, 848.
[2] JOHNSON, *Eng. Mining J.*, 1902, LXXII, 251.
[3] HOFMAN, *Trans. A. I. M. E.*, 1904, XXXIV, 289.
[4] AUSTIN, *op. cit.*, 1906, XXXVII, 447, ill.

be projected toward the center of the furnace while the fine gliding, will fall nearer the side. Varying the distance of top of charge to feed floor also serves to regulate the distribution of coarse and fine. The vertical sections through the blast furnaces of the United Verde Copper Co., Clarkdale, Ariz. (Figs. 85 to 86), provided with Giroux hot-blast tops, show the charging car ready to deliver its contents into the furnace.

At the Granby smelter, Grand Forks, B. C.[1] (Figs. 87 to 88), side-discharge duplex feed cars are used which have four compartments and are provided with two sets of wheels, the lower for usual locomotion, and the upper for travel on rails set in the side walls of the furnace. A train of three cars holding 1.25 tons of coke or 10 tons of charge is brought to the feed floor by a 30-hp. electric locomotive and to the end of a furnace having a throat 64.5 by 266.5 in.; the end doors are raised and the cars pushed in. The upper wheels rise on the slanted ends of the furnace rails and, on entering, lift the cars. When in place, the contents are discharged from the outside by means of an operating handle

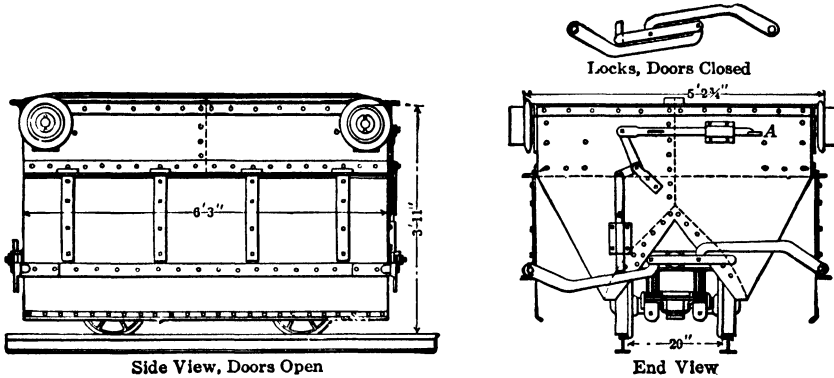

FIGS. 87–88.—Charging car of Granby smeltery.

which releases the locks. The empty cars are pulled out of the furnace at the opposite end to be refilled from the ore bins.[2] One locomotive serves two furnaces.

At Ducktown, Tenn., the Freeland charging machine[3] has been used. Its leading feature is a truck with steel frame carrying an endless belt holding the charge. Both truck and belt have electric motors which move the truck over the throat of the furnace and drop the charge.

At the Cananea smelter (Figs. 80 to 81) the smelting mixture, gathered up from the bedding floor, is delivered at the top of the building by a 20-in. belt conveyor and discharged by an automatic tripper into the 75-ton storage bin from which the material is withdrawn as needed into five 1-ton hoppers placed along one side of the furnace and closed by arc gates. The chutes from the hoppers permit delivering the ore mixture either into the furnace over a

[1] SACKETT, *Mines Minerals*, 1910, XXX, 524; LATHE, *J. Can. Mining Inst.*, 1910, XIII, 273; Editor, *Eng. Mining J.*, 1910, XC, 499.

[2] "Ore Bins of the Dominion Smeltery," *Eng. Mining J.*, 1906, LXXXI, 1043.

[3] RENWICK, *Mining Sci. Press*, 1913, CVI, 443.

sloping cast-iron plate or onto the feed floor. The bulk of the charge is run in direct, a small part is shoveled in for correcting irregularities and keeping the surface properly trimmed. The furnaces at Teziutlan[1] have a similar feed.

It has been pointed out by Gillis[2] that large lumps of ore should not be charged in the blast furnace and that the usual practice of mixing coarse and fine material tends to minimize the voids and thus makes for a tight charge.

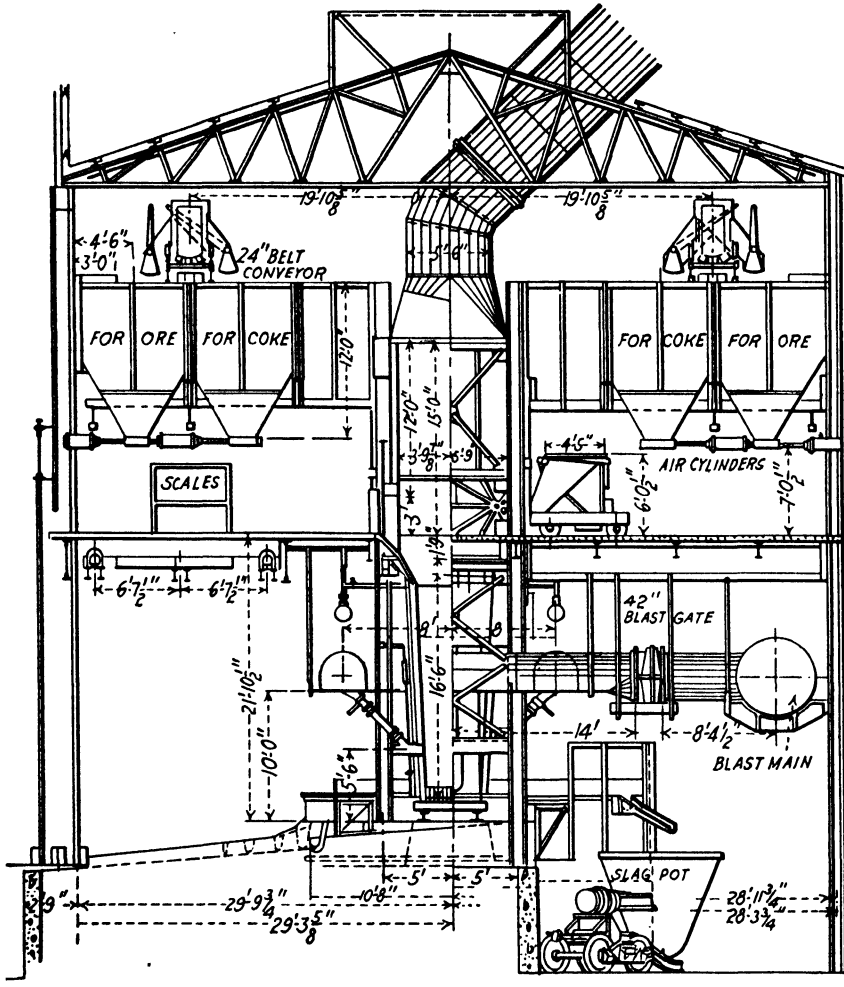

FIG. 89.—Blast furnace and charging system at the Calumet and Arizona smelter.

If, instead of mixing all sizes, they were charged in separate layers, increased permeability of the charge and consequent improved smelting conditions would result.

At Mount Lyell (Figs. 84 to 84*a*), the charges are dumped on the cast-iron plates in front of the feed doors, and then pushed in mechanically.

[1] ROBINSON, *Eng. Mining J.*, 1910, LXXXVIII, 655.

[2] *Eng. Mining J.*, 1921, CXII, 175.

The charging system used by the Calumet and Arizona smelter is shown in Fig. 89. The ore and coke are brought by belt conveyors to bins above the charge floor. From these they are drawn into charge cars, which are as long as the furnace. Having received its charge, the car is moved on rails to the furnace and emptied.

With side-fed furnaces, the feed opening usually occupies the entire length of the furnace; it is closed by a single (Cananea), by two (Great Falls) or more (Anaconda) balanced sheet-iron doors raised by compressed-air cylinders. Often there is an additional door at either end (Great Falls, Anaconda). With the end-fed furnace, as at Granby, there are narrow side doors to furnish access for barring down and other purposes.

The gases are usually withdrawn from the furnace by means of a goose neck leading into a dust chamber or a sheet-iron balloon-shaped flue. The structure carrying the downcomer used to be exclusively of brickwork; in some instances it has been made of sheet iron, air-cooled and even water-cooled in order to prevent hot particles of flue dust from combining with hot brickwork and forming heavy incrustations; any thin crusts formed on iron easily flake off. The Great Falls and Anaconda furnaces have brick superstructures; the Cananea, sheet-iron air-cooled; the Mammoth,[1] sheet-iron water-cooled.

73. The Fore Hearth or Settler.—In a modern large-size blast-furnace plant the matte produced usually goes direct to the converter; hence the fore hearth serves not only as a separator of matte from slag, but also a holder of matte from which as many as 10 tons are tapped at intervals into ladles and conveyed to the converting department. Direct-matte plants, therefore, have large settlers, while smelters, producing matte that is to be tapped into molds and allowed to solidify, are better served by medium-size or even small settlers.

A large settler is a fixed circular or oval boiler-iron shell, lined with refractory material, which usually has one slag overflow and two matte taps.

The settler of the Tennessee Copper Co., with two slag lips and two matte taps, is shown in Fig. 90.

The settler was formerly lined with a siliceous ore mixture, but refractory brick is used at present.

The bottom of the circular fore hearth at Anaconda, 16 ft. in diameter, 5 ft. high, and of ½-in. steel, is paved with silica brick, 12 by 6 by 3 in., set on end, and then covered with a layer of crushed quartzite; the shell is lined with 15 in. of silica brick backed by 4 in. of crushed quartzite.

The bottom of the oval fore hearth of Cananea, 22 ft. 6 in. long by 14 ft. wide by 4 ft. deep, and of ¾-in. steel, is lined with 10 in. of fire brick, 2½ in. of which are replaced by chrome brick underneath the spouts and around the tap-holes; the sides are lined with 9 in. of chrome brick backed by 12 in. of ganister. On top of the side lining is built a wall of clay, 21¾ in. wide and 16 in. high, which increases the height of the settler from 4 to 5 ft. 4 in.

A section through the Mount Lyell settler is shown in Fig. 84.

[1] *Mining Sci. Press*, 1908, XCVI, 30; *Mining World*, 1908, XXIX, 309; 1909, XXXI, 311.

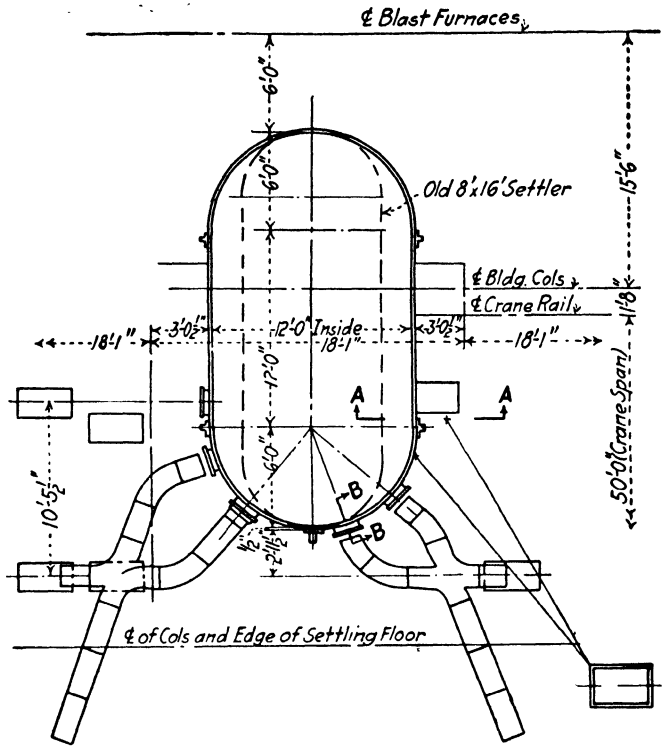

FIG. 90a.—Settler at the Tennessee Copper Co.

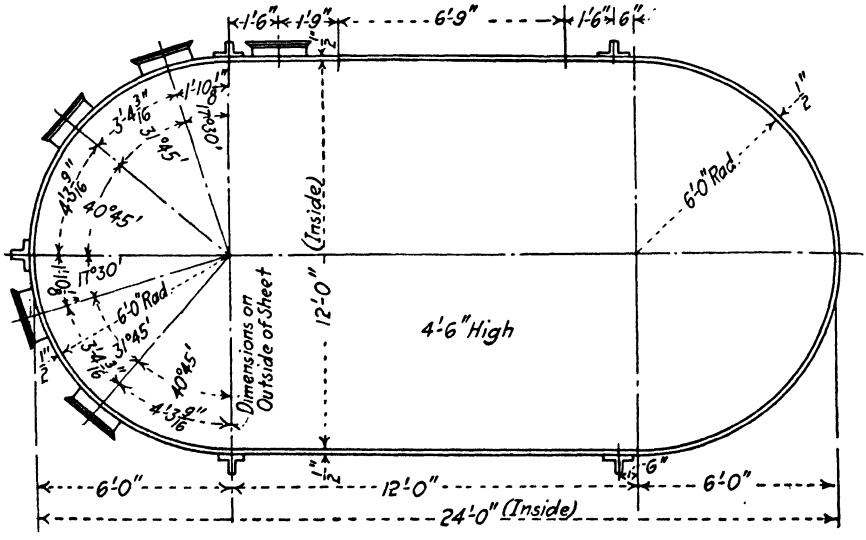

FIG. 90b.—Settler at the Tennessee Copper Co.

The drawings of fore hearths show that the matte tap is an oval slot backed by a block, which is either cast-iron or preferably copper, and contains the taphole. Hixon[1] recommends for the cutting 40 per cent Ni-Cu matte a carbon block, made of electric-light carbon, 5 in. thick with a 2-in. bore, protected by a cast-iron plate.

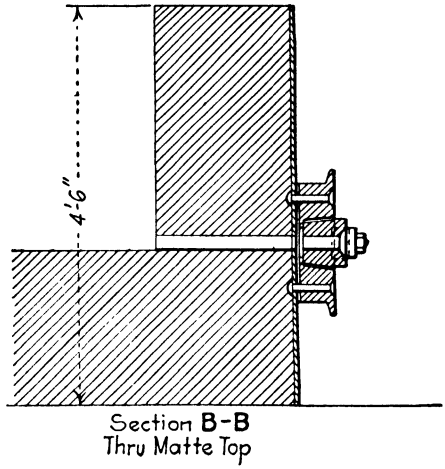

FIG. 90*c*.—Settler at the Tennessee Copper Co.

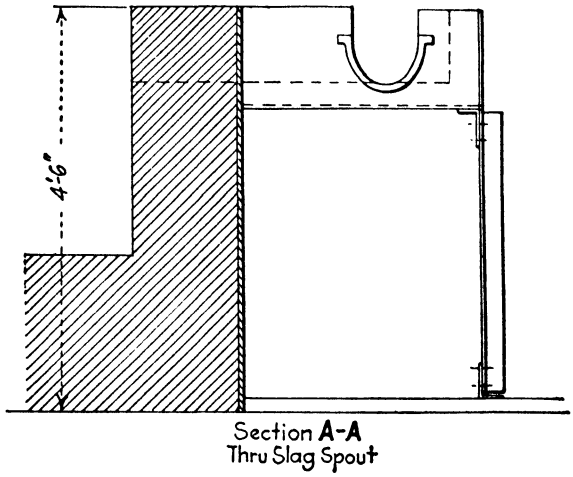

FIG. 90*d*.—Settler at the Tennessee Copper Co.

The taphole is stoppered with a clay plug pushed in firmly with the rod (dolly) and driven home by a few gentle strokes of a hammer. In order to facilitate the tapping later on, the tapping bar is driven through the soft clay plug until it reaches the hardened interior. It remains in this position until the next tap.

[1] *Eng. Mining J.*, 1905, LXXX, 673.

75. Disposal of Waste Slag.—The waste slag is disposed of either by collecting in pots which are hauled singly or in trains to the dump by steam, compressed air, or mostly electric power,[1] and poured; or the slag is granulated by a jet of water under suitable head impinging upon it, and then carrying it either to the dump or into a river.[2] The slag cars vary in size and construction. Figure 91

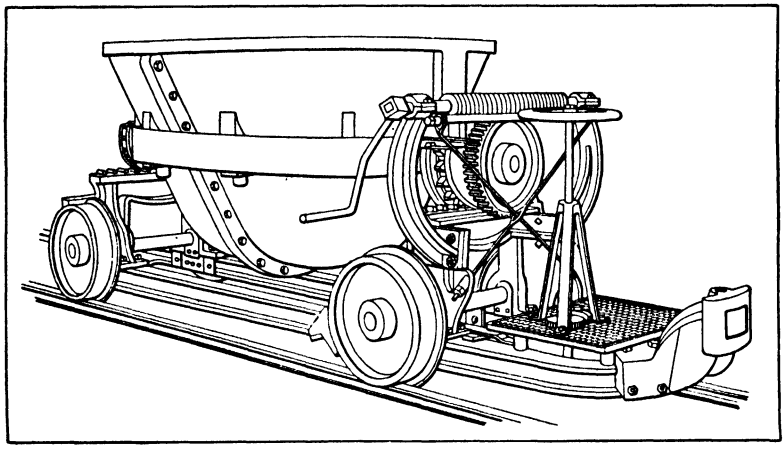

FIG. 91.—Waste-slag car.

represents a car of the Traylor Engineering Co., made in sizes to hold from 5 to 15 tons. The bowl, of cast steel, is made in two sections. Frequently, there are five sections,[3] the bottom and four side sections, all flanged and bolted together.

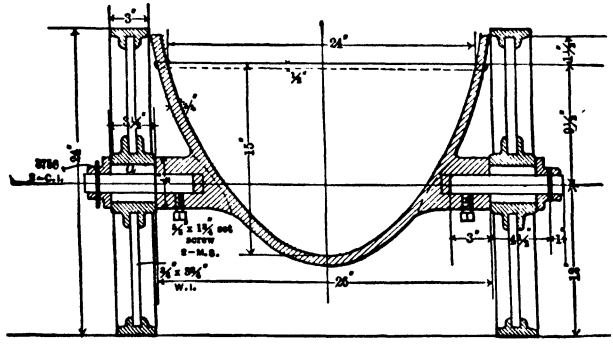

FIG. 92.—Waste-slag pot.

The bowl is supported by a steel ring riveted to pinion-toothed trunnions which roll on a rack track. In Fig. 91, the bowl is dumped by a worm gear;[4] with small bowls, dumping by lever is not uncommon; large bowls are frequently tilted electrically or by means of compressed air or by a spring lever.[5]

[1] Slag car of Tooele, Utah: *Eng. Mining J.*, 1913, XCV, 617.

[2] HIXON, "Granulation of Slag at Mond Nickel Works, Ontario," *Eng. Mining J.*, 1906, LXXXII, 553; BERGWITH, "Granulating Process," *Eng. Mining J.*, 1913, XCVI, 55.

[3] REEDER, *Mines Minerals*, 1910, XXXI, 149.

[4] Slag car of Tooele, Utah: *Eng. Mining J.*, 1913, XCV, 617.

[5] SHELBY, "Slag Car of Cananea," *Eng. Mining J.*, 1909, LXXXVII, 204.

The Jones-Bennetts pot[1] of the Tacoma Smelting Co. has a scoop-shaped bowl.

At Greenwood, B. C.,[2] an auxiliary tilting slag bowl, 4 to 5 ft. in diameter and 2 ft. deep, is swung under the slag spout of the settler during the period of changing the Pollock slag pots,[3] and thus spilling of slag avoided.

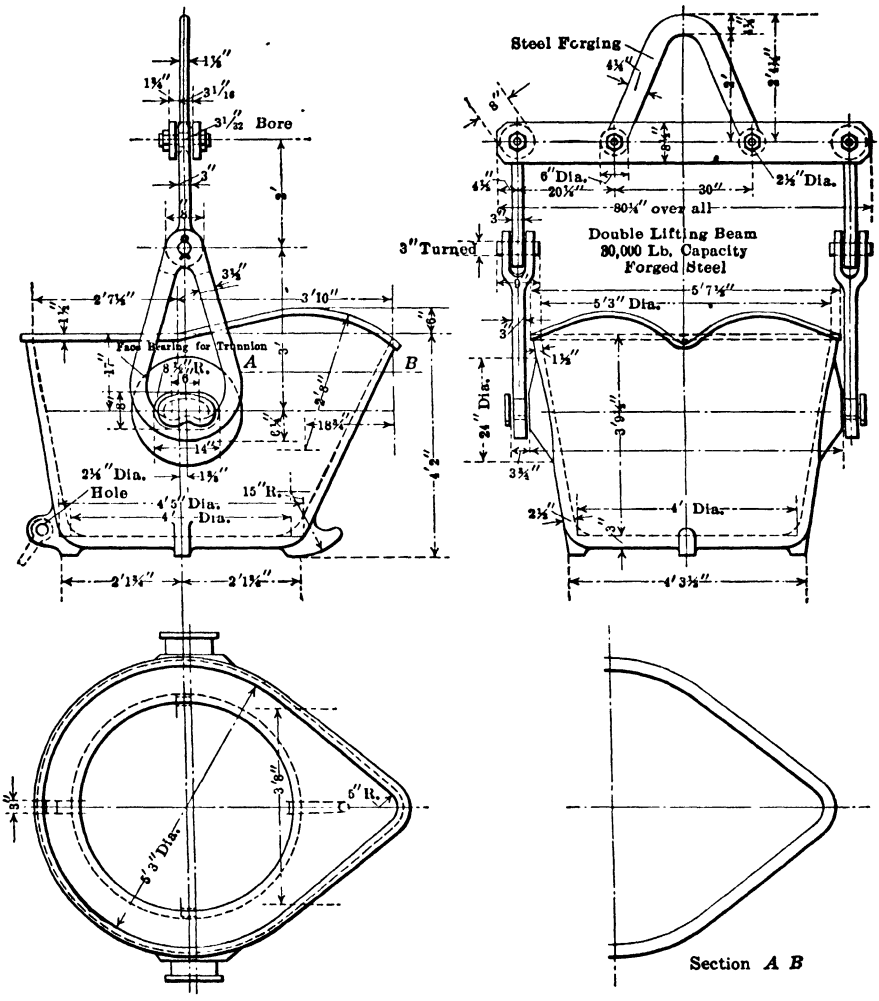

FIG. 93.—Shelby double-trunnion matte-ladle.

Cast-iron slag pots, similar to the one shown in vertical section in Fig. 92, serve the purpose of collecting about 500 lb. of slag.[4]

[1] JONES and BENNETTS, *Trans. A. I. M. E.*, 1906, XXXVI, 223.
[2] Editor, *Eng. Mining J.*, 1910, LXXXIX, 904; MCALLISTER, *op. cit.*, 1911, XCI, 1011.
[3] *Eng. Mining J.*, 1911, XCI, 660.
[4] KELLER, *Trans. A. I. M. E.*, 1893, XXII, 575, 675 (NEILL).

Slag-casting machines, such as the Bennetts,[1] at the Tacoma blast furnaces, are exceptional with blast furnaces, but not uncommon with converters.

76. Disposal of Matte.—The matte is collected from the fore hearth in ladles made of heavy steel plate or cast steel stiffened to withstand the strains; spout and trunnions are of cast steel. Single-trunnion ladles are made in sizes to hold from 5 to 10 tons of matte; they are either suspended from an overhead traveling crane or supported by a car as is a slag bowl. The Shelby double-trunnion ladle, represented in Fig. 93, is used at Cananea and Cerro de Pasco; it has the advantage over the single trunnion that it is always in balance whether full or empty.

In some cases a ladle is lined with ganister; generally, however, it is first used as a slag ladle when the skull of adhering slag forms a protective coating.[2] If matte is to be allowed to solidify, it is tapped into sand or iron molds; special forms to facilitate handling have come into use, such as those of Rhodes,[3] Bennett,[4] and Kilker.[5]

As an example of the distribution of the principal constituents of a charge among the various products, the work of the Calumet and Arizona smelter[6] is given in Table XXIX.

TABLE XXIX.—BLAST-FURNACE PRODUCTS AT CALUMET AND ARIZONA SMELTER

	Charge average, per cent	Slag average, per cent	Matte average, per cent	Flue-dust average, per cent
Silica	22.2	35.3	.....	20.9
Alumina	5.3	9.4	.....	8.0
Iron (Fe)	25.9	....	40.0	28.6
Iron (FeO)	....	37.8		
Lime	5.9	9.0	.....	2.4
Sulphur	13.1	....	25.3	9.1
Copper	5.20	0.41	28.81	5.0

77. Blast-furnace Table.[7]—In Tables XXX and XXXI are assembled the principal constructive features and working results of some of the leading blast furnaces. The first table is a reproduction of that given in the first edition of this book (1913); the second refers to new data. Other facts are brought together in the selected literature.[8] The abstracts in Mineral Industry by L. S. Austin give additional information.

[1] AUSTIN, *Mining Sci. Press*, 1907, XCIV, 282.

[2] "Matte Car and Conveyor, Mammoth Smeltery," *Eng. Mining J.*, 1911, XCII, 675, 832, 932.

[3] BRADEN, *Trans. A. I. M. E.*, 1896, XXVI, 46.

[4] BENNETT, *Eng. Mining J.*, 1908, LXXXV, 252.

[5] HAVARD, *Eng. Mining J.*, 1909, LXXVII, 1294.

[6] *Mineral Ind.*, 1918, XXVII, 213.

[7] BORCHERS, *Metallurgie*, 1905, II, 419; 1907, IV, 104; RALLI, *Rev. Un. Min.*, 1911, XXXIV, 216; PETERS, "Practice of Copper Smelting," 1911, p. 146.

[8] Balaklala Consolidated Copper Co., MAUCH, *Mines Minerals*, 1908, XXVIII, 411; "Report," *Eng. Mining J.*, 1909, LXXXVII, 504; MARTIN, *Mining Sci.*, 1911, LXIII, 338.

Blagodatny Smeltery: ORTIN and LANGE, *Metall u. Erz*, 1913, X, 543,586,612.

Table XXX.—Details of Principal Blast-furnaces for Treating Copper Ores.

	Mansfeld Krug Works	Mansfeld Koch Works	Oker	Nichols Copper Co.	Mt. Lyell	Mammoth Smelter, Cal.	Balaklala Con. Copper Mfg. Co.	Tennessee Copper Co. Matte concentration			Tennessee Copper Co. Ore-smelting			Duektown Sulphur Copper Iron Co.	Deadwood & Delaware Smelter	Horsehoe Min. Co., Rapid City, S. D.	Tyee Copper Co., 1907	Granby M. S. & R. Co.	British Columbia Copper Co.	Inspir Cal. & Silver City, N. M.	Bully Hill Copper M. & S. Co.	Shannon Copper Co.	Copper Queen Con. Min. Co.	Cos. Arizona Copper Co.	B. & M. Reduction Wks.	Anaconda Copper Mining Co. Small Furnace	Anaconda Copper Mining Co. Large Furnace	A. S. & R. Co. Garfield, Utah	Cananea Con. Copper Co.	A. S. & R. Co. Aquas Calientes	Mason Valley Mines Co.
Total section at throat, inches	83 diam.	63 diam.	98" diam.	60×160	63×231	66.5×1.80	72×240	72×180	72×180	72×180	72×270	72×270	72×270	72×280	60×144	60×144	62.5×120	64½×266½	68×360	54×156	60×300	68×360	60×240	72×170	72×180	72×672	72×1,044	66×240	84×110	60×130[1]	84×300
Total throat, square feet	82.6	.....	70" diam.	46×160	84×210	50×1.80	86×240	44×180	44×180	36×180	56×270	48×270	36×270	60×280	36×144	38×144	42×120	44×266½	48×360	42×300	48×300	48×360	44×240	48×170	36×180	56×672	36×1,044	42×240	48×110	44×130	47×300
Total tuyères, square feet	37.2	.....	34.32	51.11	78.75	62.50	93	55	55	70	105	90	105	105	116.66	36	38	35	81.5	120	45.5	63.9	120	72.25	56.66	70	238.12	405.40	70	70	47.75	98
Throat to hearth area	1.00	.....	1.38	1.30	1.28	1.33	1.29	1.64	1.64	1.28	1.28	1.28	1.28	1.20	1.66	1.6	1.5	1.45	1.42	1.28	1.3	.....	1.36	1.50	1.28	1.28	1.28	1.57	1.75	1.41	1.12
Total tuyères to throat (fixed floor)	23′ 11.5″	10′ 6.75″	17′–5″	9′–6″	21′ 7″	10′–4″	1.77	18′	18′	18′	18′–3″	18′–3″	18′–3″	18′–3″	6′–6″	12′	14′	8′–2″	12′–10″	12′	7′	12′–9″	10′	12′–6″	17′ 11½″	13′–10″	13′–4″	14′ 10″	17′ 7″	11′ 8½″	18′ 11″
Total tuyères to top of crucible, inches	43½	41	2″	.....	31½″	.....	32	25.5	25.5	25.5	23.5	23.5	23.5	23.5	8.5	15	22	16	14	.....	17	24	24	30	11	10	6	11	26	30	15
Jackets, height	none	none	1′–10″	11′–8″	21′ 4″	13′–10″	18′–3″	17′–7″	17′–7″	17′–7″	17′–7½″	17′–7½″	17′–7½″	17′–7½″	9′ – 11′	6′–½	14′–6″	8′–6″	7′–6″ & 7′–10″	6′–0″/8′6″–0	9′	10′ 4″	9′ & 7′	12′	6′ 6″ & 6′ 0″	14′–10″	14′–10″	14′–10″	12′ 1″ & 12′ 6″	12′ 6″ side & 12′ 2″ end	12′ 10½″ & 11′ 1″	13′ 6″
Height, inches	39.75	21½	.....	140	48″	.....	122	80	80	80	122	122	122	122	none	6–½	54	38	32	72	24	120	72	15	46 above bed plate	80	7.5	7.5	83	130.5	136.25	94
Mount inches per foot height	.....	.....	.....	.....	4½″	.....	1.18	2.16	2.16	1.20	1.20	1.20	1.20	1.20	none	2	2.44	2.5	9½″ total	3.4	0.25	0.125	1.7	1.5	9	1.07	1.2	1.2	1.1	0.625	0.625	1.5
Earth fixed (f) or movable (m)	f	f	Int. Cru.	f	m	f	f	f	f	f	f	f	f	f	m	m	m	f	f	f	f	f	two m	f	f	f	f	f	.....	f	f
Hearth shell dimensions, feet	.....	.....	.....	12′ diam. 3′ high	4 in series, see Figs. 175 & 176	Two 16′×4′	16′ diam. 5′ high.	16′ diam. 5′ high.	16′ diam. 5′ high.	16′ diam. 5′ high.	16′ diam. 5′ high.	16′ diam. 5′ high.	16′ diam. 5′ high.	16′ diam. 5′ high.	15′×5′ & 2′ high.	6′0″×24′×36′ 48′×48′×24′	6′ 6″×5′ 0″ × 2′–5″ high.	4′×12′	7′ diam. & 5′ diam.	18′× 10′–0″	8′ diam. 3′ high	14′ diam.	12′×24′ rect. 12′×28′ oval	20′×10′	12′ diam.	16′ diam. 5′ high.	16′ diam. 5′ high.	16′ diam. 5′ high.	16 diam.	oval 20′ 6″ × 11′	12′ diam. 4′ high	16′
Tuyère number	6	6	12	24	24	34	46	26	26	26	50	25	50	25	56	20	20	14	30	72	24	30	60	20	12	26	88	150	44	46	40	90
Tuyère diameter, inches	4½	5½	2	3½	15×3½″	3½	4	4	4	4	3½	4½	3½	4½	3	5	5	5	5	4	2.5 & 3	5	4½	4	4	3	4	4	4	4	4	4
Tuyère ratio[2]	5.65	.....	1.10	2.70	16.00	4.85	6.22	5.94	5.94	4.66	3.95	4.42	3.95	4.42	3.39	10.91	2.63	7.85	7.23	7.54	2.5 & 3.3	5.95	9.68	3.43	4.87	2.63	4.65	4.65	2.9	10.09	8.21	6.82
Charge (ore and flux) weight, pounds	2,680	1,650	.....	4,000	4,185–4,680	9,000	14,000	12,000	12,000	12,000	18,000	18,000	18,000	18,000	7,400 ore ch. 7,500 matte ch.	2,650	2,000	4,000	20,00	5,000	2,500	5,000	9,000	2,500 3,000	8,000	2,150	14,000	14,000	12,000 18,000	5.5–7.0 ore 20–25 matte ch.	12,000	10,500
Charge in 24 hr., short tons	227	207	55.1	300	400 560	450	863	352	400	315	430	486	405	446	300	194	120	240–280	515	850–900	182 & 318	180	800–950	350	322	350	1,400	2,500	600–700	2.8	247	815
Charge tons per sq. ft. hearth area, 24 hr.	.....	.....	1.64	5.87	6.8 and over	7.2	9.38	5.8	7.4	4.5	4.2	5.4	4.7	4.3	2.5–2.75	5.4	3.42	7–9	6.32	7–7.5	4 & 7	6	6.7–7.9	5	5.61	5	5.88	6.17	8.10	1.97	5	8.14
Fuel, per cent. of charge	2.77	2.72	2.5	20	2.15	4	8.23	4.4	4.4	4.4	1.78	1.78	1.78	1.78	2.25–3.00 ore ch. 13–20 matte ch.	0.95	0.50–0.75	4	1.4	8.5	2 & 5	3	2.8–3.8	5.5–7.5	3.7	6.80	6.79	6.79	2.5	8.0	4.93	4.00
Fuel, pt. of charge	2.36	2.13	6.0	8.5	25–30	8.7	20.7	12.1	12.1	12.1	22.7	22.7	22.7	22.7	11–16 ore ch. 17–18 matte ch.	5–6	.....	10.3	2.7	8.5–2.5	5.7 & 18.5	23	5.6–7.6	15.20	28.8	14.7	13.80	13.80	8.97	8.20	
Fuel, burnt off	0.06–0.08	0.06–0.08	.....	18.5	95–97	80–90	85	64.4	64.4	64.4	76.6	76.6	76.6	76.6	.....	50–75	70–77	80	60–65	80	54 & 87.25	80	75	65–75	75	78.0	70.58	70.58	8.80	22.6	73.39	70.80
Fuel per cent. of charge	33	30	12.5	10	3–5	4.5–6.5	5	6.5	6.5	6.5	5.73	5.73	5.73	5.73	4½–6	18.50	14–18	14	13–13.5	12.5–13.5	5.7 & 10	7	12.5	11.75	12	9.1	10	8.70	8.70	6.6	9	10	11.9
Fuel per cent. ash	8–10	8–10	11.0	14	17	10–20	10–12	13.8	13.8	13.8	13.8	13.8	13.8	13.8	10–20	20	20	32	17.5	22–25	12 & 27	18	12–20	16	16.18	17.8	15.77	15.77	20	17.8	12	8.10
Cubic foot per minute	3.531	3.531	.....	9,000	18,000	15,000–24,000	30,000	13,500	13,500	13,500	20,250	20,250	20,250	20,250	18,000	.....	7,600	8,000	22,000 coarse	25,000	238 & 300	19,000	27,000–30,000	15,000–16,000	16,290	10,500	52,070	80,530	10,000 24,000	10,800	9,000	10,000
Pressure, ounces	4½	4½–4½	10–12½	32	64	26–32	30–40	45	45	45	45	45	45	45	15–24	24–30	14–18	25–29	26–30	24–30	10 & 20	36	30–35	32–30	24	40	40	40	28.11	17	24	15.40
Temperature, degrees Cent.	atm.	atm.	atm.	atm.	atm.	atm	atm.	atm.	atm.	atm.	atm.	atm.	atm.	atm.	atm.	atm.	atm.	atm.	atm.	atm.	305 & 333	290	atm.	atm.	atm.	38	atm.	atm.	atm.	18.4	atm.	atm.
Water for jackets, gal. per hr.	380	475	925	18,000	12,000	13,500	.....	.....	.....	.....	.....	.....	.....	.....	100,000	6,000	.....	7,500	12,500½	40,000	.....	.....	50,000	20,000–24,000	.....	41,000	41,100	68,400	60,000	2,126½	30,000	6.0
Cooling water, gallon per ton slag	not gran.	not gran.	not gran.	not gran.	22 000 & over	not gran.	.....	.....	.....	.....	.....	.....	.....	.....	2,000	not gran.	.....	3,500	1,000	not gran.	.....	1,500	not gran.	not gran.	not gran.	2,000	240	240	not gran.	not gran	not gran	not gran
Men (8-hr. shift a (regular crew) b (extra labor).	19–20	30–32	a = 3 b = 3	a = 18 b = 6	14½	a = 4½ b = 3½	a = 47 b = 40	32	With 32	six 32	furnace 32	ace run-ning 32	ning 32	32	.....	.....	a = 4 b = 3	.....	68 & 32	a = 6 b = 7	a = 18 b = 8–12	.....	.....	.....	a = 7 b = 3	.....	a = 13 b = 16 for 8 and one 6½	a = 21 two 31-ft. 8-ft. furn.	a = 11 b = 4			a = 8
Slag per cent. of charge	8.1	6.7	15	30	.....	17	18	12.9	12.9	12.9	15.7	15.7	15.7	15.7	.....	3.3	4–5	.....	4.2	2–2.5	12.5	.....	.....	20–25	28.75	11.5	11.9	11.0	2.00	2.1	10	2.8
Cu, per cent.	35–38	42–46	35	62.16	45–52	20	12.38	31.4	31.4	31.4	10	10	10	10	13–20 ore ch. 45 matte ch.	30	10–14	40.21[3]	33	40–50	over 20	30	45–50	30–50	18.22	49.37	42	62	40.50	33.7	40	40.30
Specific gravity	4.64–4.71	4.64–4.71	4.72	5.25	4.7–5.0	4.6	.....	4.8	4.8	4.8	4.6	4.6	4.6	4.6	.....	5	.....	4.386	5.12	5	.....	.....	.....	.....	4.62	5.0	5.2	5.2	4.5–5.0 4.75			4.9
Fe	40.00	48.56	23.0	34	35–38	35.9	38.2	36.2	36.2	36.2	44.5	44.5	44.5	44.5	Ore 30.31 Matte 32.47	48.5–49.0	49	36.25	45–47	40–45	33.6–39	30	36.2–40.5	36.7[3]	42.2	37.7	39.3	39.5	40.6	44.1	37.5	42	41.5
CaO (MnO)	5.58 (0.37)	8.46 (0.33)	29–31.5	46	48–50	43.1	38.5	45.0	45.0	45.0	30.7	30.7	30.7	30.7	38.74	35.83	16.0	16	19.95	16–18	20–24	19.9–23.1	27	28.8–35.5	40.9[3]	30.4	26.2	24.8	24.8	22.6	11.7	22	26.1
MgO	15.23 (0.61)	21.81 (3.00)	8.5	11	3–35	7.6	18.5	10.8	10.8	10.8	9.9	9.9	9.9	9.9	12.88	8.37	.....	29–30	BaO 23–7.3 47	22–26	23–26	15.4	12	19.2–24.9	5.09[3]	7.0	24.4	25.2	25.2	22.6	13.7	26	23.5
CaO	16.02	17.00	5.6	5	0.5–8.2	4.6	6.0	4.3	4.3	4.3	6.2	6.2	6.2	6.2	9.43	1.07	(18 CaO) 30	3–5	10.03	7–9	6–8	8.2–7.2	11	7.1–9.3	12.36[3]	4.0	8.0	6.2	6.2	1.1	9.1	3.5	4.6
[illegible]	.....	K₂O 4.5	23.0	.....	1.2–1.5	.....	.....	1.5	1.5	1.5	1.5	1.5	1.5	1.5	2.07	1.87	3.2–4.5	.....	7.41	.....	.....	1.21[3]	.....	.....	.....	.....	.....	.....	.....	.....	.....	.....	.....
[illegible]	.....	.....	BaO 8.0	.....	BaO 2.0–3.0	5.4	.....	1.1	1.1	1.1	1.2	1.2	1.2	1.2	1.34	1.53	.....	.....	.....	.....	.....	.....	.....	.....	.....	.....	.....	.....	.....	.....	.....	.....	.....
[illegible]	0.19	0.19	1.10	0.69	0.4–0.3	0.31	0.15	0.35	0.35	0.35	0.21	0.21	0.21	0.21	0.35	0.77	0.14	0.15–0.20	0.36	0.24	0.2–0.3	0.2	0.3	0.52–0.58	0.3–0.5[3]	0.20	0.27	0.2	0.3	0.40	0.36	0.21	0.40
Specific gravity	2.81–2.84	2.81–2.84	4.0	3.60	3.0–3.75	3.55	.....	3.5	3.5	3.5	3.34	3.34	3.34	3.34	.....	.....	<3	.....	3.06	2.9–3.4	3.2	BaO 9.1	.....	.....	.....	3.54	3.2	3.2	3.3	1.50	.....	.....	3.4

[1] By per cent. of Zn in charge volatilized.

[2] Sq. in. tuyère area / Sq. ft. hearth area.

[3] Top of jackets.

[4] Included S in slag.

[5] Average for 10 months.

[6] CuS 30.37 per cent., PbS 29.12 per cent., BaS 3.56 per cent., ZnS 16.1 per cent.

[7] 0.1 per cent. Cu content of matte.

[8] 6½ in. brick between upper and lower jackets.

(Facing p. 126)

The furnaces in the United States and Canada are oblong and of large capacity. The width at the tuyéres ranges from 44 to 56 in., and the length from 266 to 1,044 in. The working height, distance from tuyères to throat, is given as ranging from 10 to 17 ft. This large diversity is only apparent, as in some cases the figures represent only the height of charge, and this usually is 10 or 12 ft., depending upon the coarseness of ore and flux; the finer the particles, the smaller the working height in order to obtain an open charge. The ratio of

---

Bogoslowsk Smeltery: DAVEY, *Trans. Inst. Min. Met.*, 1913, XXII, 591; *Eng. Mining J.*, 1913, XCV, 605; *Mining Eng. World*, 1913, XXVIII, 711.

Boston and Montana Consolidated Copper Mining Co.: HOFMAN, *Trans. A. I. M. E.*, 1904, XXXIV, 284; HIGGINS, *Eng. Mining J.*, 1909, LXXXVII, 156.

Britannia S. Co.: *Mineral Ind.*, 1906, XV, 261.

Bully Hill Smelter: MARTIN, *Mining Sci.*, 1908, LVIII, 345.

Butte Red-works: WETHEY, *Eng. Mining J.*, 1908, LXXXVIII, 1153.

Canadian Copper Co.: BROWNE, *Can. Mining J.*, 1907, I, 305; *Eng. Mining J.*, 1908, LXXXV, 557; TURNBULL, *Mines Minerals*, 1910, XXXI, 121.

Cananea Consolidated Copper Co.: "Ore Bedding," WOODBRIDGE, *Eng. Mining J.*, 1906, CXXXII, 624; MESSITER, *Mining Sci. Press*, 1907, XCIV, 539, XCV, 528; ELSING, *Mining Sci. Press*, 1912, CIV, 619; SHELBY, "Blast Furnace," *Eng. Mining J.*, 1908, LXXXV, 841, 867; SHELBY, "Dust," *Eng. Mining J.*, 1908, LXXXV, 204; FINDLAY, "Plant," *Mining Sci. Press*, 1905, XCI, 360; BRINSMADE, *Mines Minerals*, 1907, XXVII, 264, 465; HERRICK, *op. cit.*, 1909, XXX, 65; REEDER, *op. cit.*, 1911, XXXII, 55.

Cerro de Pasco: STRAUSS, *Mining Sci. Press*, 1908, XCVII, 637; *Mining World*, 1910, XXXII, 709; LLOYD, *Trans. Inst. Min. Met.*, 1909–10, I, 11.

Copper Queen Consolidated Mining Co.: Editor, *Eng. Mining J.*, 1905, LXXX, 197; WOODBRIDGE, *op. cit.*, 1906, LXXXII, 242, 298 (blast furnace, ore bedding); BRINSMADE, *Mines Minerals*, 1907, XXVII, 273; MILTON, *op. cit.*, 1909, XXX, 148; LEE, *Eng. Mining J.*, 1910, XC, 504 (Dust); ROSE, *Glückauf*, 1911, XLVII, 107.

Douglas Smeltery: BARBOUR, *Eng. Mining J.*, 1908, LXXXV, 303; TUCKER, *op. cit.*, LXXXVI, 413.

Ducktown Sulphur, Copper & Iron Co.: ALABASTER and WINTLE, *Trans. Inst. Min. Met.*, 1905–06, XV, 274; FREELAND, *Eng. Mining J.*, 1903, LXXV, 664.

Garfield Smeltery: BEASON, *Eng. Mining J.*, 1906, LXXXI, 509; INGALLS, *op. cit.*, 1907, LXXXIV, 576; BRINSMADE, *Mines Minerals*, 1908, XXVIII, 305; KROUPA, *Oesterr. Jahrb.*, 1908, LVI, 213.

Granby Consolidated Min., Sm. & Power Co.: HODGES, *J. Can. Mining Inst.*, 1908, XI, 408; SACKETT, *Mines Minerals*, 1910, XXX, 524; LATHE, *J. Can. Mining Inst.*, 1910, XIII, 275; JACOBS, *Met. Chem. Eng.*, 1911, IX, 406; 1912, X, 113; AVERY, *Eng. Mining J.*, 1912, XCIII, 935; LEE, *Met. Chem. Eng.*, 1912, X, 147.

Great Cobar Smelting Works: Correspondent, *Eng. Mining J.*, 1908, LXXXV, 950; AUSTIN, *Mineral Ind.*, 1911, XX, 225.

Greenwood Copper Smelting Works: MCALLISTER, *Eng. Mining J.*, 1911, XCI, 1011; BELL, *Trans. Can. Mining Inst.*, 1913, XVI, 152.

General: CHRISTENSEN, *Eng. Mining J.*, 1908, LXXXVI, 847; *Mining World*, 1909, XXX, 381; 1910, XXXIII, 489.

Horseshoe Mfg. Co.: FULTON and KNUTZEN, *Trans. A. I. M. E.*, 1905, XXXV, 326.

International S. & R. Co.: PALMER, *Mining World*, 1910, XXXII, 419; *Mines Minerals*, 1911, XXXI, 321; *Mines Methods*, 1909–10, I, 149; REPATH and MCGREGOR, *Met. Chem. Eng.*, 1911, IX, 15; THOMSON and SICKA, *Trans. A. I. M. E.*, 1913, XLVI.

Kyshtim Smelter: CARLYLE, *Eng. Mining J.*, 1912, XCIII, 1231; LANGE, *Metall u. Erz*, 1913, X, 108.

TABLE XXXI.—GENERAL DATA ON BLAST-FURNACE SMELTING

	Granby Smelter, Anyox, B. C.	Tennessee Copper Co., Copper Hill, Tenn.	International Nickel Co., Sudbury, Ont.	Braden Copper Co., Caletones, Chile	Calumet and Arizona, Douglas, Ariz.	Mt. Lyell Mining and Rwy. Co., Queenstown, Tasmania
Horizontal section at throat, inches	72 × 360	72 × 385.5	70 × 204 70 × 306	74 × 600	two 63 × 480	51 × 144
Area at throat, square feet	180	192.75	99.1 and 148.7	308	210	51
Horizontal section at tuyères, inches	54 × 360	56 × 385.5	50 × 204 and 50 × 306	48 × 600	48 × 480	42 × 126
Area at tuyères, square feet	135	150	70⅚ and 166¼	200	160	36.75
Ratio throat to hearth area	1.33	1.28	1 to 1.628	1.54	1 31	1 39
Height, tuyères to feed floor	16 ft. in 3 furnaces 23 ft. in 1 furnace	18 ft. 3 in.	18 ft. 9 in.	11 ft.	16 ft. 4 in.	13 ft. 10 in.
Height, tuyères to bottom of crucible, inches	32	31.5	19½	29	.....	31½
Water jackets, height	Top 6 ft. 8 in. and 5 ft. 2 in. Intermediate 6 ft. 8 in. Bottom 10 ft. 6 in. 10 ft. 6 in.	17 ft. 7½ in.	18 ft. 5 in.	15 ft. 2½ in.	16½ ft.	14 ft. 10 in.
Bosh height, inches	110	122	75	174	.....	48
Bosh, inches per foot height	2 77	1 20	2 3/16	1⅛	0.6	2¼
Forehearth, fixed or movable	Fixed	Fixed	Fixed	Fixed	Fixed	Fixed
Forehearth shell, dimensions	16 ft. diameter	12 × 24 × 4½ ft.	23 × 24 × 5½ ft.	oval 15 × 31½ ft.	oval 9 ft. 7 in. × 22 ft. 9 in.	19 ft. 8 in. × 7 ft. 7 in.
Tuyères, number	63	74	17 and 48	90	64	16
Tuyères, diameter, inches	4¼	4	6	5	4½	15 × 3½
Tuyère ratio	6.62	6.2	11.27	.....	.....	22.6
Charge (ore and flux) weight, pounds	8,000 ore, 1,000 flux	5,000	Approx. 16,000	4,000	(a)	3,900
Charge in 24 hr., short tons	920	1,000	350 and 550	900	925	290

Charge, tons per square foot hearth area in 24 hr	6.81	6.68	4.8	4.5	5.78	7.9[b]
Cu, per cent of charge	4.16	1.58	5.9 Cu + Ni	21.1	5.41	10 to 11
S, per cent of charge	25.58	20 0	15.0	14.6	12.6	15.0
S, per cent burned off	80 (on ore furnaces)	80.9	37.6	30.0	60.0	65.0
Coke, per cent of charge	4.83	3.8	10.5	13.5	12.7	12.8
Coke, per cent ash	25.0	13.0	13.6	16	16.3	17.0
Blast, cubic feet per minute	28,000 to 30,000	36,000	1,300 per lin. ft. of furnace	48,000 (5,000 ft. elev.)	43,743	
Blast pressure, ounces	42	45 to 50	28	24	26.8	16 to 25
Blast temperature, ° C	Atm.	.....	.....	55	Atm.	Atm.
Cooling water for jackets, gallons per hour	50,000	144,000	66,000 and 100,000	.....	.....	13,000
Granulating water, gallons per ton slag.	2,000 in granulating; 2,000 flush water from jackets	430	Not granulated			
Men in 8-hr. shift	Regular crew 4 Accessory labor 3	6	33	17 regular 6 accessory	15 regular 5 accessory	7
Matte produced, per cent of charge	15.6	.....	23.0	45	15.25	18
Matte produced, per cent Cu	15.0	12.0	22.5 Cu + Ni	43.7	30.9	37 to 40
Slag analysis:						
SiO_2	37.7	34.2	30 to 31	36.3	34.6	33.0
FeO	42.9	40.0	44.5	41.5	38.7	46.5
CaO	7.4	6.9	6.5	1.7	9.3	6.75
Al_2O_3	7.2	4.0	6.0	14.6	8.9	8.10
MgO	2.5					
S	1 7	2.00	2.15	0.7	1.3	0.45
Cu	0.24	0 31	0.5 Cu + Ni	0.51	0.44	0.35
Slag, specific gravity	3.25	3 34	3.75	3 23	.....	3.6 to 3.70
Matte, specific gravity	3.9 to 4 0	4 53	4.84	5.18	.....	4.7 to 5

[a] 87 per cent ore; 9.5 per cent by-products; 3.5 per cent flux.

[b] Latest work 10 tons.

throat to hearth area is about as 1.3:1, showing that with a working height of about 12 ft. the sides are very steep, or that most furnaces aim to have very little reducing action in the shaft. This is shown similarly by the very small amount of bosh of the jackets. The water jackets in nearly all cases extend

---

Mammoth Copper Min. Co.: CAMPBELL, *Mining Sci. Press*, 1908, XCVI, 30; MARTIN, *op. cit.*, 1908, XXIX, 309; 1909, XXXI, 311; *Mining World*, 1908, XXIX, 310; HASKELL, *Mines Methods*, 1908, XXXVIII, 392; RICE, *Eng. Mining J.*, 1911, XCI, 614; TUPPER, *Mining Eng. World*, 1912, XXXVI, 337.

Mason Valley Smelter: READ, *Mining Sci. Press*, 1912, CV, 267.

Mount Lyell Min. and Ry. Co.: STICHT, *Mineral Ind.*, 1907, XVI, 428; *Metallurgie*, 1906, III, 563, 591, 638, 664, 686, 709, 760, 788; Drawing of blast furnace: *Mineral Ind.*, 1907, XVI, 350.

RIO TINTO, BARON, *Mining World*, 1909, XXXI, 681.

Shannon Copper Co.: Correspondent, *Mining Sci. Press*, 1902, LXXXIV, 101.

Tennessee Copper Co.: HEYWOOD, *Eng. Mining J.*, 1904, LXXVII, 231; ALABASTER and WINTLE, *Trans. Inst. Min. Met.*, 1905–06, XV, 269; CHANNING, *Eng. Mining J.*, 1905, LXXIX, 1195; LXXX, 6; *Mining Sci. Press*, 1908, XCVI, 97; FREELAND and RENWICK, *Eng. Mining J.*, 1910, LXXXIX, 116; GUESS, *op. cit.*, 1910, XC, 866; MORGAN, *Mining Sci. Press*, 1910, CI, 677; FALDING and CHANNING, *Eng. Mining J.*, 1910, XC, 555; EMMONS, *op. cit.*, 1911, XCI, 15; *Trans. A. I. M. E.*, 1910, XLI, 723; NELSON, *Mines Methods*, 1912, III, 407; *Mining Sci.*, 1912, LXV, 149; OFFERHAUS, *Metall u. Erz*, 1913, X, 863.

Teziutlan Smeltery: Correspondent, *Eng. Mining J.*, 1909, LXXXVIII, 655; 1910, XC, 169.

Trail Smeltery: TURNBULL, *Mines Minerals*, 1910, XXXI, 121; BUCHANAN, *Trans. Can. Mining Inst.*, 1913, XVI, 156.

Tyee Copper Co.: MAYNARD, *Eng. Mining J.*, 1909, LXXXVIII, 905; JACOBS, *op. cit.*, 1072; PHELPS, *Mining Sci. Press*, 1907, XCV, 782; "B. C. Report Minister of Mines," 1902, 243.

United States Metals Refining Co.: VAIL, *Eng. Mining J.*, 1913, XCV, 1031; XCVI, 553.

United Verde Copper Co.: VAIL, *Eng. Mining J.*, 1913, XCVI, 287, 341.

Wallaroo Smelter: CLOUD, *Trans. Inst. Min. Met.*, 1906, XVI, 55, 100.

Washoe Plant: HOFMAN, *Trans. A. I. M. E.*, 1904, XXXIV, 258; AUSTIN, *op. cit.*, 1906, XXXVII, 431: Correspondent, *Mines Minerals*, 1907, XXVIII, 131, 248; OFFERHAUS, *Eng. Mining J.*, 1908, LXXXV, 1189, 1234; LXXXVI, 747; 1909, LXXXVIII, 243.

Yampa Smeltery: PALMER, *Mining Sci. Press*, 1909, XCIX, 225; CHRISTENSEN, *Mining World*, 1909, XXX, 621.

References to Blast-furnace Plants Since 1913

Arizona Smelting Plants: MCGREGOR, *Trans. A. I. M. E.*, 1916, LV, 781.

Blast-furnace Design: *Eng. Mining J.*, 1916, CII, 658.

Braden: DOUGLASS and COLLEY, *Eng. Mining J.*, 1916, CI, 315.

Calumet and Arizona: VAIL, *Eng. Mining J.*, 1914, XCVIII, 102; DE KALB, *Mining Sci. Press*, 1918, CXVII, 181.

Copper Queen Smelting Works: VAIL, *Eng. Mining J.*, 1915, XCIX, 1.

Ducktown Sulphur, Copper & Iron Co.: MATHEWSON, *Eng. Mining J.*, 1918, CVI, 138.

El Paso Smelter: VAIL, *Eng. Mining J.*, 1914, XCVIII, 465, 515.

Garfield Smelter: RICKARD, *Mining Sci. Press*, 1918, CXVII, 853.

Granby Smelting Works: WILLIAMS, *Eng. Mining J.*, 1917, CIV, 707.

Mt. Lyell Mining and Railway Co.: *Mining Sci. Press*, 1918, CXVII, 878.

Tennessee Copper Co.: MATHEWSON, *Eng. Mining J.*, 1918, CVI, 138.

United Verde Extension: NICHOLS, F. E., *Eng. Mining J.*, 1918, CVI, 689.

United Verde Smelter: PARSONS, *Mining Sci. Press*, 1920, CXXI, 547.

Washoe Reduction Works: AUSTIN, *Mining Sci. Press*, 1916, CXII, 195, 304, 547.

down to the bottom of the crucible. Most of the tuyères are 4 and 5 in. in diameter; the tuyère ratio shows a considerable variety, which seems to prove that there exists still a diversity of opinion upon this point; its explanation lies in part in the character of the ore treated.

(a) Reducing Smelting

78. Reducing Smelting in the Blast Furnace of Roasted (Raw) Sulphide Ore for Matte.—A reducing fusion in the blast furnace is a process in which enough carbonized fuel is added to the ore charge to furnish the reduction and the heat necessary for the operation. It is intended that the blast shall oxidize only the C and no S. Any elimination of S as SO_2 taking place during the descent of the charge in the furnace may be due to oxidation by the ascending gas current, but is probably caused by the action in the charge of oxide upon sulphide.

Roasted sulphide copper ore contains oxides, sulphates, and undecomposed sulphides of Cu and Fe, subordinately also of Zn, Pb, Mn, perhaps some As and Sb compounds, and the gangue. In the reducing fusion, Cu, Fe, and S form a matte which takes up the precious metals and part of the Zn, Pb, As, and Sb; the gangue with the necessary fluxes form the slag, consisting of SiO_2, FeO and CaO, some Al_2O_3[1] and other bases. The formation temperatures with the effects of different bases have been discussed elsewhere.[2] As it usually takes many tons of ore, or slag, to make 1 ton of matte, the ratio of concentration being $\pm$ 10:1, the composition and character of the slag to be formed is one of the first considerations in making up the charge.

79. Blast-furnace Slag in Reducing Smelting.—The slags formed in the reducing smelting of roasted sulphide copper ore show a great variety in silicate degree and composition. The former ranges from sub to bisilicate, but usually is near a singulo- and sequisilicate. With ores rich in Fe, the percentage of SiO_2 covering a range of from 28 to 40 per cent, FeO is generally high (50 per cent) and CaO low (10 per cent); the reverse is the case with ores containing little Fe; Al_2O_3 is rarely high (15 per cent), more frequently low (4 per cent) than medium (8 per cent). The main requirements that the slag has to fulfil[3] are that it shall form at a low temperature, require little superheating to be fluid, have a specific gravity not too high to allow a satisfactory settling and separation of matte, and be cheap, *i.e.*, not require much flux. There is little danger of Cu being scorified as long as there is enough FeS present to sulphurize any metallic or silicate of copper that may have entered the furnace or have been formed in the downward passage of the charge.

Wanjukow[4] has investigated in the laboratory the solubility of Cu_2S of a 30 per cent matte in ferrocalcic silicates. He finds that the solubility falls with the degree of silication as shown in Fig. 94; and that it decreases with the

[1] BELLINGER, *Eng. Mining J.*, 1912, XCIV, 321; *Mining Sci. Press*, 1912, CV, 114; *Met. Chem. Eng.*, 1912, X, 693.

[2] HOFMAN, "General Metallurgy," 1913, p. 454–463.

[3] MOSTOWITSCH, *Metallurgie*, 1912, IX, 559.

[4] *Op. cit.*, 1912, IX, I, 48.

replacement of FeO by CaO (Fig. 95). The results of the effects of replacement of the constituents FeO and CaO by the bases Al_2O_3, MgO, and ZnO in two sesquisilicate slags are assembled in Fig. 96. Here curves *a*, *b*, and *c* represent the solubility of Cu_2S (30 per cent matte) in the sesquisilicate SiO_2 42.42, FeO 21.58, CaO 36.00; and curve *d*, that in the sesquisilicate SiO_2 39.78, FeO, 48.22, CaO 12.00.

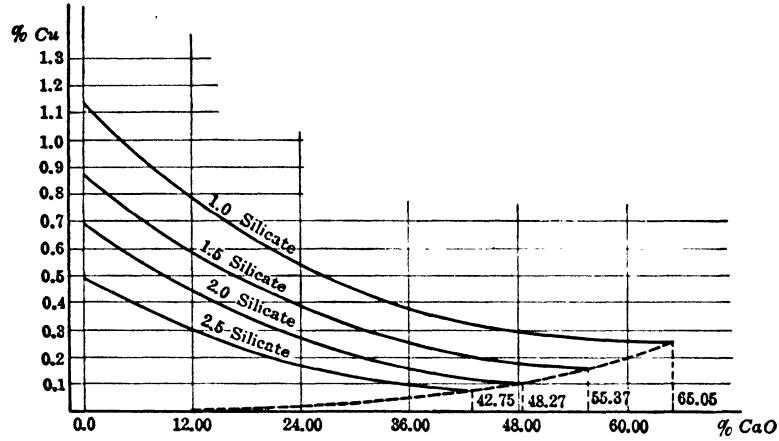

FIG. 94.—Solubility of Cu_2S (30-per cent matte) in ferro-calcic silicates with increasing percentages of CaO.

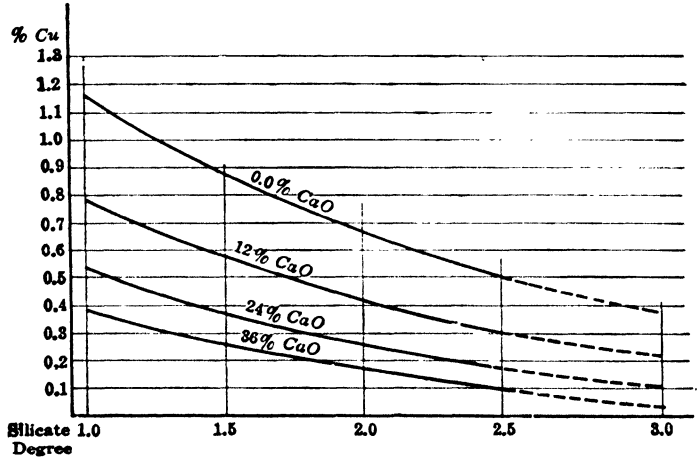

FIG. 95.—Solubility of Cu_2S (30-per cent matte) in ferro-calcic silicates of different degrees of silication.

In general, slags which contain a metal having much affinity for S will carry more Cu than those which have little. In the following list by Wanjukow, Cu stands at the head, Al at the bottom: Cu, Ni, Co, Fe, Mn, Zn, Ca, Mg, Al.

The effects of varying percentages of Cu in matte upon the Cu content of slags is taken up in §100.

The compositions of slags formed in a reducing smelting may be the same as those made in pyritic smelting (§85) or in partial pyritic smelting (§90, 91), as the latter must fulfil requirements similar to the former as far as specific gravity and fluidity are concerned. On account of the great latitude in composition, and of the fact that smelters usually treat ores from a single district, typical slags, such as have been developed in lead smelting, have not been devised, although these will work in the reducing fusion of a copper blast furnace as they do in that of the lead blast furnace.

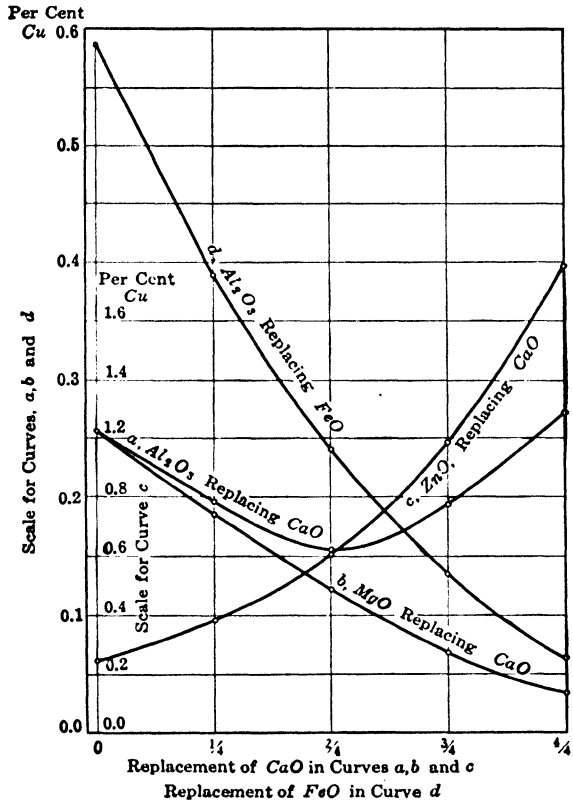

FIG. 96.—Effect of replacement of FeO and CaO by Al_2O_3, MgO and ZnO in a sesqui-ferro-calcic silicate upon the solubility of Cu_2S (30-per cent matte).

When the leading ore was a cupriferous pyrite or pyrrhotite with little gangue, the slags made consisted mainly of SiO_2 and FeO, totaling over 90 per cent the remainder being small amounts of Al_2O_3 and earthy bases. The investigations of Hofman[1] have shown that with pure ferrous silicates the formation temperatures decrease as the silicate degree rises, but experience has proved that the reverse is the case with fluidity; the singulosilicate forms at a higher temperature and is more fluid than the bisilicate, and the 3:4 or the 2:3

[1] "General Metallurgy," 1913, p. 455; *Trans. A. I. M. E.*, 1899, XXI, 682.

silicates lie between the two. The curves of Hofman also show that the replacements of FeO by CaO lower the formation temperatures to a certain point, beyond which they rise again; also that low-SiO_2 ferrous slags can endure more CaO before they reach the minimum than high-SiO_2 slags. Experience has shown that additions of CaO up to certain amounts increase the fluidity. These statements give the reasons for the preference of the 1:1 and 2:3 ferrous silicates over those that are either more basic or more acid. With slags more basic there is danger of hearth accretions, with slags more acid, there is either a small tonnage or a high coke consumption to give the slags the required fluidity. Thus $2FeO \cdot SiO_2$, with SiO_2 29.20 and FeO 70.80 per cent, reduced to a total of 95, gives SiO_2 27.74 and FeO 67.26, leaving 5 per cent for other oxides; in the same manner, $3FeO \cdot 2SiO_2$, with SiO_2 35.70 and FeO 64.30 per cent, gives SiO_2 33.915, FeO 61.085, RO 5.00 per cent; and the $4RO \cdot 3SiO_2$, with SiO_2 38.46 and FeO 61.54 per cent, gives SiO_2 36.537, FeO 58.463, RO 5.00 per cent. With these ferrous slags, 28 per cent SiO_2 is about as low as one dares to go, 33 per cent SiO_2 is a better figure; 38 and 39 per cent SiO_2 is rather high. There is an old rule which it is safe to follow in starting: to make SiO_2 about 33 per cent, to figure the iron as Fe = SiO_2, and to have about 10 per cent CaO. This will give a total of 85.5 per cent and allow 14.6 per cent for other oxides.

Slags made in some of the few remaining copper-blast furnaces in which a strictly reducing fusion is carried on are given in Table XXX.

80. Fuel and Blast.—The fuel ordinarily used is coke; a common ratio is 6 charge : 1 coke, which is equal to 16.6 per cent coke; this figure sometimes falls to 13 and again rises to 17 per cent. An overheating of a ferruginous slag by an excessive amount of coke is likely to cause reduction of iron to the metallic state. The furnace runs best if it has just the right amount of fuel; any lack will cause the forming of long noses at the tuyères and a corresponding reduction of tonnage.

Charcoal, which used to be the universal blast-furnace fuel, has been given up in practically all non-ferrous blast furnaces.[1] Where one is forced to use it, the amount required may be one-third larger than the necessary coke.

In a few instances green wood[2] sawed into 2-ft. lengths has been successfully used to replace as much as one-half of the coke, 1 lb. coke being equal to from 2.6 to 3.0 lb. of wood.

Experiments with oil as blast-furnace fuel have been carried on by Hamilton,[3] Kiddie,[4] Waters,[5] and Lang.[6]

[1] Modern exception: C. S., *Eng. Mining J.*, 1911, XCI, 110.

[2] *Trans. A. I. M. E.*, 1891, XX, 545 (LANG); *Eng. Mining J.*, 1902, LXXIV, 646 (COLLINS); 1906, LXXXII, 700 (MITCHELL); 837 (BROMLY); 1013 (BRETHERTON); 1910, LXXXIX, 774 (BRETHERTON).

[3] *Eng. Mining J.*, 1911, XCI, 224.

[4] *Op. cit.*, 1911, XCII, 434 (JACOBS).

[5] *Op. cit.*, 1912, XCIII, 877.

[6] *Mining Sci. Press*, 1913, CVI, 248.

The blast in a reducing fusion is hardly ever preheated; in some instances,[1] as with the Giroux hot blast (Figs. 85 to 86),[2] part of the heat of the tunnel-head gases is utilized for this purpose or the Kiddie hot-blast system.[3]

The blast pressure will vary greatly with the width of the furnace, the diameter and number of tuyères, the amount of fines in the charge, and the percentage of iron. Formerly a pressure of 12 oz. per square inch was common; with the increase of distance between tuyères this figure has grown materially (see Table XXX).

Lloyd[4] gives as his experience of smelting at Cerro de Pasco, Peru, altitude 14,000, that a blast furnace behaves about the same way as at sea level, except that its smelting power is smaller; that with slag composition the same holds good; that any pyritic effect (§85) is lower; that, on account of the diminished smelting power, radiation losses are to be avoided (no jacketing of crucible walls), the tuyères should be of larger diameter and the distance (or width of furnace) smaller, and the coke of good quality.

Sacio[5] concludes from his study of smelting at high altitudes that the capacity of blowers, air conduits, and tuyères has to be increased; that effort has to be made to diminish the loss by radiation; and that the use of hot blast is desirable.

81. Chemistry of Reducing Smelting.—The details of the chemistry of the reducing fusion of roasted sulphide copper ore have been studied little. In general, the processes to be considered are reduction, sulphurization, decomposition, and slagging; oxidation is confined practically to the burning of the fuel, although some sulphide may be attacked by free O. The principal reducing agents are C and CO.

1. Reduction may be expressed by $2CuO + C = 2Cu + CO_2$, $CuO + CO = Cu + CO_2$, $2CuSO_4 + 3C = Cu_2S + SO_2 + 3CO_2$; $Fe_xO_y + yC = Fe_x + yCO$ beginning at 400° C. and $Fe_xO_{x+y} + yCO = xFeO + yCO_2$ beginning at 200° C.; $CaSO_4 + 4$ (or 2) $C = CaS + 4CO$ (or $2CO_2$) and $CaSO_4 + 4CO = CaS + 4CO_2$ beginning at 700° C.; similarly, BaS from $BaSO_4$ by C beginning at 600° C., and by CO at 650° C.

2. Sulphurization by $2Cu + FeS \rightleftarrows Cu_2S + Fe$, $Cu_2O + FeS = Cu_2S + FeO$, $Cu_4SiO_4 + 2FeS = 2Cu_2S + Fe_2SiO_4$, $Cu_2O + Ca(Ba)S = Cu_2S + Ca(Ba)O$.

3. Decomposition of MSO_4 by $MSO_4 + \text{heat} = MO + SO_3(SO_2 + O)$; of (Alk. earth)$SO_4$ by $Ca(Ba)SO_4 + SiO_2 = Ca(Ba)SiO_3 + SO_2 + O$ beginning at about 1,000° C.

[1] BRETHERTON, *Eng. Mining J.*, 1899, LXVIII, 604, 698; 1900, LXIX, 614; LXX, 760; *Mining Sci. Press*, 1900, LXXXI, 572; 1912, CIV, 243.

[2] Traylor Engineering Co.: *Eng. Mining J.*, 1906, LXXXII, 698; *Mining Sci. Press*, 1906, XCIII, 792; VAIL, *Eng. Mining J.*, 1913, XCVI, 341 (United Verde Copper Co.).

[3] JACOBS, *Eng. Mining J.*, 1906, LXXXII, 598.

[4] *Trans. Met. Inst. Min. Met.*, 1909–10, I, 11.

[5] *School Mines Quart.*, 1913, XXIV, 344; *Met. Chem. Eng.*, 1913, XI, 499.

4. Slagging has been referred to on page 132.

5. Matting and slagging by $4CuO + 3FeS + SiO_2 + 2C = 2Cu_2S, FeS + Fe_2SiO_4 + 2CO$.

Before considering the changes in the ascending gas current, it is necessary to picture the conditions of the charge extending from tuyère to throat. In the smelting zone coke will prevail over melting refractory parts of the charge requiring the high temperature of this region to become liquefied; matte and eutectiferous constituents of the reduced original charge have been melted above and have run down below the tuyère level. Higher up, the relative amounts of fuel and charge will be approximately the same as when fed at the throat. The temperature at the tuyère of about 1,200° C. will decrease toward the top of the charge from which the gases leave at a temperature of 250° C. or higher.

The blast entering through the tuyères strikes coke at a temperature of 1,200° C. According to Ernst,[1] the C burns to CO, but the large volume of air entering oxidizes the CO in part to CO_2, so that at the tuyère level the gases are a mixture of N, CO_2 and CO. As they ascend in the furnace they arrive quickly at the region of lower temperature; the reducing power of C, burning now to CO_2, and that of CO, also burning to CO_2, increases as long as this power is not weakened by the increasing presence of CO_2. On the whole, the percentage of CO_2 in the gas mixture becomes larger as this rises in the furnace, and will strongly prevail over CO when it leaves the top of the charge. The older gas analyses of Bunsen,[2] Kersten,[3] Schubin,[4] and Heine[5] appear to substantiate this; modern analyses are wanting. The gases from the blast furnaces at Mansfeld, Germany (Table XXXII), form an exception, as the furnaces are run more in the manner of producing pig iron than of matte; in fact, part of the gases is used to preheat the blast, the rest in gas engines.

TABLE XXXII.—TUNNEL-HEAD GASES FROM MANSFELD[a]

Name of smelter	Krug	Koch	Eckhardt	Kupfer-hammer
CO_2	9.3	11.1	13.6	15.6
CO	18.8	20.6	15.2	12.8
N (diff.)	71.9	68.3	71.2	71.7

[a] "Der Kupferschieferbergbau und der Hüttenbetrieb," Mansfeld'sche Kupferschieferbauende Gewerkschaft, Eisleben, 1889, p. 81.

Considering the changes in the descending ore charge, at first any H_2O present will be expelled, then CuO will be reduced and sulphurized, $CuSO_4$ decomposed or reduced, $CuSiO_4$ converted into Cu_2O and Cu_2S lower down in the furnace; incidentally reverberatory furnace reactions $Cu_2S + Cu_2O = 4Cu + SO_2$ may occur and leave Cu to be sulphurized. In the upper part of the furnace

[1] HOFMAN, "General Metallurgy," 1913, p. 294.

[2] *Poggend. Ann.*, 1840, L, 81, 637.

[3] *Berg. Hüttenm. Z.*, 1844, III, 137.

[4] *Op. cit.*, 1846, V, 569.

[5] *Bergwerksfreund*, 1843, V, 208, VI, 513; 1844, VII, 547; cited by RAMMELSBERG, C. F. in his "Lehrbuch der Chemischen Metallurgie," Lüderitz, Berlin, 1865, p. 308.

porous Fe_2O_3 will be reduced both by C and CO to FeO, and this lower down will either combine with SiO_2 or be reduced by C to Fe and then sulphurized; $FeSO_4$ will be decomposed near the throat without being reduced. Reduction and sulphurization progress as the charge sinks in the furnace. Slag formation begins only a short distance above the tuyère level. The Cu_2S-FeS mixture of lowest melting point fuses between 850 and 900° C. and runs downward, is to a small extent oxidized by the O of the blast, gives up some of its Fe to form slag, and collects below the tuyère level; the rest of the sulphide melts at a slightly higher temperature and follows the first. The melting of the last sulphide is coincident with the lowest slag formation. In this the eutectic mixture will form, soften, and fuse first; flow downward; and gradually dissolve the less fusible parts. Every charge component passing through the hot tuyère region filled to a great extent with incandescent coke is melted; below it, take place the separation of matte and slag particles, the adjustments of matte components to form the desired matte, and of slag components to form the desired slag. Matte trickling through fused slag sulphurizes slagged copper and carries down with it the Cu_2S formed, thus cleaning the slag. Any Zn in the charge is either volatilized, or enters the slag both as ZnO and ZnS, or the matte, and causes imperfect separation of matte and slag. Precious metals go with the matte, as does most of the Pb; As and Sb are volatilized and enter the matte if present in small quantities; with considerable amounts a speise may be formed.[1]

82. Charge Calculations, General.—In starting a blast furnace it is essential to be sure that a slag will be produced which will run well. This requires a preliminary calculation based on a knowledge of slags and the analyses of the ores and fluxes available.

Several methods are used for slag calculations, a choice of which will depend either on personal preference or special limitations in a choice of materials for the charge. The final result is the same in all cases.

A charge calculation always requires several preliminary assumptions, principal of which is the amount of sulphur which will be volatilized. This affects the grade of matte and the amount of iron which will be oxidized and slagged. A correct estimate can be arrived at only by experience and will depend on oxidizing conditions, which, in turn, are a function of the furnace construction, amount of blast, character and size of ore.

Operators of pyritic and semi-pyritic furnaces have observed the tendency, especially with charges low in coke, for the furnace to choose its own slag. Sometimes, without a change in the charge the furnace will begin to produce a lower grade of matte. This leaves less iron available for the slag, but, instead of producing a more highly siliceous slag, the composition may remain the same and silica build up in the furnace. This condition must be remedied by increasing the coke or charging some matte.

In general, it is the practice when a furnace is running unsatisfactorily to increase or decrease certain constituents of the charge or add other fluxes in

[1] McMurtry, G. C., "Smelting Antimonial Concentrates," *Trans. Inst. Min. Met.*, 1913, XXII, 50; *Mining Eng. World*, 1913, XXXVIII, 9.

order to bring about normal conditions. This is usually done by estimation based on experience rather than by formal calculation.

83. Calculation of Charge.[1]—Of the different methods of calculating charges, the one based upon the production of a slag of a given silicate degree is chosen here, as it serves for the large range of composition of the slags that are made in a reducing as well as a pyritic fusion. Another method based upon a slag of definite percentage composition is given in §95.

The slag is to be a singulosilicate; the factors necessary for the computation of bases and SiO_2 to form silicates are given in Table XXXIII.[2]

TABLE XXXIII.—COMPUTATION OF BASES AND SILICA REQUIRED TO FORM SILICATES

1 lb. base requires pounds SiO_2 to form a			Name of base	1 lb. SiO_2 requires pounds base to form a		
Singulosilicate	Sesquisilicate	Bisilicate		Singulosilicate	Sesquisilicate	Bisilicate
0.535	0.803	1.070	CaO	1.86	1.24	0.93
0.196	0.294	0.392	BaO	5.10	3.40	2.55
0.750	1.125	1.500	MgO	1.33	0.88	0.66
0.873	1.310	1.747	Al_2O_3	1.14	0.76	0.57
0.416	0.625	0.883	FeO	2.40	1.60	1.20
0.422	0.633	0.845	MnO	2.36	1.57	1.18

The analyses of ores, fluxes, and fuel are assembled in Table XXXIV, which gives the summary of the calculation. The ore for which the charge is to be calculated is a low-grade basic roasted sulphide copper ore; there are available a high-grade siliceous oxide copper ore to furnish the SiO_2 that is necessary, and a roasted gold-bearing pyrite which is to be used to combine with the excess sulphur of the roasted ore. The weight of the charge is to be 1,000 lb. and the amount of coke used 14 per cent.

1. *SiO_2 Available in 100 Lb. of Siliceous Copper Ore.*

15 lb. FeO × 0.416 = 6.2 lb. SiO_2 required
8 lb. CaO × 0.535 = 4.3 lb. SiO_2 required
3 lb. MgO × 0.750 = 2.3 lb. SiO_2 required
9 lb. Al_2O_3 × 0.873 = 7.9 lb. SiO_2 required

Total 20.7 lb. SiO_2 required
43.0 lb. SiO_2 present

Remain 22.3 lb. SiO_2 available for fluxing purposes

[1] FURMAN, *School Mines Quart.*, 1896, XVIII, 1; BARBOUR, *Mining Sci. Press*, 1909, XCIX, 664; MOSTOWITSCH, *Metallurgie*, 1912, IX, 559.

[2] HOFMAN, "General Metallurgy," 1913, p. 435.

TABLE XXXIV.—CALCULATION OF CHARGE, SUMMARY

Charge component		SiO_2		FeO		CaO		MgO		Al_2O_3		S		Cu	
Name	Weight, pounds	Per cent	Weight	Per cent	Weight	Per cent	Weight	Per cent	Weight	Per cent	Weight	Per cent	Weight	Per cent	Weight
Roasted sulphide copper ore	1,000	25.0	250.0	49.0	490.0	3.0	30.0	4.0	40.0	7.0	70.0	5.0	50.0 (42.5)	2.0	20.0
Siliceous oxide copper ore	273	43.0	160.0	15.0	55.8	8.0	29.8	3.0	11.2	9.0	33.5	...	....	12.0	44.6
Roasted pyrite	99 92	4.0	3.7	80.0	[a]5.1	....	.....	..	....	2.0	1.8	3.0	2.8		
Limestone	79	2.0	1.6	....	.....	53.0	41.9	1.0	0.8	1.0	0.8				
Coke ash	(28)	30.0	8.4	31.0	8.7	8.0	2.2	...	....	16.0	4.5				
Total	1,543	....	423.7	....	559.6	....	103.9	...	52.0	....	110.6	...	45.3	...	64.6
Slag	.....	33.8	.....	44.8	.....	8.3	.....	4.2	....	8.8					

[a] The remainder goes to matte.

2. *FeO Available in* 100 *Lb. of Roasted Pyrite.*

2 lb. $Al_2O_3 \times 0.873$ = 1.7 lb. SiO_2 required
4.0 lb. SiO_2 present

Remain 2.3 lb. SiO_2 requiring FeO
2.3 lb. $SiO_2 \times 2.4$ = 5.5 lb. FeO required for SiO_2

3.0 lb. S $\times$ 9/4 = 6.7 lb. FeO required to combine with S present forming FeS

Total 12.2 lb. FeO required
80.0 lb. FeO present

Remain 67.8 lb. FeO available to form FeS with excess—S of roasted ore

3. *CaO Available in* 100 *Lb. of Limestone.*

1 lb. $Al_2O_3 \times 0.873$ = 0.9 lb. SiO_2 required
1 lb. MgO $\times$ 0.750 = 0.8 lb. SiO_2 required

Total 1.7 lb. SiO_2 required for bases other than CaO
2.0 lb. SiO_2 present

Remain 0.3 lb. SiO_2 to be fluxed by CaO
0.3 lb. $SiO_2 \times 2.4$ = 0.7 lb. CaO required
53.0 lb. CaO present

Remain 52.3 lb. CaO available for fluxing

4. *SiO_2 Required for Fluxing* 100 *Lb. of Roasted Ore*

49.0 lb. FeO $\times$ 0.416 = 20.5 lb. SiO_2 required
3 lb. CaO $\times$ 0.535 = 1.6 lb. SiO_2 required
4 lb. MgO $\times$ 0.750 = 3.0 lb. SiO_2 required
7 lb. $Al_2O_3 \times$ 0.873 = 6.1 lb. SiO_2 required

Total 31.1 lb. SiO_2 required
25.0 lb. SiO_2 present

Remain 6.1 lb. SiO_2 to be added

or for 1,000 lb. ore, 61 lb. SiO_2. One hundred pounds siliceous ore (see (1)) have available 22.3 lb. SiO_2; hence $100:22.3 = x:61$, $x = 273$ lb. siliceous ore are necessary.

5. *Roasted Pyrite Required for Combining with S in Roasted Ore.*

50.0 lb. S present
7.5 lb. S oxidized (= 15 per cent)

42.5 lb. S remaining to form matte

Composition of matte: Cu 40, Fe 32, S 28 per cent.

$$\text{Now S:Fe} = 28:32 = 42.5:x$$
$$x = 48.6 \text{ lb. Fe} = 62.5 \text{ lb. FeO.}$$

Roasted pyrite contains 67.8 lb. available FeO.

$$100:67.8 = x:62.5$$
$$x = 92 \text{ lb. roasted pyrite.}$$

6. *Matte to be Formed.*—The 1,000 lb. of roasted sulphide ore contain 50 lb. S; assuming a loss of 15 per cent by oxidation, there remain 42.5 lb. S to form matte. There are present from the roasted ore 20 lb. Cu, and from the siliceous oxide ore $0.12 \times 273 = 32.8$ lb. Cu; or $20 + 32.8 = 52.8$ lb. Cu. It is desired to produce a matte containing about Cu 40, Fe 32, S 28 per cent. The 45.3 lb. S in the roasted ore and roasted pyrite would form 161.8 lb. matte containing 64.7 lb. Cu. There are present only 52.8 lb., hence 11.9 lb. have to be added. The siliceous oxide ore necessary to furnish these 11.9 lb. of Cu is $100:12 = x:11.9, x = 99$ lb. The 99 lb. (see (1)) contain $99 \times 0.223 = 22.1$ lb. excess SiO_2 which are to be slagged with CaO; the CaO required is $22.1 \times 1.86 = 41.1$ lb. As 100 lb. limestone (see (3)) contain 52.3 lb. available CaO, there will be required, $100 : 52.3 = x:41.1$, $x = 79$ lb. of limestone.

7. *Coke and Coke Ash.*—The coke required is 14 per cent of the weight of the charge, or $1,543 \times 0.14 = 216$ lb., which with 13 per cent ash furnish $216 \times 0.13 = 28$ lb. ashes. The fluxes necessary for 100 lb. coke ashes are found as follows:

31 lb.	$FeO \times 0.416$	= 12.9 lb. SiO_2 required
8 lb.	$CaO \times 0.535$	= 4.3 lb. SiO_2 required
16 lb.	$Al_2O_3 \times 0.873$	= 13.9 lb. SiO_2 required
Total		31.1 lb. SiO_2 required
		30.0 lb. SiO_2 present
Remain		1.1 lb. SiO_2 in excess

which can be neglected, the coke ash being practically self-fluxing.

8. *Reduction of Calculated Weights.*—The reduction of the calculated weights of 1,543 lb., required by 1,000 lb. roasted ore to 1,000 lb. charge, is obtained by the charge factor 0.648, which is found by $1,543x = 1,000, x = 0.648$ The charge of 1,000 lb. will be made up of

Roasted ore	$1,000 \times 0.648$	= 648 lb.
Siliceous ore	372×0.648	= 241 lb.
Roasted pyrite	92×0.648	= 60 lb.
Limestone	79×0.648	= 51 lb.
Total		= 1,000 lb.

9. *Percentage Composition of Slag.*—The percentage composition of the slag made is determined by the slag factor, Table XXXIV (423.7 SiO_2 + 559.6

$FeO + 103.9\,CaO + 52.0\,MgO + 110.6\,Al_2O_3 = 1{,}250$, and $1{,}250x = 100)\cdot x = 0.08$. The slag is, therefore, SiO_2 33.8, FeO 44.8, CaO 8.3, MgO 4.2, Al_2O_3 8.8 per cent; it will form $1{,}543 : 1{,}250 = 100 : x$, $x = 81$ per cent of the weight of the charge. The 161.8-lb. matte present will form approximately 10.5 per cent of the charge, the remaining 9.5 per cent are O, CO_2, and SO_2.

84. Management and Results.—The management of the furnace is practically the same as that of the partial pyritic furnace, given in §94; it is passed over here.

As regards the elimination of As, Sb, and Bi, Gibb[1] gives an example in which, with a roasted ore containing Cu 10.60, As 0.102, Sb 0.025, Bi 0.01 per cent, there was eliminated by volatilization and scorification in smelting for a 33 per cent copper matte, of the As 26.1, the Sb 27.1, and the Bi 51.0 per cent.

The heat efficiency of the operation is from 65 to 70 per cent.

The loss in copper endured is that carried off by the slag and the gases; the slag loss at present is under 0.4 per cent; the gas loss aries too greatly to permit giving any figure. Dust losses have been greatly reduced in recent years.

An account of stock and a thermal balance will be given in connection with the reducing smelting of a roasted sulphide Ni-Cu ore (§96), as modern examples are available, which is not the case with Cu ore.

The working results of a few examples of practice are given in Tables XXX and XXXI.

(b) Pyritic Smelting

85. Pyritic and Partial Pyritic Smelting of Raw Sulphide Ore for Matte.[2]—Pyritic smelting is a process in which the oxidation of pyritic ore and the formation of the slag furnish the heat necessary to carry on the operation; the leading exothermic reaction is $2FeS + SiO_2 + O_5 = 2FeO\cdot SiO_2 + 2SO_2$. Partial pyritic smelting is one in which the deficiency of pyritic ore is made up by addition of carbonaceous fuel to the charge; the lack of heat by the pyritic reaction is supplemented by that of carbon combustion, $C + O_2 = CO_2$, through the O of the blast. Usually there is added to the true pyritic charge a small amount of

[1] *Trans. A. I. M. E.*, 1903, XXXIII, 657.

[2] RICKARD, T. A., "Pyrite Smelting," reprint of articles published in the *Eng. Mining J.*, 1903–05; STICHT, "History of Pyritic Smelting," *Trans. Australasian Inst. Mining Eng.*, 1906, XI, 1; "Pyritic Smelting," *Metallurgie*, 1906, III, 105, 149, 222, 256, 265, 386; PETERS, E. D., "Principles of Copper Smelting," 1907, pp. 213–338; "Practice of Copper Smelting," 1911, 205, 243; STICHT, "Mining and Smelting at Mount Lyell," *Metallurgie*, 1906, III, 563, 591, 638, 664, 686, 709, 760, 788; *Mineral Ind.*, 1907, XVI, 385–442; KROUPA, *Oesterr. Jahrb.*, 1904, LII, 82 (comments by STICHT in *Metallurgie*, 1906, III, 105); CARPENTER, *Mineral Ind.*, 1900, IX, 690, *Trans. A. I. M. E.*, 1900, XXX, 1128; NICHOLLS, "Pyrite Smelting at Tilt Cove," *Eng. Mining J.*, 1908, LXXXVI, 462; ALABASTER and WINTLE, *Trans. Inst. Min. Met.*, 1905–06, XV, 269; GUESS, *Eng. Mining J.*, 1910, XC, 866; 1911, XCI, 557; 1912, XCIII, 113; 1912, XCIV, 925; WRIGHT, *Mining Sci. Press*, 1906, XCII, 124, 237; PRATT, *Eng. Mining J.*, 1913, XCV, 1191; EMRICH, *Met. Chem. Eng.*, 1913, XI, 327; WRIGHT, *Eng. Mining J.*, 1913, XCVI, 825; Negative Results: *Eng. Mining J.*, 1907, LXXXIV, 343 (BEARDSLEY), 601, 603 (LANG), 1079 (HIXON), 1033 (MOORE), 1130 (FULTON), 1223 (GRABILL); 1908, LXXXV, 175 (KOCH), 325 (FOWLER), 373 (BEARDSLEY); "Iron Sows," *Eng. Mining J.*, 1904, LXXVIII, 93 (MYERS and REYBOLD). GUESS, *Bull. Can. Mining Inst.*. No. 24, Feb., 1914, p. 87.

coke, from 1 to 3 per cent, which, however, does not reach the focus (the zone of active oxidation by the blast), but is oxidized higher up in the furnace by SO_2. Pyritic furnaces have worked for days at a time without any coke whatever, hence the division between entire and partial pyritic smelting in practice is not clearly defined. However, the statement that partial pyritic smelting begins with a sufficient addition of coke to be burnt in part by the O of the air instead of the SO_2 of the gases, and thus weakens the pyritic effect of the blast, comes close to the truth, and 3 per cent coke appears to be this amount. The three essential requirements for pyritic smelting are pyritic ore, free SiO_2, and air. The ore and silica should be coarse.

Pyrite (FeS_2) loses 1 atom S at 700° C., leaving behind what is practically FeS, and this, upon raising the temperature above 1,200° C.[1] (see curve, Fe—S, of Friedrich, in §100), gives up some of its S, leaving behind mixtures of FeS and Fe in which the Fe increases as the temperature rises.

Silica (SiO_2) must be free in order that it may combine readily with FeO at the moment when this is formed, as is the case in converting matte, the union being attended by evolution of heat.[2] Combined SiO_2 is not only non-available as a heat- and slag-forming agent a being, already united with a base, but is detrimental to the process, in that it absorbs heat by having to be liquefied; and in pyritic smelting the excess heat over that which is actually required is very small under the most favorable conditions.

Air has to be supplied in much larger quantities than in a reducing fusion, as the O required both by the Fe and the S is greater than that by the C of the 13 ± per cent coke in the latter process. If both FeS and C are present in the charge, the C will preempt all the O it requires to form CO or CO_2, and only the excess O will be available for FeS. But the oxidation of C creates not only a high temperature where it burns, but it furnishes a hot ascending gas current, which assists a premature melting of the readily fusible FeS (see §100); the latter then runs down unoxidized through the column of coke and collects, little changed, below the level of the tuyères.

The interior of a pyritic furnace has a very different appearance from one in which C forms the heat-giving constituent. In the latter there is a slowly downward-moving charge of ore, flux, and fuel, carried more or less by the boshes and the column of coke in front of the tuyerès; the jackets of the smelting zone are slightly coated with half-fused charge, and at the tuyère level the noses of the otherwise bright tuyères are short. Vertical sections through the smelting zone show the furnace to have about the same appearance when in or out of blast. Figures 97 to 98 by Freeland[3] represent the oval furnace, formerly used by the Ducktown Sulphur, Copper and Iron Co., Isabella, Tenn., running with 2.75 per cent coke on a pyrrhotite ore. They show that there has been formed a bosh extending along the side and end walls, leaving open in the center a channel (converting slit). It consists of porous friable gangue carrying the

[1] LE CHATELIER and ZIEGLER, *Bull. soc. d'Enc.*, 1902, p. 368; *Metallographist*, 1903, VI, 19.
[2] HOFMAN, "General Metallurgy," 1913, p. 101.
[3] *Eng. Mining J.*, 1903, LXXV, 664

charge; its position, however, is not stationary nor its form fixed. As the furnace forms its own pyritic bosh, the question of bosh in the jackets is not of paramount importance, but rather the temperature of their cooling water; thus at Kyshtim, Siberia, the temperature of the lower jackets is kept low in order to obtain a pyritic bosh of the desired thickness.

The tuyères in the furnace are mostly dark, light being rarely discernible when they are punched; a bar has been driven in from one side and withdrawn from the other with the naked hand. This proves that the tuyères are bridged, that the melted charge passes downward in the spaces between them, and that the hot fusion zone lies above. The blast, warmed and finely divided in its passage through the porous boshes, must be delivered upward into the fusion zone against the descending streamlets of FeS and the quartz fragments of the charge, and exerts there its powerful oxidizing effect. Sticht,[1]

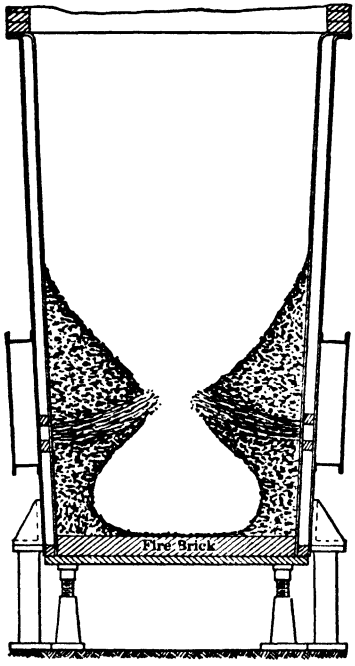

FIG. 97.—Vertical section through pyritic blast-furnace.

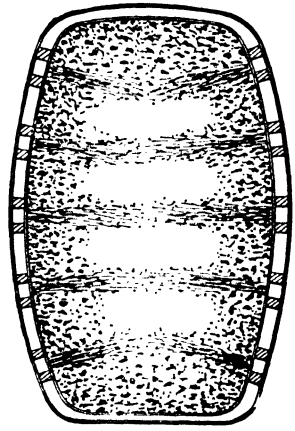

FIG. 98.—Horizontal section through pyritic blast-furnace.

smelting a pyritic ore at Mount Lyell with 1.25 per cent coke, noted a similar porous bosh which consisted of quartz fragments and slag, and is free from Fe_2O_3 or Fe_3O_4, CaO, and particles of matte.

Partial pyritic smelting standing between true pyritic and reducing smelting will show some of the phenomena of both processes.

The first experiments in pyritic smelting were those of John Hollway[2] with pyrite from Rio Tinto. In 1889 L. Austin[3] did some work in Toston Mont.; in 1891 R. Sticht made the first successful runs in this country at Boulder Valley, Mont.; in 1893 the Bi-Metallic Co. ran a pyritic plant at Leadville,

[1] *Metallurgie*, 1906, III, 115.

[2] "A New Application of Bessemer's Process of Rapid Oxidation, by which Sulphides are Utilized for Fuel," *Soc. of Arts*, Apr. 12, 1879.

[3] *Trans. A. I. M. E.*, 1887–88, XVI, 257.

Colo.[1] The process lay dormant for a while until it received a new impetus in 1895, when Sticht introduced it at Mount Lyell, Tasmania.

Pure pyritic smelting is becoming rare, however. At Mount Lyell, where it was successfully carried on for many years, the procedure has recently been changed. At present, all the siliceous ores from the North Lyell mine are being treated by gravity concentration followed by flotation. The concentrates are sintered on Dwight-Lloyd sintering machines and then smelted in the blast furnace. Whereas the former practice required only 3 to 5 per cent coke, the use of sintered material requires 12.8 per cent coke, thus putting the operations in the semi-pyritic class. One smaller furnace now has the same output as three on the old basis and a great saving in labor, fluxes, stores, etc. has been effected.

A change is also taking place in the Tennessee district where pyritic smelting has been used with pyrrhotite ores carrying ± 2 per cent copper. Selective flotation has been successfully applied to this material. The copper concentrate produced will probably be sintered and smelted in a partial pyritic way.

Pyritic smelting is being used by the Granby Consolidated Mining Co. at Anyox, B. C.; also at Rio Tinto and a few other places.

One interesting example of pyritic smelting is at the plant of the Siemens-Kwarzchana Copper Co. in the Caucasus.[2] The ore available is of two grades,

TABLE XXXV.—ANALYSES OF ORES AT THE SIEMENS-KWARZCHANA COPPER CO.

	Cu	S	Fe	Zn	Pb	Bi	As	SiO_2	CaO
A ore	7.1	42.25	34.65	3.67	0.72	0.01	1.46	3.54	0.2
B ore	4.65	44.58	37.16	2.87	0.52	0.015	1.24	3.1	0.2

as shown in Table XXXV, and quartzite is available on the property containing SiO_2 78, Al_2O_3 8.5, FeO 3.85, CaO 1.2 per cent. The furnace used is water-jacketed throughout and is 3,000 by 11,000 mm. at the tuyères by 5.45 m. tuyères to charging floor. The air pressure is 2,200 to 2,400 mm. water. A typical charge is A ore 125, sinter 45, quartz 20 to 24, coke 4. When using B ore the charge is ore 125, sinter 36, quartz 20 to 24, coke 4, slag 14. The matte produced runs 35 to 40 Cu and the slag analyzed approximately SiO_2 30, FeO 50, CaO 2.5, Al_2O_3 9.0, Cu 0.45 per cent. The sinter is produced in cast-iron pots.

86. Pyritic Smelting Proper. (1) *The Slag.*—From what has been said regarding pyritic smelting, it is clear that a high formation temperature of the pyritic slag is of paramount importance for the process, as the charge has to stand unmelted to enable the blast to attack the FeS, and form FeO and SO_2, when the FeO must combine instantaneously with SiO_2, as in converting matte; the ferrous silicate formed will then dissolve gradually the remaining refractory slag-forming constituents of the charge and form with them the final slag.

Referring to Table XXXVI, which gives the formation temperature of some ferrous silicates, it is seen that, omitting the impossible $4RO \cdot SiO_2$, the ferrous singulosilicate $2RO \cdot SiO_2$ has the highest formation temperature (1,270° C.);

[1] DOOLITTLE and JARVIS, *Trans. A. I. M. E.*, 1910, XLI, 709.

[2] OFFERHAUS, *Eng. Mining J.-Press*, 1922, CXIV, 589.

the silicate $3RO \cdot SiO_2$ comes next (1,140° C.); then follow the sesquisilicate $4RO \cdot 3SiO_2$, with 1,120° C.; and the bisilicate $RO \cdot SiO_2$, with 1,110° C. The silicate degree is then a function of the temperature, and the formation temperature falls as the silicate degree rises. The aim must be, therefore, to form a ferrous singulosilicate, and the three factors FeS, O, and SiO_2 have to be so balanced as to make this possible. If there is too much FeS, which is equivalent to a lack of O, there is too little oxidation; and this means lack of heat in the combustion zone, accompanied by the passage of undecomposed FeS through the blast followed by collection below the tuyère level. If for a given amount of FeS and O there is an excess of SiO_2, this will accumulate in the shaft (silica sow) and block the smelting; if there is a lack, some Fe will be peroxidized to Fe_3O_4 or

TABLE XXXVI.—FORMATION TEMPERATURE OF SOME FERROUS SILICATES[a]

Formula of silicate	Chemical composition		Formation temperature degrees centigrade
	SiO_2 per cent	FeO per cent	
$2RO \cdot SiO_2$	29.20	70.80	1,270
$3RO \cdot 2SiO_2$	35.70	64.30	1,140
$4RO \cdot 3SiO_2$	38.46	61.54	1,120
$RO \cdot SiO_2$	45.45	54.55	1,100

[a] HOFMAN, *Trans. A. I. M. E.*, 1899, XXIX, 682.

Fe_2O_3, which, taken up by the slag, decreases its fusibility and may stop the furnace. As a slag consisting solely of SiO_2 and FeO does not separate well from the matte, it has to be lightened by some earthy base. The percentage of CaO, including its equivalents of MgO, BaO, Al_2O_3, should not be less than 10 per cent; the usual range is 12 and 16 per cent (see Table XXX). The percentage of Al_2O_3 in any case must be low; perhaps 7 per cent is the limit, usually it does not exceed 5 per cent. The slag of Mount Lyell,[1] SiO_2 32.47, FeO 52.15, CaO 4.77, Al_2O_3 7.22, BaO 0.90, S 0.88, Cu 0.39 per cent, Ag 0.189 oz. per ton, is a singulosilicate. Other slags are given in Table XXX.

87. Fuel and Blast.[2]—The rôles that fuel and blast play in pyritic smelting have been discussed in §85. There remain the calculation of the blast required and the consideration of hot blast.

Quantity of Air.—The calculation of the cubic feet of air per minute required must be based upon the amount of FeS that is to be oxidized, and this is best referred to the square foot of hearth area. Assume that the smelting power of the furnace is 6 tons of charge per square foot hearth area in 24 hr., equal to 500 lb. per hour; that the charge contains 50 per cent FeS_2; and that this loses three-sevenths of its S by sublimation. The 500-lb. charge corresponds to 250 lb. FeS_2 (46.7 Fe, 53.3 per cent S) or 116.8 lb. Fe and 133.2 lb. S. With three-sevenths of the S volatilized, this is changed to 116.8 lb. Fe and 76.1 lb. S. Let 90 per cent of this be oxidized and 10 per cent go to the formation of matte; the blast has to be supplied for 105.1 lb. Fe and 68.5 lb. S. Now $Fe:O = 56:16 = 105.1:x$, $x = 30.0$ lb. O; and $S:O_2 = 32:32 = 68.5:y$, $y = 68.5$; hence

[1] *Mineral Ind.*, 1907, XVI, 435.

[2] WALTER, *Eng. Mining J.*, 1913, XCIII, 797.

there are required 30.0 + 68.5 = 98.5 lb. O per hour with 98.5 × 3.33 or 328.3 lb. N = 426.8 lb. air = 426.8 × 13.067 (for 15° C.) or 5,577 cu. ft. air per hour = 92.9 cu. ft. air per minute. Assuming an efficiency of 90 per cent gives 103 cu. ft. as the amount of air required. Wright[1] found at Keswick, Cal., that his furnace, with a charge containing 50 per cent FeS_2 and treating 11 tons of charge per square foot hearth area in 24 hr., did good work when it received per minute per square foot hearth area 365 cu. ft. air; this would oxidize 7 lb. FeS_2 per minute, and the furnace gases would contain 12 per cent by vol. SO_2.

Preheating Air Blast.—Heating the blast has been the subject of much discussion. The idea has been prevalent that hot blast would raise the degree of concentration of the matte. Sticht has shown that not only does it not effect this, but that the result is just the reverse, because hot blast causing a more siliceous slag to be formed is equivalent to a lower degree of oxidation. The main reason for the higher concentration of matte with cold blast is that, in order to produce the same heat, more cold air is required in a given time than hot air; the larger volume of air rises in the shaft to the point at which FeS begins to melt, and this, trickling down through a longer column of hot gangue matter, is exposed to oxidation for a longer period of time. At Mount Lyell the degree of concentration with hot blast was 7 into 1; with cold blast from 18 to 20 into 1, furnishing a matte with 40 per cent Cu, and could be made greater by additional blast if this was desirable. It is believed that not a single blast furnace doing true pyritic smelting is supplied with hot blast.

88. Chemistry of Pyritic Smelting.—In discussing the chemical reactions that take place in the blast furnace it is convenient to consider separately the ascending gas current and the descending ore charge. The blast of atmospheric temperature upon entering the furnace at the tuyère level comes in contact with the porous boshes and bridges, is warmed and, being further heated in traveling upward through melted descending charge, strikes, a short distance above, fused red-hot FeS trickling downward through siliceous gangue material; it oxidizes the FeS to FeO and SO_2, giving up its entire O; simultaneously, the FeO forms slag, while the gas mixture of N and SO_2, with a temperature of 1,200° C., rises in the shaft and preheats the descending charge; cooled by this to 700° C., it becomes charged with S vapor (FeS_2 + 700° C. = FeS + S), the amount at Mount Lyell averaged 1.7 per cent at a distance of 4 or 5 ft. below the top of the charge; the N + SO_2 + S vapor rises in the furnace to the top of the charge (250° C.), where the S ignites and burns. If the temperature of the stock line should sink below 250° C., the volatilization and ignition points of S, some S would be deposited and clog the passage of the gases. During the ascent of the gases the small amount of coke charged, < 3 per cent, is consumed by the reaction $SO_2 + C = S + CO_2$ + 27,940 cal., which assists in warming the charge. Table XXXVII gives analyses of Mount Lyell gases when the furnace was running normally, and Table XXXVII*a* similar data when running "wild,"

[1] *Eng. Mining J.*, 1905, LXXIX, 957.

and FeS was not being oxidized. The data in both tables refer to the former pyritic operations and not to present practice. The figures in Table XXXVII

TABLE XXXVII.—NORMAL GAS FROM PYRITIC FURNACE, MOUNT LYELL

No. of samples	Sample, distance beneath throat, feet	SO_2	CO_2	CO	O
5	2–2.5	6.64	5.08	0.16	0.84
4	2–2.5	7.95	3.075	none	1.50
4	2.5	8.925	5.45	none	0.70
13	2–3.5	7.88	5.93	0.02	0.35
5	3–3.5	6.12	7.86	none	0.66
14	6	8.44	4.50	none	0.4
[a]4	6	9.475	3.70	none	none
[a]1	6	10.60	4.40	0.2	none
[a]5	6–7	7.90	3.56	none	0.88

[a] From the preceding 14.

show a very small amount of free O, which varies very little in a distance of 2 to 7 ft. below the surface of the charge, and practically no CO, owing to the reaction $SO_2 + CO = S + CO_2$. In other words, the O entering at the tuyères is almost wholly consumed by the oxidation of the FeS, and the small amount remaining as free O is rendered innocuous by the great dilution with indifferent gas. As soon as the regular process is disturbed, the composition of tunnel-head gas changes (Table XXXVII*a*). The air rushes up through the charge, effecting only little oxidation; the percentage of O in the gases is high, and that of SO_2 low.

TABLE XXXVII*a*.—ABNORMAL GAS FROM PYRITIC FURNACE, MOUNT LYELL

Number of samples	Sample, distance beneath throat, feet	SO_2	CO_2	CO	O
1	2	22.40	4.20	none	3.40
1	2.5	2.40	0.20	0.2	14.60
5	2.5–2.75	5.26	1.78	0.07	11.29
5	3	3.02	3.16	none	11.08
1	3	1.20	1.10	none	16.70
7	3–3.5	2.59	4.73	0.03	6.91

Following the descending ore charge, it is convenient to distinguish three zones:

1. *The Zone of Preparatory Heating.*—The top of the charge is at 250° C., S vapor is burning over it, and air is rushing in through the feed doors at the rate perhaps of three times the volume of the ascending gas current. The

charge when introduced gives up quickly its hygroscopic water and more slowly that which is chemically combined; between 250 and 700° C. it absorbs heat from the gas current and some of its coke is oxidized by the SO_2 of the gases; at 700° C. pyrite begins to give off one molecule of S. With these changes the charge passes downward, at Mount Lyell for a distance of 7 or 8 ft., whereupon it reaches the oxidizing zone (2).

2. *The Zone of Oxidizing Smelting or Focus.*—This in the former practice at Mount Lyell extended downward to 2 or 3 ft. above the tuyères. The altered charge, now FeS + gangue + limestone, reaches the region of 880° C., where $CaCO_3$ is dissociated; lower down the FeS begins to fuse, trickles down over the pieces of SiO_2 and CaO in separate droplets or in assembled rivulets, and is met by the O of the blast; the FeS is oxidized and simultaneously combines with SiO_2 to Fe_2SiO_4; this hot ferrous singulosilicate, traveling over siliceous gangue matter and CaO, dissolves these in its downward course and slags them so that, arrived at the level of the tuyères, there is little of them left, with the exception of the silica boshes and bridges.

3. *The Zone of Adjustment.*—The melted slag matte which descends through the more or less open spaces between the bridged tuyères collects below these. Here the different silicate mixtures form a uniform mixture, and the matte tends to separate to some extent from the slag, although it is not given sufficient time and space to accomplish this satisfactorily, as both matte and slag leave the furnace together over the blast-trapping spout. The final separation takes place in the external fore hearth.

In the oxidation of FeS there is always left enough unaltered FeS to resulphurize any Cu that may have become oxidized in its downward course.

89. Management and Results.—The management of a pyritic furnace requires considerable care, as even a slight irregularity is likely to disturb the normal working. Thus, *e.g.*, the matte fall is likely to be irregular, owing to the slight changes in the ore, in the moisture of the air, or in the mechanical condition of the furnace, which hinder or favor the O from doing its proper work in the focus. At the same time the character of the slag formed may not change materially, although the amount will be decreased or increased.

The analyses of gases from normal work (Table XXXVII) show only a trace of free O and as much as 12 per cent by vol. SO_2; those from abnormal work (Table XXXVII*a*), much free O; the furnace makes a large amount of low-grade matte and a small amount of acid slag; simultaneously, the focus begins to cool. Correcting the evil by addition of coke or coke-and-slag charges will heat up again the lower part of the furnaces and cause the production of much low-grade matte. Regular pyritic smelting can then be started again, just as in blowing-in a pyritic furnace, where the start is made with a reducing fusion. When a furnace gets out of order, it is usually cheaper to blow it down and start fresh in an interval of 24 hr. instead of trying to doctor the patient. Thus, Sticht's campaigns lasted about 4 weeks.[1] The operations of blowing in, etc., which are similar to those in partial pyritic smelting, are discussed in §97.

[1] PETERS, "Principles," p. 305.

The elimination of As, Sb, Bi, and Pb in a pyritic furnace[1] is much greater than in a reducing fusion. Sticht[2] gave 70 per cent as the direct efficiency of his work at Mount Lyell; 35 per cent of the heat generated is absorbed by the chemical work of smelting and the fusion of the solid products; 35 per cent by dissociations preceding or accompanying the chemical reaction; the balance of 30 per cent is lost by radiation. An average of 11 years' work (including early experimental work, converting, and resmelting intermediary products), treating since 1907 ore with Cu 2.25 per cent and producing matte with Cu 44.3 per cent, gave Sticht a yield of Cu 85.72, Ag 92.57, Au 102.28 per cent.

(c) Partial Pyritic Smelting

90. Partial Pyritic Smelting of Raw Sulphide Ore for Matte.—The essential requirements for entire pyritic smelting were massive pyritic ore containing free SiO_2 and little Al_2O_3 and other bases. Such ores are not of frequent occurrence; most sulphide copper ores contain pyritic material disseminated through a gangue which is likely to run high in Al_2O_3. They are treated raw by partial pyritic smelting, a process in which the lack of heat from the oxidation of insufficient FeS is supplied by the use of carbonaceous fuel, and, in addition, sometimes by preheating the blast.

91. The Slag.—In pure pyritic smelting, the slags made are singulosilicates high in FeO and low in CaO and Al_2O_3; in the partial process they run high in SiO_2, low in FeO, high in CaO, and are likely to contain considerable amounts of Al_2O_3. Examples of slag compositions are shown in Tables XXX and XXXI. Temperatures of slags as flowing from the blast furnace measured by Clevenger[3] cover a range of 1,123 to 1,261° C. The part Al_2O_3 plays in these slags is often of great importance.[4] In general, Vogt has found[5] that, in slags with less than SiO_2 43 per cent and moderate amounts of Al_2O_3 (ratio, 3 CaR(= Fe·Mg·Mn):Al_2 > 1), the Al_2O_3 will act as a base. Lloyd[6] found in partial pyritic smelting that, when the SiO_2 content of the slag exceeded 44 per cent, Al_2O_3 began to act as an acid and make the slag bad. Hofman has[7] shown that if, in the singulosilicate with SiO_2 32.10, FeO 35.90, CaO 32.00 per cent and a formation temperature of 1,150° C., the SiO_2 is replaced by Al_2O_3, the formation temperature rises, that if the CaO is similarly replaced, the formation temperature falls slightly. If therefore both SiO_2 and CaO are replaced by Al_2O_3, the formation temperature is likely to remain constant. This corresponds in part to the practice usual with a high-CaO slag, of lowering the percentage of SiO_2 with an increase in that of Al_2O_3. Some furnacemen assume that Al_2O_3 acts always as an acid, add the SiO_2 and Al_2O_3, and figure their charge to form a

[1] LANG, *Eng. Mining J.*, 1904, LXXVIII, 461.

[2] *Mineral Ind.*, 1907, XVI, 435.

[3] *Met. Chem. Eng.*, 1913, XI, 447.

[4] *Eng. Mining J.*, 1908, LXXXVI, 107, 177 (HEBERLEIN); 264, 270 (SHELBY); 483 (BRETHERTON); 730 (KOCH); 1111 (HOOPER); 1909, LXXXVII, 222 (BEARDSLEY).

[5] SMITH, *Eng. Mining J.*, 1910, XC, 1261.

[6] PETERS, *Mineral Ind.*, 1909, XVIII, 245.

[7] *Trans. A. I. M. E.*, 1899, XIX, 717; "General Metallurgy," 1913, p. 461.

TABLE XXXVIII.—SLAG COMPOSITIONS: $x(CaO.SiO_2) + Y(2FeO.2SiO_2)$
($g.SiO_2 = g.1.07\ CaO + g.0.416\ FeO$)

Total, 80			82		84		86		88		90		92		94		96		98		100	
CaO	FeO	SiO_2	FeO	SiO_2	FeO	SiO_2	FeO	SiO_2	FeO	SiO_2	FeO	SiO_2	FeO	SiO_2	FeO	SiO_2	FeO	SiO_2	FeO	SiO_2	FeO	SiO_2
10.0	41.9	28.1	43.3	28.7	44.7	29.3	46.1	29.9	47.5	30.5	48.9	31.1	50.4	31.6	51.8	32.2	53.2	32.8	54.6	33.4	56.0	34.0
11.0	40.4	28.6	41.8	29.2	43.2	29.8	44.6	30.4	46.0	31.0	47.4	31.6	48.9	32.1	50.3	32.7	51.7	33.3	53.1	33.9	54.5	34.5
12.0	38.9	29.1	40.3	29.7	41.7	30.3	43.1	30.9	44.5	31.5	45.9	32.1	47.4	32.6	48.8	33.2	50.2	33.8	51.6	34.4	53.0	35.0
13.0	37.5	29.5	38.9	30.1	40.3	30.7	41.7	31.3	43.1	31.9	44.5	32.5	46.0	33.0	47.4	33.6	48.8	34.2	50.2	34.8	51.6	35.4
14.0	36.0	30.0	37.4	30.6	38.8	31.2	40.2	31.8	41.6	32.4	43.0	33.0	44.5	33.5	45.9	34.1	47.3	34.7	48.7	35.3	50.1	35.9
15.0	34.6	30.4	36.0	31.0	37.4	31.6	38.8	32.2	40.2	32.8	41.6	33.4	43.1	33.9	44.5	34.5	45.9	35.1	47.3	35.7	48.7	36.3
16.0	33.1	30.9	34.5	31.5	35.9	32.1	37.3	32.7	38.7	33.3	40.1	33.9	41.6	34.4	43.0	35.0	44.4	35.6	45.8	36.2	47.2	36.8
17.0	31.6	31.4	33.0	32.0	34.4	32.6	35.8	33.2	37.2	33.8	38.6	34.4	40.1	34.9	41.5	35.5	42.9	36.1	44.3	36.7	45.7	37.3
18.0	30.2	31.8	31.6	32.4	33.0	33.0	34.4	33.6	35.8	34.2	37.2	34.8	38.7	35.3	40.1	35.9	41.5	36.5	42.9	37.1	44.3	37.7
19.0	28.7	32.3	30.1	32.9	31.5	33.5	32.9	34.1	34.3	34.7	35.7	35.3	37.2	35.8	38.6	36.4	40.0	37.0	41.4	37.6	42.8	38.2
20.0	27.2	32.8	28.6	33.4	30.0	34.0	31.4	34.6	32.8	35.2	34.2	35.8	35.7	36.3	37.1	36.9	38.5	37.5	39.9	38.1	41.3	38.7
21.0	25.8	33.2	27.2	33.8	28.6	34.4	30.0	35.0	31.4	35.6	32.8	36.2	34.3	36.7	35.7	37.3	37.1	37.9	38.5	38.5	39.9	39.1
22.0	24.3	33.7	25.7	34.3	27.1	34.9	28.5	35.5	29.9	36.1	31.3	36.7	32.8	37.2	34.2	37.8	35.6	38.4	37.0	39.0	38.4	39.6
23.0	22.9	34.1	24.3	34.7	25.7	35.3	27.1	35.9	28.5	36.5	29.9	37.1	31.4	37.6	32.8	38.2	34.2	38.8	35.6	39.4	37.0	40.0
24.0	21.4	34.6	22.8	35.2	24.2	35.8	25.6	36.4	27.0	37.0	28.4	37.6	29.9	38.1	31.3	38.7	32.7	39.3	34.1	39.9	35.5	40.5
25.0	20.0	35.0	21.4	35.6	22.8	36.2	24.2	36.8	25.6	37.4	27.0	38.0	28.5	38.5	29.9	39.1	31.3	39.7	32.7	40.3	34.1	40.9

bisilicate slag; others neglect the presence of Al_2O_3, and figure their slag as being made up of a mixture of a bisilicate of lime, $CaO \cdot SiO_2$, and a singulosilicate of iron $2FeO \cdot SiO_2$. Table XXXVIII, by C. S. Witherell, gives the amounts of FeO and SiO_2 necessary for slags with from 10 to 25 per cent CaO, for a range of the total of the constituents of from 90 to 100 per cent.

Magnetite (Fe_3O_4) as a flux[1] is undesirable in partial pyritic smelting, as the reducing power of the ascending gas current is too weak to complete the reduction to FeO by solid C; hence Fe_3O_4 is likely to enter the slag and reduce its fusibility and fluidity, as well as to be taken up by the matte. The presence of Fe_3O_4 in some slags is explained by Wright[2] as due to the reaction $FeS + 10Fe_2O_3 = 7Fe_3O_4 + SO_2$. According to Hofman,[3] the percentage of Fe_3O_4 in a slag is governed by the percentage of SiO_2 to which it is inversely proportional.[4]

92. Fuel and Blast.—In §85 the line of separation between entire and partial pyritic smelting was provisionally drawn at 3 per cent coke. In Table XXX the amount of coke used in partial pyritic smelting is seen to be about 8 per cent and upward of the weight of the charge. The less the weight of coke required to furnish the heat necessary for smelting, the larger will be the amount of O available for FeS in a given volume of blast. The percentage of coke required can be diminished by heating the blast,[5] with the result that the pyritic effect in the furnace will be increased. Heating the blast to 200 or 300° C. will make a marked difference in the degree of concentration.[6] Experiments in substituting oil for coke have been made at Van Anda, B. C., by Kiddie[7] and at Tucson, Ariz., by Waters.[8]

93. Chemistry.—Detailed investigations into the chemistry of partial pyritic smelting are lacking. The blast entering through the tuyères will find the smelting zone higher and more narrowed than in a reducing fusion, and lower as well as less narrowed than in pure pyritic work. It will oxidize mainly coke and in a less degree some of the FeS that is trickling downward. Above the smelting zone the ascending gas current will consist of N, CO_2, CO, SO_2, and some free O; the oxidizing power of the O will be greatly weakened by the presence of CO_2 and SO_2. The O will act upon FeS, whether its oxidizing power is strong enough to have a converting effect, as in the smelting zone, or only a roasting effect will be determined by the temperature and by the volume of the other gases in the current. Thus, Wright[9] found that combustion of S ceased

[1] *Eng. Mining J.*, 1907, LXXXIII, 817 (WELLS); 1909, LXXXVII, 962 (BENNETTS); LXXXVIII, 367 (RIZO); 742 (SHELBY).

[2] *Eng. Mining J.*, 1913, XCVI, 825.

[3] *Mineral Ind.*, 1913, XXII, 471.

[4] See §100, Fe_3O_4 in matte; and §134, Great Falls basic converter.

[5] *Eng. Mining J.*, 1902, LXXIII, 525 (GRABILL); 1906, LXXXII, 598 (KIDDIE), 698 (GIROUX); 1907, LXXXII, 692; *Mining Sci.*, 1908, LVII, 46 (PARRY); *Mining J.*, 1908, LXXXIII, 113 (MOORE); *Electrochem. Met. Ind.*, 1906, IV, 420 (GIROUX); *Trans. A. I. M. E.*, 1904, XXXIV, 422 (BRETHERTON); see HOFMAN, "General Metallurgy," §321 and following.

[6] PETERS, *Mineral Ind.*, 1908, XVII, 293.

[7] *Eng. Mining J.*, 1911, XCII, 434.

[8] *Op. cit.*, 1913, XCVI, 203.

[9] "Pyrite Smelting," p. 227.

in an atmosphere containing 12 per cent by vol. SO_2. The gas current will be charged with S vapor at 700° C., and this will burn at the surface of the charge. It may be noted that in most partial pyritic furnaces the volume of blast forced into the furnace is so large that the top of the charge is usually at a red heat. In other words, in order to obtain any considerable pyritic effect in the presence of coke, it is essential to have a large volume of air that unconsumed O may reach the region above the smelting zone and have there some oxidizing effect upon FeS. The overlying bed of charge is not sufficiently deep to take up most of the heat, which causes the top to become heated. The atmosphere in the furnace will have hardly any reducing power whatever. This is shown by the two gas analyses of Herman,[1] which showed CO_2 (from fuel) 8.3, CO_2 (from limestone) 2.6, SO_2 2.5, CO 2.15, O 8.00 per cent by vol.; and CO_2 (from fuel) 14.1 CO_2 (from limestone) 3.1, SO_2 3.5, CO 3.2 per cent by vol., O n.d. Furnace gases from the Copper Queen smelter contained 10 per cent by vol. O. Dunn[2] gives the following analyses: SO_2 1.274, SO_3 0.086, CO_2 6.493, H_2O 3.490, As_2O_3 0.0091, O 10.18, N 78.13 per cent by vol.

In the descending ore charge the changes are probably the following: There will be first a loss of hygroscopic and chemically combined H_2O; then the charge will become permeated by S vapor, which has a sulphurizing effect; farther down O, CO_2, and SO_2 will act upon coke, the O alone upon FeS, which may be converted into Fe_2SiO_4 or only into Fe_xO_y to combine later on with SiO_2. As the charge reaches the smelting zone proper, fusion will take place in the same way as in the regular reducing smelting.

94. Management and Results.—The characteristics of the furnace are a hot top and a cool tuyère region on account of the large volume of blast and the small amount of coke used to obtain a pyritic effect. The tuyères, therefore, have a tendency to become dark and hard, with the result that they have to be punched more or less continuously in order to get the air into the furnace; in fact, many plants have a special punching crew, which often has to use an air-hammer drill in its work.

Results of operations are given in Tables XXX and XXXI.

95. Calculation of Charge.[3]—The calculation of a charge with the aim of forming a slag of a certain degree of silication has been given in § 83. In many smelters it has become the custom to run the blast furnace on a slag containing definite percentages of SiO_2, FeO, CaO, and other bases, as is usually the case with the typical slags made in the lead blast furnace. As the calculation of such a charge differs from that given in § 83, it is carried through by the method with simultaneous equations, which is the most accurate.

A charge is to be calculated which is made up of ores, fluxes, and fuel given in Table XXXIX.

[1] *West. Chem. Met.*, 1905, I, 145.

[2] *Trans. A. I. M. E.*, 1913, XLVI.

[3] FURMAN, *School Mines Quart.*, 1896, XVIII, 1; BARBOUR, *Mining Sci. Press*, 1909, XCIX, 664; MOSTOWITSCH, *Metallurgie*, 1912, IX, 559.

TABLE XXXIX.—ORES, FLUXES, AND COKE FOR BLAST-FURNACE CHARGE

Charge component	SiO_2	Fe(Mn)O	Ca(Mg, Ba)O	Al_2O_3	S	Cu	Ash
First-class ore	50	17	1	8	17	6	
Coarse concentrate	20	33	1	5	30	10	
Limestone	3	..	50				
Coke	..	..	..	..	..	..	10
Coke ash	50	25	3	20			

The slag desired is SiO_2 41, FeO 22, CaO 23 (Al_2O_3 8) per cent; the matte shall contain Cu 45 per cent; the coke used shall be 8 per cent of the weight of the charge, which is to weigh 1,000 lb.

A summary of the calculation is given in Table XL.

1. *Materials Required to Produce* 100 *lb. of Slag.*—Let x = lb. first class ore, y = lb. coarse concentrate, z = lb. limestone; then $0.08\ (x+y+z)$ = necessary lb. of coke which carry $0.1 \times 0.08\ (x+y+z)$ lb. coke ash.

2. *Iron Required for Matte.*—The matte is to assay Cu 45 per cent; it will contain Fe 27.8 per cent, which corresponds to FeO 35.7 per cent.

The first-class ore contains Cu 6 per cent, which requires FeO 4.8 per cent for matte and leaves FeO $17-4.8=12.2$ per cent to be slagged.

The concentrate contains Cu 10 per cent, which requires FeO 7.9 per cent for matte and leaves FeO $33-7.9=25.1$ per cent to be slagged.

3. *Ore, Flux, and Coke Ash Required to Furnish SiO_2, FeO, and CaO for* 100 *lb. of Slag.*

The SiO_2 in 100 lb. slag $= 0.50x + 0.20y + 0.03z + 0.50 \times 0.008\ (x+y+z)$.
The FeO in 100 lb. slag $= 0.122x + 0.251y + 0.25 \times 0.008\ (x+y+z)$.
The CaO in 100 lb. slag $= 0.01x + 0.01y + 0.50z + 0.03 \times 0.008\ (x+y+z)$.

The three simultaneous equations are

$$0.504x + 0.204y + 0.034z = 41 \quad (1)$$
$$0.124x + 0.253y + 0.002z = 22 \quad (2)$$
$$0.01024x + 0.01024y + 0.50024z = 23 \quad (3)$$

Solved, they give: $x = 54.0$ lb. first-class ore
$y = 60.3$ lb. coarse concentrate
$z = 43.7$ lb. limestone

Total = 158.0 lb. ore and flux for 100 lb. slag

4. *Reference to* 1,000-*lb. Charge.*—To find the amounts of each of the charge components required in a 1,000-lb. charge, each has to be multiplied by a factor m; $158m = 1{,}000$, $m = 6.329$.

This gives: $54.0 \times 6.329 = 342$ lb. first-class ore
$60.3 \times 6.329 = 382$ lb. coarse concentrate
$43.7 \times 6.329 = 276$ lb. limestone

Total = 1,000 lb. charge

5. *Proof of Calculation.*—From Table XL, a 1,000-lb. charge a contains 58.7 lb. Cu, which corresponds to 130.5 lb. 45 per cent matte; this amount of matte

TABLE XL.—SUMMARY OF CALCULATION OF BLAST-FURNACE CHARGE

Charge component		SiO_2		Fe(Mn)O		Ca(Mg.Ba)O		Al_2O_3		S		Cu	
Name	Weight	Per cent	Weight	Per cent	Weight	Per cent	Weight	Per cent	Weight	Per cent	Weight	Per cent	Weight
First-class ore	342	50	171.10	17	58.1	1	3.4	8.0	27.4	17	58.1	6	20.5
Coarse concentrate	382	20	76.4	33	126.0	1	3.8	5.0	19.1	30	114.6	10	38.2
Limestone	276	3	8.3	.....	.....	50	138.0						
Coke ash	(8)	50	4.0	25	2.0	3	0.2	20.0	1.6				
Total	1,000	..	259.7	.....	186.1	.....	145.4	....	48.1	..	172.7	..	58.7
Deduct for matte	.....	..	.....	.....	46.6	(=36.2 Fe)	.....	....	....	..	35.5		
Leaves	.....	..	259.7	.....	139.5	.....	145.4	....	48.1	..	137.2	..	58.7
Slag factor 0.158	.....	41	.....	22	.....	23	.....	7.6					
Matte factor 0.766	.....	..	.....	27 Fe	.....	.....	.....	...	....	28	.....	45	

requires 46.6 lb. FeO; deducting 46.6 from 186.1 FeO present leaves 139.5 lb. to be slagged.

There are present in a 1,000-lb. charge 259.7 lb. SiO_2; the factor for reducing this figure to 41 is 259.7 n = 41, n = 0.158. Multiplying the totals of SiO_2, FeO, CaO, and Al_2O_3 of Table XL entering the slag by this factor gives: SiO_2 41, FeO 22, CaO 23, Al_2O_3 7.6, the desired ratio of the slag components.

6. *Pyritic Effect.*—The 130.5-lb. matte produced from the 1,000-lb. charge contain 130.5 × 0.272 = 35.5 lb. S. There are present 172.7 lb. S, hence 172.7 − 35.5 = 137.2 lb. = 79.4 per cent have to be burned off.

96. Thermal Balance Sheets of Some Partial Pyritic Smelting Operations.—Details of two thermal balance sheets are given, representing sulphide-ore treatment and matte concentration as carried out by the Ducktown Sulphur, Copper, and Iron Co., Isabella, Tenn., the data having been furnished by W. F. Lamareaux. There is added for sake of comparison a condensed balance sheet of the partial pyritic smelting of ore by the Washoe plant of the Anaconda Copper Mining Co., furnished by E. P. Mathewson.

These heat balances furnish an insight into the manner in which the heat has been generated, in which it has been utilized by chemical action and fusion, and in which it has been lost by radiation, convection, escaping gases, etc.

Before the thermal balance sheet can be cast, it is essential to prepare a theoretical balance sheet of the materials.

1. *Partial Pyritic Ore Smelting.*—The basis of calculation chosen is that of a 1,000-kg. charge with 50 kg. of coke. The ultimate analysis of the ore is Cu 2.55, Fe 26.8, S 17.27, SiO_2 28.38, CaO 8.11, MgO 3.83, Al_2O_3 3.39, Zn 2.93, O,CO_2, etc. 6.74 per cent. The rational analysis calculated from the ultimate and the known character of the mineral constituents shows that the charge is composed of chalcopyrite ($CuFeS_2$) 7.4, sphalerite (ZnS) 4.4, pyrrhotite (Fe_7S_8) 33.5, biotite ($(Al\ Fe)_2Si_4O_{16}$) 12.2, actinolite ($Ca(MgFe)_3Si_4O_{12}$) 17.1, calcite ($CaCO_3$) 10.4, quartz (SiO_2) 14.1, undetermined 0.9, total 100 per cent. The matte produced in the smelting had the following composition: Cu 16.0, Fe 49.8, S 24.9, SiO_2 0.8, CaO 0.3, insol. 2.1, undetermined 6.1 per cent.

In the theoretical balance sheet of materials given in Table XLI, it has been assumed, (*a*) that all the Cu has entered the matte, and that any Cu found in the slag is present as a matte pellet; (*b*) that the weight of the matte may be calculated from its analysis and the weight of the Cu in the charge, only Cu, Fe, Zn, and S being assigned to matte, the rest to slag; (*c*) that of the Zn not present in the matte, one-half has entered the slag as ZnS, the other has been carried off as ZnO in the gases. Of the materials entering the furnace and placed on the debit side, there remain to be determined the O, or air necessary for oxidation of constituents, and the accompanying moisture.

The O required by the charge is:

(*a*) $CuFeS_2$.—The whole is assumed to enter the matte unchanged.

(*b*) Fe to FeO.—Of the 202.0 kg. Fe furnished by 335.0 kg. Fe_7S_8, 57.1 kg. enter the matte and 144.9 the slag; all the Fe of the coke ash, *i.e.*, 1.1 kg., enters the slag, or 144.9 + 1.1 = 146 kg. Fe enter the slag as FeO. These require

(Fe:O) = 56:16 = 146:x). . . . . 41.7 kg. O.

(*c*) S to SO_2.—Of the 14.5 kg. S furnished by 44 kg. ZnS, 6.3 kg. are oxidized; of the 133 kg. S furnished by 335 kg. Fe_7S_8, 120.7 kg. are oxidized; all the S in the coke, 0.8 kg., is oxidized; or 6.3 + 120.7 + 0.8 = 127.8 kg. S are oxidized. These require ($S:O_2$ = 32:32 = 127.8:y). . . . . 127.8 kg. O.

(*d*) C to CO_2.[1]—All of the 42.0 kg. C of the coke are oxidized; they require therefore ($C:O_2$ = 12:32 = 42:0:z). . . . . 112.0 kg. O.

TABLE XLI.—THEORETICAL BALANCE SHEET OF MATERIALS OF ONE ORE CHARGE OF 1,000 KG.

	Debit						Credit		
	Mineral	Per cent	Weight, kilograms	Constituent	Per cent	Weight, kilograms	Matte, kilograms	Slag, kilograms	Gas, kilograms
Ore charge 1,000 kg.	$CuFeS_2$	7.4	74.0						
				Cu	34.6	25.6	25.6		
				Fe	30.5	22.6	22.6		
				S	34.9	25.8	25.8		
	ZnS	4.4	44.0						
				Zn	67.0	29.5	3.4	13.1	13.0
				S	33.0	14.5	1.7	6.5	6.3
	Fe_7S_8	33.5	335.0						
				Fe	60.4	202.0	57.1	144.9	
				S	39.6	133.0	12.3		120.7
	$(AlFe)_2Si_4O_{16}$	12.2	122.0						
				Al_2O_3	27.8	33.9		33.9	
				SiO_2	39.4	48.1		48.1	
				FeO	32.8	40.0		40.0	
	$Ca(MgFe)_3Si_4O_{12}$	17.1	171.0						
				CaO	13.4	22.9		22.9	
				MgO	22.4	38.2		38.2	
				FeO	9.0	15.4		15.4	
				SiO_2	55.2	94.5		94.5	
	$CaCO_3$	10.4	104.0						
				CaO	56.0	58.2		58.2	
				CO_2	44.0	45.8			45.8
	SiO_2	14.1				141.0		141.0	
	X	0.9				9.0		9.0	
Coke, 50 kg.				Fe	2.3	1.1		1.1	
				S	1.6	0.8			0.8
				SiO_2	8.4	4.2		4.2	
				Al_2O_3	3.6	1.8		1.8	
				C	83.9	42.0			42.0
				X	0.2	0.1			0.1
Blast (dry) 2079 kg.				O	23.0	478.0		41.4	436.6
				N	77.0	1,601.0			1,601.0
Water, 31.7 kg.	In charge					10.0			10.0
	In blast					21.7			21.7
Totals						3,160.7	148.5	714.2	2,298.0

(*e*) Zn to ZnO.—Of the 29.5 kg. Zn furnished by 44 kg. ZnS, 13.0 kg. are oxidized. They require (Zn: O = 65:16 = 13.0:m). . . . . 3.2 kg. O.

(*f*) The total O theoretically required is, therefore, 41.7 + 127.8 + 112.0 + 3.2. . . . . 284.7 kg. O. and the accompanying N, 953, corresponding to 756.4 cu. m.

(*g*) The volume of gases is 127.8 kg. S + 127.8 kg. O = 255.6 kg. SO_2 = 88.7 cu. m.; 42.0 kg. C + 112.0 kg. O = 154 kg. CO_2 from coke, and 45.8 kg. CO_2

[1] The gas contains free O, hence no OC can form.

from limestone, or 199.8 kg. CO_2 = 101 cu. m. This gives as total volume 756.4 N + 88.7 SO_2 + 101.0 CO_2 = 946.1 cu. m. But the waste gas carries 8 vol. excess O, which corresponds to 40 vol. excess air. The above 946.1 cu. m. form, therefore, only 60 per cent of the true volume, which is 1,577 cu. m. at 0° C. and 760 mm. Hg.

(*h*) *Volume of Blast.*—The volume of O necessary to form CO_2 and SO_2 is 189.7 cu. m., that to form FeO and ZnO, 31.0 cu. m.; the accompanying N and excess air give 1,387.3 cu. m.; hence the volume of blast at 0° C. and 760 mm. Hg is 1,608.0 cu. m. = 2,079 kg.

(*i*) *Moisture in Charge and Blast.*—The charge has 1 per cent, or 10 kg., H_2O, the blast 13.5 g. per cubic meter, or 0.1608 × 13.5 = 21.7 kg., all of which passes off with the gases.

In casting the thermal balance for a charge of 1,000 kg. ore and flux, and 50 kg. coke, given in Table XLII, the incoming heat is placed in the debit column, the outgoing in that of the credit. The details of the calculation are as follows:

(1) Burning C to CO_2., 8,100 Cal. per kilogram C:

$$42 \times 8{,}100 = 340{,}200 \text{ Cal.}$$

(2) Burning S to SO_2, 2,164 Cal. per kilogram S:

(6.3 kg. S from ZnS) + (120.7 kg. S from Fe_7S_8) + (0.8 kg. S from coke) = 127.8 kg.

$$127.8 \times 2{,}164 = 276{,}560 \text{ Cal.}$$

TABLE XLII.—THERMAL BALANCE FOR ONE ORE CHARGE OF 1,000 KG.

Debit			Credit		
	Kilogram-calories	Per cent of total		Kilogram-calories	Per cent of total
(1) Burning C to CO_2	340,200	39.2	(9) Reduction of $CaCO_3$	46,991	5.4
(2) Burning S to SO_2	276,560	31.9	(10) Reduction of FeS	62,104	7.1
(3) Burning Fe to FeO	169,968	19.5	(11) Reduction of ZnS	8,600	1.0
(4) Burning Zn to ZnO	16,965	2.0	(12) Heat in matte	33,413	3.9
(5) Formation of $2FeO{\cdot}SiO_2$	31,816	3.6	(13) Heat in slag	232,115	26.7
(6) Formation of $CaO{\cdot}SiO_2$	18,554	2.1	(14) Heat in gas	354,633	40.8
(7) Sensible heat in charge	5,250	0.6	(15) Radiation and conduction (by difference)	131,201	15.1
(8) Sensible heat in blast	9,744	1.1			
	869,057	100.0		869,057	100.0

(3) Burning Fe to FeO, 1,173 Cal. per kilogram Fe:

The 144.9 kg. Fe from Fe_7S_8 entering the slag are oxidized to FeO.

$$144.9 \times 1{,}173 = 169{,}968 \text{ Cal.}$$

(4) Burning Zn to ZnO, 1,305 Cal. per kilogram Zn:

The 13.0 kg. Zn not entering matte and slag as ZnS are oxidized to ZnO.

$$13.0 \times 1{,}305 = 16{,}965 \text{ Cal.}$$

(5) Formation of $2FeO{\cdot}SiO_2$, 154 Cal. per kilogram FeO:

The 33.9 kg. Al_2O_3 in $(AlFe)_2Si_4O_{16}$ are assumed to enter the slag as $Al_2O_3{\cdot}2SiO_2$. This silicate contains 39.9 kg. SiO_2, leaving 48.1 − 3.59 =

8.2 kg. SiO_2 which are assumed to be combined with FeO as $2FeO \cdot SiO_2$. The 8.2 kg. SiO_2 require 19.7 kg. FeO, leaving 40.0 − 19.7 = 20.3 kg. FeO uncombined with SiO_2. The 144.9 kg. Fe from (3) correspond to 186.3 kg. FeO; the total FeO = 20.3 + 186.3 = 206.6 kg. = 154 × 206.6 = 31,816 cal.

(6) Formation of $CaO \cdot SiO_2$, 318.8 Cal. per kilogram CaO:
The 104.0 kg. $CaCO_3$ furnish 58.2 kg. CaO.

$$58.2 \times 318.8 = 18{,}554 \text{ Cal.}$$

(7) Sensible heat in charge at 20° C., spec. heat = 0.25 approx.

$$1{,}050 \times 0.25 \times 20 = 5{,}250 \text{ Cal.}$$

(8) Sensible heat in blast at 20° C., spec. heat = 0.303 approx., volume of blast = 1,608 cu. m.

$$1{,}068 \times 0.303 \times 20 = 9{,}744 \text{ Cal.}$$

(9) Dissociation of $CaCO_3$, 1,026 Cal. per kilogram CO_2.

$$45.8 \times 1{,}026 = 46{,}991 \text{ Cal.}$$

(10) Dissociation of Fe_7S_8, 428.6 Cal. per kilogram Fe:
The Fe entering the slag from Fe_7S_8 has to be set free before it is oxidized.

$$144.9 \times 428.6 = 62{,}104 \text{ Cal.}$$

(11) Dissociation of ZnS, 661.5 Cal. per kilogram Zn:
The Zn entering the gas from ZnS has to be set free before it is oxidized.

$$13.0 \times 661.5 = 8{,}600 \text{ Cal.}$$

(12) Heat in matte, 225 Cal. per kilogram approx.:

$$148.5 \times 225 = 33{,}413 \text{ Cal.}$$

(13) Heat in slag, 325 Cal. per kilogram approx.:

$$714.2 \times 325 = 232{,}115 \text{ Cal.}$$

(14) Heat in gas, temperature 600° C.:
Gas analysis = SO_2 5.4, CO_2 6.3, O 8.0, N 80.3 per cent vol. Volume of gas, at 0° C. and 760 mm. Hg, 1,577, cu. m. divides as follows: SO_2 = 1,577 × 0.054 = 85.2 cu. m.; CO_2 = 1,577 × 0.063 = 99.4 cu. m.; N and O = 1,577 × 0.883 = 1,392.4 cu. m. The mean spec. heats between zero and 600° C. are SO_2, 0.54; CO_2, 0.502; O and N, 0.3192, hence the total heat in the gases (85.2 × 0.54 + 99.4 × 0.502 + 1,392.4 × 0.3192) × 600 = 324,217 Cal.

There has to be added the heat contained in 31.7 kg. H_2O and 13.0 kg. ZnO. The heat of evaporation of H_2O at 0° C. = 606.5 Cal. per kilogram, hence 31.7 × 606.5 = 19,226 Cal.; the mean spec. heat of the gas between zero and 600° C. = 0.531, hence 31.7 × 0.531 × 600 = 10,098 Cal., or the total heat in the water vapor = 19,226 + 10,098 = 29,324 Cal. The mean spec. heat of ZnO between zero and 600° C. = 0.14, hence 13.0 × 0.14 × 600 = 1,092 Cal. The total heat in the gas is, therefore, 324,217 + 29,324 + 1,092 = 354,633 Cal.

2. *Partial Pyritic Matte Concentration.*—The mode of procedure in calculating a thermal balance was exactly the same as the one followed in the first case with ore smelting. The calculation is based upon the concentration of 1,000 kg. matte (Cu 16.0, Fe 49.8, Zn 2.1, S 24.9, undet. 7.2 per cent) with 293 kg. quartz and 50 kg. coke to converter matte containing Cu 51.1, Fe 22.2, S 23.3 SiO_2 0.21, Zn 0.8, undet. 2.5 per cent. Table XLIII gives the theoretical balance sheet of materials of one charge of 1,000 kg. matte, and Table XLIV the thermal balance sheet.

TABLE XLIII.—THEORETICAL BALANCE SHEET OF MATERIALS OF ORE CHARGE OF 1,000 KG.

Debit			Credit		
	Per cent	Weight, kilograms	Matte, kilograms	Slag, kilograms	Gas, kilograms
Matte, 1,000 kg.:					
Cu	16.0	160.0	160.0		
Fe	49.8	498.0	69.5	428.5	
Zn	2.1	21.0	2.5	9.2	9.3
S	24.9	249.0	73.6	4.6	170.8
X	7.2	72.0	.....	72.0	
Quartz, 293 kg.:					
SiO_2	100.0	293.0	.....	293.0	
Coke, 50 kg.:					
C	83.9	41.9	.....	.....	41.9
Fe	2.3	1.2	.....	1.2	
S	1.6	0.8	.....	.....	0.8
SiO_2	8.4	4.2	.....	4.2	
X	3.8	1.9	.....	.....	1.9
Blast, 2,874 kg.:					
N	77.0	2,213.0	.....	.....	2,213.0
O	23.0	661.0	.....	122.8	538.2
Moisture, 40 kg.:					
In matte	.....	10.0			
In blast	.....	30.0			
Total	.....	4,257.0	305 6	935.5	3,015.9

TABLE XLIV.—THERMAL BALANCE FOR ONE CHARGE OF 1,000 KG. MATTE

Debit			Credit		
Item	Kilogram-calories	Per cent of total	Item	Kilogram-calories	Per cent of total
Burning C to CO_2	339,390	26.2	Dissociation, FeS	183,655	14.2
Burning S to SO_2	371,342	28.8	Dissociation, ZnS	6,152	0.5
Burning Fe to FeO	504,038	38.9	Heat in matte	68,760	5.3
Burning Zn to ZnO	12,137	0.9	Heat in slag	304,038	23.5
Formation of slag	44,075	3.4	Heat in gas	471,418	36.4
Heat in charge	6,715	0.5	Radiation, conduction (diff.)	261,090	20.1
Heat in blast	17,416	1.3			
	1,295,113	100.0		1,295,113	100.0

3. *Partial Pyritic Ore Smelting at Washoe Smeltery, Anaconda Copper Mining Co.*—The thermal balance sheet given in Table XLV is one figured to a basis of 1,000-kg. charge from the official sheet furnished by E. P. Mathewson.

TABLE XLV.—THERMAL BALANCE SHEET FOR ONE ORE CHARGE OF 1,000 KG., ANACONDA, MONT.

Debit			Credit		
Item	Kilogram-calories	Per cent of total	Item	Kilogram-calories	Per cent of total
Burning coke	569,948	64.5	Dissociation, $CaCO_3$	121,710	13.8
Burning S	138,952	15.7	Dissociation, FeS	7,086	0.8
Burning Fe	80,461	9.1	Dissociation, $MgCO_3$	3,804	0.4
Burning Zn	8,881	1.0	Heat in gases	459,953	52.0
Formation of slag	77,158	8.7	Heat in flue dust	13,449	1.5
Brought in by blast	8,599	1.0	Heat in matte	30,311	3.4
			Heat in slag	200,773	22.7
	883,999	100.0	Heat in cooling water	14,576	1.7
			Loss by radiation (diff.)	32,337	3.7
				883,999	100.0

One striking feature of the two theoretical balance sheets of materials, given in Tables XLI and XLIII, is that the weight of the gases produced greatly exceeds that of the charge fed.

Of the three thermal balances, the data of Ducktown, Tables XLII and XLIV, show that more heat is derived here from oxidation of Fe and S than at Anaconda (Table XLV), also that their losses of heat by radiation and conduction are very much larger. The three thermal tables show that the largest part of the heat generated in the furnace is carried off by the gases, and that the slag follows next in order.

97. **General Smelting Operations.**—These are the blowing-in, the regular work on the feed and furnace floors, and the blowing-out.

In starting, it is advisable to make up a charge which will run easily and furnish a matte with Cu 30 to 35 per cent, as this runs hot and heats up the crucible and the fore hearth. When the furnace runs well on a slag that is easily formed and on a high percentage of coke, the change is made to the kind of charge it is the intention to run, be the process reducing, pyritic, or partial pyritic smelting. The following gives in detail two modern examples of blowing-in furnaces in partial pyritic smelting.

At the smelter of the Tennessee Copper Co., George A. Guess[1] used to proceed as follows: A new crucible is warmed for 24 hr. by burning wood. When warm, it is cleaned out, and light wood (scrap boards, broken lumber) charged to reach to the tuyères. With an old furnace the bottom is only 6 to 8 in. below the tuyères, hence much less wood is required than when the crucible is new. The wood is ignited from end to end with oil-soaked waste; no blast is used; the necessary air enters through the tuyère openings. When the wood burns freely, more is charged to reach well above the tuyères; care is taken that the wood lie flat, *i.e.*, that there shall be no pieces of cord wood pointing upward.

[1] Private communication, Aug., 1912.

If the wood is dry, no blast is needed, but if wet, some air is turned on which is made to enter through alternate tuyères. As soon as the bed of wood is burning freely all over, coke is charged, about 40 lb. per square foot of hearth area. Some blast is now necessary; as soon as the coke appears to be well ignited all over, the plugged tuyères are uncovered, and air with a pressure of about 2 oz. turned on. The breast of the furnace has not been closed; an open breast assists in blowing out ashes, etc.

When the coke is red on top, the furnace receives its charges in quick succession. The blowing-in charges, six in number, differ from the normal, in that they are made less siliceous and carry 50 per cent more coke. As soon as the first charge has been fed, the blast pressure is raised to about 8 oz. Bits of charcoal, coke, etc. are blown with the flame out of the breast, and the bottom is cleaned and heated. This continues until fluid slag with some matte has trapped the blast, which happens in from 30 to 40 min. after the first blowing-in charge has been given. Matte and slag now overflow into the preheated settler; the blast is gradually increased until, in about 10 hr. after the first blowing-in charge, full blast has been put on.

It will be noticed that no slag is used in blowing-in an ore furnace; with a matte-concentrating furnace some slag is used at first, although it is not absolutely necessary.

At the Garfield smelter A. E. Wells[1] used the following procedure: The bottom of the crucible is lined with about 12 in. of silica well tamped down. In order to dry it, a slow wood fire is kept going for 18 hr., and then a brisk fire 6 hr. A new settler is dried and warmed with a wood fire for 48 hr. When crucible and settler are warm, the furnace is filled with scrap wood to reach about 2 ft. above the tuyères, the wood is kindled and the furnace filled; the wood burns with natural draft while the blowing-in charges are dropped. On top of the wood are spread 6,000 lb. coke followed by nine blowing-in charges of 6,000 lb., consisting of sulphide ore (> ¾ in.) 2,000 lb., converter slag (fist-size) 3,000 lb., limestone 1,000 lb., coke 600 lb. The blowing-in charges make a matte with Cu 25 per cent and a slag with SiO_2 36, FeO 45. CaO 14 per cent. As soon as the blowing-in charges have been fed, blast is put on (15,000 cu. ft. per minute, engine displacement), which gives at the tuyères a pressure of 20 to 25 oz. A flame is allowed to escape for a few minutes through the connecting hole in the breast block to blow out half-burnt wood and coke which might obstruct the passage of the slag. When slag begins to collect around the connection hole, this is loosely plugged with a clayey brasque, and a 2-in. bar pushed through the latter. In about 15 min. the slag has risen sufficiently to trap the blast, the bar is pulled out, and the slag matte allowed to overflow into the settler. The blowing-in charges are gradually replaced by ore charges; one of the former is followed by two of the latter; and the furnace is run for 2 hr. on this mixture. The charge column is now raised to its normal height, and the blast is increased to 21,000 cu. ft. air per minute, which raises the pressure to about 35 oz. The regular work of the furnace is given in Table XXX.

[1] Private communication, Aug., 1912.

The operations such as feeding of charge (§73), tapping of matte, and handling of slag (§74) have already been discussed. The work on the feed floor and furnace floor has been indicated in §§73 and 74. In blowing-out, slag charges are substituted for ore charges until most of the ore charge has been smelted. Charging is stopped, the charge slowly sinks, and the volume of blast admitted is lowered. When the charge has sunk to about the lower tier of jackets, the blast is stopped, the tuyère valves are closed, the furnace is tapped clean, the breast jacket is removed, and the material remaining in the furnace raked out. When the flow of slag ceases, the contents of the fore hearth are tapped.

98. Adding Fuel through the Tuyères.—Various attempts have been made to replace part of the coke charge with powdered coal introduced through the tuyères, but in most cases they have been abandoned although promising interesting results. One reason for abandoning them is the lack of a suitable method for introducing the coal. All leaks of air around the furnace shower the workmen with the black powder and raise serious objection on their part. A. L. Walker[1] reports comparative results on two similar furnaces, one of which used some powdered coal. These are given in Table XLVI.

TABLE XLVI.—COMPARISON OF SMELTING WITH COKE ALONE AND COKE-COAL MIXTURE

	Coal and coke	Coke only
Ore, tons	2,802	3,023
Charge, tons	3,013	3,188
Coke, tons	225	411
Coal, tons	192	
Total fuel, tons	417 = 13.8 per cent	411 = 12.9 per cent
Fuel cost	$4 869	$6.370
Fuel cost per ton ore	1.74	2.11

Cost of grinding and extra labor 7 cts. per ton ore.

At Garfield, Utah, and Copper Cliff, Ont., furnaces were operated for a short time successfully with powdered coal and satisfactory results have been obtained at Cerro de Pasco, Peru.

At Kosaka, Japan,[2] coal is introduced at the tuyères in lump form with encouraging results. The furnace is 24.5 by 4 ft. at the tuyères and operates with an ore column of only 9.0 ft. above the tuyères. The tuyères used are round and 6 in. in diameter. The coal, crushed to about nut size, is put in a metal tube 2 ft. long and 3½ ft. in diameter, holding about 3 lb. The pipe is inserted by hand in the tuyère and the coal forced in by a plunger. One feeder tends eight tuyères and feeds about 2,500 lb. coal per 8 hr. The total coal used in this way amounts to about 4 per cent of the charge.

The tuyère equipment for using powdered coal by the Garred system is shown in Figs. 99 and 100.

[1] *Eng. Mining J.*, 1920, CIX, 190.

[2] *Trans. A. I. M. E.*, 1923.

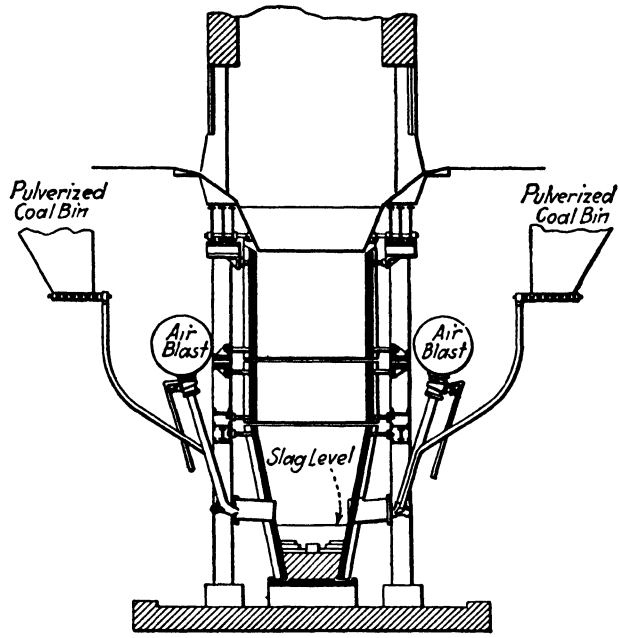

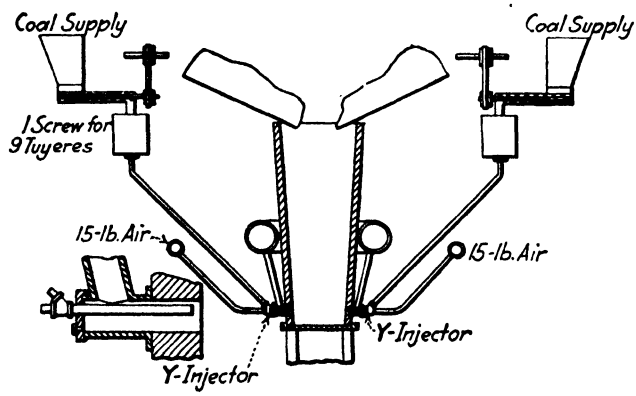

FIGS. 99–100.—Equipment for feeding pulverized coal into blast furnace tuyères.

PRODUCTS

99. Products of the Blast Furnace.—The regular products are matte, speise, flue dust, and gases; the irregular products, wall accretions, hearth accretions, furnace drawings, and refuse.

100. Matte.[1]—In Table XLVII are given analyses of mattes with increasing contents of Cu selected from a collection published by Keller.[2] The leading constituents of this intermediary product are Cu, Fe, and S; the other components, such as Ni, Co, Zn, Pb, Bi, Sb, As, Se, Te, Ag, Au, etc., are of minor import. There will be considered the relations of Cu-Fe, Cu-Cu_2S, Fe-FeS, and Cu_2S-FeS.

The metals Cu and Fe (page 20) form solid solutions within a range of 96.5 per cent Fe + 3.5 per cent Cu and 97 per cent Cu + 3 per cent Fe.

TABLE XLVII.—ANALYSES OF COPPER MATTES

Source	Cu per cent	S per cent	Fe per cent	Fe_3O_4 per cent	Ni per cent	Co per cent	Zn per cent	Pb per cent
Elizabeth M. Co., Vt.	21.36	22.95	41.03	10.44	0.0020	0.1984	0.24	0.0226
Parrot, reverberatory furnace	36.15	23.88	24.97	8.51				
Le Roi Mine, B. C.	49.02	22.78	23.86	. .	0.0383	0.0332	0.09	0.0920
Ducktown, Tenn.	49.17	19.45	22.79	. .	0.0436	0.0222	0.77	0.1294
B. & M. Co., reverberatory furnace	49.34	. . .	22.44	. . .	. . .	. . .	. . .	0.0738
Jerome, Ariz.	55.00	23.96	13.85	2.58	. . . . .	. . . .	1.24	3.0250
Silver City, N. M.	53.73	23.17	19.49	. . . . .	0.0354	0.0498	0.26	0.0022
Copper Queen, blast furnace.	54.89	23.36	20.25	. . . . .	0.0341	0.0240	0.34	0.1178
Mountain Copper Co., Cal.	57.83	22.47	15.28	. . . . .	0.0050		2.09	0.0719
Anaconda, reverberatory furnace	60.76	23.25	11.43	1.13	0.0076	0.0034	2.41	0.5900
B. & M. Co., blast furnace	61.42	. . .	14.50	. . . .	. . . . .	. . . . .	. . . . .	0.0370
Santa Rosalia, Mexico	61.52	22.52	13.68	.	0.0645	0.4140	0.2333	0.0270

TABLE XLVII.—ANALYSES OF COPPER MATTES (*Continued*)

Source	Bi per cent	Sb per cent	As per cent	Te per cent	Se per cent	Ag oz. per ton	Au oz. per ton
Elizabeth M. Co. Vt.	0.0	0.0	0.0041	0.0	0.0082	2.4	0.0
Parrot, reverberatory furnace							
Le Roi Mine, B. C.	0.0008	0.0348	0.0434	0.0063	0.0	26.0	10.72
Ducktown, Tenn.	0.0	0.0206	0.0	0.0	0.0	5.9	0.04
B. & M. Co., reverberatory furnace	0.0337	0.1010	0.0480	0.0021		14.6	0.05
Jerome, Ariz.	0.0174	0.2693	0.0914	0.0474	0.1172	127.0	2.28
Silver City, N. M.	0.0	0.0032	0.0	Trace		1.2	Trace
Copper Queen, blast furnace	0.0044	0.0232	0.0171	0.0088	0.0113	6.0	0.10
Mountain Copper Co., Cal.	0.0014	0.0143	0.0130	0.0060		13.4	0.51
Anaconda, reverberatory furnace	0.0420	0.0790	0.0450	0.0112	0.0038	60.4	0.30
B. & M. Co., blast furnace	0.0049	0.1330	0.1280	0.0042		18.2	0.05
Santa Rosalia, Mexico	0.0008	0.0032	0.0013	0.0	0.0	2.2	Trace

The saturation point of Cu_2S for Cu (page 24) is 15 per cent; and the eutectic Cu-Cu_2S contains 3.8 per cent Cu_2S + 96.2 per cent Cu.

The freezing-point curve for FeS-Fe has been investigated by Tammann and Treitschke[3] and Friedrich.[4] According to the diagram of Friedrich (Fig. 101),

[1] In England the word "regulus" is used synonymously.

[2] *Mineral Ind.*, 1900, IX, 243; see also Channing in RICKARD's "Pyrite Smelting," p. 263.

[3] *Z. anorg. Chem.*, 1906, XLIX, 320; *Metallurgie*, 1907, IV, 54.

[4] *Metallurgie*, 1910, VII, 257.

the two components form an eutectic mixture of 15 per cent Fe and 85 per cent FeS, solidifying at 983° C.; Fe can hold in solid solution less than 3 per cent FeS and FeS less than 1 per cent Fe.

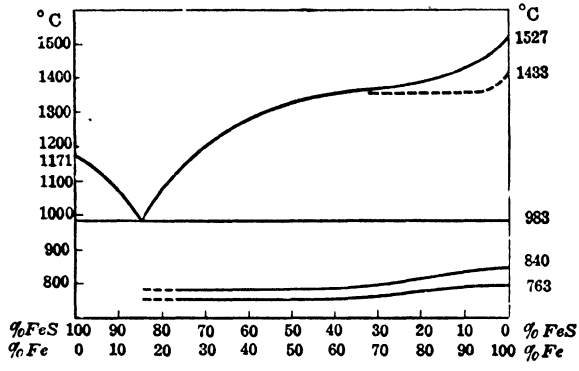

FIG. 101.—Alloy series FeS-Fe.

The constitution of Cu_2S-FeS has been traced through freezing-point curves by Röntgen,[1] Hofman, Caypless and Harrington,[2] Baykoff and Troutneff,[3] and

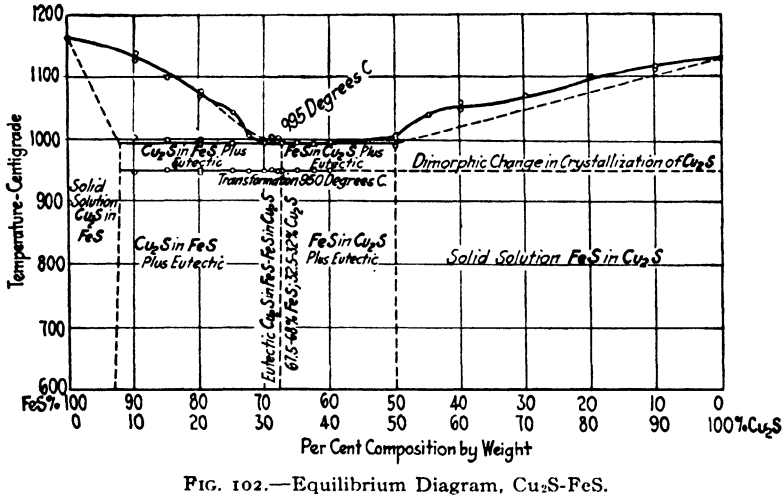

FIG. 102.—Equilibrium Diagram, Cu_2S-FeS.

Bornemann and Schreyer,[4] and through other methods by Münster,[5] Bolles,[6] Gibb and Philp,[7] and Fulton and Goodner.[8] An eutectic mixture found by

[1] *Metallurgie*, 1906, III, 479.
[2] *Trans. A. I. M. E.*, 1908, XXXVIII, 424.
[3] *Rev. métal.*, 1909, VI, 518.
[4] *Metallurgie*, 1909, VI, 619.
[5] *Berg. Hüttenm. Z.*, 1877, XXXVI, 195, 210, 219.
[6] *Trans. A. I. M. E.*, 1905, XXXV, 666.
[7] *Op. cit.*, 1906, XXXVI, 665.
[8] *Op. cit.*, 1908, XXXIX, 584.

some is denied by others, although it can be seen clearly in copper matte; similar disagreements exist as regards chemical compounds and solid solutions. The latest investigation is by Carpenter and Hayward,[1] whose curve is reproduced in Fig. 102. They find a eutectic range extending from FeS 92.5 per cent to FeS 50 per cent. The free copper often found in mattes is attributed to the distillation of S from FeS; the resulting Fe reacting with Cu_2S to form Cu.

In plotting the accepted relations between Cu, Fe, and S in a triaxial diagram, as was done by Baikoff and Troutneff,[2] but substituting the data of Friedrich for those of Tammann and Treitschke, Fig. 103 is obtained. This gives four fields: Field I represents the areas of S-Fe and S-Cu compounds which are dissociated above their melting points; field II, the stable FeS-Cu_2S mixtures forming pure matte; field III, the region in which there is in the liquid state a stratification of components belonging to II and IV; field IV, a matte with large amounts of solid solution of Cu and Fe. The connecting lines are drawn straight, because there are as yet no data to show their accurate positions between the end points. The smallness of field II shows how likely ordinary mattes are to contain metallics in which either Fe or Cu prevails.

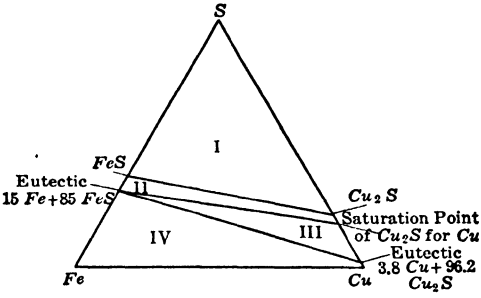

FIG. 103.—Triaxial diagram of copper-iron matte.

The presence of Fe_3O_4 to an extent of 10 per cent in low-grade, and especially in pyritic, matte,[3] which causes much trouble in the settler, is due to Fe_3O_4 in the charge, or to imperfect reduction of Fe_2O_3; it may be caused also by oxidation of the Fe in the matte, but not by that of FeS, as in normal pyritic operation this is presupposed to be oxidized to FeO and directly combined with SiO_2. In abnormal pyritic work, however, it may be formed, if, *e.g.*, there is a lack of SiO_2.[4] As Fe_3O_4, with a specific gravity of 5.0 to 5.2, forms more readily with a low- than a high-grade matte, and as the specific gravity of matte increases with the Cu content (Cu 13.62 per cent, spec. gr. 4.8; Cu 43.00, spec. gr. 5.18; Cu 60.22, spec. gr. 5.42; Cu 80.00, spec. gr. 5.55), Fe_3O_4 will enter low-grade matte and float on high-grade matte, and thence will be taken up in part by slag and carry Au into it. Thus at Blagodatny, Ural,[5] with a matte of SiO_2 1.2, Cu_2S 17.2, FeS 61.7, PbS 6.7, Fe_3O_4 12.4, As, Sb.Bi 0.6 per cent, Au 6.23 oz. and Ag 66.4 oz. per ton, the slag (SiO_2 45.2, FeO 28.5, CaO 22.2, N.D. 4.1) assayed

[1] *Eng. Mining J.-Press*, 1923, CXV, 1055.

[2] *Loc. cit.*

[3] KELLER, *Eng. Mining J.*, 1895, LX, 465; LARISON, *op. cit.*, 1909, LXXXVII, 1195; RIZO and PATRON, *op. cit.*, 1909, LXXXVIII, 367; SHELBY, *loc. cit.*, p. 742; KELLER, *Mineral Ind.*, 1900, IX, 243; GIBB and PHILP, *Trans. A. I. M. E.*, 1906, XXXVI, 671, 1907, XXXVIII, 913; KELLER, *op. cit.*, 1906, XXXVI, 837.

[4] See page 152.

[5] Private communication by F. W. Draper, Nov., 1908.

Au 0.03 oz. and Ag 0.59 oz. per ton, while in the absense of Fe_3O_4 the slag ran Au 0.003 to 0.013 oz. and Ag 0.50 to 0.75 oz. per ton. The silver content in the slag did not appear to be affected by Fe_3O_4; it varied directly with the assay of the matte, whether Fe_3O_4 was present or not.

Finely divided Cu,[1] so-called "moss-copper," is of frequent occurrence in matte assaying from about 30 to about 60 per cent Cu. Fulton and Goodner[2] noticed it in 10 per cent Cu matte. It has its origin in the insolubility of Cu in Cu_2S in the solid state (§21). Fulton and Goodner call attention to the fact that the Cu separates from solid matte when this is relatively cool, but still too hot to be held in the hand. They attribute the separation at this low temperature tentatively to the dimorphic point of Cu_2S, which occurs at 103° C. The cracking vertically of conical or hemispherical cakes of Cu matte[3] upon cooling, if the Cu content is much below 50 per cent, and horizontally if over 50 per cent, may be due in part to the separation of Cu (see also Ni-Cu matte).[4] The large needles of Cu found in some mattes, not to be confounded with moss copper, are due to the reaction of Cu_2S upon CuO or Cu_2O.[5] Carpenter and Hayward[6] explain the formation of metallic copper by the fact that there is a gradual distillation of sulphur from matte held at temperatures above the melting point. The resulting deficiency in sulphur results in the precipitation of copper.

Matte is an excellent carrier of precious metals.[7] The leading reasons for this are that Cu_2S and Ag_2S form solid solutions,[8] the curve showing a maximum depression at 677° C.; that Cu_2S readily dissolves Au; that Cu easily alloys both with Ag (page 25) and Au (page 26); that Fe is a strong solvent for Au;[9] and that the same is the case[10] for Au_2S_3 in the presence of Ag_2S. Little if any solvent action has been noticed with FeS for either Ag_2S[11] or Au_2S_3;[12] and Fe has little affinity for Ag.[13] The equilibrium diagram for Ag_2S-FeS by Schoen[14] shows an eutectic with 11 per cent FeS freezing at 600° C., and a transformation at 175° C. characteristic for Ag_2S. The presence of PbS and ZnS in matte will not

[1] PLATTNER, *Berg. Hüttenm. Z.*, 1855, XIV, 143; HAMPE, *op. cit.*, 1893, LII, 448; PALMER, *Mining Sci. Press*, 1906, XCIII, 604; GIBB and PHILP, *Trans. A. I. M. E.*, 1906, XXXVI, 677; LARISON, *Mining World*, 1907, XXVII, 550.

[2] *Trans. A. I. M. E.*, 1908, XXXIX, 617.

[3] BELLINGER, *Mineral Ind.*, 1894, III, 229.

[4] BROWNE, *School Mines Quart.*, 1894–95, XVI, 297.

[5] MÜNSTER, *Berg. Hüttenm. Z.*, 1877, XXXVI, 220.

[6] *Eng. Mining J.-Press*, 1923, CXV, 1055.

[7] BOLLES, *Trans. A. I. M. E.*, 1905, XXXV, 666; FULTON and GOODNER, *op. cit.*, 1908, XXXIX, 584.

[8] FRIEDRICH, *Metallurgie*, 1907, IV, 671.

[9] *Trans. A. I. M. E.*, 1886–87, XV, 767 (SPILSBURY); 1889–90, XVIII, 454, 457 (PEARCE); 1900, XXX, 769 (CARPENTER); 1905, XXXV, 666 (BOLLES); *Z. angew. Chem.*, 1907, LIII, 291; *Rev. métal.*, 1908, V, 188; *Metallurgie*, 1907, IV, 469 (Isaac and Tammann's solid-solution curve).

[10] MUIR, *Eng. Mining J.*, 1872, XIV, 56; PEARCE, *loc. cit.*

[11] KARSTEN, C. J. B., "System der Metallurgie," Reimer, Berlin, 1832, V, 525.

[12] SPILSBURY, *loc. cit.*

[13] SPILSBURY-PIERCE-BOLLES, *loc. cit.*

[14] *Metallurgie*, 1911, VIII, 737.

materially assist the collection of Ag_2S, provided Cu_2S is present, as both form eutectiferous alloys[1] in which the eutectic line extends to near the ordinates. In a copper matte Cu_2S is, therefore, the leading carrier of precious metals. The question is, how much Cu must be present to effect a complete collection. The consensus of metallurgists seems to be[2] that 0.5 per cent Cu is sufficient, provided the degree of concentration is not too great. Carpenter[3] states that with little matte this should contain 10 per cent Cu, and that with much matte 2 to 3 per cent Cu would be ample. Lang[4] calls attention to the formation temperature of the slag produced in smelting; if this be high, the matte will contain some metallic Fe, and this is a good collector for Au.

101. Speise.—This is not often formed in the smelting of sulphide copper ores, as As and Sb are usually present in small amounts, and as most of the As_2S_3 and Sb_2S_3 is readily eliminated, either as oxide in the roasting which precedes a reducing fusion, or as sulphide in the pyritic smelting which treats raw ore. Sometimes speise is purposely produced in the treatment of ores containing Cu, Ni, As, and S in order to collect the Ni in the speise and the Cu in the matte; the speise, however, locks up considerable amounts of Cu. Some analyses of speise are given in Table XLVIII.

TABLE XLVIII.—ANALYSES OF COPPER SPEISE

Locality	Cu	Pb	Fe	Ni	Co	Zn	Sb	As	Ag	Au	S	Bi
Schmöellnitz[a]	12.99	0.09	12.63	1.40	0.09	....	60.00	7.42	0.36	0.06	2.04	1.26
Neusohl[a]	41.18	0.69	35.41	0.09	0.04	....	10.79	6.10	0.03	....	2.60	
Brixlegg[b]	51.73	35.20	1.65	0.13	0.24	1.82	3.34	2.75	0.175		1.38	1.63
Brixlegg[b]	25.85	16.68	22.17	1.60	1.11	3.31	13.50	11.04	0.085		4.13	
Pretoria[c]	52.50	0.25	3.60	....	....	....	38.00	2.00	1.59	....	2.06	
England[d]	7.78	2.94	10.20	6.57	....	....	41.82	18.56	0.02	2.60	1.72	

[a] BALLING, C. A. M., "Metallhüttenkunde," Springer, Berlin, 1885, p. 192; *Mining Eng. World*, 1913, XXXVIII, 9.

[b] KROUPA, *Oesterr. Z. Berg. Hüttenw.*, 1906, LIV, 73, 84.

[c] BETTEL, *Eng. Mining J.*, 1891, LII, 74.

[d] MCMURTRY, *Trans. Inst. Min. Met.*, 1913, XXII, 50.

The treatment of speise consisted usually in a series of oxidizing roasts followed by reducing fusions, by means of which Ni with its great affinity for As is more and more concentrated, forming a nickel speise. More recently roast smelting in the reverberatory furnace has become the favored method at Freiberg,[5] Oker,[6] and Brixlegg.[7] The experimental results have been most satis-

[1] FRIEDRICH, *Metallurgie*, 1907, IV, 671, and 1908, V, 114.

[2] RICKARD, "Pyrite Smelting," p. 134.

[3] *Op. cit.*, p. 34.

[4] *Op. cit.*, p. 37.

[5] HÜBNER, *Glückauf.*, 1905, XLI, 6; HOFMAN, *Mineral Ind.*, 1905, XIV, 414.

[6] HUHN, *Glückauf.*, 1905, XLI, 1145; *Mining Mag.*, 1906, XIII, 312; *Mineral Ind.*, 1905, XIV, 414 (HOFMAN); 1906, XV, 286 (AUSTIN).

[7] KROUPA, *Oesterr. Z. Berg. Hüttenw.*, 1906, LIV, 73, 84; AUSTIN, *Mineral Ind.*, 1906, XV, 286.

factory. Converting speise with an addition of about 50 per cent copper matte in a basic converter has been successful, while converting speise alone has not. The electronegative component of speise usually is As. In the analyses of Table XLVIII, Sb prevails over As. There is an interesting record by Bettel[1]

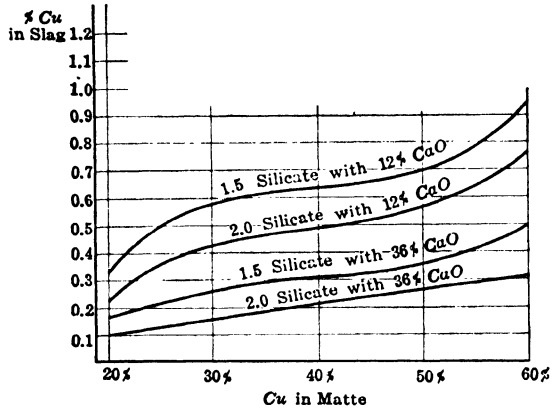

FIG. 104.—Relation of copper-content in slag to that in matte.

of the collection of Cu and Ag in an antimonial speise, by smelting in a reverberatory furnace; the analysis is given in Table XLVIII; another record is that of McMurtry.[2]

102. Slag.—Compositions and Cu contents of some blast-furnace slags are given in Tables XXX and XXXI.

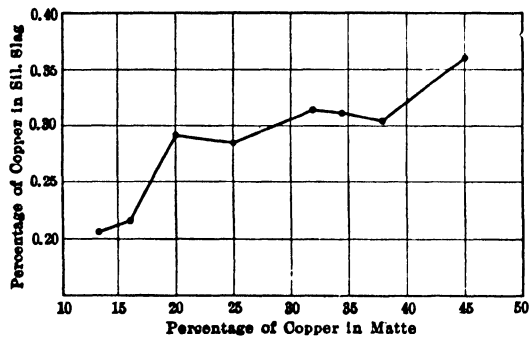

FIG. 105.—Relation of copper-content in slag and matte.

About thirty years ago, foul slag from a matte concentrating blast furnace[3] of the Orford Copper Co. was partly freed from Cu by running it from the fore hearth direct into one end of the ore furnace a slight distance above the level of

[1] *Eng. Mining J.*, 1891, LII, 74.
[2] *Trans. Inst. Min. Met.*, 1913, XXII, 50; *Mining Eng. World*, 1913, XXXVIII, 9.
[3] EUSTIS, W. E. C., Private Communication, Apr., 1894.

the tuyères. This worked satisfactorily, as long as the ore furnace ran smoothly, without any obstructions forming to check the inflow of the slag. With ordinary care this could be avoided, but when accidents did occur, there was no end of trouble; hence, the method has been abandoned.

The Cu losses[1] are caused by imperfect settling of matte (due to lack of time and temperature, insufficient difference in specific gravity, gas flotation, mushiness of matte, viscosity of slag), by solution of metal, oxide or sulphide in slag, and by scorification of copper (silicate, perhaps ferrite). The second cause was

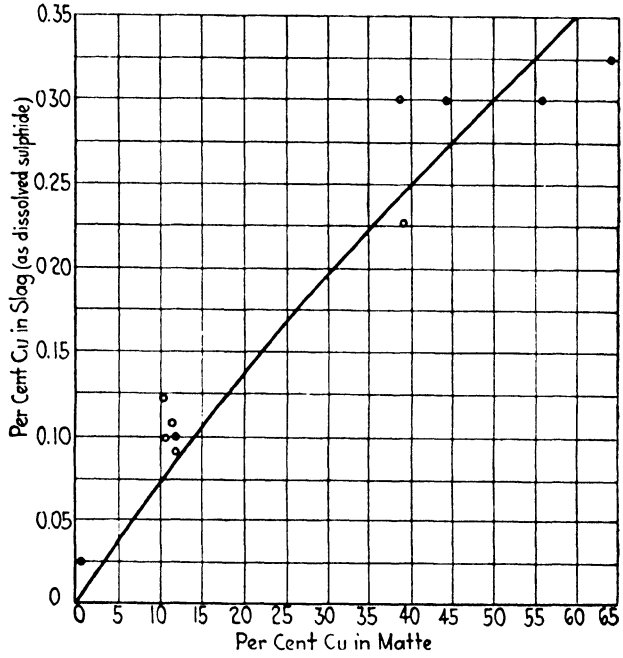

FIG. 106.—Copper losses in slags at Trail, B. C.

once thought to be so insignificant that it could be neglected. The experiments of Wanjukow[2] prove that this factor has to be considered. The curves (Fig. 104), representing sesqui- and bisilicates with 12 and 36 per cent CaO show how, with as high a ratio of matte to slag as 2:5, the Cu content of the slag increases with that of the matte. Wright finds that the Cu content of slag increases with that of the matte produced, as shown in Fig. 105. Stedman[3] in discussing the

[1] HEYWOOD, *Eng. Mining J.*, 1904, LXXVII, 395; WRIGHT, *Trans. A. I. M. E.*, 1909, XL, 492; 1910, XLI, 316; CHANNING, *op. cit.*, 1910, XLI, 885; *Mining Sci. Press*, 1909, XCIX, 668; PALMER, *Eng. Mining J.*, 1905, LXXIX, 1223; *Ann. chim. anal.*, 1905, X, 193; HEBERLEIN, *Eng. Mining J.*, 1910, LXXXIX, 617; GABRILL, *op. cit.*, 1910, LXXXIX, 776; SCHERTEL, L., Thesis, Freiberg, 1910.

[2] *Metallurgie*, 1912, IX, 624.

[3] *Eng. Mining J.-Press*, 1922, CXIV, 1023.

losses of copper in blast-furnace slags gives a curve, reproduced in Fig. 106, obtained by plotting a large number of analyses of blast-furnace slags produced at Trail, B. C. In some further experiments matte of varying copper content and slag were fused together in a clay crucible and maintained at a high temperature for 2 hr. This treatment was assumed to produce slag and matte in equilibrium. With final buttons of matte running 12.1, 45.1, 56.4 and 64.2 per cent Cu, the total Cu in the slags was, respectively, 0.21, 0.46, 0.45, and 0.51 per cent and the dissolved Cu 0.10, 0.30, 0.30, and 0.33 per cent.

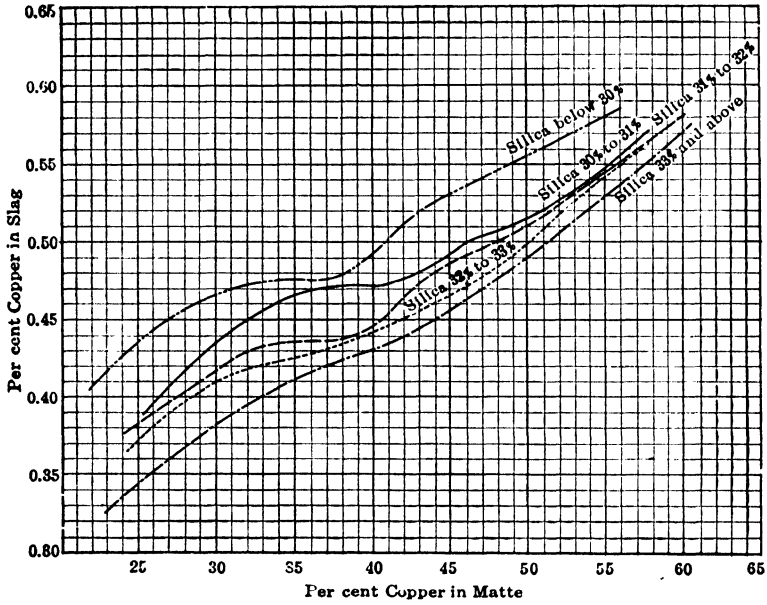

FIG. 107.—Relation of copper-content in slag to SiO_2- and Fe(Mn)O-content.

Heywood (Fig. 107), states that slags rich in iron and manganese carry more Cu than when rich in SiO_2. A relation between the percentage of SiO_2 and the Cu content has been noted in some cases; thus acid slags are to contain 0.5 per cent and basic slags 1 per cent of the Cu content of the matte. The present knowledge of the different factors is still too incomplete to permit application of laws of physical chemistry for drawing general conclusions which might assist in explaining satisfactorily individual cases. The Ag content of slags appears to run parallel with that of Cu; that of Au shows no recognized regularity. Waste blast-furnace slag with 40 to 45 per cent copper matte contains from 0.2 to 0.5 per cent Cu.

Maier and Van Arsdale[1] have studied copper slags chemically and microscopically and have determined that the copper exists in two forms, *viz.*, as dissolved copper sulphide and as mechanically suspended particles of matte.

[1] *Chem. Met. Eng.* 1920, XXII, 48; *Eng. Mining J.*, 1919, CVII, 815.

The latter are not only due to poor settling conditions but also to the floating action of gas bubbles attached to the matte particles. These gas bubbles are probably caused by a reaction between ferric oxide and the matte. Some of their results are shown by curves in Figs. 108 and 109 and by Table XLIX.

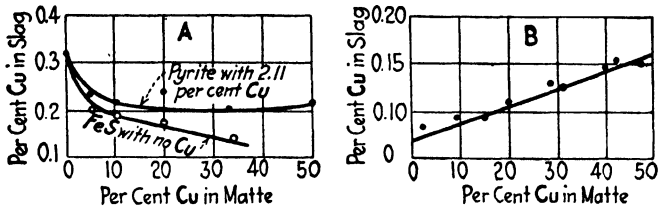

FIGS. 108–109.—Copper losses in slags (Maier and Van Arsdale).

Table L gives the form in which copper existed in various samples of slag from blast furnaces, reverberatories, and converters at various plants as given by Lathe.[1]

TABLE XLIX.—COMPARISONS OF CHEMICAL ANALYSES AND COPPER CONTENTS OF TYPICAL SLAGS

No.	Slag	Per cent Cu	Per cent dissolved Cu	Per cent pellet Cu	Per cent SiO_2	Per cent Al_2O_3	Per cent CaO	Per cent CaO + MgO	Per cent S	Per cent FeO
1	Copper Queen blast furnace	0.35	0.16	0.19	[a]36.0	[a]11.0	.....	[a]7.0	....	[a]38.0
2	Copper Queen reverberatory	0.28	0.22	0.06	40.76	11.43	4.88	7.61	0.41	37.56
3	Morenci blast furnace	0.30	0.15	0.15	[a]35.0	[a]10.0	.....	[a]18.0	....	[a]34.0
4	Old Dominion blast furnace	0.36	0.13	0.23	[a]37.0	[a]9.0	.....	[a]16.0	....	[a]34.0
5	United Verde Extension	0.34	0.19	0.15	43.86	5.55	12.81	13.53	0.37	34.32
6	Arizona Copper Co., No. 1	0.37	0.21	0.16	39.98	11.70	3.46	5.89	0.52	39.30
7	Arizona Copper Co., No. 2	0.40	0.20	0.20	38.80	11.38	3.07	5.31	0.40	42.35
8	Arizona Copper Co., No. 3	0.40	0.25	0.15	41.35	11.45	6.14	8.65	0.29	34.81
9	Arizona Copper Co., No. 4	0.32	0.24	0.08	41.69	11.71	6.03	8.33	0.25	36.36
10	Calumet and Arizona	0.23	0.18	0.05	42.70	6.56	6.52	8.19	0.73	39.96
11	El Paso, No. 1	0.46	0.25	0.21	41.04	5.88	5.68	7.39	0.40	42.87
12	El Paso, No. 2	0.38	0.25	0.13	41.75	6.44	5.16	6.41	0.58	44.31
13	A. S. & R., Hayden	0.34	0.11	0.23	37.22	6.78	15.02	16.63	0.47	38.27

[a] Estimated approximate average.

[1] *Eng. Mining J.-Press*, 1920, CX, 1076.

TABLE L.—COPPER IN SLAGS

(Blast Furnace Slags)

Sample	Company	Location	Nature of the charge	Copper, per cent	
				Total	Oxide
1	British America Nickel Corp.	Nickelton, Ont.	Heavy sulphide ore containing both nickel and copper.	0.05	0.015
2	Cananea Cons. Copper Co.	Cananea, Mex.	Little oxidized copper.	0.33	0.055
3	Cons. Mining & Smelting Co.	Trail, B. C.	Heavy sulphide ore.	0.255	0.030
4	Granby Cons. M. S. & P. Co.	Anyox, B. C.	Heavy sulphide ore.	0.145	0.025
5	Granby Cons. M. S. & P. Co.	Anyox, B. C.	Matte concentration.	0.295	0.015
6	Old Dominion Copper Co.	Globe, Ariz.	Some oxidized copper.	0.360	0.250
7	Phelps Dodge Corp.	Douglas, Ariz.	About 1 per cent copper in oxidized condition.	0.420	0.340
8	Tennessee Copper Co.	Ducktown, Tenn.	Heavy sulphide ore.	0.220	0.020
9	Tennessee Copper Co.	Ducktown, Tenn.	Matte concentration	0.440	0.150
	(Reverberatory Slags)				
10	Anaconda Copper Mining Co	Anaconda, Mont.		0.35	0.24
11	Anaconda Copper Mining Co.	Anaconda, Mont.		0.37	0.30
12	Anaconda Copper Mining Co.	Anaconda, Mont.	Converter slag furnace.	0.60	0.24
13	Cananea Cons. Copper Co.	Cananea, Mex.	Low-grade matte produced.	0.145	0.07
14	Phelps Dodge Corp.	Douglas, Ariz.		0.29	0.24
	(Converter Slags)				
15	Anaconda Copper Mining Co.	Anaconda, Mont.		4.88	3.85
16	British America Nickel Corp.	Nickelton, Ont.	Beginning of blow, nickel present.	1.23	0.06
17	British American Nickel Corp.	Nickelton, Ont.	Middle of blow, nickel present.	1.46	0.10
18	British America Nickel Corp.	Nickelton, Ont.	End of blow Ni + Cu, 70–80 per cent.	0.845	0.25
19	Cananea Copper Co.	Cananea, Mex.		1.54	0.56
20	Cons. M. & S. Co.	Trail, B. C.		1.97	0.88
21	Granby Cons. M. S. & P. Co.	Anyox, B. C.		2.56	1.04
22	Old Dominion Copper Co.	Globe, Ariz.		3.61	2.40
23	Phelps Dodge Corp.	Douglas, Ariz.		3.53	2.21
24	Tennessee Copper Co.	Ducktown, Tenn.		1.00	0.77

103. Gases and Flue Dust.—The average temperature of the waste gases at the open throat of a copper blast furnace is low, in a reducing fusion (150° C.), in true pyritic smelting (250° C.). It is high in partial pyritic smelting (over 300° C). Their velocity is also high on account of the small difference between tuyère and throat areas, an average figure being about 750 ft. per minute.[1] Though the temperature of the gases may drop to 100° C. when a new charge has been fed, it will rise in partial pyritic smelting to 600° C. by the time the next one is introduced, and at this temperature the velocity may rise to 1,100 ft. per minute. In the downcomer, which also carries away the air that enters by the feed doors, the velocity varies from 1,000 to 1,500 ft. per

[1] HAAS, *Eng. Mining J.*, 1910, XC, 814.

minute. The composition of the gases has been given on pages 136, 148, and 153. The temperature will have to be reduced to 300° C. and the velocity to 200 ft. per minute in order that the fine dust may fall out.[1]

A description of methods for recovering flue dust is given in §145.

104. Hearth Accretions (Sows), Etc.—Hearth accretions are of less common occurrence in treating sulphide ores, since the internal crucible has been abandoned. An accretion consists of Fe-Cu alloy mixed with Fe_3O_4, matte, slag, perhaps some speise and other metallic compounds. The formation of a sow in treating roasted ore is probably caused by an excessive reducing effect upon the oxidized iron in the charge. In partial pyritic smelting, especially when a slag of high formation temperature is formed, causing FeS to split in part into Fe and S, the formation of a sow has probably to be attributed to the separation of Fe from matte; Fulton[2] believes the separation to be due in part to the reactions $2FeS + Fe_3O_4 = 5Fe + 2SO_2$ and $FeS + 2FeO = 3Fe + SO_2$, but this has still to be proved. The other irregular products, such as wall accretions, furnace drawings, and refuse, need no further discussion.

105. Results.—The yield of metal in smelting sulphide copper ore carrying precious metal, but not contaminated with Pb and Zn, is high, as the only losses involved are those by dusting and slagging. The recovery of Cu is therefore well up in the nineties, say, 97+ per cent, that of Ag 98+ per cent, and of Au 100 per cent.

106. Production in the Blast Furnace of Metallic Copper from Matte.—Formerly matte was brought forward to metallic copper by roasting and then smelting in the blast furnace. This mode of procedure has become practically obsolete in the U. S., while it is still practiced in other countries. Low-grade matte is enriched to converting grade in the blast furnace by pyritic smelting. The practice of the Tennessee Copper Co. is given in Table XXX. It was found there that a 44 by 180-in. furnace put through more matte than ore, and that the reverse was the case with a 56 by 180-in. furnace; also that the 44 by 180-in. furnace gave a gas richer in SO_2 and SO_3 than the 56 by 180-in. furnace. With the matte[3] is mixed flue dust. The matte, held in a car of 105 cu. ft. capacity, is poured onto a sloping yard 80 ft. long which is divided into beds 18 ft. wide.

III. Smelting in the Reverberatory Furnace

107. Smelting in the Reverberatory Furnace in General and References to Reverberatory Plants (Welch process).[4]—The characteristics of matting sulphide

[1] Kiddie, *Trans. A. I. M. E.*, 1909, xl, 900.

[2] *Eng. Mining J.*, 1904, lxxviii, 333.

[3] Guess, *Eng. Mining J.*, 1910, xc, 866.

[4] Le Play, "Description des Procédés Métallurgiques employés dans le pays des Galles pour la Fabrication du Cuivre," etc., *Ann. mines*, 1848, xiii, 3, 389, 557; transl. into German by C. Hartmann, 1851, sold by Craz and Gerlach, Freiberg, Saxony; Levy, "Note sur la Métallurgie du Cuivre par la Methode Galloise," *Rev. Un. Min.*, 1884, xvi, 286–339; *Berg. Hüttenm. Z.*, 1885, xliv, 396, 493, 469, 485, 497, 507; Moore, *Eng. Mining J.*, 1910, lxxxix, 1021, 1063; Mathewson, *Eighth Internat. Congress Appl. Chem.*, 1912, iii, p. 113; *Trans.*

copper in the reverberatory furnace are that fine ore, usually rough-roasted by a separate operation, is smelted on a silica hearth for Cu-Fe matte, with from 33 to 45 per cent Cu, and an acid slag, with 36 + per cent SiO_2. The matte may be brought forward to metallic Cu either by several steps in reverberatory furnaces or by a single operation in a converter. The slag goes to waste. In the reverberatory furnace S is the leading reducing agent, the carbonaceous fuel burned serves only to furnish the heat necessary for the chemical reactions to take place between ores and fluxes.

A. I. M. E., 1912, XLIV, 781; LAIST, *Eighth Internat. Congress Appl. Chem.*, 1912, III, 97; *Trans. A. I. M. E.*, 1913, XLIV, 806.

References to Reverberatory Plants before 1913

American Smelters Securities Co.: MATHEWSON, *Trans. A. I. M. E.*, 1912, XLIV, 781.

Anaconda: MATHEWSON, *Eng. Mining J.*, 1903, LXXVI, 165; *Mineral Ind.*, 1902, XI, 200; *Trans. A. I. M. E.*, 1912, XLIV, 781; HOFMAN, *Trans. A. I. M. E.*, 1904, XXXIV, 258; AUSTIN, *op. cit.*, 1906, XXXVII, 431; Correspondent, *Mines Minerals*, 1907, XXVIII, 131, 248; OFFERHAUS, *Eng. Mining J.*, 1908, LXXXV, 1189, 1234.

Balaklala Smeltery: Report, *Eng. Mining J.*, 1909, LXXXVII, 501; MARTIN, *Mining Sci.*, 1911, LXIII, 338.

Cananea Smeltery: BRINSMADE, *Mines Minerals*, 1907, XXVII, 465; RICKETTS, *Trans. Inst. Min. Met.*, 1909–10, XIX, 147; *Mining World*, 1909, XXXI, 1115; *Eng. Mining J.*, 1910, LXXXIX, 314; MATHEWSON, *Trans. A. I. M. E.*, 1912, XLIV, 781.

Garfield Smelter: BEASON, *Eng. Mining J.*, 1906, LXXXI, 509; INGALLS, *op. cit.*, 1907, LXXXIV, 575; BRINSMADE, *Mines Minerals*, 1908, XXVIII, 305; MATHEWSON, *Trans. A. I. M. E.*, 1912, XLIV, 781.

Great Falls: HOFMAN, *Trans. A. I. M. E.*, 1909, XXXIV, 289; MATHEWSON, *op. cit.*, 1912, XLIV, 781.

International (Tooele) Smelter: Editor, *Mines Methods*, 1909, I, 149; PALMER, *Mining World*, 1910, XXXIII, 945; Editor, *Eng. Mining J.*, 1910, XC, 1059; REPATH and MCGREGOR, *Mines Minerals*, 1911, XXXI, 322; Correspondent, *Mining Sci. Press*, 1912, CIV, 371; MATHEWSON, *Trans. A. I. M. E.*, 1912, XLIV, 781; THOMSON and SICKA, *op. cit.*, 1913.

Kedabeg (Kankasus): KÖLLE, *Eng. Mining J.*, 1905, LXXX, 201; *Mining Mag.*, 1905, XII, 471; *Trans. Inst. Min. Met.*, 1904–05, XIV, 497; SCHNABEL, *Eng. Mining J.*, 1891, LII, 566; GOLOWATSCHEFF and LANGE, *Glückauf*, 1913, XLIX, 424, 526, 732; *Eng. Mining J.*, 1913, XCV, 15 (HAHN).

Kyshtim Smeltery: CARLYLE, *Eng. Mining J.*, 1912, XCIII, 1231; MATHEWSON, *Trans. A. I. M. E.*, 1912, XLIV, 781; ASEJEW and LANGE, *Metall u. Erz*, 1913, X, 108.

Steptoe Valley: INGALLS, *Eng. Mining J.*, 1907, LXXXIV, 815; Editor, *Mines Methods*, 1909, I, 72; HUMPHREYS, *Mining World*, 1909, XXX, 273; PALMER, *op. cit.*, 1910, XXXII, 691; MATHEWSON, *Trans. A. I. M. E.*, 1912, XLIV, 781.

United Verde Copper Co.: VAIL, *Eng. Mining J.*, 1913, XCVI, 287, 341.

Wallaroo and Moonta: CLOUD, *Trans. Inst. Min. Met.*, 1906–07, XVI, 55; *Eng. Mining J.*, 1907, LXXXIII, 324; WILLIAMS, *Eng. Mining J.*, 1908, LXXXVIII, 55.

Yampa Smeltery: CHRISTENSEN, *Mining World*, 1909, XXX, 621; PALMER, *Mining Sci. Press*, 1909, XCIX, 225; *Mines Minerals*, 1910, XXXI, 14.

Peters, *Mineral Ind.*, 1893, II, 270; "Modern Copper Smelting," 1895, p. 466; HALL, *Eng. Mining J.*, 1895, LIX, 363; TERRILL, *op. cit.*, 1898, LXVI, 665; HERING, *Berg. Hüttenm. Z.*, 1895, LIV, 294.

J. Soc. Chem. Ind., 1891, X, 4; *School Mines Quart.*, 1891–92, XIII, 87; *Berg. Hüttenm. Z.*, 1891, L, 97; *Eng. Mining J.*, 1890, XLIX, 566; 1891; LI, 141, *Colliery Guardian*, 1891, LXI, 69; STYRI, *Metallurgie*, 1912, IX, 426, 449.

The reverberatory-furnace charge is best made up of fine ores, hence the method of smelting is used mostly for concentrates; coarse ores, rich enough to pay for direct smelting, usually go to the blast furnace. The ores are rough-roasted in fine-ore furnaces and are charged, if possible hot (400 to 500° C.), into the smelting furnace.

Reverberatory smelting of ore for matte has been developed in the United States first by Pearce in Colorado, later by Allen, Keller, Klepetko, Mathewson, and others in Montana, and more recently by various operators in the southwest, so that it occupies today a position quite different from the early Welsh or European Continental practice. It will therefore be discussed as an independent process.

108. The Reverberatory Matting Furnace in General.—The sketches given in Figs. 110 to 123 represent the leading stages in the development[1] of the matting furnace. The figure for the year 1848 resembles the early form described by Le Play. This has a large deep fireplace, an oval concave hearth contracted slightly near the firebridge, very much so near the flue; there are a working door on one side, a matte tap on the other, and a skimming door at the end, above which is an inclined flue leading the gases into a well-drawing stack. The hearth slopes from fire and flue bridges toward the center and from the back toward the front, the deepest point, at which is situated the taphole. As this furnace treated only 8.6 tons of charge in 24 hr., it was essential that the capacity be increased, especially in the United States, if it was to compete with the blast furnace. This was done by R. Pearce, first at Black Hawk,[2] and later at Argo,[3] Colo. The original oval form was retained from 1878 until about 1891, when one side was slightly straightened in order to furnish room for two working doors. The cast-iron rule of requiring an oval plan having been broken, the oval sides were straightened more and more, and thus a gain in hearth area secured until the standard of 1900, with a hearth 20 by 50 ft., was reached. Then E. P. Mathewson increased the length of the coal-fired furnace to 102 and even 115 ft. 10 in., and with it the mode of operating. Oil-fired furnaces reached in 1911 a length of 120 ft. 10 in.; in 1913, one of 130 ft.

References to Reverberatory Furnace Plants Since 1913

Arizona Copper Co.: FLYNN, *Trans. A. I. M. E.*, 1916, LV, 805.
Arizona Smelting Plants: MCGREGOR, *Trans. A. I. M. E.*, 1916, LV, 781.
Calumet and Arizona: VAIL, *Eng. Mining J.*, 1914, XCVIII, 102; DE KALB, *Mining Sci. Press*, 1918, CXVII, 181.
Copper Queen Smelting Works: VAIL, *Eng. Mining J.*, 1915, XCIX, 1.
El Paso Smelting Works: VAIL, *Eng. Mining J.*, 1914, XCVIII, 465, 515.
Garfield Smelter: RICKARD, *Mining Sci. Press*, 1918, CXVII, 853.
International Smelter, Miami: KERNS, *Eng. Mining J.*, 1918, CVI, 689.
Nevada Consolidated Smelter: PARSONS, *Mining Sci. Press*, 1921, CXXIII, 393.
United Verde Extension: NICHOLS, *Eng. Mining J.*, 1918, CVI, 689.
United Verde Smelter: PARSONS, *Mining Sci. Press*, 120, CXXI, 547.
Washoe Reduction Works: AUSTIN, *Mining Sci. Press*, 1916, CXII, 195, 304, 547.

[1] Editor, *Mining Sci. Press*, 1910, CI, 69; MATHEWSON, *loc. cit.*

[2] EGLESTON, *Trans. A. I. M. E.*, 1875–76, IV, 276.

[3] PEARCE, *Trans. A. I. M. E.*, 1889–90, XVIII, 55.

The ore-smelting furnaces at Anaconda, fired with coal dust, were gradually increased to 143 ft. long and 20 ft. 4 in. wide, while a furnace for treating liquid converter slag with the addition of some ore was made 153 ft. long and 23 ft. wide. Experiments at various plants, notably the Copper Queen at Douglas, Ariz., indicated that there was no advantage in an excessively long hearth, and the most recent constructions have been approximately 100 ft. long. Some

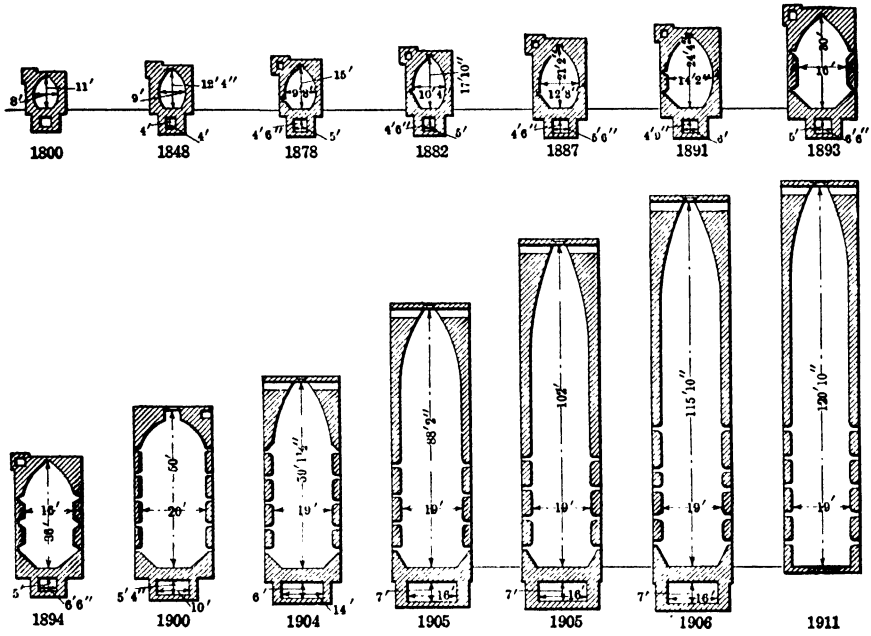

FIGS. 110–123.—Evolution of reverberatory matting furnaces.

operators favor a length as low as 85 ft. Experiments at the Copper Queen plant in 1918 under the direction of Col. H. H. Stout[1] showed that a large increase in furnace capacity could be obtained by abolishing the former downward pitch of the roof and contraction of the walls at the flue end. There was also

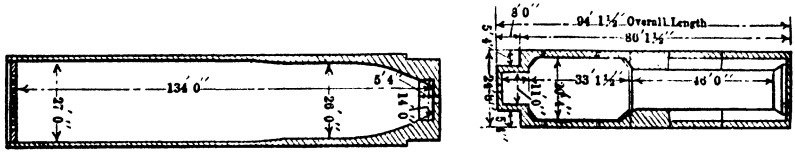

FIGS. 124–125.—Reverberatory furnaces, 1924.

an improvement obtained by enlarging the uptake for the gases. These changes have been adopted by many smelting plants on rebuilding their reverberatory furnaces.

Although the present tendency is toward shorter furnaces, there is an equally strong movement in favor of greater width. There are difficulties in

[1] MATHEWSON, "Notes on Recent Metallurgical Progress," *Eng. Mining J.*, 1918, CVI, 138.

construction, however, which have hampered this development so that few furnaces are over 25 ft. wide and the widest thus far reported is 30 ft.

109. Examples of Reverberatory Furnaces.—The furnaces in different plants vary in detail, but the main features are shown in the three chosen for

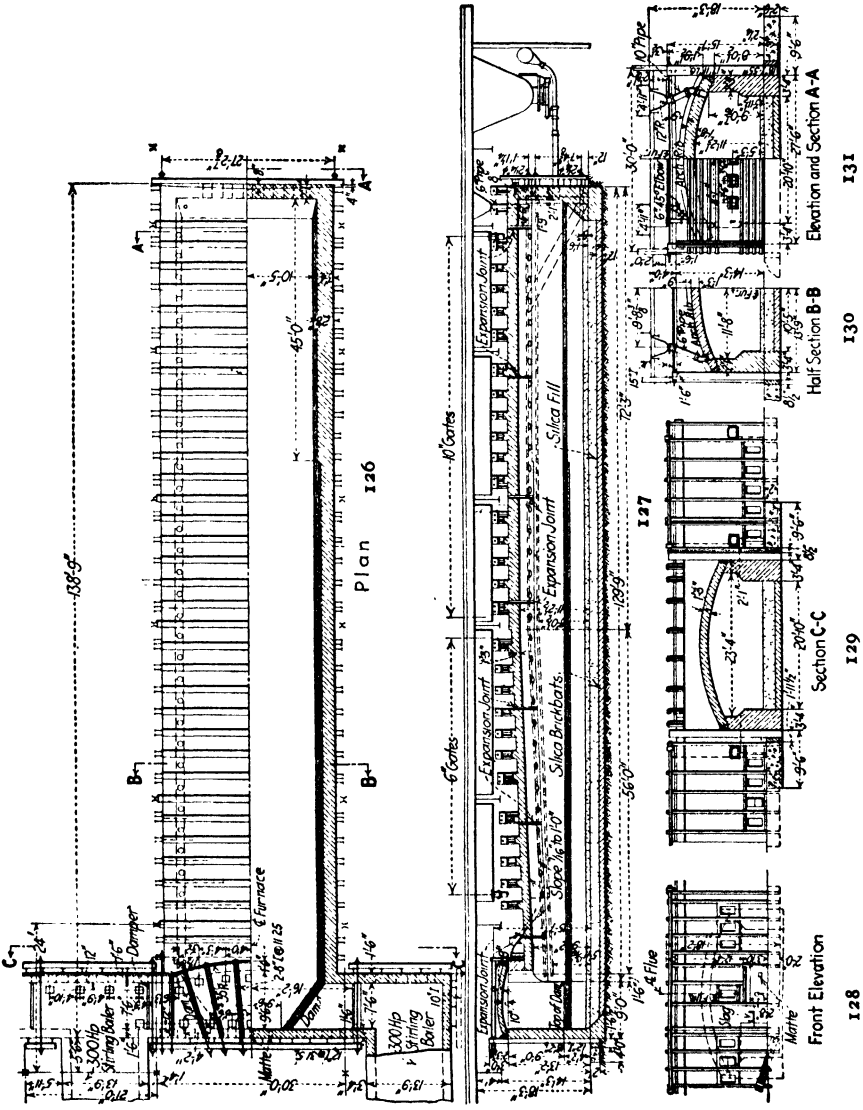

FIGS. 126–131.—Anaconda reverberatory smelting furnace.

illustration, *viz.*, the Anaconda Copper Mining Co., Anaconda, Mont., the Nevada Consolidated Copper Co., McGill, Nev., and the Phelps Dodge Corporation, Douglas, Ariz.

110. Furnace of the Anaconda Copper Mining Co., Anaconda, Mont., 1919.—This is shown in Figs. 126 to 131. It has a hearth 126 ft. long and 23

ft. 4 in. wide inside. The plan and horizontal section (Fig. 126) shows the I-beams and tie rods for holding the brickwork, the arrangement of the drop-holes for introducing the calcine and fettling ores, the way the furnace is tapered at the flue end, the location of the waste-heat boilers, etc. The vertical section (Fig. 127) indicates the character of the furnace bottom, the arrangement of the header flue, the coal-dust burner, the hoppers for receiving the charge, the gates through which the charge is dropped into the furnace, the tracks on which the charge cars run, etc. Figure 128 shows the elevation of the flue end and the position of the slag tap and matte taps, etc. Figure 129 shows a cross-section back of the header flue with elevation of the flue, also the shape of the roof arch and construction of the side walls. Figure 130 is a cross-section 42 ft. from the flue end and shows the feed hopper with gate, the construction of the side wall, the shape of the arch, etc. Figure 131 is an elevation section at the firing end, showing the burner holes, the feed hopper, the construction of the side wall, etc.

111. Furnace of the Nevada Consolidated Copper Co., McGill, Nev., 1922.—This is 134 ft. long by 27 ft. wide (max.). The plan (Fig. 132) shows the usual ironwork for holding the brick in place, the arrangement of the calcine and fettling hoppers, the tracks for bringing material to the furnace, the tracks for the fettling car, the arrangement of the flue, two central hoppers, one for fettling the bridge wall and one at track 4 for calcines and miscellaneous material.

The horizontal section in Fig. 133 shows the position of the burner holes, the contraction of the walls beginning 57 ft. from the flue end, the arrangement of the gas uptake, etc. The longitudinal section (Fig. 134) shows the calcine hoppers with track above each, the arrangement of the dropholes for calcine and fettling ores, the fettling car, the coal-dust burners, the arrangement of the gas uptake, the bottom construction, the position of the matte taps (side) and slag tap (end), the matte car, etc. The door shown in the side is an auxiliary skim door, but is bricked up and used only in emergencies. Figure 135 is a cross-section 25 ft. from the firing end. It shows the arrangement of the calcine hoppers, the position of the track above them, the position of the fettle tracks, the position of the burner holes, the shape of the arch, the construction of the side walls, etc. Figure 136 shows a cross-section 40 ft. from the flue and looking toward the firing end. It shows the fettle storage hoppers on each side with distributing cars below them running on tracks beside the fettle hoppers which feed to the furnace. The central charge hopper shown on the plan (Fig. 132) is here shown in elevation. The general shape of the roof and side walls is also shown.

The principal differences to note between this furnace and the Anaconda furnace previously described are the shape of the hearth near the flue end, the arrangement of the header flue, the arrangement of the charge tracks, and the slope of the side walls.

The contraction is advantageous with such a wide furnace, for it cuts down the amount of matte in storage and gives better draft regulation.

At present, liquid converter slag is introduced through a hopper between tracks 1 and 2, but it is planned to granulate this slag and add it to the calcines to secure better reduction and promote fluxing.

The slag from the reverberatory furnaces is granulated in launders running parallel to and between the furnaces.

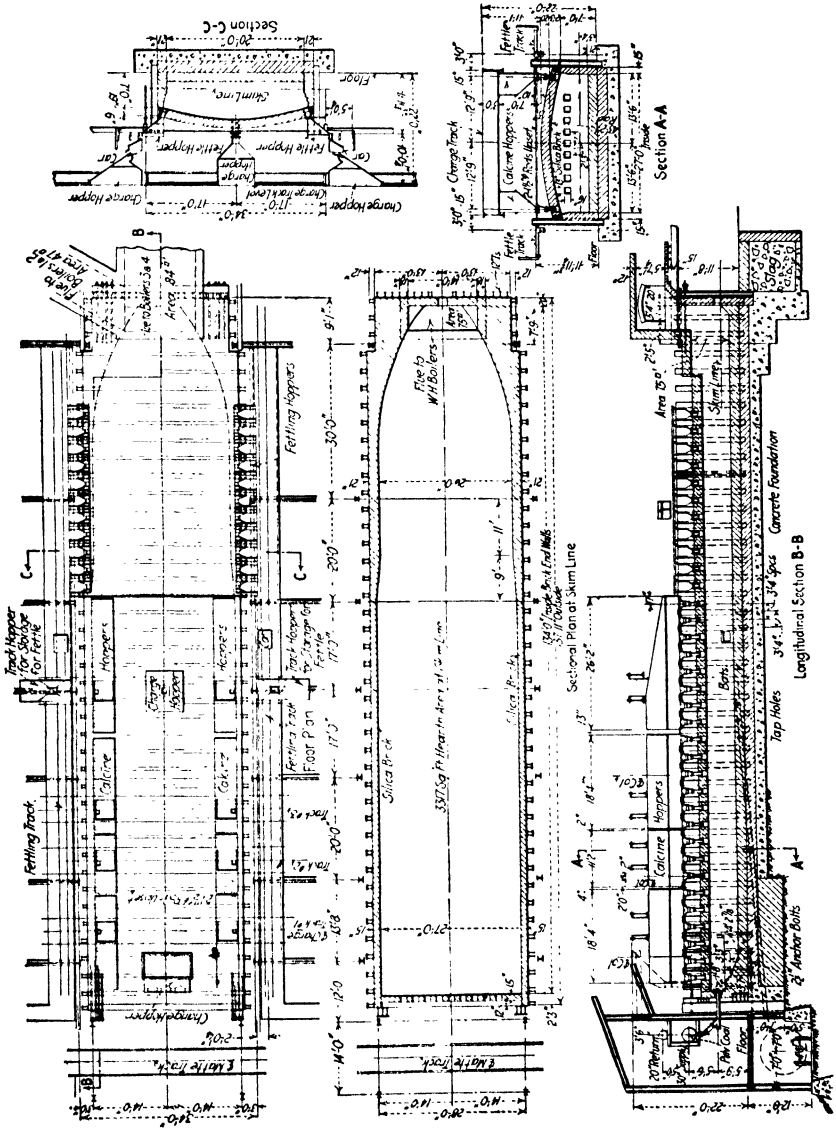

FIGS. 132–136.—Reverberatory smelting furnace at the Nevada Consolidated smelter.

112. Furnace of the Phelps Dodge Corp. at the Copper Queen Smelter, Douglas, Ariz., 1923.—This has several novel features which are well illustrated in the figures. The plan (Fig. 137) shows that the furnace may be divided into two parts, one of which is essentially for smelting and the other for settling

and storing matte. The furnace chamber as a whole is 91 ft. 7½ in. long. For a distance of 50 ft. from the firing end the width at the top is 20 ft. 4 in. with the walls sloping at 60 deg., giving a bottom width of 13 ft. The remainder of the chamber has no slope to the side walls, making the width at the skim line

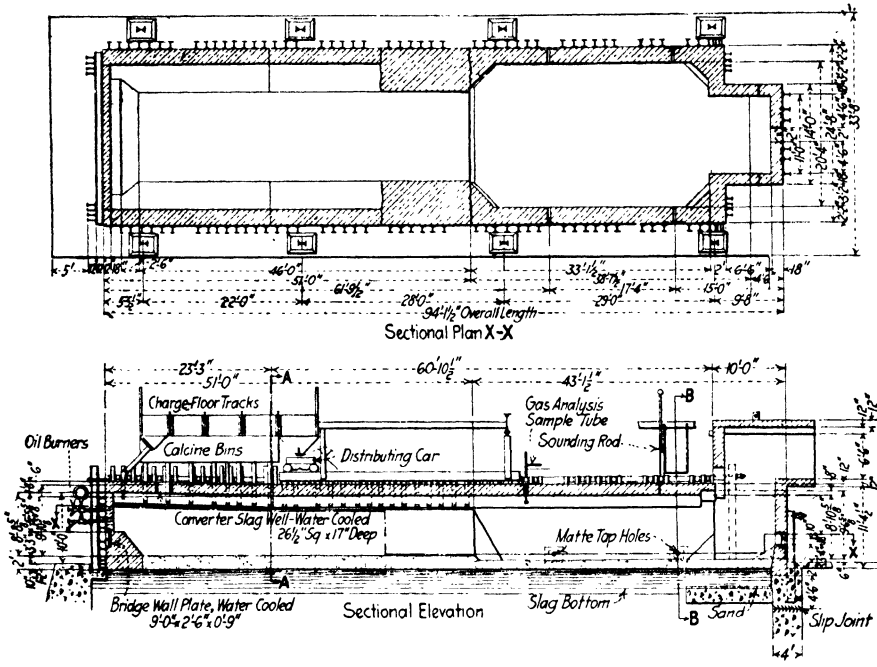

FIGS. 137–138.—Copper Queen reverberatory smelting furnace.

the same as at the top (20 ft. 4 in.). The furnace floor of this section is 8 in. below the section near the firing end. There are two matte taps on each side of the furnace as indicated, and a slag tap at the flue end. The figure shows the columns for supporting the superstructure and the ironwork for holding the bricks in place.

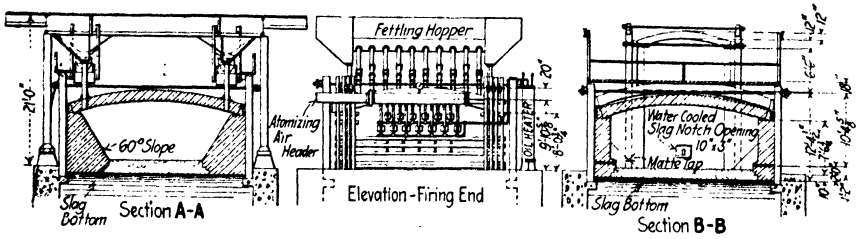

FIGS. 139–141.—Copper Queen reverberatory smelting furnace.

Figure 138 shows a vertical section with the position of the two rows of oil burners, the calcine tracks and bins, the distributing car for fettling ores, the well for introducing liquid converter slag to the furnace, a water-cooled tube

for taking gas samples, the position of the matte and slag taps, the depression of the bottom in the section near the flue end, the gas uptake, etc. Figure 139 is a cross-section 23 ft. 3 in. from the firing end. It shows the arrangement of the calcine hoppers, the slope of the walls, etc. Figure 140 is an elevation of the firing end. It shows the burner arrangement, the pipes for fettling along the end of the furnace, the heater for warming the oil, etc. Figure 141 shows a section near the flue end with the slag tap, two of the matte taps, the general shape of the walls and roof, etc.

This furnace emphasizes the two distinct functions of a reverberatory furnace, viz., smelting of the charge and settling of the matte. The sloping walls of the smelting section allow the charge to assume its angle of repose most readily and at the same time the cross section of the combustion zone is slightly decreased, which should intensify the heat and hasten fusion. In the matte settling and storage section the straight side walls and greater hearth depth are desirable to promote settling and allow adequate matte storage. By introducing these features, coupled with adequate flue area, it is possible to shorten the furnace and still maintain a capacity equal to a furnace of greater length. Another feature of the furnace is the flat roof and straight sides thus eliminating the usual contraction at the flue end which is common to most types.

It cannot be predicted at this time (1924) what effect this departure from previous forms will have on reverberatory design in general, but it is possible that it is a transition to something quite different from usual constructions.

113. The Working Bottom.—This must be refractory to resist high temperatures, strong to hold the heavy bath of matte or copper, dense to prevent percolation of matte or copper, and elastic to stand changes in temperature without cracking. The bottom used to be made universally of silica, more or less pure, fritted in place to form a single block. Sand bottoms have been replaced in some instances by bottoms of silica brick. At first they did not prove altogether satisfactory, as it was difficult to make the joints sufficiently tight to prevent matte from percolating and floating the brick, but this has been overcome. Clay bricks have been frequently advocated and are said to be used in Wales and New South Wales. A basic bottom has been recommended by Gilchrist[1] for the treatment of white metal, impure bottoms and blister copper, in order to facilitate the removal of As and Sb, and to reduce the amount of slag that is formed. The basic hearth, while it stood satisfactorily, was not especially successful in removing impurities; at first it readily absorbed As and Sb, but ceased to do this later on and even gave up some impurity to subsequent charges. In the basic matte converter (§132) magnesite brick forms a dense and resisting lining as long as the temperature does not exceed 1,150° C. The reverberatory furnaces of the Canadian Copper Co. have magnesite bottoms and sides and are working satisfactorily. Chromite and chrome brick have been

[1] *J. Soc. Chem. Ind.*, 1891, x, 4; *School Min Quart.*, 1891–92, XIII, 87; *Berg. Hultenm Z.*, 1891, L, 97; *Eng. Mining J.*, 1890, XLIX, 566; 1891, LI, 141; *Coll. Guard.* 1891, LXI, 69; *Styri, Metallurgie*, 1912, IX, 426, 449.

tried as a refractory to form a bottom; though they were not melted nor fluxed, they crumbled away.[1] Chrome brick is used at the slag line in matting and in acid-refining furnaces, and gives satisfaction. Addicks and Browne,[2] constructed a refining furnace having a working bottom of magnesite, and sides and roof of chrome brick.

Silica sintered in place still retains its position as the common material for the working bottom. This is 24 to 30 in. thick and slopes from the ends and the back toward the deepest point, the taphole at the front. The depth of the basin, *i.e.*, the distance from the taphole to the level of the skim plate, is 13 or 14 in. There are two varieties[3] of crystallized SiO_2, quartz with specific gravity 2.65 and tridymite with specific gravity 2.32. Upon heating, quartz changes slowly into tridymite with an increase in volume of 20.7 per cent.[4] The more tridymite prevails in the original sand, or rock, usually crushed to pass a 10-mesh sieve, or the more the original quartz has been converted into tridymite by calcining, the more desirable will be the sand. Further, the more finely divided the particles of SiO_2 and the associated Fe_2O_3, Al_2O_3, CaO, etc., the more easy will be the conversion of quartz into tridymite, and the stronger will be the hearth on account of the even distribution of the glassy bond which holds together the particles of SiO_2. Lastly, the sand may contain enough bases to be slightly fusible or it may be practically infusible, when either a small amount of crushed slag will be mixed in to serve as a bond, or the sand will be fritted in the furnace and some slag melted down upon the hearth to fill in the interstices and bind together the particles.

As a foundation for the working bottom, some prefer concrete and others poured slag.

The procedure at one plant will be given as fairly typical.

The foundation is made of poured slag, which should be at least 6 ft. in depth. The working bottom is prepared by dumping in sufficient silica to cover the slag foundation to a depth of 2 ft. The silica used is SiO_2 95 per cent, with about 1½ per cent each of Al_2O_3, Fe_2O_3, and CaO. This is crushed through ¼ in. ($\pm$95 per cent should pass 10 mesh) and should contain less than 5 per cent water. The bottom is shaped by men with shovels. It should be leveled from the center toward the side walls and ends with a bank around the edges sloping about a foot up the side walls to prevent matte runaways at the junction of bottom and sides. When the bottom is shaped and patted in place, it should be about 18 in. below the skimming plate at the slag end of the furnace.

The fire is now turned on and the heat slowly raised until at the end of about 48 hr. the temperature is sufficient to glaze the surface of the bottom. This temperature (1,450 to 1,650° C.) will also cause the silica brick in the roof and sides to drip. The fire is now turned off, the dampers closed, all holes sealed, and the bottom allowed to anneal. The annealing continues until the furnace

[1] MOORE, *Eng. Mining J.*, 1910, LXXXIX, 1023.

[2] *Eng. Mining J.*, 1914, XCVII, 421; U. S. Pat. 1083719, Jan. 6, 1914.

[3] HOFMAN, "General Metallurgy," 1913, p. 365.

[4] GRUM and GRZIMAILO, *Stahl u. Eisen*, 1911, XXXI, 224.

becomes black, which takes about 48 hr. after which the first charge may be added. A first charge of granulated slag is the best practice, but if this is not available a regular charge of calcine may be used. This material should be charged slowly, giving sufficient time for a low fire to start the melting. The heat is gradually raised and the rate of feeding increased until at the end of about ten days the furnace is running normally.

At another plant a 2-ft. layer of quartz sand and mill tailings is put on a slag bottom and fritted in place. High-grade matte crushed to ¾ in. is then introduced. The matte melts and is absorbed by the sand and the operation is then repeated, after which a light charge of calcine is introduced and the furnace gradually brought into regular operation.

When old furnaces are torn down it is usually found that the silica bottom has been entirely replaced by slag, magnetite, and matte. These basic materials form a more impervious bottom over the slag foundation than the original silica, and the question at once arises regarding the possibility of using such material originally. It is possible, however, that better results are obtained by the replacement method than by original use of the replacing substances.

114. Firing the Reverberatory Furnace.—All modern reverberatory furnaces use either pulverized coal or fuel oil, the choice depending on economic conditions. Before the advent of pulverized coal a gas-fired regenerative furnace was operated at Great Falls, Mont.[1] These furnaces were an improvement over the grate-fired type, but could not compete with the present form using pulverized coal, especially with the economy obtained by passing the gases through waste heat boilers.

115. Pulverized Coal.—The first successful application of pulverized coal to copper reverberatory furnaces was made by Browne at Copper Cliff. The blanket of ashes formed on the charge tended to hold up copper in the form of fine ore particles, and it was only when the present method of continuous withdrawal of slag succeeded the old method of skimming through side doors that serious slag losses were overcome. The furnaces usually operate with five to six burners varying from 5 to 9 in. in diameter. At the Nevada Consolidated smelter at McGill nine to eleven burners are used 7 in. in diameter. The amount of coal used varies from 275 to 400 lb. per ton of charge smelted. The air used has usually 10 to 16 oz. pressure. No attempt will be made here to describe the production of pulverized coal or details of its use. These facts may be found elsewhere.[2] The firing end of one of the Anaconda furnaces is shown in Fig. 142.

116. Oil.[3]—Crude California oil of 14 to 17° Bé. as a fuel was first used in 1906[4] in the reverberatory furnaces of the Consolidated Arizona Smelting Co.,

[1] HOFMAN, *Trans. A. I. M. E.*, 1904, XXXIV, 258; MATHEWSON, *op. cit.*, 1912, XLIV, 781.

[2] HOFMAN, "General Metallurgy," 1913, pp. 183–189, *Eng. Mining J.*, 1906, LXXXI, 274 (SÖRENSEN); 1908, LXXXV, 121 (Editor), 326 (TRENT), 582 (SHELBY), 269, 660 (THOMAS), 778 (W. B. S.), 915 (B. S. F.), 1017 (RICHMOND), 1064 (ROBINSON); *J. Can. Mining Inst.*, 1912, XV, 115 (BROWNE).

[3] HERRICK, *Mines Minerals*, 1910, XXX, 367.

[4] ROBINSON, *Eng. Mining J.*, 1908, LXXXV, 1064.

Humboldt, Ariz. The furnaces[1] were large, having a hearth 98 ft. by 19 ft. 1 in. Each furnace had nine steam-blown burners, three at the end and three on either side, hung by universal connections so that they could be made to point in any direction. The oil was fed under a pressure of 80 lb.; the consumption was from 11 to 19 per cent of the weight of the charge or from 29 to 52 gal. per ton of ore, and the cost delivered in tank cars was $1.25 per barrel of 42 gal. The temperature was higher than that formerly attained with the coal previously used; slags with SiO_2 48 and CaO 11 per cent were made, while with coal firing the highest was SiO_2 42 per cent. These early favorable results led to the adoption of oil in the Southwest where California oil forms the cheapest fuel

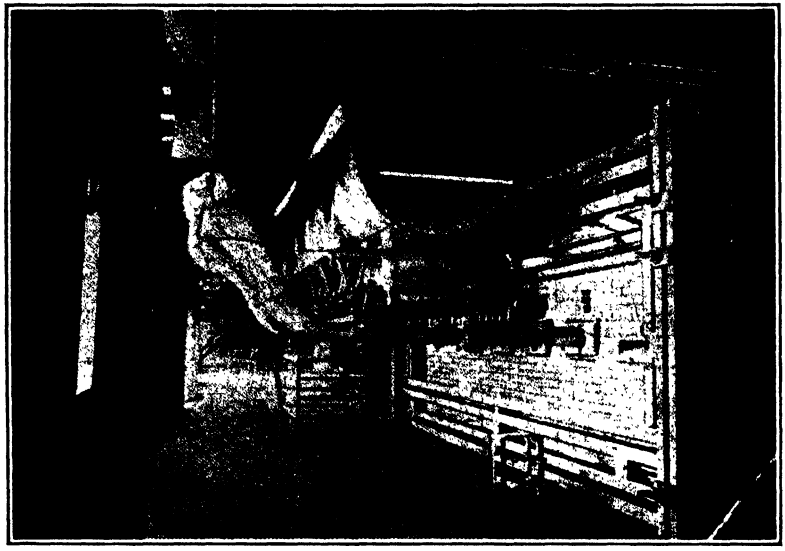

FIG. 142.—Firing end of Anaconda reverberatory furnace.

The oil used at present is required to have at 60° F. a specific gravity of not less than 13.5° Bé.; the density usually is 14° Bé.

Data of some of the leading plants using oil as fuel are given in Table LIII.

The burners[2] used in copper reverberatory furnaces are all atomizers. Both steam and air serve for producing the spray of oil, but most plants use air regularly with steam available for emergencies. In general, steam is more economical for low pressures up to 10 lb., air for pressures above 10 lb. For the same effect the air pressure has to be higher than the steam pressure. Steam, which must be dry, produces a longer flame than does air; with air the oil must be warm (80 to 100° C.) in order to have the desired mobility. A mixture of air and steam has not given favorable results. Most works use a high pressure, as this produces a long flame, which melts the charge more quickly than does a shorter flame. Thus, *e.g.*, at Hayden, Ariz., five burners with a pressure of 3 lb.

[1] PETERS, "Principles of Copper Smelting," 1907, p. 210.

[2] HOFMAN, "General Metallurgy," 1913, p. 330.

melted only the charge of the first row of feed hoppers and made the bridge end extremely hot, while three burners and 12 lb. pressure readily melted the charge of the second row of feed-hoppers.

Pressure of steam or air and strength of draft are closely connected. The flame of an oil burner is short and a clear white. In order to heat a long furnace a strong draft is necessary. Table LI gives the results of one of the 24-hr. tests with low and high draft, in an oil-fired reverberatory furnace, carried out

TABLE LI.—TWENTY-FOUR-HOUR TESTS WITH LOW AND HIGH DRAFT AT STEPTOE VALLEY SMELTER, 1911

Dec. 3 Low Draft — Dec. 1, 2, 4, and 5 High Draft

Date	Draft, inches of H_2O		Total charge, tons	Oil fired, barrels	Tons charge per barrel oil	Gallons H_2O evaporated from and at 212° F.	B.H.P. per boiler	Evaporation factor, pounds H_2O per pound oil
	Bridge	Verb						
Dec., 1911								
1	0.32	0.95	499	370	1.35	83,853	420	5.57
2	0.30	0.95	503	357	1.41	83,139	418	5.75
3	**0.09**	**0.25**	**237**	**220**	**1.08**	**50,713**	**254**	**5.65**
4	0.34	0.90	397	301	1.32	80,124	402	5.75
5	0.34	0.92	466	387	1.20	88,010	440	5.62
Av. high draft, days	0.33	0.93	441	354	1.25	83,780	420	5.84

Percentage Analysis of Charge

	Calcines	Seconds	Hot slag	Fettling	Lime-stone	Flue dust	Dried concen-trates	Grade of matte
1	59.6	15.1	8.0	6.0	11.3	.....	.....	42.9
2	58.3	19.3	6.9	4.0	9.7	1.8	.....	45.6
3	**64.5**	**16.5**	.....	**5.9**	**13.1**	.....	.....	**45.0**
4	56.9	24.4	.....	5.3	9.6	3.8	.....	44.9
5	53.2	17.2	9.7	4.7	12.4	2.8	.....	43.6
Av. high draft, days	57.0	19.0	8.1	5.0	10.7	2.8	.....	44.2

Assay and Analysis of Slag

	Per cent Cu	Per cent SiO_2	Per cent FeO	Per cent CaO	Per cent Al_2O_3
1	0.43	43.0	34.8	10.6	7.8
2	0.47	42.2	36.8	9.4	7.3
3	**0.40**	**43.0**	**35.0**	**8.9**	**7.6**
4	0.63	43.6	34.7	10.4	8.3
5	0.40	45.0	33.4	9.7	8.3
Av. high draft, days	0.48	43.5	34.9	10.0	7.9

Gallons water evaporated corrected for (1) meter calibration, (2) blowdown, (3) steam pressure and feed-water temperature.

by Sörensen in 1911. The type of furnace used in these tests is no longer of interest, but the facts brought out are still true with present designs. A comparison of the figures of Dec. 3 (low draft) with the average of Dec. 1, 2, 4, and 5 (high draft) brings out in a striking way the necessity of a high draft.

Various forms of burners are used, but in general they are of the atomizing type. Modifications of the Sörensen or Steptoe Valley burner shown in Fig. 143 are found in many plants.

A burner developed at the Copper Queen smelter is shown in Fig. 143. This has proved so successful that several other plants have adopted it. One

advantage of this burner is that it can operate with blast-furnace air instead of converter air, thus saving the difference between $2.20 and $9.25 per million cubic feet.

The present operation at the Copper Queen plant uses 35 oz. of air with Mexican petroleum.

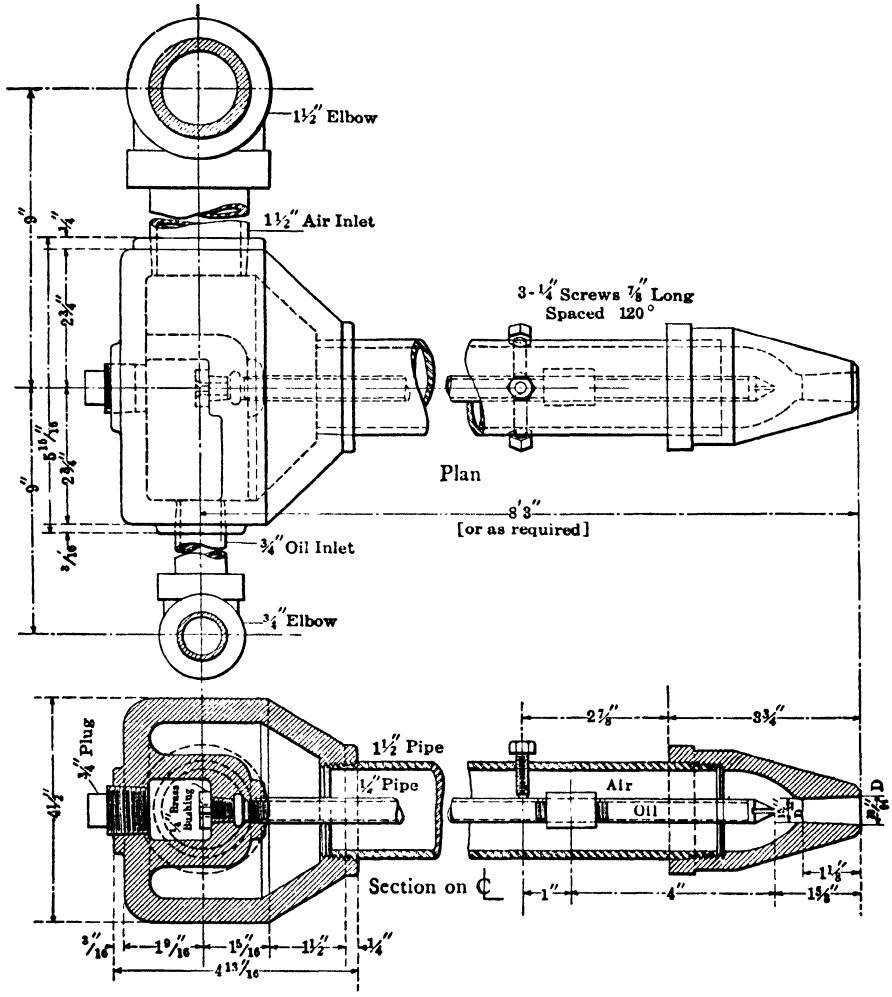

FIG. 143.—Sörensen oil-burner, high-pressure air.

117. Charging the Reverberatory Furnace.—Until the introduction of side charging the furnaces were equipped with a few large hoppers near the firing end through which charges were intermittently dropped. At first large charges were dropped at long intervals, but experiments by Mathewson at Anaconda[1] showed much better results by using small charges at short intervals.

[1] AUSTIN, *Trans. A. I. M. E.*, 1906, XXXVII, 470.

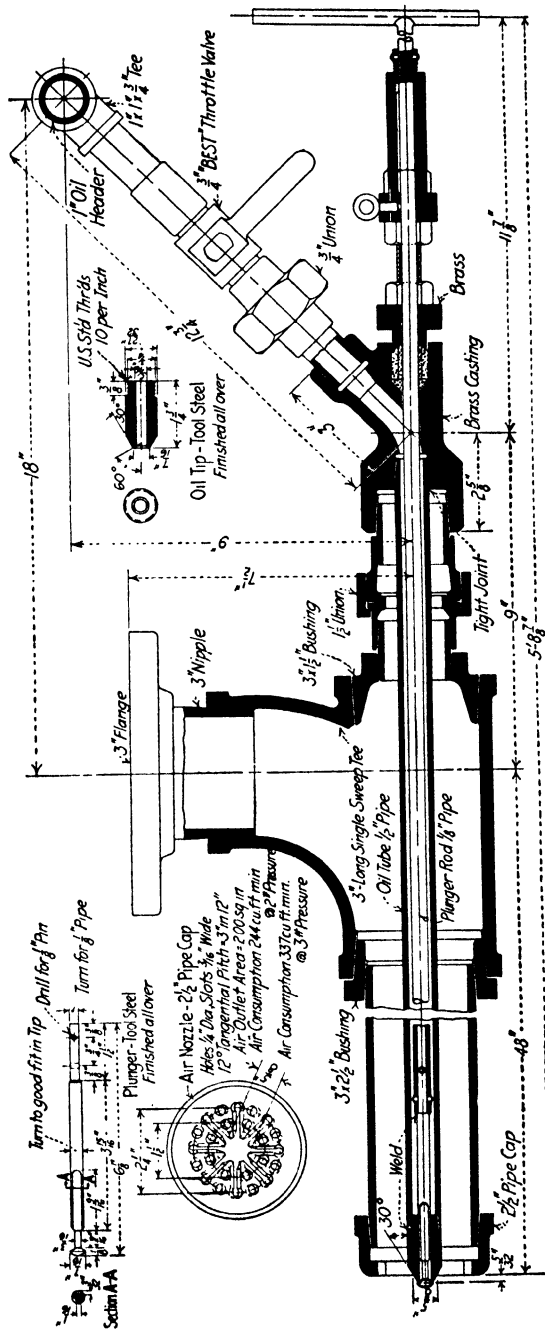

FIG. 143.—Oil burner used at the Copper Queen smelter.

Up to about 1909 it was common practice to draw off most of the material from the furnace about once a month in order to repair the walls along the slag line. This was usually done by plastering them with clay. In 1909 a system was introduced at Cananea, Mexico,[1] whereby siliceous ores were charged every day along the side walls through holes in the roof. This successfully preserved the walls and in general prolonged the life of the furnace roof, which was often seriously affected by cracks produced during the cooling required for the periodic patching. It was but a step from this system to the modern side charging methods where all the calcined ore is introduced hot into the furnace through holes along the side. In some plants the ore is charged almost entirely within 25 to 30 ft. of the firing end, but in other plants it is charged regularly to half the length of the furnace. All furnaces are equipped with dropholes along the entire side in order to fettle the furnace between the point where regular charging stops and the flue end. Sometimes a special highly siliceous ore is used for fettling and in other cases some of the regular calcines are used. Fettling is carried out once a day or as needed.

The usual practice is to bring the ore from the roasters in calcine cars or larries which run on tracks above the furnaces. These tracks may run at right angles to the furnaces (Fig. 132), in which case the tracks serve several furnaces, or each furnace may have its own tracks branching from the main line and extending the entire length of the furnace. The calcine is dropped from the cars into charge hoppers out of the bottom of which extend the feed pipes to the furnace. These are equipped with gates operated by hand levers to regulate the introduction of the ore to the furnace. Because of the large dust loss occasioned by dropping the ore into the hoppers, some companies have devised a drophole with a special spring top which makes a sliding fit with the discharge opening of the calcine car. This makes it possible to introduce the calcine directly from the car into the furnace, thus minimizing both dust and heat losses.

118. Other Charging Methods.—At one plant some experiments were tried in introducing the charge by means of plungers at the side operating on the same general principle of a boiler stoker. It was thought by this means to minimize dusting in the furnace and to increase the smelting capacity through the gradual forcing inward of partly fused ore. Due to ore sticking to the end of the plunger, the plan proved unsuccessful and was abandoned.

Figure 144 shows the Ambler screw feeder at the Copper Queen Smelter. The screw operated by a hydraulic motor receives its charge from an overhead bin and forces it into the furnace. The object accomplished by this method is a great reduction in dusting within the furnace.

119. Chemistry of the Reverberatory Furnace.—The charge fed into the furnace along the side walls near the firing end takes the form of a V down the slopes of which molten material is continually flowing. Semi-fused material also slides down the sloping surfaces and floats on the molten bath in the bottom of the furnace. The high temperature which is the general rule today usually

[1] RICKETTS, *Trans. Inst. Min. Met.*, 1909–10, XIX, 160; *Mining World*, 1909, XXXI, 1116; *Eng. Mining J.*, 1910, LXXXIX, 317.

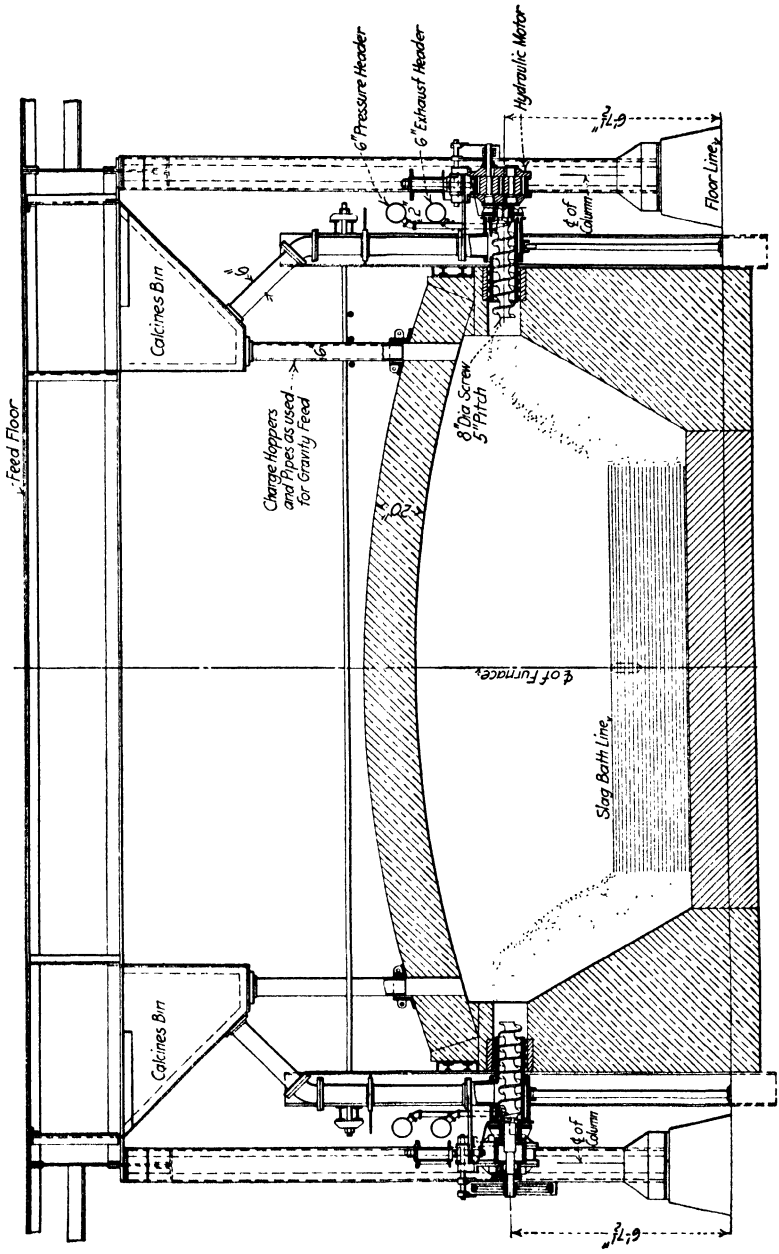

FIG. 144.—Ambler screw feed for reverberatory smelting furnace.

melts any masses of floating charge before they have drifted to the flue end of the furnace.

The charge as fed to the furnace consists of a mixture of oxides, sulphides, and sulphates of iron and copper, together with silica and silicates of various metals and earths. The reactions under the influence of heat are doubtless complicated but the following are probably typical:

$$Cu_2S + 2CuO = 4Cu + SO_2$$
$$Cu_2S + 2Cu_2O = 6Cu + SO_2$$
$$Cu_2S + 3CuO = 3Cu + Cu_2O + SO_2$$
$$Cu_2S + 6CuO = 4Cu_2O + SO_2.$$

The first two reactions begin at about 500° C. and all SO_2 is set free at 1,000° C.[1]

$$2Cu + FeS = Cu_2S + Fe$$
$$Cu_2O + FeS = Cu_2S + FeO$$
$$6CuO + 4FeS = 3Cu_2S + 4FeO + SO_2$$
$$Cu_2SiO_3 + FeS = Cu_2S + FeSiO_3$$
$$Cu_6Si_3O_{12} + 4FeS = 3Cu_2S + Fe_4Si_3O_{10} + SO_2.$$

The reduction of iron oxide may be explained by the following reactions:

$$3Fe_2O_3 + FeS = 7FeO + SO_2$$
$$Fe_2O_3 + Fe = 3FeO$$
$$Fe_2O_3 + CO = 2FeO + CO_2$$
$$Fe_2O_3 + SiO_2 = 2FeO + O + SiO_2.$$

The FeO formed unites with other oxides and SiO_2 to form the slag.

Although several investigations[2] report reactions forming the compound $Cu_2S \cdot 2FeS$, the work of Carpenter and Hayward previously referred to (page 167) indicates that the sulphides resulting from the furnace reactions form solid solutions and eutectic mixtures with no definite compound. There is, however, evidence that metallic iron is formed by the slow breaking up of FeS at high temperatures and this iron reacts with Cu_2S to form FeS and Cu.

Magnetite is present in the matte and slag from reverberatory furnaces and probably results from the partial reduction of Fe_2O_3. The FeS held in solution by the slag sulphurizes any slagged Cu, so that the Cu finally present in the slag is more in the form of suspended matte pellets or dissolved matte than as silicate. The Zn, Pb, As, and Sb of the charge are partly volatilized, partly matted, and partly scorified. Precious metals are collected in the matte.

[1] DOELTZ, *Metallurgie*, 1907, IV, 421.

[2] JUSCHKEWITSCH, *Metallurgie*, 1912, IX, 543; STAHL, *Met. Chem. Eng.*, 1918, XVIII, 313.

TABLE LII.—REVERBERATORY SMELTING PRACTICE
(Average Analyses of Charge and Products)

		Cu, per cent	Ag, oz. per ton	Au, oz per ton	Fe + Mn, per cent	S, per cent	CaO, per cent	SiO_2, per cent	Al_2O_3, per cent
International Nickel Co., Sudbury, Ont.	Charge	6.45	.....	.....	43.1	12.0	2.5	18.0	5.0
	Matte	17.00	.....	.....	50.3	26.7			
	Slag	0.50	.....	.....	42.5	1.75	3.0	31.0	6.0
Garfield Smelter, Garfield, Utah.	Charge	14.1	4.1	0.12	26.3	12.1	5.6	24.2	
	Matte	42.9	14.5	0.38	28.3	23.6	0.4	1.6	
	Slag	0.39	0.25	0.0016	31.5	0.4	8.7	40.3	6.7
A. S. & R. Co., Hayden, Ariz.	Charge	16.0	1.5	0.005	26.0	25.0	3.9	22.0	6.0
	Matte	38.0	2.8	0.02	34.8	25.3	....	0.5	
	Slag	0.38	0.003	.....	33.5	0.7	5.7	38.6	10.
El Paso Smelter, El Paso, Texas.	Charge	17.1	3.0	0.01	25.0	19.0	4.0	27.3	5.3
	Matte	41.0	6.7	0.03	32.6	24.9	....	0.4	9
	Slag	0 34	0.09	.....	30.3	0.4	5.8	41.9	9.6
Tacoma Smelter, Tacoma, Wash.	Charge	18.2	8.1	0.25	21.7	25.9	3.0	18.8	
	Matte	42.6	43.9	1.25	24.4	22.2			
	Slag	0.40	0.45	0.0045	24.9	0.2	11.9	39.8	7.3
Copper Queen, Douglas, Ariz.	Charge	8.50	2.0	0.02	29.5	12.6	1.6	27.0	7.0
	Matte	30.0	8.0	0.10	37.1	25.2			
	Slag	0.36	0.12	0.001	32.0	0.7	2.5	40.5	10.5
United Verde, Clarkdale, Ariz.	Charge	5.9	2.76	0.93	24.5	8 8	0.9	32.4	7.8
	Matte	32.4	13.25	.....	33.8	25.6			
	Slag	0.37	0.266	0.004	35.3	0.7	2.0	36.6	8.1
International smelter, Miami, Ariz.	Solid charge	23.47	0.96	0.017	22.31	20.4	3.57	14.61	5.10
	Charge and converter slag	19.11	0.78	0 013	28.57	16.6	2.98	15.88	4.66
	Matte	40.91	1.72	0 029	30.83	25.26			
	Slag	0.50	0.03	.....	32.4	.....	6.68	35.35	10.36
Nevada Consolidated, McGill, Nev.	Charge	11.4	0.21	0.7	28.0	7.2	5.6	31.9	7.2
	Matte	48.0	0.84	0.28	24.3	25.4	....	0.1	0.6
	Slag	0.43	0.02	0.002	29.2	0.3	7.3	41.4	9.1
Calumet and Arizona, Douglas, Ariz.	Charge	5.09	1.79	0.067	30.0	10 4	3.3	26.4	4.5
	Matte	22.07	7.77	0.306	45 0	25.3	...	0.9	
	Slag	0.36	0.08	0.002	35 8	1.0	4.0	37.9	6.4
Anaconda Copper Mining Co., Anaconda, Mont.	Charge	9.81	8.71	0.034	26.8	10.1	4.2	24.5	5.6
	Matte	37.72	34.36	0.096	29 9	25.0			
	Slag	0.34	0.17	0.0007	29.9	0.7	6.7	37.9	9.3

120. Products.—The products of the reverberatory furnace are the same as those of the blast furnace, *viz.*, matte, slag, and flue dust. Table LII gives the compositions of the charge, matte, and slag of several plants. It will be noted that there is comparatively little variation in the different mattes and slags.

121. Matte.—The percentage of copper in the matte is governed by the roasting operations and the subsequent reactions which take place between oxides and sulphides in the smelting furnace. This composition is calculated to meet so far as possible the desires of the converter department with due regard to slag losses. It was shown in §102 that these losses are a function of the per cent of copper in the matte (see Tables XLIX and L). All reverberatory mattes contain magnetic oxide of iron but it is still uncertain what function it plays in the equilibrium between matte and slag and the amount of copper carried by the slag. Magnetite sometimes builds up on reverberatory bottoms and it is possible that it is deposited from the matte. The withdrawal of matte from the furnace takes place intermittently as required by the converters. It is tapped from a taphole, which may be located at the flue end of the furnace, as at

Kind and number of burners	.....	.....	6 Steptoe type	6 Steptoe ⅜ in. oil, 3 in. air	6 Steptoe ⅜ in. oil pipe, ½ in. delivery
Volume and pressure of air	.....	.....	3,500 cu. ft. per min. 6 burners. 6 to 8 lb.	13 lb.	600 cu. ft. per min. 12 lb.
Pressure of steam	.....	.....	No steam	No steam	No steam
Size of flue	5½ by 14 ft.	58 to 76 sq. ft.	8 by 10 ft. 10 in.	7 by 12 ft. 5 in.	5 by 15 ft.
Kind and horsepower of waste heat boilers	B. & W. water tube 400 hp.	Sterling S 17,335 hp. Sterling K 19,330 hp. Erie vert. 513 hp.	6 Sterling 350 hp. 3 Erie 500 hp.	Erie vert. 600 hp. 3 per Fce	2 Sterling 512 hp.
Per cent of fuel recovered as steam	(a)	40	32	35	35
Charge per 24 hr., tons:					
Hot calcine	385	523	490	595	690
Cold calcine	10	.....	.....	.....	30
Flue dust	40	18	10	Included in hot calcine	30
Converter slag(b)	70	105	120	148	100
Flux	.....	51	.....	23	None
Fettling ores	73	.....	.....	9	None
Total	578	685	620	775	850
Temperature of hot calcines, ° C.	525	750	650	510	540
Where charged	Side walls	Side. 40 ft. from fire end	Side. 50 ft. from fire end	.....	Along sidewalls
Depth of liquid charge:					
Maximum	30 in.	36 in.	40 in.	43 in.	35 in.
Average	22 in.	27 in.	32 in.	40 in.	25 in.
Total slag per 24 hr., tons	406	480	270	330	450
Total matte per 24 hr., tons	205	205	200	235	300
Draft, inches of H_2O:					
In furnace	¼	0.13	0.10	0.15	0.09
Beyond boilers	1 3/16	0.42	1.2	0.45 to 0.50	0.55
Temperature of gases, ° C.:					
At firing end	1,580	1,480	1,500	1,600	1,500 to 1,650
At flue end	1,100	1,180	1,250	1,200	1,200
Beyond boilers	.....	400	350	370	370
Labor per 8-hr. shift	1 skimmer, 1 helper, 3 feeders	1 foreman, 9 furnacemen, 4 larrymen, 1 feeder, 1 scaleman, 3 slag motormen, 3 switchmen, (the above for 3 furnaces)	1 skimmer, 1 tapper, 1 helper, 1 feeder, 1 laborer, 1 foreman for all furnaces	6 men	4 men on furnace and 2 men hauling slag

TABLE LIII.—REVERBERATORY SMELTING DATA (*Continued*)

	Copper Queen, Douglas, Ariz.	United Verde, Clarkdale, Ariz.	International, Miami, Ariz.	Nevada Consolidated, McGill, Nev.	Calumet & Arizona, Douglas, Ariz.	Anaconda Copper Mining Co., Anaconda, Mont.
Length of hearth	91 ft. 7½ in.	100 ft.	3 at 120 ft. 1 at 119 ft.	134 ft.	4 at 100 ft.	133 ft. 8 in.
Width of hearth:						
Maximum	20 ft. 4 in.	3 at 25 ft. 3 at 19½ ft.	3 at 21 ft. 1 at 25 ft.	1 at 24½ ft. 1 at 27 ft. 2 at 30 ft.	21 ft. 2 in.	23 ft.
Firing end	20 ft. 4 in.	same	19 ft. 23 ft.	same	same	22 ft.
Flue end	11 ft.	same	8½ ft. 12 ft.	14 ft.	11 ft.[d]	23 ft.
Area of hearth, square feet	1,737	3 at 2,500 3 at 1,950	2,312 2,757	2,981 3,317 3,700	2,050	3,073
Thickness of hearth, inches	16 at matte well 24 elsewhere	48	27 in. crushed SiO_2 on poured slag	.....	20	60
Position of slag tap	Flue end 27½ in. from bottom	Flue end	Middle of front end 2 ft. above hearth	Center of flue end	Front center 24 in. above floor	Front end center
Position of matte tap	15 ft. and 32 ft. 4 in. from flue end, 9½ in. above bottom	Side near front	Two holes 27½ and 37½ ft. from bridge wall	1 at 60 ft. from firing end, others 25 ft.	22 ft. from firing end	Below and one side of slag tap
Height of roof above hearth:						
Maximum	10 ft. 4⅝ in.	9½ ft. 12½ ft.	8 ft. 8¾ in. 9 ft. 8 in.	6 ft.	4 ft. 11 in. above slag line	11 ft. 2½ in.
At firing end	10 ft. 4⅝ in.	9 ft. 4 in. 9 ft. 7 in.	same	6 ft.	same	same
At flue end	10 ft. 4⅝ in.	7 ft. 5 in. 9 ft. 7 in.	7 ft. 7 in. 7 ft. 9 in.	5 ft. 3 in.	same	9 ft. 2 in.
Kind of fuel	Crude oil	Coal dust at present	Mexican and California oil	Pulv. coal	Mex. petroleum	Pulv. coal
Fixed carbon in coal, per cent	.....	36.83	.....	53	.....	47.9
Ash in coal, per cent	.....	12.47	.....	8.3	.....	12.4
Calorific power of coal, B.t.u.	.....	10,350 lump 11,279 pulv.		13,450	.....	12,220 (wet.)
Weight coal per ton charge	.....	360 lb.	.....	300 to 400 lb.	.....	300 lb.
Number of burners	.....	5	.....	9 to 11	.....	5
Diameter of burners, inches	.....	9	.....	7	.....	6 to 10
Volume and pressure of air per burner	.....	16 oz.	.....	40 cu. ft. at 10 oz. per lb. coal	.....	15½ oz.
Density of oil, ° Bé	14.5	.....	16.3 and 18.7	.....		
Calorific power, B.t.u.	18,500	.....	18,272 18,498	.....	18,200	
Barrels per ton of charge	0.68	.....	0.74	.....	0.603	
Kind and number of burners	Low pressure air atomizing 2½ in. diameter	.....	7 ext. pipe 2 in. pipe interior oil pipe ¾ in. Tip. 7/32 in.	.....	7 straight pipe burners, 3 in.	
Volume and pressure of air	400 cu. ft. per min. per burner 38 oz.	.....	465 cu. ft. per burner per min. at 11 lb.		13,700 cu. ft. per bbl. oil at 9 lb.	

Pressure of steam	No steam	.....	Steam only in emergency	.....	150 lb. used in emergency	
Size of flue	77 sq. ft.	.....	42 and 52 sq. ft. uptake	5 by 14 ft.	8 ft. 5½ in. wide 9 ft. 6 in. high	9 by 13 ft.
Kind and horsepower of waste heat boilers	Erie vert. 520 hp.	Sterling 700 hp.	7 Sterling 713 hp. 3 Sterling 850 hp.	6 Sterling 400 hp. 5 Sterling 779 hp.	10 Sterling 712 hp.	Sterling 300 hp.
Per cent of fuel recovered as steam	33	35 to 40	38.0	45	40	
Charge per 24 hr., tons:						
Hot calcine	489	550	455	541	654	450
Cold calcine	.....	.....	.....	37[c]	14	None
Flue dust	68	55	10	20	15	40
Converter slag.[b]	156	255	124	52	130	40
Flux	1	.....	30 tons limerock with hot calcines	61	3	2
Fettling ores	2	.....	3	13	12	Incl. in calcine
Total	716	860	600	724	828	562[e]
Temperature of hot calcines,	300 to 550	425	325	480	650	500
Where charged	Along sidewalls 52 ft. from firing end	Sidewalls	Along sidewalls 60 ft. from bridge	Along sidewalls	Sidewalls 25 ft. from burners	Along sidewalls
Depth of liquid charge:						
Maximum	.....	24 to 36 in.	.....	.....	3½ ft.	2 ft.
Average	33 in.	.....	16 in. matte 6 to 8 in. slag	.....	2 ft. 8 in.	1 ft.
Total slag per 24 hr., tons	500	562	264	555	541	350
Total matte per 24 hr., tons	208	102	274	167	159	135
Draft, inches of H_2O:						
In furnace	0.11	0.01	0.09 to 0 120	0.3 to 0.5 at uptake	0.12 at uptake	0.05 to 0.1
Beyond boilers	0.30 to 0.60	1.0	0.60	0.6 to 1.0	0.30	0.36
Temperature of gases, ° C.						
At firing end	.....	.....	1,410	1,540	1,540 45 ft. from burners	1,480
At flue end	1,260	1,200	1,140	1,400	1,100	1,200
Beyond boilers	425	315	300	260 to 425	315	340
Labor per 8-hr. shift	10 men operating only	½ foreman, 1 skimmer, 2 helpers, 1 laborer, 1½ cleaning flues	For 3 furnaces, 1 foreman, 3 skimmers, 6 helpers, 1 slagman, 12 laborers, 2 motormen and switchmen	For 2 furnaces, 1 shift boss, 2 skimmers, 4 helpers, 1 matte pot tender, 1 slagman, 1 charge dumper, 1 water tender, 11 others on day shift only	For 3 furnaces, 20 men	5 men

(a) Boilers used only in winter and only part of cases used then.
(b) In nearly all cases this is added while still molten.
(c) Mixture of secondaries.
(d) Taper starts 13½ ft. from flue end.
(e) 30 tons miscellaneous.

Anaconda, but more usually at some point or points along the side. There are usually two or more tapholes at different levels for use under different conditions of the charge. After tapping, the matte flows through a launder into a ladle which is handled either by a crane or on tracks and carried to the converter department.

122. Slag.—Up to the time of the development of the present system of oil and coal-dust firing with side feeding, the furnace temperatures were rather low, usually between 1,100 and 1,200° C. With this heat and the charges used it was impossible to obtain a slag sufficiently fluid to flow readily from the furnace. The regular practice was, therefore, to skim the slag through doors placed along the sides of the furnace. These slags often contained unsettled matte, ore dust, and undecomposed masses of ore, causing them to run high in copper. Under present conditions the furnace temperatures are usually 1,200 to 1,400° C. which is ample to maintain the slag in a fluid condition so it can be tapped as readily as a blast-furnace slag. Modern reverberatory slags differ little from blast-furnace slags, but run slightly higher in copper, due possibly to the better reducing conditions obtained in the blast furnace, but the continual shower of ore dust settling on its surface undoubtedly has some effect. At the flue end of the reverberatory furnace there is a comparatively large area where no actual smelting is done, but it is designed to allow a complete settling of the matte from the slag. The withdrawal of slag is therefore at the end of the furnace, where it flows continuously into slag cars or granulating troughs. As in the case of blast-furnace slag, considerable thought has been given toward reducing the copper losses in the slag, but no commercial method has yet been perfected.

123. Flue Dust and Gases.—The gases, on leaving the reverberatory furnace in practically all installations, pass through waste-heat boilers where their temperature is reduced from about 1,200 to about 400° C. and 35 to 40 per cent of the heat in the coal used recovered in the form of steam. A large quantity of dust settles in the boilers, which must be provided with suitable cleaning doors so as to allow frequent removal of this dust. After passing through the boilers the gases enter the flue system of the plant where the dust and fume may be further recovered. This is discussed more fully on page 229.

124. Production of Metallic Copper from Matte by Smelting in the Reverberatory Furnace.—The processes for carrying out this operation preceded the introduction of the converter. The operations are of interesting metallurgical significance and they occupy an important place in metallurgical history but are obsolete today. They have been discussed in the previous edition of this book but are omitted in the present revision.

125. Reverberatory Furnace Table.—Some data on modern reverberatory practice are given in Table LIII. These give interesting comparisons of operations under different conditions and need no comment.

126. Draft Regulation in Reverberatories.—Jones and Wraith, at Anaconda[1] made an extensive study of draft conditions in the reverberatory furnaces with

[1] Private communication.

a view of getting a better fuel ratio together with more uniform operation. Figure 145 shows the fluctuations which prevailed in the furnace draft during a normal day. With uniform supply of fuel (powdered coal) it was found that the fluctuations in draft caused the gases to contain at times an excess of oxygen and at other times an excess of CO. This was due to the fact that, in addition to the fixed amount of air furnished with the fuel, some further air is always drawn in through cracks, charge openings, etc. With low draft there was insufficient secondary air drawn in to complete combustion, with high draft

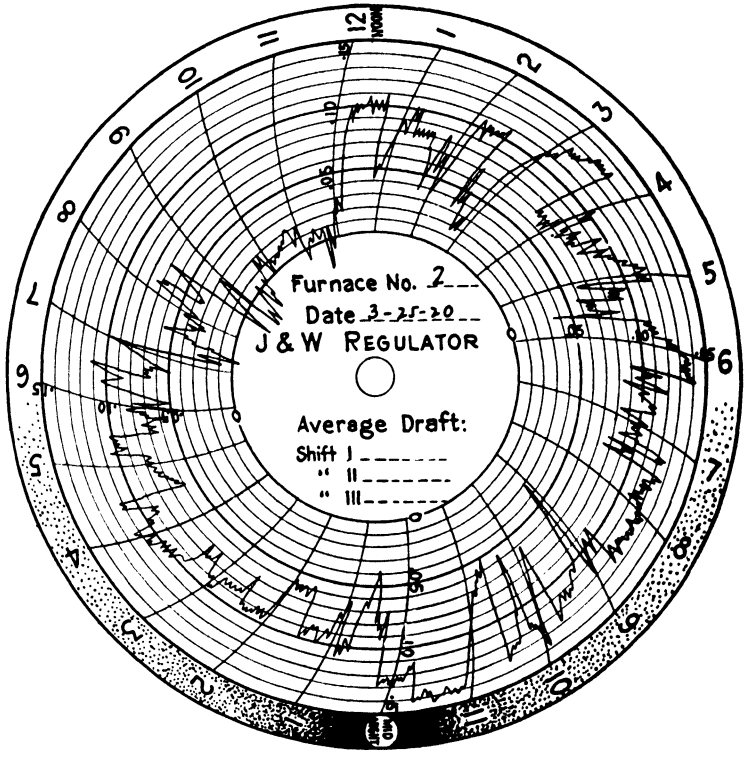

FIG. 145.—Fluctuation of reverberatory draft at Anaconda, without regulator.

there was too much. It is evident that unless the draft is controlled it will vary greatly in different furnaces, depending on their distance from the main flue and the number of openings through which air can be drawn in.

By controlling the draft the following improvements were noted:

1. The amount of cuprous material smelted with fuel constant was increased 44 per cent, or from 5.6 to 8.06 tons per ton of coal.

2. A more uniform matte flow was obtained.

3. The steam generation in the boiler, which formerly fluctuated greatly depending on the presence of CO or O in the gases, became uniform and consequently more satisfactory.

4. The dust under the boilers and in the culverts, which was formerly in a semi-fused condition and difficult to remove, became pulverulent and more easily handled.

5. General operating conditions were more uniform and more satisfactory.

As a result of the experiments an automatic regulator was devised which operates the dampers to give any draft desired. Perfect combustion is obtained by regulating one of the three variables, fuel, air admitted with the fuel, and draft. Once these are regulated to give furnace gases with no free CO or O present, the conditions will be maintained by the draft regulator, assuming, of course, that the openings in the furnace remain substantially the same.

The operation of the regulator is very simple and may be understood in principle by Fig. 146. A T-shaped piece of metal is suspended from a pivot *a*. From one arm of the T is suspended a cylinder *b* closed at the top, with the open

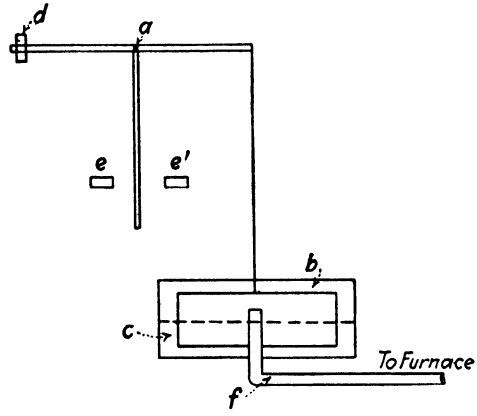

FIG. 146.—Principle of Jones and Wraith draft gauge.

end dipping into a bath of oil *c*. The cylinder is balanced by a counterweight *d*. The lower part of the T is normally in a vertical position midway between two electrical contacts *e*, *e'*. A pipe *f* leading from the furnace chamber enters the bottom of the oil receptacle and terminates inside the cylinder above the surface of the oil. It will be readily seen that variations in draft will cause the hollow cylinder to move up or down. The apparatus is adjusted to the draft desired, then an increase in draft will cause the lowering of the cylinder and the contact of the lower part of the T with *e*. This closes an electrical circuit which operates a switch controlling a motor which closes somewhat a damper in the furnace flue, thus lowering the draft in the furnace until equilibrium is reached. Conversely, a decrease in draft will close a circuit at *e'* and bring about an opening of the dampers.

Figure 147 gives a more complete diagram of the apparatus and electrical connections and Fig. 148 shows a record card illustrating the close control which can be obtained.

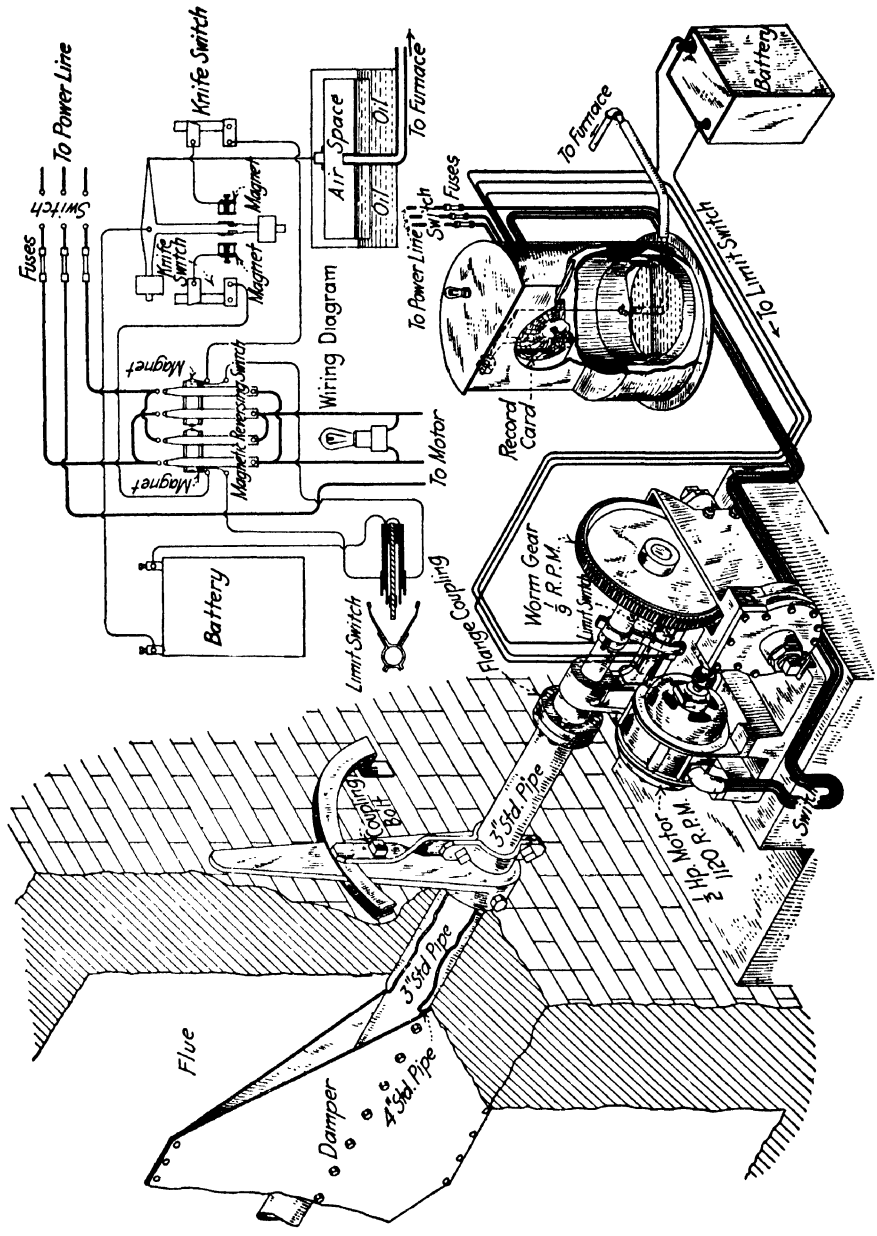

FIG. 147.—Jones and Wraith draft gauge.

The control mechanism may be at any reasonable distance from the furnace and is conveniently located in the department office. Attached to it is an electric light which flashes when contacts are made and gives visual evidence of the way the furnaces are operating.

At Anaconda the regulator is attached to the Cottrell flues and the arsenic furnaces as well as to the reverberatories.

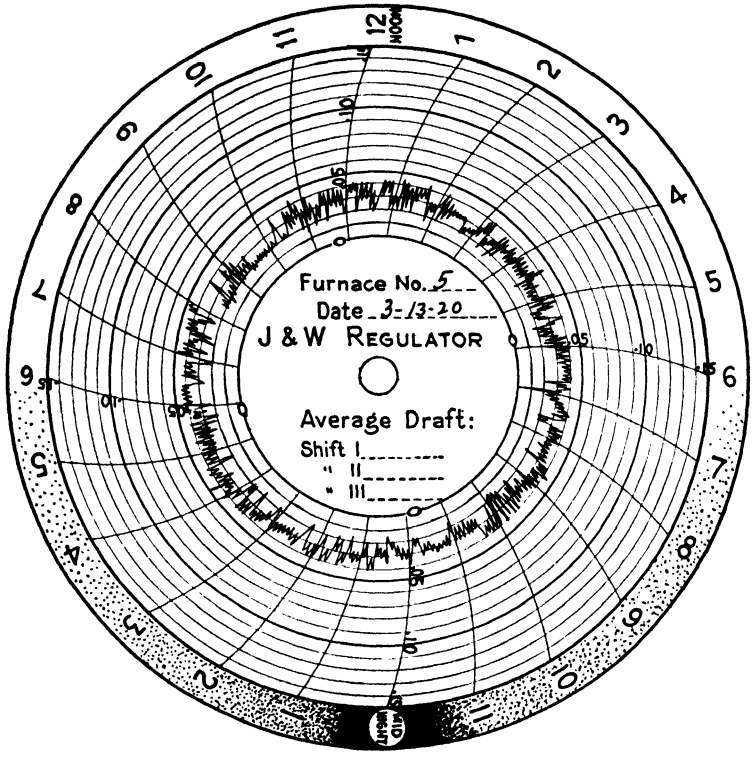

FIG. 148.—Fluctuation of reverberatory draft at Anaconda under Jones and Wraith control.

IV. SMELTING IN THE CONVERTER

127. Converting Copper Matte in General.[1]—In the converting process, air in thin streams is forced through Cu-Fe matte held in a refractory vessel at 1,150 to 1,200° C., Fe is oxidized to FeO and combines with SiO_2 forming a slag;

[1] DOUGLAS, *Trans. Mining Met.*, 1899–1900, XIII, 2; JANNETAZ, P., "Les Convertisseurs pour Cuivre," Baudry, Paris, 1902; KROUPA, *Oesterr, Z. Berg. Hüttenw.*, 1903, LI, 695, 715; MAYR, F., "Das Bessemern von Kupfersteinen," Craz and Gerlach, Freiberg, 1906; STICHT, R. C., "Progress in Rapid Oxidation Processes Applied to Copper Smelting," Australian Assoc. Adv. Sciences, Jan., 1907; HIXON, H. W., "Notes on Lead and Copper Smelting," McGraw-Hill Book Co., Inc., New York, 1908; PETERS, E. D., "Principles of Copper Smelting," "Practice of Copper Smelting," McGraw-Hill Book Co., Inc., 1907 and 1911.

S forms SO_2 and passes off; and Cu is set free to be cast into suitable forms; the oxidation of Fe and S, and the union of FeO and SiO_2 furnish the necessary heat.

The first attempt at enriching matte by a pneumatic process was that of A. Rath in 1866,[1] who at Ducktown, Tenn., forced air through matte to oxidize Fe and S, and continued the process until 1875. In 1867 Semenikow of the Bogoslowsk mines, Ural Mountains, proposed making blister copper in a converter; the working tests were carried out by Jossa and Laletin who published their results in the *Russian Mining Magazine* of May, 1870.[2] They succeeded in bringing forward coarse metal (Cu 31 per cent) to white metal Cu 72 to 80 per cent), but failed to produce blister copper.

Converting lay practically dormant until Manhès and David in 1880 at Eguilles, France, succeeded in obtaining blister copper.[3] In 1883–1884 their process was introduced at the works of the Parrott Silver & Copper Co., of Butte, Mont.[4] The original mode of procedure, of blowing in two separate stages, melting matte with Cu 35 per cent and blowing to 80 per cent, followed by casting and remelting the white metal and blowing to blister copper, was retained until 1885,[5] when A. J. Schumacher laid the foundation of the modern practice of starting with matte of 40 to 50 per cent Cu and blowing to blister copper in two consecutive stages without any remelting of white metal. The last improvement was the working of direct matte instead of cupola matte, the matte being tapped from the blast-furnace settler or the reverberatory hearth either into a ladle and poured into the converter, or made to flow direct into it (now abandoned). This method was planned in 1890–1891 by C. O. Parsons for Great Falls, Mont., and carried out there in 1892 by F. Klepetko.[6]

So far the converter had always been lined with siliceous material, which furnishes the SiO_2 necessary to slag the FeO. About 1888 Claude Vautin experimented with a basic lining at Cobar, Australia, but gave up the attempt. In 1890 Keller[7] made unsuccessful attempts at the Parrott smeltery in Butte at converting matte in a vessel lined with magnesite. Others did the same at the old Anaconda and the Boston and Montana works. Later Westinghouse[8] experimented first at Pittsburgh, Pa., and later at Ely, Vt., with a basic lining for pyritic smelting; Baggaley[9] worked in 1903 along similar lines and with converting at the Pittsmont smelter, Butte, Mont., but did not succeed entirely with his ideas. The work at the plant of the U. S. Smelting Co. at Midvale, Utah, met with a similar result.

[1] U. S. Pat. 57376, Aug. 21, 1866; *Eng. Mining J.*, 1879, XXVII, 260, 1883, XXXV, 250.

[2] *Berg, Hüttenm, Z.*, 1871, XXX, 7, 17, 57.

[3] GRÜNER, *Bull. soc. d'Enc.*, 1882, IX, 439; *Ann. mines*, 1883, III, 429; *Bull soc. ind. min.*, 1885, XIV, 607.

[4] REPATH, *Mining Sci. Press*, 1902, LXXXV, 144.

[5] HOFMAN, *Trans. A. I. M. E.*, 1904, XXXIV, 261.

[6] HOFMAN, *loc. cit.*

[7] PETERS, "Modern Copper Smelting," 1895, p. 510; MATHEWSON, *Trans. A. I. M. E.*, 1913, XLVI, 469; KELLER, *Trans. A. I. M. E.*, 1913, XLVI, 474.

[8] *Metallurgie*, 1904, I, 346.

[9] HEYWOOD, *Eng. Mining J.*, 1906, LXXXI, 574; *Mining Sci. Press*, 1906, XCII, 281; BAGGALEY, *Bull.* 83, *A. I. M. E.*, Nov., 1913, p. 2677.

The first successful converting in a vessel lined with basic, or rather neutral, material, was that of Peirce and Smith in 1909, at Baltimore.[1] The pneumatic treatment of matte in a converter with a neutral lining, the SiO_2 necessary being furnished by the addition of acid ore, has so many advantages over the original acid process that it has replaced the latter.

Matte converters[2] have this in common, that they are side-blown and not bottom-blown as is the case with all large steel converters. They are usually classed as *upright*[3] and *horizontal*. In his first attempt at converting, Manhès used a pear-shaped bottom-blown upright vessel with a capacity of 440 lb. matte. At the beginning of a blow everything went smoothly; toward the end the slag thickened from having been overblown and was ejected in part; metallic copper solidified, having been cooled by air passing through it, and choked the vertical tuyère openings in the bottom. He therefore placed the tuyères in the side a short distance above the bottom lining, and thereby furnished a space beneath them in which the metallic copper formed would be out of reach of the blast, could settle, and be poured off later with the slag.[4]

(*a*) Converting in a Vessel with Acid Lining

128. The Converter.—The acid-lined converter has been entirely superseded by the basic-lined vessel, but the fundamental operations of the two processes are the same. The transformation brought about by the introduction of basic linings will be better understood if a brief description of acid practice is included in the present volume. For a more detailed description of the process and apparatus, reference may be made to the previous edition of this work.

Table LIV, giving dimensions and operating data on acid converters, is retained in order to furnish a comparison with modern basic practice given in Table LV.

129. The Upright Converter.—The leading data of the original converter of Eguilles are given in Table LIV. The original Parrott converter of 1894[5] was a copy of that of Eguilles; its general form and the details of construction were changed to meet the new conditions. Dimensions and working results are given in Table LIV. The old Anaconda converter[6] and the plant are described by Hixon.[7]

[1] U. S. Pats. 942346 and 942661, Dec. 7, 1909; 942973 and 943280, Dec. 14, 1909; VAIL, *Eng. Mining J.*, 1910, LXXXIX, 563; Editor, *op. cit.*, 1914, XCVII, 720.

[2] CHRISTENSEN, *Mining World*, 1910, XXXIII, 1036.

[3] WHEELER and KREJCI, *Trans. A. I. M. E.*, 1913, XLVI.

[4] Experiments at Great Falls, Mont. (HOFMAN, *Trans. A. I. M. E.*, 1904, XXXIV, 304; WHEELER and KREJCI, *loc. cit.*) with an upright converter (13 ft. high and 9 ft. in diameter, an initial charge of 50 tons of 50 per cent matte) were satisfactory as far as the bringing forward to blister copper was concerned which remained sufficiently fluid to permit pouring; they were not followed up, as the life of the bottom was too short. The difference in the two cases is due to the small amount of charge treated by Manhés, which was chilled, and to the fact that his slag was not skimmed and hence was overblown, causing some FeO to be changed into Fe_3O_4, infusible at converter temperature.

[5] PETERS, "Modern Copper Smelting," 1895, p. 529.

[6] STICKNEY, *Eng. Mining J.*, 1893, LV, 370; 392, 417; *Mineral Ind.*, 1892, I, 151.

[7] "Notes on Copper and Lead Smelting," 1908, p. 95.

The Great Falls converter of 1904 (Figs. 149–151), which was similar to the Aguas Calientes type, consisted of an upright cylindrical boiler-iron shell *A* with refractory lining *b* supported from a cast-iron trunnion ring *c* by a pair of trunnions *d* in such a way as to permit swinging in a vertical plane for the reception of matte and the discharge of slag and blister copper on one side;

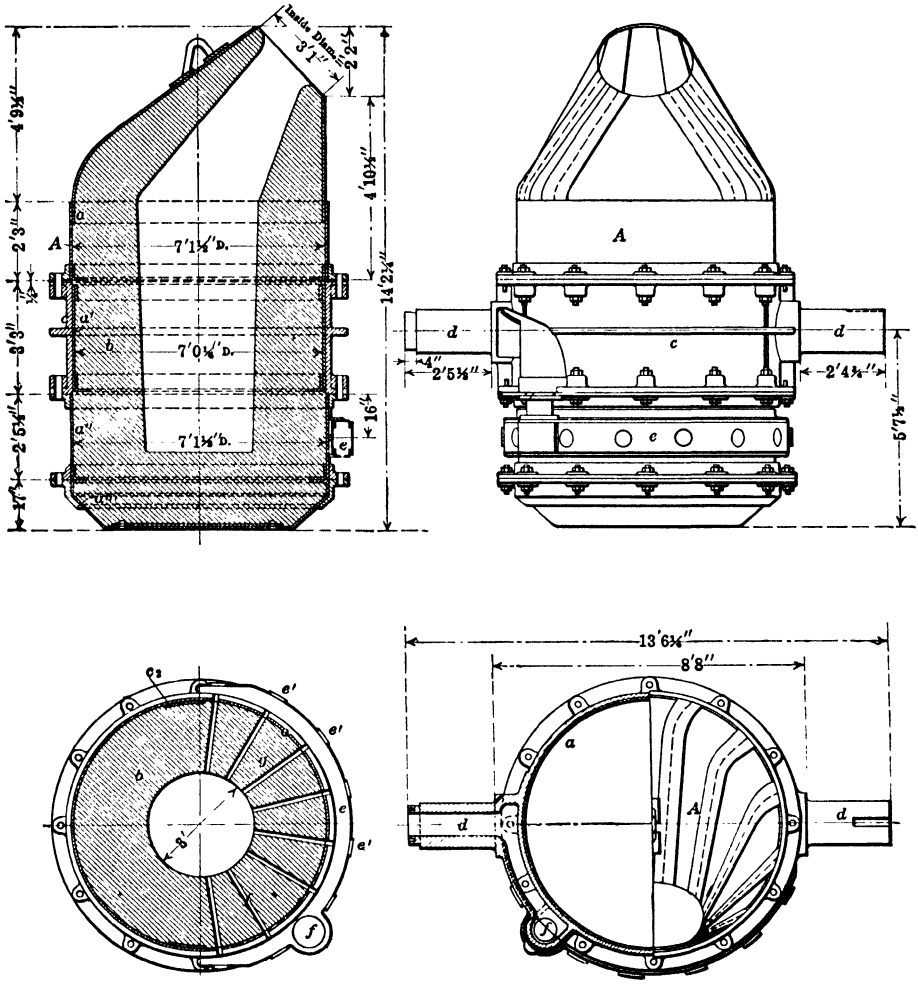

FIGS. 149–151.—Upright converter of Great Falls, 1892–1904.

on the opposite is the air box *e*, receiving the blast through pipe *f*, and delivering it to the interior through tuyère openings *g* traversing the lining. The shell *A* is made up of four parts: the upper, *a*, forming the hood or head, carries at the lower end a cast-iron collar which serves for bolting it to the trunnion ring that encloses the middle part, *a'*, of the shell; the lower part, *a''*, is similarly connected above to the trunnion ring and below to the bottom part, *a'''*. Air

box *e* has opposite each tuyère an opening *e'*, closed by a valve, to permit punching the tuyères. The peculiar form of the cavity is due to the uneven wear of the lining in converting.

The converter was 7.5 ft. in diameter and 14 ft. 2¼ in. high, had a cylindrical body 8 ft. high, a cavity which takes an initial charge of 5 tons of 50 per cent matte and a final charge of 10 tons. The leading changes that have been made since then are assembled in Table LIV.[1] The body was first lengthened and made elliptical;[2] this cross-section was retained and the length of the body further increased to 12 ft.; the elliptical cross-section had to give way again to the circular, while the increased length was retained, making the converter 12 ft. high and 12 ft. in diameter. The lining, made of ore, was especially thick, so that the initial charge was only 8,500 lb. of 40- to 50-per cent matte, while the final charge reached 18,500 lb. This shell was subsequently used with basic lining.

130. Horizontal (David-Manhès, Leghorn, Trough, Barrel) Converter.—In 1883 David and Manhès constructed at Eguilles this second form of con-

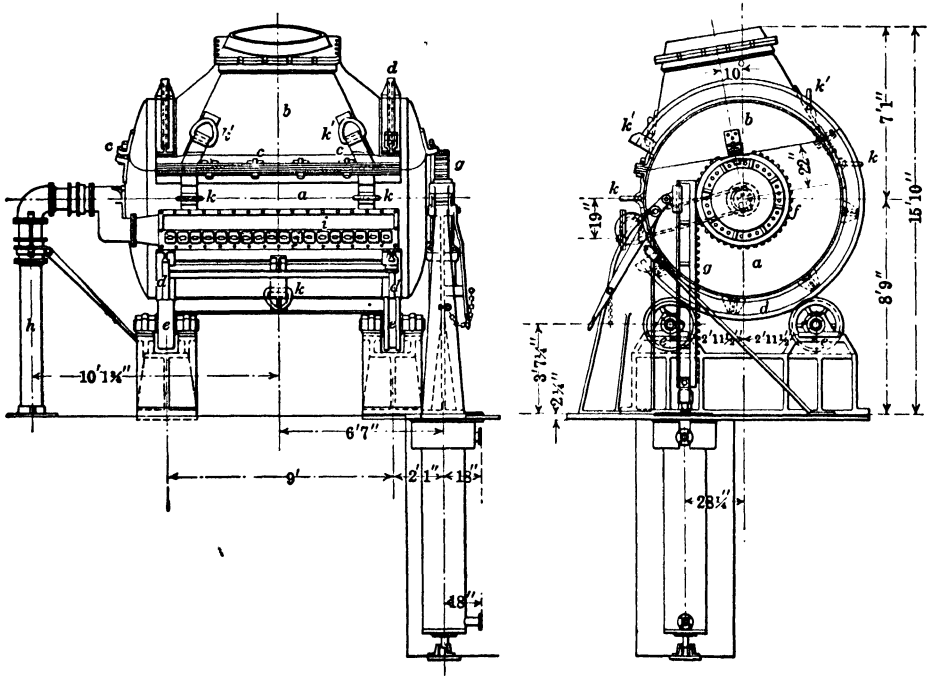

FIGS. 152–153.—Horizontal converter of Anaconda.

verter, a horizontal cylindrical vessel, with lateral tuyères, resting and revolving in a horizontal plane on rollers. This has become the prototype of many modern converters. It was soon introduced at Leghorn, Italy; in 1891 it was in

[1] A complete discussion with drawings is furnished by WHEELER and KREJCI, *loc. cit.*
[2] Elliptical converter; *Eng. Mining J.*, 1906; LXXXI, 92.

operation at Jeres Lanteira, Spain.[1] The leading facts are given in Table LIV. The first horizontal converter in the United States for treating copper matte was that of the Copper Queen smelter.[2] This converter was larger than the others. Details are given in Table LIV, as are the dimensions and working results of some of the leading acid converters of the United States in operation in 1911. The history of American converters has been outlined by Christensen.[3]

The Anaconda converter of 1911,[4] (Figs. 152–153) may serve as an example of this type. The boiler-iron shell, 12.5 ft. long and 8 ft. in diameter, consisted of two parts, the barrel *a*, and the hood *b* (sometimes of cast steel), which are joined by key bolts *c*. The barrel rests with rail-shaped runners *d* upon two pairs of friction rollers *e*, and is rotated at one end by a pinion *f* and vertical rack *g*, operated by hydraulic power under a pressure of 400 lb. per square inch. At the other end is the blast-inlet pipe *h*, delivering air under a pressure of 15 lb. to the air box; whence it passes through 18 tuyères, *j*, provided with Dyblie ball valves, into the cavity. Barrel and hood are provided with hooks *k* and *k'* for raising by means of an overhead crane and transferring to the place for lining.[5]

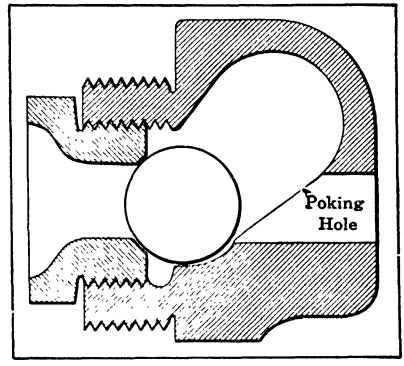

FIG. 154.—Dyblie tuyère-valve.

With later converters, *e.g.*, the Balaklala[6] (Table LIV), the sides of the body were tangential to the cylindrical bottom. This gave a high horizontal parting line between body and hood, lying above the riding rings.

With most converters the individual tuyère is provided with a Dyblie valve (Fig. 154), which closes the poking hole in the air box opposite the tuyère. Each tuyère is usually attached to the wind box with nipples and unions having brass seats; its discharge end projects several inches into the shell and is screwed to the shell through a cast-steel stuffing box.[7]

131. The Lining.—The essential requirements of an acid lining are that it shall contain the largest possible amount of uncombined SiO_2 that is consistent with its being mechanically strong. Free SiO_2 is essential for the union with FeO as soon as formed; a clayey bond is equally necessary to hold together the particles of SiO_2. At first great stress was laid upon the refractoriness of the lining. Thus quartzite, crushed to pea size, was mixed in an edge-roller pan with about 15 per cent fire clay for the body, and with about 20 per cent for

[1] MASSIA, *Eng. Mining J.*, 1891, LII, 307.

[2] DOUGLAS, *Trans. Inst. Mining Met.*, 1899–90, VIII, 2; *Trans. A. I. M. E.*, 1899, XXIX, 538.

[3] *Mining World*, 1910, XXXIII, 1036.

[4] HOFMAN, *Trans. A. I. M. E.*, 1904, XXXIV, 302; AUSTIN, *op. cit.*, 1906, XXXVII, 474; OFFERHAUS, *Eng. Mining J.*, 1908, LXXXVI, 747.

[5] SHELBY'S hook for crown; *Eng. Mining J.*, 1907, LXXXIV, 211.

[6] *Mining World*, 1910, XXXIII, 1037.

[7] SHELBY, *Eng. Mining J.*, 1907, LXXXIII, 854.

TABLE LIV.—ACID

	Upright					
	Manhès, Eguilles, 1880	Parrot Copper and Silver Min. Co.	Boston & Montana, Great Falls			Aguas Calientes
Cylinder, height outside	7′ 6″	8′ 6″	8′ 9″	12′	12′	16′
Cylinder, diameter outside	4′ 8″	5′	front-back 9′9,″width trunnion 8′ 9″	front-back 10,′ width trunnion 10′	12′	8′ 1¾″
Bottom, height outside	.....	.....	7′ 8″	7′ 8″	7′ 8″	
Throat, diameter	¾′	2′ 5″	3′ 4½″	3′ 4½″	3′ 4½″	3′
Shell cylinder, thickness	.....	5/16″	½″	½″	½″	⅞″
Shell head, thickness	.....	½″	½″	½″	½″	½″
Lining, character	Quartz & clay	Quartz & clay	Ore	Ore	Ore	Siliceous ore & clay
Lining, thickness at bottom	12″	18″	33″	30″	30″	23″
Lining, thickness at tuyères	10″	18″	39″	55″	65″	31½″
Lining, thickness opposite tuyères	10″	18″	25″	22″	16″	31½″
Lining, thickness at hood, tuyère side	5¾″	12″	27″	37″	37″	21″
Lining, thickness at hood, opposite tuyère side	5¾″	12″	34″	38″	38″	21″
Tuyères, number of	18	16″	12	15	15	12
Tuyères, diameter	0.5″ & 0.6″	¾″	1″	1″	1″	2″
Tuyères, height above bottom lining	6″	6″	2½″	5½″	5½″	7″
Charge, first, pounds	2,000	2,500	6,500	8,500	8,500	5,000 -11,000
Charge, last before repairing, pounds	.....	9,000	11,500	18,500	18,500	33,000 -66,000
Blow, duration, minute	25–30	80	170	170	170	90–125
Blows, number in 24 hr	16	14	7	7	7	4
Blast, pressure, pounds per square inch	12–20	11	16	16	16	13½–13¾
Grade of matte blown, per cent Cu	33	45	40–50	40–50	40–50	38–42
Charges, number per lining	7–8	9	5	6	6	3
Tons copper per lining	.....	8	22	36	40	13.5
Men, per shift	.....	.....	Converting 2, accessory 2½	Converting 2, accessory 2½	Converting 2, accessory 2½	18
Number of stands	6	3	12	12	12	.....
Number of shells	.....	7	.....	.....	.....	.....

CONVERTERS

Horizontal								
Manhès-David, Jeres Lanteira	Copper Queen	Balaklala Con. Copper Co.	Tennessee Copper Co.	Shannon Copper Co.	Granby Con. Min. Smelt. Power Co.	Mammoth Copper Min. Co.	British Columbia Copper Co.	Anaconda Copper Min. Co.
4′ 3″ 4′ 2″	8′ 5′ 8″	8′ 4″ 8′	10′ 6″ 7′	10′ 6″ 7′ 6″	10′ 6″ 7′	7′ 3″ 8′	10′ 6″ 7′	12′ 6″ 8′
1′ 10″ ¾″	2′ 7/16″	4′ ¾″ plate	3′ 7′ ¾″	2′ 6″ ¾″	4′ ¾″	3′ 10″ 11/16″	2′ 10″ ⅝″	3′ 9″ ¾″
¾″	⅞″	1¼″ cast	⅞″	1–3″ cast	¾″	1 & 1½″ cast	½″	¾″
Quartz & clay	Quartz & clay	Brick, 1 clay: 5–7 quartz; lining 2 clay: 3 quartz	Fire-brick and silice-ous copper ore	2 siliceous ore: 1 fine concentrates	Siliceous gold-copper ore	Siliceous ore	7 siliceous gold ore (80% SiO_2) : 1 clay	Siliceous ore, 2d class ore, conc. slime
12 (?)	10″	2′	4″ brick 17″ ore	9″	24″	21¾″	18″	25″
12 (?)	10″	2′ 3″	5″ brick 20½″ ore	24″	24″	26″	27″	31″
12 (?)	10″	2′	4″ brick 19″ ore	18″	18″	26″	20″	31″
5 (?) 5 (?)	4″ 4″	15″–18″ 15″–18″	22″ ore 20″ ore	32″ 36″	18″ 14″	20″ 20″	24″ 17″	31″ 31″
11 ⅛	11	16 in. use 14 ¾″	10 1¼″	14 1¼″	14 1¾″	16 1″	14 1⅛″	16 ⅞″
.....	.....	3″–4″	6″	6″	6″	4¾″	8″	6″
2,000	7,000	5,000	3–4 charges of 5,000 lb. to white metal and this to blister copper	18,000 –20,000	8,000	9,000	7,000	12,000
.....	.....	10,000		20,000 –24,000	16,000	20,000	10,000 –14,000	17,000
20–40	90	40–50	400	200–250	90	45–55	120 & 135	135
16 (?)	12	7–9	3½–4	6–7	12	13 & 18	6	9
7½	5⅛	10–15	10	12	9⅛	13	8–10	16
20–25	51	28	33–35	45	40	20 & 37	40 & 50	44
16 (?)	.....	2–3	3–4	3	3	2 & 3.7	3, 40% Cu 4, 50% Cu 5, 60% Cu	5¼ with siliceous ore, 4¼ with 2d class ore
.....	.....	11–12	4.27	15	7.5	13.47 & 27	12, 40% Cu 16, 50% Cu 20, 60% Cu	18.8 with siliceous ore, 15.63 with 2d class
.....	.....	Converting 9, lining 7	19	Converting 7, relining 5	15	15	6 & 6	
.....	.....	2	4	2	3	2	2	12–14
.....	.....	.....	15	6	10	.....	.....	36

the hood, the relative amounts varying with the plasticity of the clay. Later, in order to cheapen the mixture, non-refractory clays were substituted, and often proved to be as satisfactory as the refractory.

The first to employ an ore containing metallic values was Hixon, who in the nineties at Aguas Calientes employed as lining silver ore from Pachuca, which contained the necessary free SiO_2 and bonding clay substance. The ore lining was smelted without cost. His example was followed by others, low-grade siliceous copper ores were substituted for quartzite, and concentrator slimes having binding power for clay. The lining thus obtained is neither chemically nor mechanically as desirable as a quartz-clay mixture; but, as it is smelted for nothing, the final return was so much greater that this mode of procedure became the common practice wherever it is at all practicable.

(b) Converting in Vessel with Basic Lining

132. Basic Converting in General.—The necessity for frequent renewal of the lining in the ordinary acid converter was the cause of experiments with a lining which is not attacked chemically by the process. The best lining so far has been one of magnesite brick; and this has given the new apparatus the name of Basic Converter, although the basic character of the lining has nothing to do with the process, because it remains unchanged. The SiO_2 necessary for slagging the FeO is supplied by the siliceous ore charged. The early working tests with a really basic process by Keller[1] and Westinghouse (page 203), as well as the laboratory experiments by Schreyer[2] and Styri,[3] have proved the futility of trying to work without SiO_2. Pyritic smelting in a converter lined with magnesite by Knudsen and the partially successful work of Baggaley[4] have already been mentioned.

The use of an inactive lining in the form of magnesite brick in a barrel-shaped vessel for converting copper matte, with the addition of SiO_2 to slag the FeO formed, was carried to a successful end by W. H. Peirce and E. A. C. Smith at the works of the Baltimore Copper Smelting and Rolling Co., and the result is the Peirce-Smith Basic Converter, which is the outcome of work extending over several years.[5] The process has been so eminently successful that it has replaced acid converting and will continue to do this unless it meets special conditions, such as occur in localities where a high smelting charge can be obtained for siliceous ore better suited for a lining than for charging into the converter, which make it more profitable to use an acid lining.

The main advantages of the basic over the acid converter are:[6] the decreased cost of lining (one basic lining for 2,500 tons of Cu *vs.* one acid for 10 tons); the

[1] Page 203, and *Trans. A. I. M. E.*, 1913, XLVI, 474.

[2] *Metallurgie*, 1909, VI, 190.

[3] *Op. cit.*, 1912, IX, 426, 449.

[4] Page 203, *Trans. A. I. M. E.*, 1913, XLVI, 480.

[5] Editor, *Eng. Mining J.*, 1911, XCI, 944; *Peirce-Smith Converter Co. vs. United Verde Copper Co.*, U. S. Dist. Court, Dist. Delaware No. 377, in equity.

[6] MOORE, *Eng. Mining J.*, 1910, XXXIX, 319; MATHEWSON, *Trans. A. I. M. E.*, 1913, XLVI, 473.

greater air efficiency (75 *vs.* 60 per cent), on account of the use of a metal tuyère pipe; the use of larger vessels (40 tons Cu *vs.* 20 tons), accompanied by economies in labor, power (one-half), and repairs; the use of low-grade matte and of siliceous ore with SiO_2 35 + per cent; the small amount of intermediary product to be re-treated (per ton Cu: 1.6 tons of slag with 1.5 per cent Cu *vs.* 2.4 tons with 6 per cent), and the consequent large direct output of blister copper (95 *vs.* 70); the formation of basic slag to serve as flux in the smelting furnace; the neatness and cleanliness of plant; and the decrease in danger from accident and dust.

The disadvantages are: blowing out of fines; time required for repairing and lining; care in manipulation; continual punching of tuyères.

Shortly after the Peirce-Smith converter had proved to be a success at Garfield (early in 1910), the Anaconda Company lined its horizontal converters with magnesite and proved that success was not confined to the details of the Peirce-Smith vessel; the same was done at Great Falls (first attempt 1897, second 1901, chrome brick 1906, use of magnesite 1911) with the upright converter.

Basic converting will be discussed in connection with the two forms of converters which have become typical for the present practice: the Peirce-Smith and the Great Falls.

133. The Peirce-Smith Converter.—The 13 by 30-ft. converter[1] consists (Figs. 155 and 155*a*) of a horizontal cylindrical shell of steel plate, supported by two cast-steel riding rings 8 ft. from each end, revolving on four sets of carrying rollers, each set comprising two rollers, with faces bearing on the riding ring and a cradle support in a cast-iron foundation plate. The heads of the cylinders are made of steel plate, flanged to telescope into the shell, and are held in place by I-beams. The converter has 41 1¾-in. tuyères placed at 6½-in. centers and is built with or without removable tuyère plates. The arrangement of the brick in the lining is clearly seen in Fig. 156.

The converter is tilted by an electric motor turning a shaft and pinion meshed in a girth gear riveted to the converter shell, allowing the vessel to turn 360 deg. The converter stack is at a point halfway between the riding rings. It is an opening with axes 6 by 6 ft., having curved front and back but straight sides.

The Tacoma hood, which was devised to prevent so far as possible the dilution of the converter gases by air, is shown in Fig. 155, together with the arrangement for opening the door through which scrap, etc. may be introduced. By preventing undue dilution of the gases, they become available for producing acid or liquid SO_2.

The daily capacity of the converter usually varies from 110 to 125 tons of blister copper while converting a 40 per cent matte.

The converter is made in various sizes to meet the operating conditions in the different plants. The largest size in use is the 13 by 33-ft. vessel at El Paso, Tex. Some of the earlier converters had the stack near one end instead of at the center, but the recent constructions have been as shown in the illustrations. A recent installation at the plant of the Cerro de Pasco Co. in Peru consists of

[1] *Eng. Mining J.*, 1917, CIV, 674.

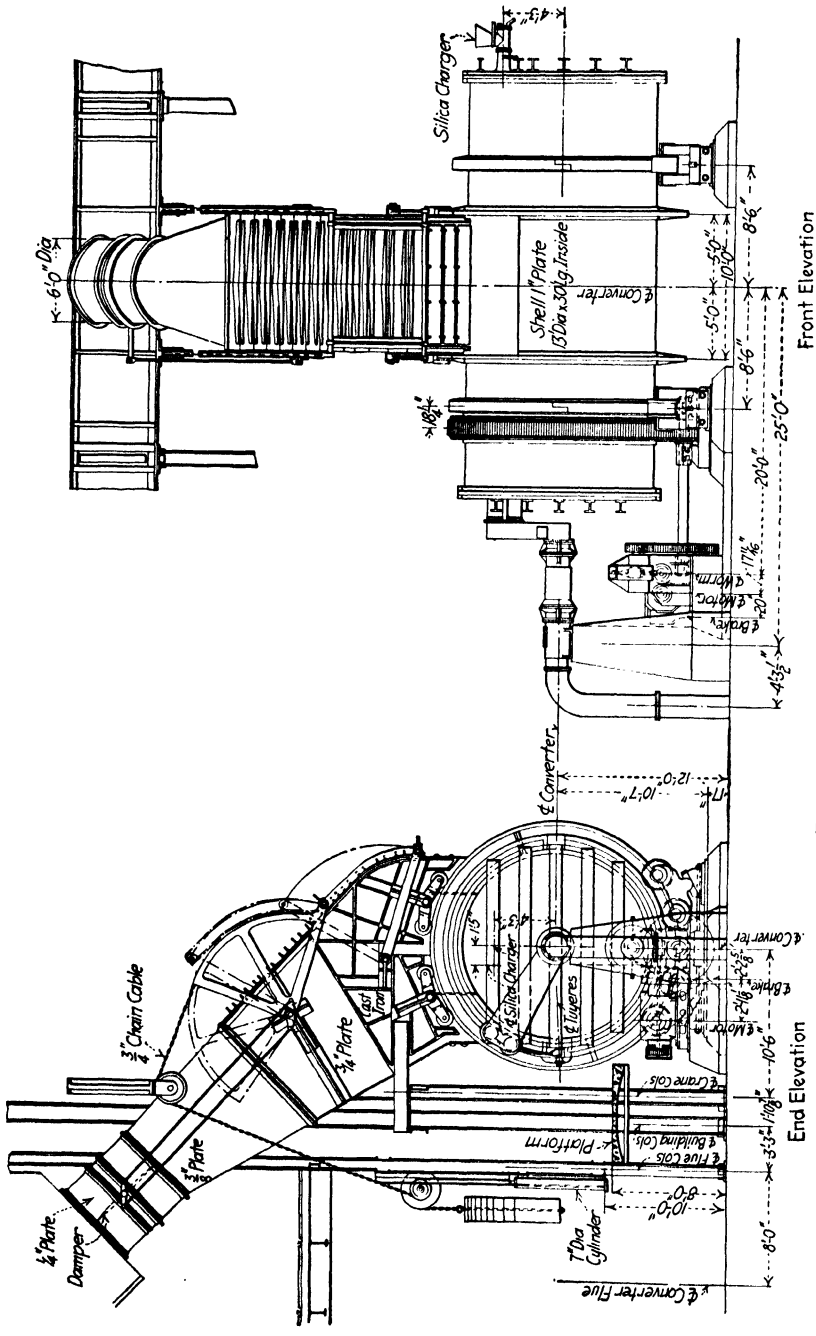

FIG. 155.—Peirce-Smith converter.

five converters 12 ft. in diameter and 20 ft. long. There is more flexibility of operation when smaller converters are used. Small lots of blister copper produced at relatively short intervals can be cast directly from the ladles, whereas

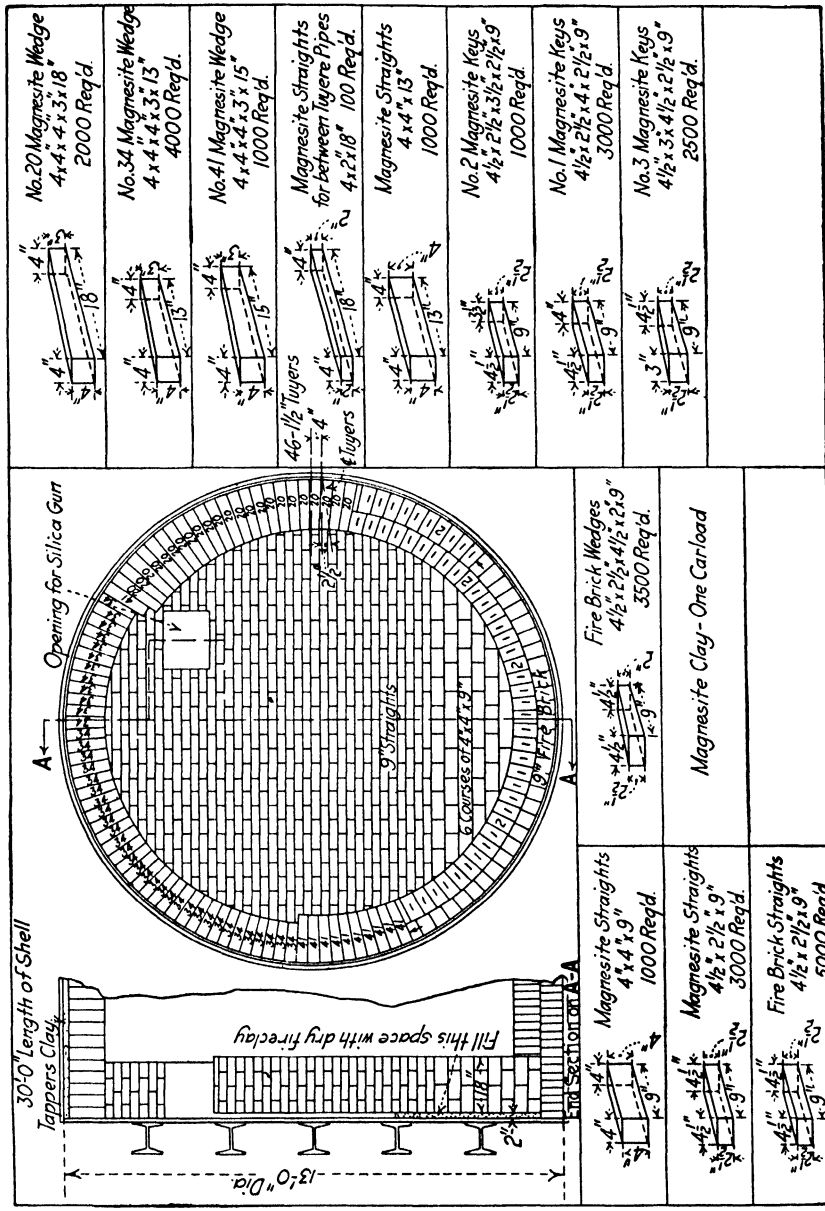

FIG. 156.—Section of Peirce-Smith converter showing lining.

the product from one of the large vessels must usually be transferred to a tilting furnace to be kept hot during the casting operations. In plants where the liquid blister copper is transferred directly to a refining furnace the above criticism does not hold.

134. The Great Falls Basic Converter.[1]—In 1897 a 7-ft. converter, similar to the one shown in Figs. 149 to 151, having eight ¾-in. tuyères, was lined with magnesite, run for a short time with matte and siliceous ore, and some metallic copper produced; in 1906 chrome brick was tried at the tuyère belt of the acid vessel; the start with the present regular basic practice was made in 1911 with a

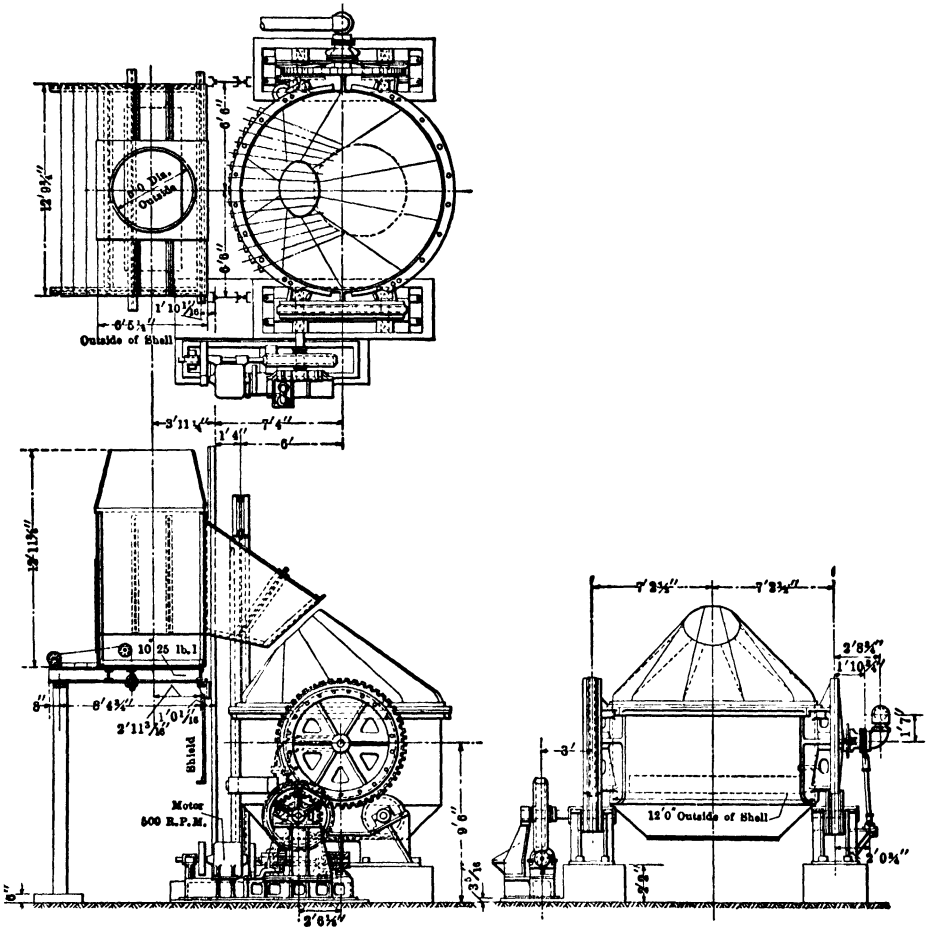

FIGS. 157–159.—General arrangement of Great Falls basic converter.

12-ft. vessel; in 1912 the 20-ft. converter was put in blast; in 1913 it took the place of the preceding vessels. The improvements made here in converting are characterized by an increase in diameter and a shortening of the height of the vessel, and by an increase in the diameter of tuyères.[2] A larger capacity of vessel and a larger volume of air blown into it have resulted in reducing the

[1] WHEELER and KREJCI, *Trans. A. I. M. E.*, 1913, XLVI.

[2] MOORE, *Trans., A. I. M. E.*, 1913, XLVI, 558–561.

number of vessels and the time required for blowing charge; combined they have diminished the cost of plant and of operation.[1]

The general arrangement of the converter with hood and gas-delivery pipe is given in Figs. 157 to 159. The vessel has at either end a short trunnion shaft attached to a friction wheel running on a pair of friction rollers carried by a

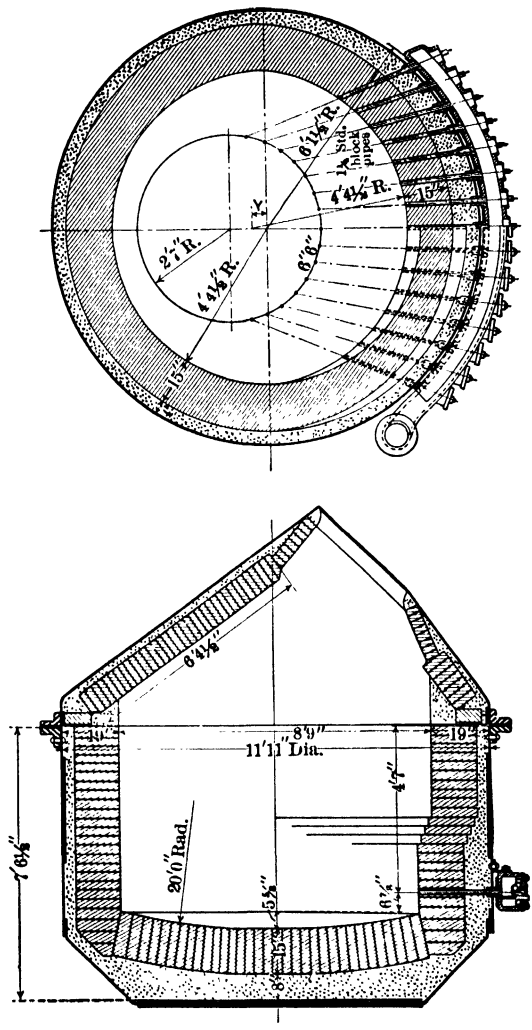

FIGS. 160–161.—Great Falls 12-foot basic converter.

roller stand. One of the friction wheels has a spur wheel driven by a pinion, the shaft of which carries at the opposite end a worm wheel engaging with a double-thread worm attached to the shaft of the electric motor; the break band is not shown. On the opposite side is the wind pipe connection, delivering the air from the blowing engine to the wind box and tuyères.

[1] HAAS, *op. cit.*, 536–558.

The 12-ft. basic vessel, 13 ft. 8.5 in. high, shown in horizontal and vertical sections in Figs. 160 to 161[1] (the number of tuyères has been increased from 15 to 26), has become the model for most of the new installations and the replacements in established plants. The 20-ft. basic vessel, 17 ft. 7.75 in. high, shown in one vertical and two horizontal sections in Figs. 162 to 164 is used only at Anaconda.

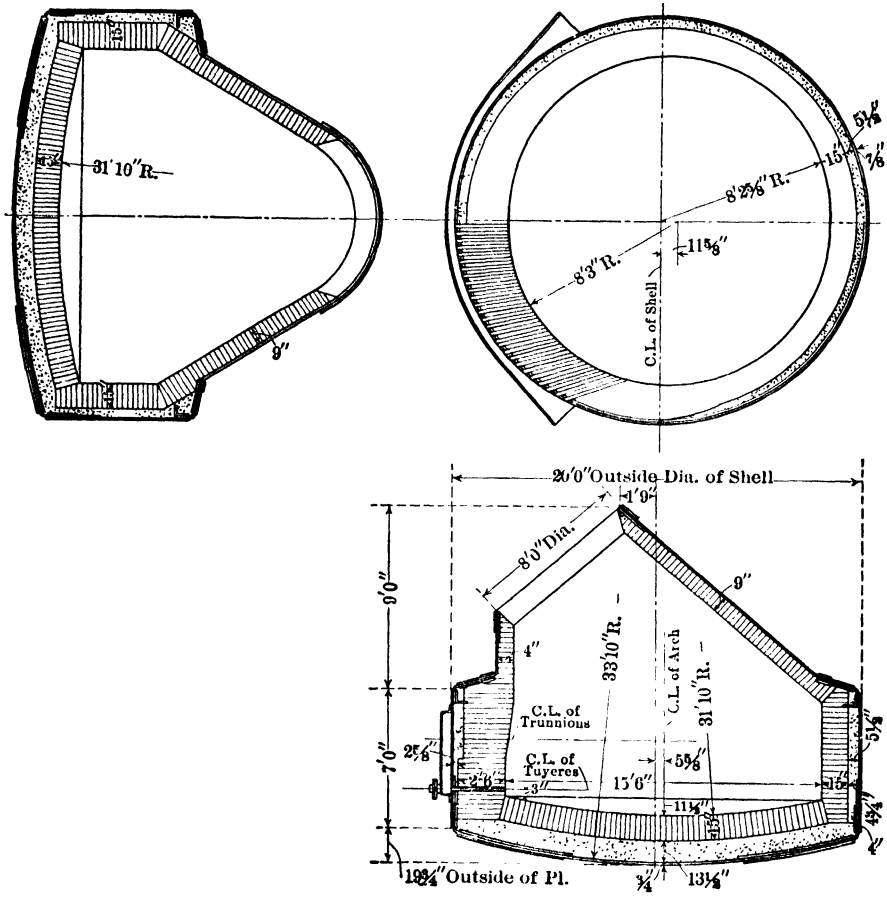

FIGS. 162–164.—Great Falls 20-foot basic converter.

It may be noted that the heights of these basic vessels are small as compared with the earlier acid; experiments had shown that taller vessels were not as satisfactory.

It is important that the mouth be of ample size; 6 ft. 6 in. in diameter for the 12-ft. and 8 ft. for the 20-ft. have proved to be good figures. The advantages of a large mouth are that the gases escape freely, that it is easy to charge liquid matte and solid ore, that there is less tendency to form crusts than with a small one, and that the crusts when formed are easily removed. If the diameter of the

[1] CANAEA, "12-ft. Converter," *Eng. Mining J.*, 1914, XCVII, 809.

mouth exceeds the dimension advocated, there is an excessive loss of heat, which reduces the amount of material that can be melted by the heat of the charge.

The linings and cavities of the two converters are shown clearly in the figures; the lining is backed by a mixture of ground magnesite and sodium silicate; the tuyère-belt is packed with a grout of a similar composition. The position, number and size of tuyères and their material have been the subject of many experiments. The conclusions reached are that there should be at least 5 in. from the lowest point of tuyères to that of the bottom and that there should be enough copper at the finish of a blow to cover the tuyères; the 12-ft. vessel has 12.5 in., the 20-ft. 11.5 in. The results obtained with a greater and smaller number of tuyères of different sizes have shown that 12- and 20-ft. converters should have tuyères 1½ in. inner diameter, and that the former does its best work with 22 and the latter with 31 pipes. As to the material, tuyère pipes in the shape of cast blocks of copper worked well while blowing for white metal; they melted while blowing for blister copper. Heavy copper tubes are used at present. They fit into cast-steel blocks attached on the outside of the converter sheet; the space between the pipes is packed with a mixture of calcined magnesite and sodium silicate.

The amount of air blown into a 12-ft. vessel is about 11,000 cu. ft. per minute; the 20-ft. vessel takes as much as 22,000 cu. ft. while blowing for blister, and about 18,000 while blowing for white metal. With these amounts the air efficiency, determined by analysis of gases taken from converter, ranges from 83.3 to 100 per cent, the lower figure coming from the end of the blister stage, the higher from the slag-forming stage.

A study of the mechanical effects of the blast upon the molten matte has shown: (1) that the air penetrates the charge only for a short distance and then rises to the surface in larger or smaller bubbles, depending upon the sizes of the tuyère pipes, and (2) that the surface of the charge travels upward away from the tuyères toward the front, descends there toward the bottom, and returns across the bottom toward the tuyères.[1]

In starting a newly lined converter, *e.g.*, the 12-ft., the lining is dried and warmed with a wood fire for 36 to 48 hr.; the ashes are removed, and two ladles or 16 tons of matte (Cu 35 per cent) poured in; the vessel is turned over, blown 2 to 3 min., and turned down to see the effect the blow has had on the brick lining. This operation is continued with additions of fresh liquid matte and with extensions of the duration of the blows until the cracks between the bricks have been filled and the surfaces so coated that the individual bricks cannot be recognized; the remaining matte is poured off, and the converter left undisturbed for a few hours to harden the matte in the crevices and the coating on the outside of the brick. In some plants the Wheeler and Krejci method of protecting the brickwork (page 228) is used from the start.

The vessel is now ready for normal work. In this there are charged two ladles or 16 tons of liquid matte, then 3,700 lb. siliceous ore (Cu 3.5, SiO_2 57.8, FeO 13.0, Al_2O_3 11.0, CaO 0.1, S 12.1 per cent); the blast is started, the

[1] See also HAAS, *Trans. A. I. M. E.*, 1913, XLVI, 536–558.

vessel turned over and blown for 30 to 40 min. with a pressure of 14 lb.; the slag formed is poured off. There is now poured in one ladle, or 8 tons, of matte and shot in, 1,800 to 3,700 lb. of ore, depending upon the grade of the matte, followed by 1.0 to 2.5 tons of converter cleanings and cold matte, all of which reduce the temperature of the bath; the vessel is again blown and skimmed. The operations are repeated until five or six ladles of liquid furnace matte have been introduced, and the converter matte has been brought forward to near the white-metal stage (Cu 70 to 75 per cent, recognized by its behavior on the rabble); the slag formed is poured off as much as possible and the rest skimmed; "dope" is fed in the form of scrap copper, white metal, and cleanings which reduce the temperature of the bath, which is now blown to a finish in 5 to 6 min. for every ton of copper in the vessel (12 to 14 tons of Cu or 18 tons of white metal).

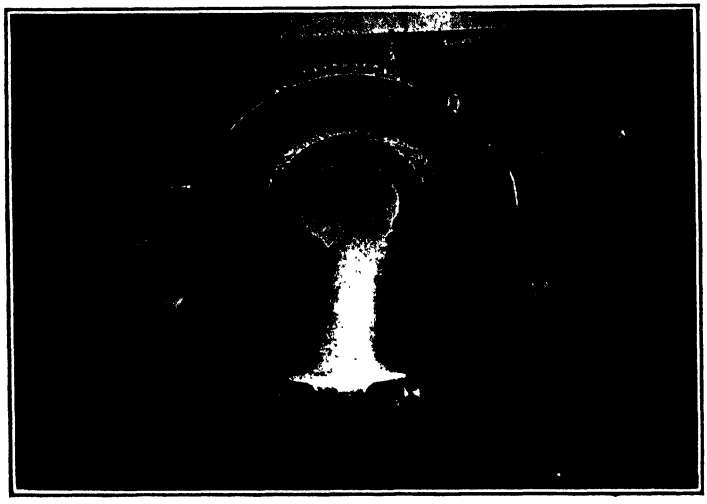

FIG. 165.—Pouring a Great Falls converter.

The tuyères are punched more or less continually, less so during the slagging, than the blister stage.

The progress in the process is usually judged by the flame; when in doubt, the vessel is turned down and the matte examined, or the copper is tested on the rod.

The actual blowing time is 20 min. per ton of copper produced; a charge with matte of 38.9 per cent Cu takes 8.5 tons of ore (Fe 10, Cu 3.5 per cent), or 0.7 tons of ore per ton of Cu; the charge produces 12 to 14 tons of Cu.

A Great Falls converter in pouring position is shown in Fig. 165.

At Anaconda[1] the slag from the converters is treated in a special reverberatory furnace 153 ft. long and 23 ft. 4 in. wide. The charge is 54 per cent molten converter slag, 38 per cent calcines, 6 per cent raw concentrates, and 2 per cent tailings. The total charge is about 1,000 tons per day, which requires 79 tons of coal. The furnace produces matte, which goes to the converters, and slag, which goes to waste.

[1] LAIST AND MAGUIRE, *Trans. A. I. M. E.*, 1920, LXIV, 585.

135. Basic Converter Table.—Table LV gives operating data from various plants. It is self-explanatory.

136. Comparison of the Peirce-Smith and Great Falls Types of Converters. The principal advantages of the Peirce-Smith type are its large capacity, which results in greater heat economies, thus allowing the smelting of larger quantities of cold material, all tuyères equally submerged in any position of the converter, resulting in better air control, less slop during blowing, and flux more easily added. The advantages of the Great Falls type are greater flexibility of operation, due to smaller size, and greater ease of repairing, due to accessibility of interior. It is also easier to observe the condition of the lining in the Great Falls type.

Most operators consider the Peirce-Smith type preferable, especially in large plants, and it is possible that the use of the smaller size, such as is used at

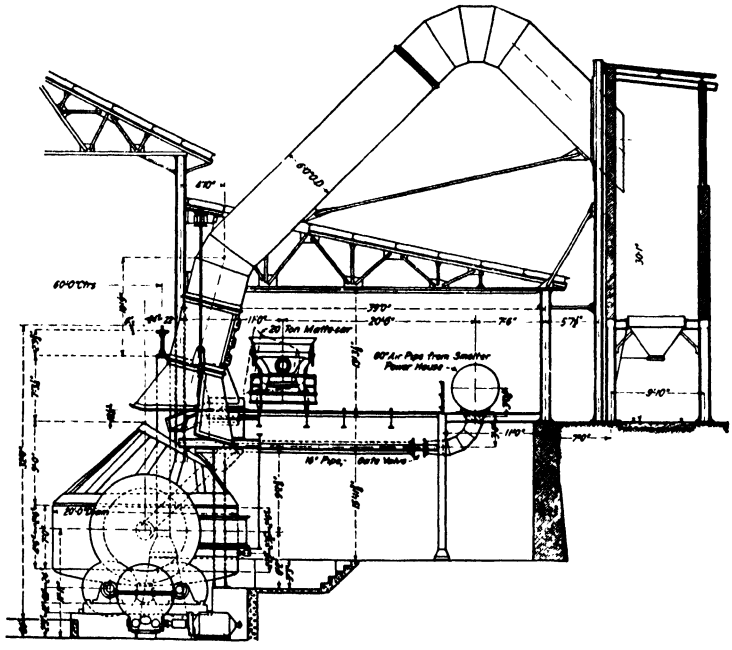

FIG. 166.—Charging a converter from matte car.

Cerro de Pasco, will find favor in operations where storage for large quantities of matte is not available.

137. Turning the Converter.—In new installations the converters are operated by individual motors with suitable gearing. In some of the earlier installations the converters were tilted hydraulically, the connection with the hydraulic plungers being made by wire ropes. This method allows turning through a limited arc only, while the electric motors and gears can turn the vessel through 360 deg., which is an obvious advantage.

138. Charging the Liquid Matte.—The matte may be poured into the converter from a ladle handled by a crane or from a matte car (Fig. 166). The

TABLE LV.—GENERAL BASIC CONVERTER DATA

	International[a] Nickel Co., Sudbury, Ont.	Garfield smelter, Garfield, Utah		A. S. & R. Co., Hayden, Ariz.			El Paso smelter, El Paso, Texas		Tacoma Smelter, Tacoma, Wash.	Copper Queen, Douglas, Ariz.
Type and dimensions of converters	Peirce-Smith 10×37 ft.	Peirce-Smith 13×30 ft.	Peirce-Smith 10×26 ft.	Peirce-Smith 10×26 ft.	Peirce-Smith 13×30 ft.	Great Falls 12 ft.	Peirce-Smith 13×33 ft.	Great Falls 12 ft.	Peirce-Smith 13×30 ft.	Great Falls 12 ft.
Thickness of lining:										
At tuyères	10 in.	18 in.		15 to 18 in.			20 in.		18 in.	15 in.
Opposite tuyères	15 in.	12 in.		13 to 15 in.			20 in.		15 in.	15 in. 4 in. loose backing
Bottom	24 in.	18 in.		15 in.			24 in.		18 in.	9 in. 4 in. loose backing
Elsewhere	Roof 9 in. Ends 20 in.	18 in.		15 in.			Ends 30 in.		Top 13 in. Ends 18 in.	9 in. top
Tuyères:										
Number	44	46	37	35	41	26	42	22	46	22
Size	1½ in.	1½ in.		1½ in.	1¾ in.	1¼ in.	1¾ in.		1½ in.	1½ in.
Material	Cast iron	Extra heavy wrought iron		Cast iron	Cast iron	Cast iron	Cast steel		.....	Extra heavy pipe
Location	Along back	On center line rear sloping down 2 in. in 18		Customary location			....		Center line back	2 ft. 9 in. from bottom
Blast:										
Pressure	10 to 12 lb.	13 lb.		15 lb.	15 lb.	15 lb.	14 lb.		13 lb.	12.1 lb.
Volume	13,000 cu. ft. per min.	160,000 cu. ft. per ton blister		12,000 cu. ft. min.	20,000 cu. ft. min.	8,000 cu. ft. min.	20,000 cu. ft. min.		141,300 cu. ft. per ton blister	8,170 cu. ft. per converter
Charge:										
Matte:										
Average Cu, per cent	19 to 21 Cu + Ni	38 to 42		38			41		42	35.0
Total weight, average tons	450 per day	190	75	75	120	45	120	50	200	50.0
Number of additions	45 to 60	8	4	3	5	3	7 to 8	....	6	5
Flux:										
Character	Quartz, mine rock and sand	Siliceous ore, leady matte shells[b]		Silica rock 1 in., 65 SiO_2, 6 Fe, 10 Al_2O_3			Siliceous ore, 57.1 SiO_2, 4.2 Cu, 4.6 Fe		Siliceous ore, 62 per cent SiO_2	Siliceous ore, 80 SiO_2, ½ in.

Total weight, tons	150	50	20	25	40	15	2 tons for each ladle of matte	36	45
Number of additions	5 to 6 more than matte	10 to 12	6 to 7	4	6	4	.....	6	5 or more
Method of adding	Garr gun	Garr gun		Ladle	Garr gun	Ladle	Garr gun Ladle	Garr gun and ladle	Garr gun
Scrap, etc.:									
Character	Sculls, spills, etc.	Scrap Cu, sculls, conv. flue dust cleanings		Scrap Cu, matte, etc.			Hood cleanings, flue dust, scrap Cu	Cold blister and scrap	Cleanings and scrap
Total weight	5 to 6 tons	40 to 50 tons per 75 tons blister		3,000 lb.	5,000 lb.	2,000 lb.	5 tons	10 to 15 tons	Not weighed
Number of additions	.....	4 to 5 on slag, 3 on finish		2	3	2	4 to 5	Varies	One
Number and duration of fractional blows	50 to 70 blows 15 to 60 min usually 30 to 35	10 blows 25–30 min.	5 blows 30–45 min.	3 blows 60 min.	5 blows 50 min.	3 blows 60 min.	7 to 8 blows 60 min.	7 blows 45 min.	5 or more
Total time start to finish	40 to 50 hr.	14 hr.	12 hr.	6 hr.	7 hr.	6 hr.	12 to 14 hr.	12 hr.	8 hr.
Average weight of blister produced per pour, tons	90[a]	75	30	20	40	15	70	80 to 85	15
Average weight of slag, tons	400	90	36	36	72	27	100	102	30
Average analysis of blister	Cu, 24.50[a] Ni, 55.00 Fe, 0.30 S, 20.00	Cu, 98.76 Fe, Tr. S, 0.06			Cu, 99.4 Fe, 0.03 S, 0.07		Cu, 99.6	Cu, 98.88 Fe, 0.12 S, 0.03	Cu, 99.1
Average analysis of slag	Cu-Ni, 5.75 Fe, 45.0 SiO_2, 28.5	Cu, 3.47 Fe, 45 SiO_2, 26.8			Cu, 4.5 Fe, 48 SiO_2, 21		Cu, 2.98 Fe, 49 SiO_2, 21	Cu, 4.50 Fe, 46.6 SiO_2, 25	Cu, 2.0 Fe, 48.0 SiO_2, 22.0
Method of retreating slag	Usually poured into settlers of B. F. or into reverbs.	Granulate and add to reverberatory charge		Poured by crane back into reverb.			Poured hot into reverb.	In reverb. and blast furnace	Poured liquid into reverb.
Weight magnesite used per ton of blister	8 lb.	4 to 5 lb.		Not figured			Use magnetite	5¼ lb.	Less than 1 lb.

TABLE LV.—GENERAL BASIC CONVERTER DATA (*Continued*)

	United Verde, Clarkdale, Ariz.	International Smelter, Miami, Ariz.		Nevada Consolidated, McGill, Nev.	Braden Copper Co., Caletones, Chile	Calumet & Arizona, Douglas, Ariz.	Anaconda Copper Mining Co., Anaconda, Mont.	Mt. Lyell Mining & Rwy. Co., Queenstown, Tasmania
Type and dimensions of converters.	Great Falls 12 ft.	Great Falls 12 ft.	Peirce-Smith 12×20 ft.	2 Peirce-Smith 10×36 ft.	Peirce-Smith 13×30 ft.	6 Great Falls 12 ft.	Great Falls 20 ft.	
Thickness of lining:								
At tuyères	15 in.	30 in.	30 in.	18 in.	18 in.	Brick 15 in.	30 in.	24 in.
Opposite tuyères	15 in.	15 in.	15½ in.	13 in.	13 in.	Brick 15 in. Backing 5 in.	Brick 15 in. Backing 6 in.	19½ in.
Bottom	9 in.	15 in.	15½ in.	13 in.	13 in.	Brick 9 in. Backing 5 in.	Brick 15 in. Backing 13 in.	19½ in.
Elsewhere	9 in. top	9 in. top	Ends 13½ in.	9 in. top	Ends 22½ in.	Top 9 in.	Top 9 in.	9 in.
Tuyères:								
Number	16	20	30	30	41	24	31	14
Size	1½ in.	1½ in.	1½ in.	1¼ in.	1¾ in.	1½ in.	1¾ in.	1¼ in.
material	Standard steel pipe	Extra heavy wrought iron pipe		Cast iron	Steel	Std. gaspipe	Steel tubing	Steel pipe
Location	.....	1 ft. 11 in. above bottom	2 ft. 9 in. below center line	6 in. below center line	2 in. below center line			
Blast								
Pressure	14 lb.	12 lb.		12 lb.	14 lb.	12.3 lb.	15 lb.	12 to 15 lb.
Volume	9.7 tons air per ton copper	139,857 cu. ft. per ton copper		9,000 cu. ft. per min. per converter	23,000 cu. ft. per min. at 90° 5,000 ft. elev.	437,000 cu. ft. per ton blister	15,000 cu. ft. per min.	3,500 cu. ft per min.
Charge.								
Matte:								
Average Cu, per cent	26.6	40.9		45	43	22	38	37
Total weight, average tons	.....	188 per day		134	140	43.1	70	12
Number of additions	.....	2	5	6 to 20 av. 12	5	3 to 4	.....	2
Flux:								
Character	69.2 SiO_2	Siliceous ore[c]		Siliceous ore[d]	About 63% SiO_2 (wet)	Siliceous ore, 80% Converter slag, 20% Crushed through ⅝ in.	Run of mine from sampling mill, fines removed	North Lyell high grade ore 12 to 16 per cent Cu.
Total weight, tons	1.4 tons per ton Cu	37.5 per day		25 tons per charge	22 tons per charge	11.4 tons	15 to 20 tons per charge	2.89 tons per charge
Number of additions	.....	One after every pour. More if necessary		3 with first matte, 1 for each subsequent	Various	.....	4–5	4
Method of adding	Into mouth from overhead bins	By spout from overhead bins		Garr gun	By ladle	By spout from overhead bin	By "boat" with crane	Crane
Scrap, etc.:								

Character	Cleanings, skulls, etc.	Cleanings and scrap approx. 60.8 Cu		Old molds and general scrap	All by-products, scrap and flue dust	Scrap and cleanings, cement Cu from AjO	Refinery slag and scrap	Floor cleaning
Total weight	1.1 ton per ton Cu	14.4 tons		1 ton per month	¾ ton per ton blister	Approx. 5.7 tons	8 to 10 tons	1.93 tons per charge
Number of additions	. . . . .	2	5	. . . . .	Various	. . . . .	2, One before matte charge. one after skimming	4
Number and duration of fractional blows.	. . . . .	1st 60 min. 2nd 80 min. Finish 85 min.	1st 90 min. 2nd 105 min. 3rd 120 min. Finish 150 min.	12 min. per ton iron slagged	About 6 blows 45 min. each	. . . . .	3, 1.8 to 3.0 min. per ton matte	3 periods: 1st 60 min. 2nd 90 min. 3rd 60 min.
Total time start to finish	. . . . .	4 hr. 27 min.	7 hr. 45 min.	15 to 20 hr.	About 9½ hr.	62.4 blowing min. per ton blister	5 to 6 hr.	3¾ hr.
Average weight of blister produced per hour, tons	. . . . .	12	27	50 to 60	55	8 82	20 to 25	5.08
Average weight of slag, tons	. . . . .	15.5		70	82	35 25	50 to 55	8
Average analysis of blister	Cu, 99.32	Cu, 99.46 Ag, 6.30 oz. Au, 0.077 oz.		Cu, 99.5 Ag, 2.5 oz Au, 1 oz.	Cu, 99.67	Cu, 99.2 Ag, 0.48 oz. Au, 0.016 oz.	. . . . .	Cu, 99.13 Ag, 20.05 oz. Au, 0.33 oz.
Average analysis of slag	Cu, 2.9 Fe, 51 SiO_2, 18.4	Cu, 2.3 Fe, 53 S, 1.8		Cu, 1.5 Fe, 45.6 SiO_2, 29.2 S, 0.7	Cu, 5.5 Fe, 47.9 SiO_2, 18.7 S, 0.19	Cu, 2.37 Fe, 51.3 SiO_2, 18.3 S, 2.5	Cu, 4.8 Fe, 45.9 SiO_2, 22.9	Cu, 2.21 Fe, 52.1 SiO_2, 22
Method of retreating slag	Reverbs.	Poured hot into reverb.		Poured hot into reverbs.	Cast and remelt in blast furnace	Poured hot into reverbs.	Poured hot into special reverb.	Blast furnace
Weight magnesite used per ton of blister	0.33 lb.	2.06 lb.		10.74 lb.	4.5 lb.	. . . . .	3.5 to 4 lb.	7.56 lb.

(a) This is the weight of white metal. The International Nickel Co. does not blow to blister.
(b) 50 to 75 per cent SiO_2, 7.5 Cu, 3 Pb, 35 oz. Ag.
(c) 57 per cent SiO_2, 2.3 Cu, 7 Al_2O_3, 15 Fe, 0.2 S.
(d) 62.6 per cent SiO_2, 4.76 Cu, 9.4 Al_2O_3, 7.9 Fe, 1.1 S, 4.45 oz. A_2, 0.007 oz. Au.

former arrangement usually requires the turning down of the converter during the charging of the matte, while the latter permits the introduction of matte during the blowing operation.

139. Charging the Siliceous Flux.—There are three ways of introducing the necessary silica into the converter, *viz.*, by means of "boats" handled by cranes which dump the material into the mouth of the converter after turning it down; by means of overhead bins (Fig. 167) and adjustable spouts from which the flux can be drawn at will into the converter during blowing; by means of the Garr gun, which is a device for blowing the silica into the converter from the side with compressed air. In modern installations where the Great Falls type of converter is used the overhead bin is common, and where the Peirce-Smith type is used the Garr gun is the preferred method.

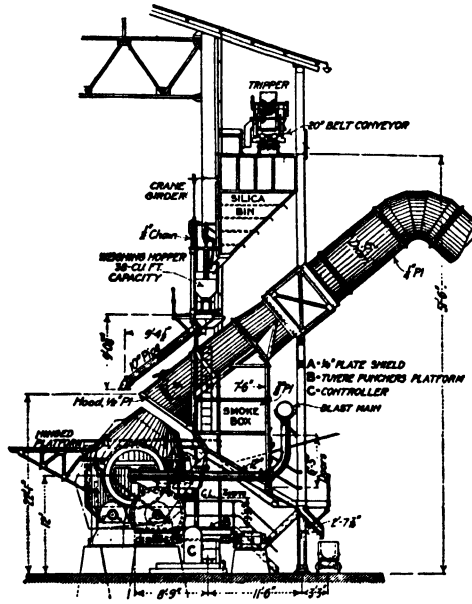

FIG. 167.—Overhead bins for converter flux.

140. Charging the Scrap, Etc.—At certain times during the blow the converter tends to become overheated. To prevent this, various quantities of cleanings from the converter aisle, ladle skulls, etc. are added to the charge by means of a "boat" handled by a crane. The double purpose is thus served of keeping down the heat and working up copper-bearing scrap which otherwise must be returned to the smelting furnace.

141. Operating the Basic Converter, General.—There are three different methods by which basic converting may be carried on: (1) Add a charge of matte with the necessary flux, blow to white metal, adding cold scrap or cleanings if temperature gets high, skim slag, and blow to blister copper. This method may be advantageous if a high-grade matte is being used. (2) Blow several charges in different converter vessels simultaneously to white metal, then skim and

combine all the white metal in one of the vessels and finish to blister copper. This method is sometimes convenient when using low-grade matte in 12-ft. Great Falls converters. (3) Blow a charge nearly to white metal, skim roughly, add more matte and flux with such cold scrap, etc. as the converter will take, and repeat the operation until the converter contains white metal enough to submerge the tuyères. The slag is then skimmed carefully and the charge finished to blister copper. This is the procedure followed in most plants and is illustrated by the following examples of practice, using a Peirce-Smith and a Great Falls converter.

TABLE LVIII.—NOTES ON A TYPICAL CHARGE IN A 30- BY 13-FT. PEIRCE-SMITH CONVERTER
(Using a 40 per cent matte and 60 per cent silica flux)

Work done	Converter blowing		Not blowing		Cumulative time	
	Hr.	Min.	Hr.	Min.	Hr.	Min.
Charge 5 ladles (60 tons) matte						
Charge 10 tons matte shells						
Charge 16,000 lb. silica flux	1		.	.	1	
Skim 3 pots slag	.	.		15	1	15
Charge 2 ladles (24 tons) matte						
Charge 5 tons converter clean-up				.	1	55
Charge 10,000 lb. silica flux		40				
Skim 2 pots slag		.		10	2	5
Charge 1 ladle (12 tons) matte						
Charge 5 tons copper slag						
Charge 10,000 lb. silica flux		30		.	2	35
Skim 2 pots slag				10	2	45
Charge 1 ladle matte (12 tons)						
Charge 10,000 lb. silica flux		30			3	15
Skim 2 pots slag				10	3	25
Charge 1 ladle matte (12 tons)						
Charge 5 tons converter clean-up						
Charge 10,000 lb. silica flux		30	.		3	55
Skim 2 pots slag		..		10	4	5
Charge 1 ladle matte (12 tons)						
Charge 10,000 lb. silica flux		25		..	4	30
Skim 2 pots slag		..		10	4	40
Charge 1 ladle matte (12 tons)						
Charge 8,000 lb. silica flux		25		..	5	5
Skim 1 pot slag		..	.	10	5	15
Charge 8,000 lb. silica flux	.	25	.	..	5	40
Skim 1 pot slag		..	.	10	5	50
Charge 6,000 lb. silica flux	.	25		..	6	15
Skim 1 pot slag	.	..	.	10	6	25
Charge 4,000 lb. silica flux		20		..	6	45
Skim 1 pot slag	.	..	.	15	7	
Charge[a] 5 tons scrap copper						
Charge 5 tons converter hood clean-up						
Charge 5 tons converter flue dust						
Blowing charge for copper	3	20			10	20
Banking slag and transferring copper to pouring ladle	.	..		50	11	10
Cleaning tuyères, silica gun and adding new matte charge			.	50	12	
Total time	8	30	3	30	12	00

Total matte ..... 144 tons.
Total silica ..... 46 tons.
Total cold material ..... 40 tons.
Total blister produced ..... 63 tons.
Total slag produced ..... 17 pots or 109 tons.

[a] Only high-grade, clean, cold material is used during finishing blow.

TABLE LVI*b*.—NOTES ON A TYPICAL CHARGE

(12-foot Great Falls vertical-type converter; converter blowing reverberatory and blast-furnace matte mixed; reverberatory matte 30 per cent copper; blast-furnace matte 42 per cent copper)

Work done	Converter blowing		Not blowing		Cumulative time elapsed	
	Hr.	Min.	Hr.	Min.	Hr.	Min.
Charged 1 ladle (11¼ tons) reverberatory matte	.	....	.	1	.	1
Blowing charge for slag	.	3	.	....	.	4
Charging siliceous flux	.	8	.	....	.	12
Blowing charge for slag	.	5	.	....	.	17
Charging a boat (2 tons) cold converter floor cleanings	.	....	.	1	.	18
Blowing charge for slag	.	23	.	....	.	41
Charging siliceous flux	.	3	.	....	.	44
Blowing charge for slag	.	8	.	....	.	52
Skimming slag	.	....	.	2	.	54
Charged 1 ladle (9.2 tons) blast-furnace matte	.	..	.	1	.	55
Charging siliceous flux	.	5	.	....	1	
Blowing charge for slag	.	17	.	....	1	17
Charging siliceous flux	.	3	.	....	1	20
Blowing charge for slag	.	1	.	...	1	21
Charged cold slag (1 ton) from copper melting furnace	.	1	.	...	1	22
Blowing charge for slag	.	3		..	1	25
Charging siliceous flux	.	5	.	..	1	30
Blowing charge for slag	.	4	.	....	1	34
Skimming slag		....	.	5	1	39
Charging siliceous flux	.	2	.	..	1	41
Charged 1 ladle (9.2 tons) blast-furnace matte	.	....	.	1	1	42
Blowing charge for slag	.	1	.	...	1	43
Charging siliceous flux	.	7	.	...	1	50
Blowing charge for slag	.	6	.	...	1	56
Charged a boat (2 tons) cold converter floor cleanings	.	....	.	0.5	1	56.5
Blowing charge for slag	.	16.5	.	..	2	13
Charging siliceous flux	.	3	.	....	2	16
Blowing charge for slag	.	8	.	..	2	24
Charging siliceous flux	.	6	.	...	2	30
Blowing charge for slag	.	1	.	...	2	31
Skimming slag	.	..	.	4	2	35
Charged a pouring spoon shell (1½ tons cold copper)	.	0.5	.		2	35.5
Blowing charge for copper	.	8.5	.	...	2	44
Added a transferred charge of white metal	.	.	.	1	2	45
Blowing charge for copper	.	21	.	...	3	6
Added another transferred charge of white metal	.	...	.	1	3	7
Blowing charge for copper	1	53	.	....	5	
Turned down converter and banked with cold slag	.	...	.	8	5	8
Pouring finished charge of copper from converter	.	..	.	6	5	14
Barring tuyères, pulling collar, claying converter mouth	.	....	.	13	5	27
Total time	4	42.5	.	44.5	5	27

TABLE LVIc.—NOTES ON A TYPICAL CHARGE

(12-ft. Great Falls vertical-type converter; converter blowing all reverberatory matte; 30 per cent copper)

Work done	Converter blowing		Not blowing		Cumulative time elapsed	
	Hr.	Min.	Hr.	Min.	Hr.	Min.
Charged 1 ladle (11¼ tons) reverberatory matte	.	....	.	2	.	2
Blowing charge for slag	.	13	.	...	.	15
Charging a boat (2 tons) converter floor cleanings	.	....	.	0.5	.	15.5
Blowing charge for slag	.	13.5	.	....	.	29
Charging siliceous flux	.	2.5	.	....	.	31.5
Blowing charge for slag	.	17.5	.	....	.	49
Skimming slag	.	....	.	3	.	52
Charging 1 ladle (11¼ tons) reverberatory matte	.	....	.	1	.	53
Charging siliceous flux	.	8	.	....	1	1
Blowing charge for slag	.	32	.	....	1	33
Charging siliceous flux	.	2	.	...	1	35
Blowing charge for slag	.	15	.	...	1	50
Charging siliceous flux	.	3	.	...	1	53
Blowing charge for slag	.	15	.	..	2	8
Skimming slag	.	...	.	6	2	14
Charging siliceous flux		5	.	...	2	19
Blowing charge		3	.	....	2	22
Charging 1 ladle (11¼ tons) reverberatory matte	.	...	.	1	2	23
Blowing charge for slag	.	6	.	.....	2	29
Charging siliceous flux	.	3	.	...	2	32
Blowing charge for slag	.	17	.	..	2	49
Charging siliceous flux		9	.	....	2	58
Blowing charge for slag	.	27	.	....	3	25
Skimming slag	.	...	.	6	3	31
Blowing charge for copper	.	1	.	....	3	32
Added a pouring spoon shell (1½ tons cold copper)		0.5	.	...	3	32.5
Blowing charge for copper	.	16.5	.	.	3	49
Added a transferred charge of white metal	.	..	.	1	3	50
Blowing charge for copper	.	16	.		4	6
Added another transferred charge of white metal	.	.	.	1	4	7
Blowing charge for copper	.	5	.	..	4	12
Added a small tap of reverberatory matte	.	.	.	1	4	13
Blowing charge for copper	1	47	.	....	6	
Turned down converter and banked with slag	.	.	.	5	6	5
Pouring finished charge of copper from converter	.	..	.	7	6	12
Barring tuyères, pulling collar, claying converter mouth	.	....	.	15	6	27
Converter ready to start another blow						
Total time of operation	5	37.5	.	49.5	6	27

Note: Siliceous flux used per ladle of reverberatory matte estimated at 3 tons.

142. Selective Converting.—This was originated by David[1] and has been used successfully by the Phelps Dodge Corporation at Clifton, Ariz., but with regular Great Falls type converters instead of a special shape as used by David. Instead of blowing the entire charge of white metal to blister copper in one stage, the blowing is stopped when a small amount of blister has been formed. This metal which contains nearly all the gold and much of the silver, together with many of the impurities, is removed for electrolytic refining. The remainder of the white metal is then blown to blister, which is given only the fire refining treatment and sold for casting copper. At present (1924) the precious metal values in the ore and the market conditions make it more profitable to ship all the blister copper to the electrolytic refinery and selective converting is not used.

[1] *Eng. Mining J.*, 1898, LXVI, 487; *Ann. mines*, 1898, XIII, 621.

143. Protecting and Repairing Converter Lining.—In all the early work on basic converters great difficulty was experienced in protecting the lining, especially along the tuyère belt. It was soon recognized that low temperatures were necessary to protect the brickwork and at some plants the walls were washed occasionally with molten white metal to fill up the cracks between the bricks. When operating at low temperatures some observers recognized on the bricks a coating which disappeared at higher temperatures. There were apparently some attempts made to maintain this coating,[1] but it remained for Wheeler and Krejci[2] to devise a method for deliberately coating a new converter lining with a magnetic slag, which is formed by blowing matte at a low temperature either alone or in the presence of a small amount of SiO_2. A newly lined converter is brought slowly to a bright red, charged with liquid matte of a low grade, say 35 per cent Cu, blown for 10 to 15 min., whereupon cold matte is added to reduce the temperature. These operations are repeated until the matte in the vessel has been brought forward to white metal, which is then poured. The brick of the empty vessel will be found to have been coated with what may be briefly called magnetite. A fresh charge of liquid matte is given and a little less siliceous ore added than in regular work; the charge is blown in the usual way, and is followed by other similar charges until the coating has become so thick that all joints of the brickwork have disappeared. The thickness is regulated by the temperature of the converter and the percentage of SiO_2 of the slag. A careful watch is kept of the brickwork and when it becomes exposed a new coating of the magnetic slag is applied by the above method.

With good basic practice it is seldom necessary to reline a converter shell completely. It is usually sufficient to patch it where necessary. Along the tuyère belt a new section of brickwork is sometimes required, but even here it is the practice at some plants to make some magnetic slag by the Wheeler and Krejci method and cast it solid along the tuyère belt. The tuyère holes are then opened up by drilling. It is by this method that the remarkably low magnesite consumption is maintained at the United Verde Smelter (see Table LV).

144. Direct Smelting of Concentrates in the Converter.—The Kundsen process[3] operated in Norway for a few years produced a matte with 40 to 50 per cent Cu. This operation is in reality a modification of pyritic smelting.

Experiments for the direct production of blister copper from concentrates have thus far not been commercially successful,[4] but it is possible that a process may be worked out in a modified converter if the heat of reaction is more carefully conserved.

[1] *Peirce-Smith Converter Co. vs. United Verde Copper Co.*, U. S. Dist. Court, Dist. Delaware, No. 377, in equity.

[2] *Trans. A. I. M. E.*, 1913, XLVI, 562; Discussion, *Eng. Mining J.*, 1914, XCVII, 431 (JAMES), 431 (KREJCI), 628 (HOWARD), 724 (WILLIAMS), 821 (MERTON, KREJCI).

[3] KNUDSEN, *Eng. Mining J.*, 1904, LXXVII, 757; *Mineral Ind.*, 1903, XII, 119; 1908, XVII, 315; *Oesterr. Z. Berg. Hüttenw.*, 1909, LVII, 426; 1912, LX, 568; *Eng. Mining J.*, 1909, LXXXVII, 1080; DYCK, *Metallurgie*, 1907, IV, 416; HOFMAN and MOSTOWITSCH, *Trans. A. I. M. E.*, 1908, XXXIX, 652.

[4] *Mineral Ind.*, 1902, XI, 206; *Eng. Mining J.*, 1908, LXXXV, 776, 1063; *Trans. A. I. M. E.*, 1913, XLVI, 426.

145. Dust Recovery and Treatment, General.—The systematic treatment of copper-smelter gases for the recovery of values was not common before the present century. Attention to it was forced in some instances by laws for the protection of the farmers from damage. Later the increase in flue dust due to the treatment of fine concentrates and the demand for some of the by-products, notably arsenic, made dust and fume recovery profitable. Practically all plants now have dust chambers as part of their flue systems and in many cases an elaborate system of flues and dust chambers is supplemented by some form of Cottrell precipitator.

146. Studies in Settling Dust at Great Falls.[1]—Although this work was done some years ago and the character of the Great Falls plant has completely changed since that time, the data obtained are of considerable general interest.

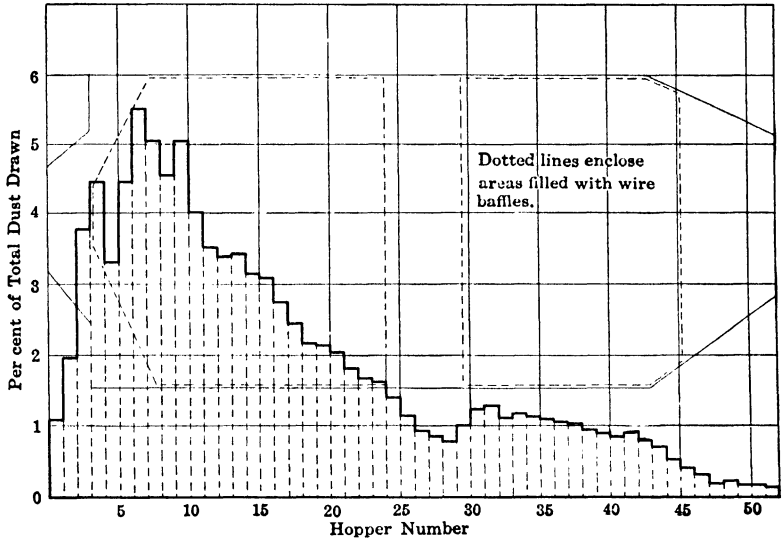

FIG. 168.—Relative deposition of dust through dust-chamber, Great Falls.

The plant had 24 Evans-Klepetko-McDougall furnaces (16 ft. inner diameter), three gas-fired reverberatory smelting furnaces (42 ft. 6 in. by 15 ft. 9 in.) with regenerative chambers, five blast furnaces (54 by 160 in.), and seven upright converters (7 ft. diameter and 14 ft. 7 in. high). Elaborate working experiments were carried on with various dust-arresting devices before the present system of condensation was introduced. The results of these tests are represented graphically in Fig. 168. Curves 32 and 34, representing gases passing through an open or ordinary flue, show that under the conditions of the tests only 30 to 40 per cent of the dust was collected. With narrow plates suspended in such a way that the gas current strikes the edge (Freudenberg plates) matters are improved (curve 33), as the collection of dust is over 40 per cent. By suspending long narrow plates in the flue in such a way that the gas current

[1] HERRICK, *Mines Minerals*, 1909, XXX, 257; GOODALE, *Trans. A. I. M. E.*, 1909, XL, 891; GOODALE and KLEPINGER, *op. cit.*, 1913, XLVI, 567.

strikes the faces, a great deal more dust is precipitated, as seen in curve 36 (3⅛-in. baffle plates), and in the entrance and exit parts of curve 35 (6¼-in. baffle plates). The wider plates, reducing the cross-sectional area 50 per cent, were more effective as dust catchers than the narrower, which reduce it 25 per cent, but both strongly interfere with the draft. The difference between open and open- and-baffled flue is shown strikingly in curve 35. The action of suspended wires is seen in curve 39 ("wire baffles"). The wire baffles do not obstruct the draft as do plate baffles and at first do not collect as much dust, but make up for this later on, causing 84 per cent of the dust to separate, which is more than the other arresting devices. Curve 38 brings out the difference in settling power of an open flue and one provided with wires. Curve 37 represents the effect which sudden reductions and enlargements of area of flue at certain distances have upon the settling of dust. In the tests the flue, 304 ft. long and 4 by 4 ft. 6 in. = 16 sq. ft. area, was partly closed, 100 and 104 ft. from the ends, by two partitions each having in the center an opening 1 ft. 6½ in. in diameter = 1.8 sq. ft. area. This arresting device is effective as a collector of dust and is cheap to build. With a reduction of area of from 18 to 1.8 sq. ft. the interference with the draft was too great to work satisfactorily, but the data show that the method is promising.

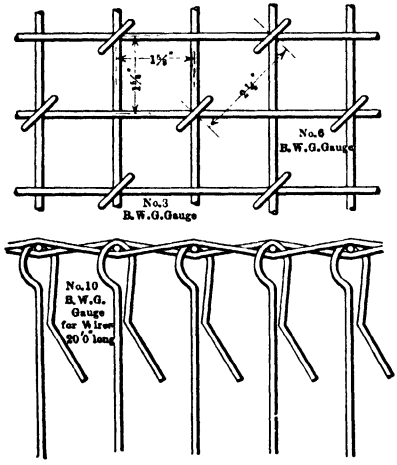

FIGS. 169–170.—Method of hanging wires in dust-chamber at Great Falls.

The experimental work resulted in the installation of the Roesing wire system.[1] The wires were suspended in two divisions. From the entrance of the chamber to a distance of 150 ft., and back from the exit also for 150 ft., the space was fully occupied by wires; the intervening space of 47 ft. was left free from wires. The purpose of this arrangement was to collect dust in the entrance, and fume in the exit, division. The wired part of the chamber held about 1,200,000 steel wires spaced 2.3 in. center to center; for a distance of 51 ft. from the inlet the wires were No. 8 W. & M. gage and 16 ft. long; the rest of the wired chamber had No. 10 wires 20 ft. long. For the support of the wires, steel-wire netting (Figs. 169 and 170) of 1⅝-in. spaces was bolted to the I-beams of the roof; the baffle wires were bent at one end to the form of a shepherd's hook and suspended from alternate intersecting points; they were thus staggered, which aided in arresting dust.

For the shaking of the wires to dislodge adhering dust, angle-iron frames, 10 ft. wide extending from the side walls to near the partition wall, were suspended by hangers about 10 ft. long. A frame had a wire netting with openings 4 by 7 in., was shaken for 30 min. at intervals of 60 to 90 days by a connect-

[1] HOFMAN, "General Metallurgy," 1913, p. 846.

ing rod extending through the flue wall and attached to a bell-crank lever actuated by an eccentric with a stroke of 9.5 in. and 60 strokes per minute; the eccentrics on each side of the chamber were carried by a line shaft operated by an electric motor.

After being in successful operation for some time, the corrosion of the supporting network allowed the wires to drop to the bottom of the flue and they have never been replaced. Some data obtained during the time they were used are given below as being of general interest.

Table LVII gives temperature and draft readings in the leading divisions of the flue system; Table LVIII the velocities, volumes, average temperatures,

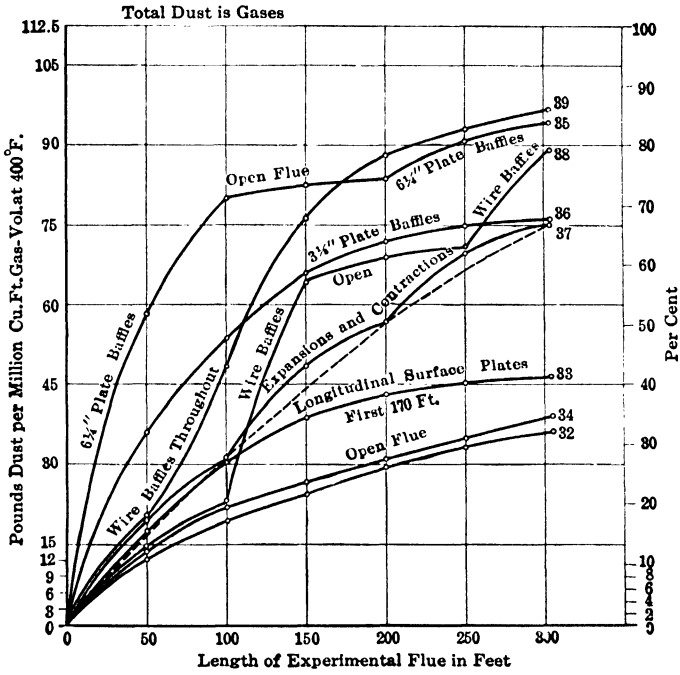

FIG. 171.—Relative efficiency of dust-arresting devices, Great Falls.

and weights of gases; and Table LIX the amounts of gas produced per furnace and per ton of charge.

Practically all the dust and most of the metallic fume were recovered. The escaping gases contained free H_2SO_4 22.23, SiO_2 2.30, Cu 0.70, $(FeAl)_2O_3$ 7.08, S 6.67, Sb_2O_3 1.47, Bi_2O_3 0.81, PbO 0.49, CaO 0.18, ZnO 3.31, O (calculated for S) 10.23 per cent.

Figure 171 shows the relative deposition of dust through the chamber; the superimposed fine full-drawn lines represent the outline of the dust chamber, the dotted lines the areas filled with wires. The quantities and analyses of dust collected in a period of 41 months are shown in Table LX. The distribution of the material is shown in Table LXI.

TABLE LVII.—TEMPERATURE AND DRAFT READINGS

Locations of reading	Elevation	Temperature in flue, F.°	Temperature of atmosphere, F.°	Draft readings, inches water	
				Impact tube	Static tube
(*A*) Blast furnace	3,338	391	80	1.12	1.16
(*B*) McDougall	3,361	419	80	0.94	0.98
(*D*) Cross-take	3,413	358	80	0.88	0.97
(*D*) Cross-take	3,413	346	70	0.94	1.01
(*L*) Connecting flue	3,413	312	70	2.20	2.26
(*U*) Near chimney	3,570	310	70	1.80	1.84

TABLE LVIII.—VELOCITIES, VOLUMES, AVERAGE TEMPERATURES, AND WEIGHTS OF GASES

Locations	Date, 1911	Number and kind of furnaces	Average temperature, F.°	Clear area of flue, square feet	Velocity, feet per second	Volume at observed temperature, cubic feet per minute	Pounds gas per minute	Pounds gas per furnace per minute
A	Apr. 6 to 8	4 B. F.	345	401.6	17.26	415,960	18,510	4,063
B	Apr. 6 to 8	10 McD.	352	169.0	17.50	253,500	10,980	1,100
C	Apr. 6 to 8	5 Conv.	303	78.5	50.37	213,630	9,840	1,970
G	Mar. 21 to 24	2 Rev.	496	152.5	43.34	396,700	14,530	7,270
D_1	Apr. 6 to 8	4 B. F. 10 McD. 5 Conv.	331	636	21.80	859,300	38,190	
E_1	Mar. 21 to 24	4 B. F. 6 McD. 5 Conv.	286	977	15.51	901,400	42,280	
F	Mar. 21 to 24	4 B. F. 6 McD. 5 Conv. 2 Rev.	311	977	21.03	1,234,900	56,110	
E_2	Apr. 10	4 B. F. 10 McD. 5 Conv.	290	977	.54	910,950	42,270	
D_2	Apr. 10	do.	322	636	22.74	867,760	38,700	

TABLE LIX.—AMOUNT OF GAS PER FURNACE AND PER TON OF CHARGE

Kind of furnace	Observed temperature corresponding to given volume, F.°	Rate per minute		Rate per 24 hr.		Average tons charged	Per ton of charge	
		Cubic feet	Pounds	Cubic feet	Pounds		Cubic feet	Pounds
Blast	345	103,990	4,630	149,745,600	6,667,200	[a]391.6	384,900	17,000
McDougall	352	25,350	1,100	36,504,000	1,584,000	70.7	516,300	22,400
Converter	303	42,730	1,970	61,531,200	2,836,800	[b]32.0	1,922,900	88,600
Reverberatory	496	198,350	7,270	285,624,000	10,468,800	188.5	1,515,200	55,500

[a] Includes flux but does not include fuel.
[b] Tons copper produced per converter day.

TABLE LX.—QUANTITY AND ANALYSES OF FLUE DUST

Name of flue	Tons dust		Cu, per cent	Ag, ounces per ton	Au, ounces per ton	Insol.	SiO_2	FeO	Al_2O_3	CaO	S
	Total for 41 months	Average per month									
Blast furnace	87,020	2,122	8.08	2.7	0.019	34.7	26.8	33.0	7.1	1.7	16.1
McDougall furnace	18,741	457	10.22	3.6	0.023	37.6	29.0	27.1	7.5	0.3	21.3
Up-take and cross-take	17,360	423	12.59	4.1	0.026	34.8	26.0	27.2	7.2	0.7	19.5
Main dust chamber	64,048	1,562	8.61	3.3	0.020	33.3	23.6	14.5	8.0	0.7	11.8
Connecting flue[a]	4,000	98	3.09	3.1	0.012	12.6	8.5	5.4	4.0	0.1	10.6
Total	191,169	4,662									

[a] Weight estimated. Average analysis is from sample taken in June, 1912, at different points from dust chamber to chimney.

TABLE LXI.—PERCENTAGE DISTRIBUTION OF MATERIAL IN FLUE SYSTEM

	Weight	Copper	SiO_2
Blast-furnace flue	39.3	41.4	47.3
McDougall-furnace flue	8.5	11.3	11.0
Cross-take flue	7.8	12.9	8.8
Main dust chamber	28.9	32.5	30.7
Connecting flue	1.8	0.7	0.7
Stack discharge	13.7	1.2	1.5
Totals	100.0	100.0	100.0

147. Studies of Dust Losses at the Copper Queen Smelter.—J. Moore Samuel[1] made an extensive study of dust losses at this plant and has described

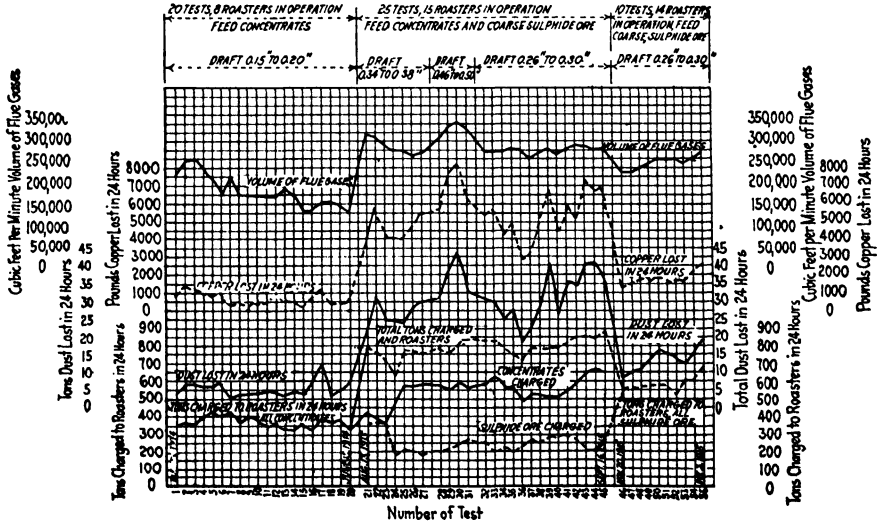

FIG. 172.—Dust losses in roasting.

the methods used and results obtained in the different departments. His curves showing the losses in the roasters is given in Fig. 172. It is significant

[1] *Trans. A. I. M. E.*, 1916, LV, 770.

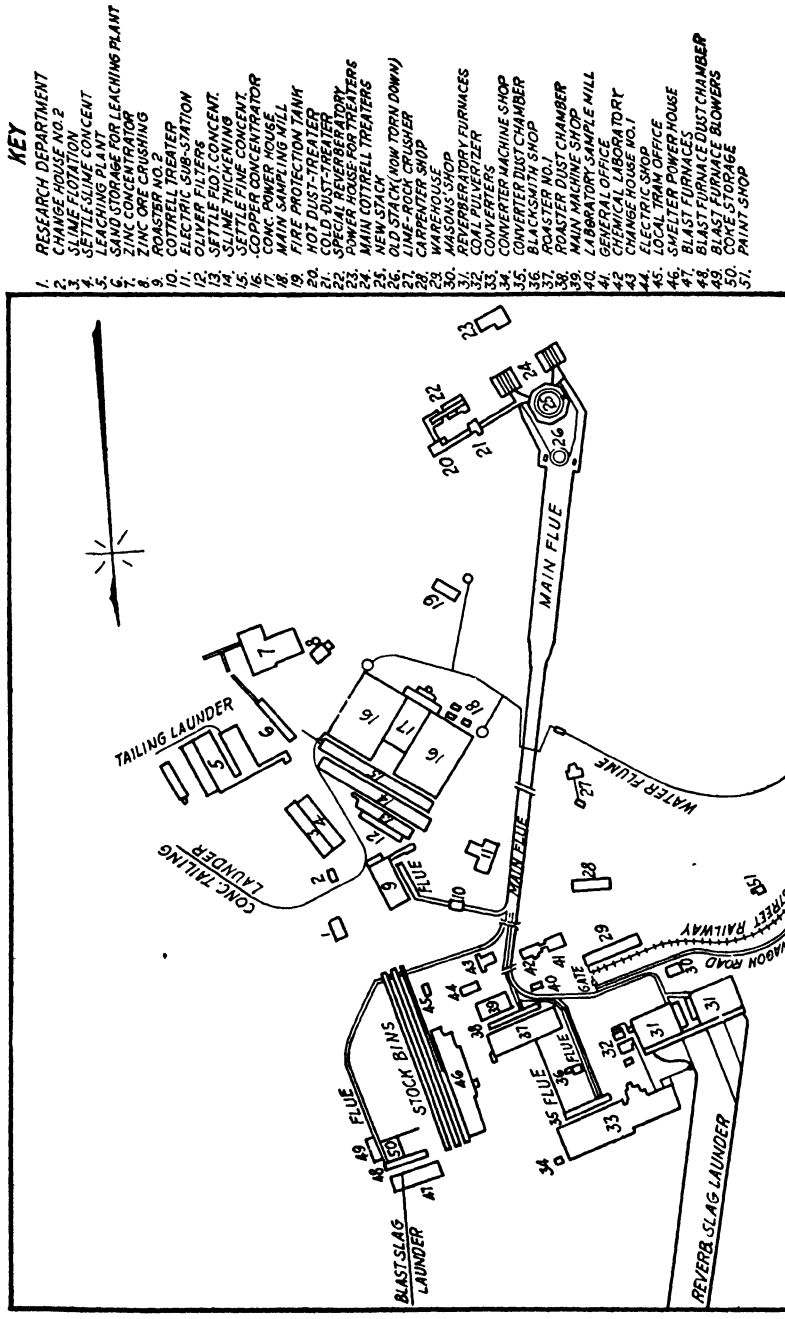

FIG. 173.—Flue system at Anaconda.

to note how the curves for dust loss follow in general the curve for volume of gases and weight of ore charged.

148. Flue System at Anaconda.—The arrangement of the flue system at Anaconda is clearly seen in the plant diagram (Fig. 173). The dust- and fume-producing operations are No. 9, roaster plant No. 2, which has an enlarged flue or dust chamber adjacent to the furnace building, from which the gases pass through a Cottrell treater and thence to the main flue; No. 31, reverberatory plant, where the waste heat boilers act as primary dust catchers, from which the gases pass through a connecting flue to the main flue; No. 33, converter plant, from which the gases pass into a dust chamber (No. 35), thence by flues to the main flue; No. 37, roaster plant No. 1, from which the gases enter a dust chamber (No. 38); No. 47, blast-furnace department, not in operation at present, which is also provided with a dust chamber (No. 48) and a long flue connecting with the main flue system. All subsidiary flues are of brick, most of them being 20 ft. wide and 15 ft. deep. The total length is nearly a mile.

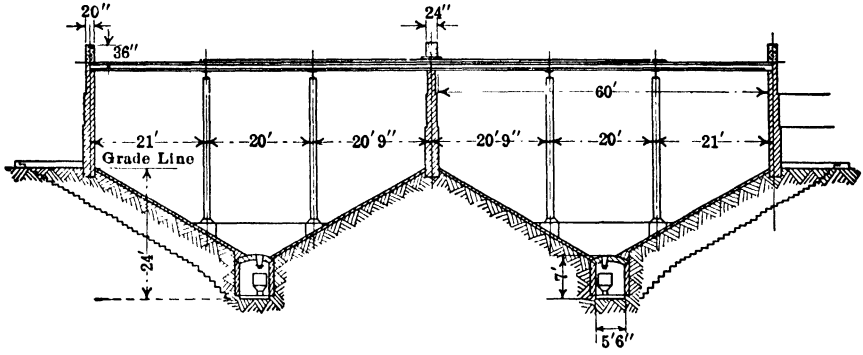

FIG. 173*a*.—Twin condensation-flue at Washoe smelter, Anaconda

The main flue rises in a straight line uphill a distance of about half a mile to the base of the stack. The total rise from the lowest furnaces to the base of the stack is about 400 ft. The first half of the main flue is 60 ft. wide and 20 ft. high above ground, with a V-shaped bottom extending 17 ft. into the ground. Below the flue is a tunnel for the removal of flue dust into cars. The last half of the main flue is 120 ft. wide and has a W-shaped bottom below ground with two tunnels for dust removal, as shown in Fig. 173*a*.

The gases from the main flue pass through a system of Cottrell precipitators and thence to the stack which is 585 ft. high, 75 ft. inside diameter at the bottom, and 65 ft. at the top and has a capacity of three or four million cubic feet of gas per minute. The walls are 6 ft. thick at the bottom and 2 ft. at the top, constructed of perforated brick set in acidproof mortar.

The total dust recovery at Anaconda under present conditions is about 300 tons per 24 hr. Of this, about 80 per cent is produced in the roasters, 17 per cent in the reverberatories, and 3 per cent in the converters. The flue system settles about 140 tons, and 160 tons are caught in the Cottrells. The dust is about 8 per cent of the material sent to the smelter.

An average analysis is as follows: Cu 5.76, SiO_2 23.6, FeO 10.1, Al_2O_3 8.0, CaO 2.4 per cent; Ag 6.76 oz., Au 0.02 oz., As 19 to 23 per cent.

The dust from the Cottrells is smelted in a special reverberatory furnace situated near the stack. The gases from this furnace are passed through a Cottrell treater, which precipitates the dust but operates at such a high temperature that the arsenical fumes pass through uncondensed. The cleaned gases are then passed through a cold treater, which precipitates the fume. The product from this treater contains about 70 per cent As_2O_3. This is subjected to a preliminary refining by being roasted in a McDougall furnace, the fume from which is condensed in three other McDougall furnaces which have been converted into arsenic kitchens or condensing chambers. This condensate contains 93 to 95 per cent As_2O_3 and is subsequently refined to 99.9 per cent As_2O_3.

Attempts to treat the main treater dust directly for As_2O_3 by roasting have thus far failed, due principally to the acid which it contains. This passes over and contaminates the As_2O_3.

149. Notes on Dust Recovery at Various Plants.—*At the International Nickel Co., Copper Cliff, Ont.*, balloon flues, wire-hung chamber, and brick chamber with baffle walls are used. The dust recovered per day is about 50 tons divided as follows: blast furnaces 40 tons, Wedge furnaces 9 tons, converter ¾ ton, reverberatories ¼ ton. At the blast furnaces 87 per cent is caught in the balloon flue and the balance in the wire-hung chamber. At the Wedge furnaces 90 per cent is caught in the balloon flue and 10 per cent in the baffle chamber. About 2.5 per cent of the total ore is recovered as flue dust. It is smelted in the reverberatories.

At the Braden Smelter, Chile, the flue system is followed by Cottrell treaters. The gases from the blast furnace and converters are combined, while those from the nodulizers are treated separately. The total dust recovery is about 81 tons per 24 hr. Of the total ore treated in the nodulizers, 33.2 tons, or 5.4 per cent, are recovered as dust. Of this, 24.9 tons are settled in the flues and 8.3 tons recovered in the treaters. Of the total ore treated in the blast furnaces and converters, 47.6 tons, or 6.45 per cent, are recovered as dust. Of this, 40.0 tons are settled in the flues and 7.6 tons recovered in the treaters. The heavy, gravity flue dust is smelted directly in the converters, the remainder is mixed with the concentrates and nodulized.

At the United Verde Smelter, Clarkdale, Ariz., dust is recovered in flues, dust chambers, and Cottrell treaters. About 3 per cent of the total ore treated is recovered as dust. About half the dust comes from the roasters and half from the smelting operations. About 70 per cent of the dust is settled in the flues and dust chambers and 30 per cent is recovered in the Cottrell treaters. The dust is smelted in the reverberatories.

At the Copper Queen Smelter, Douglas, Ariz., gravity settling alone in flues is used. The total dust recovery is about 107 tons per 24 hr., divided as follows: about 27 tons from roasters and reverberatories, or 3 per cent of the ore treated; about 13 tons from the converters, or 0.9 per cent of the charge; 67

tons from the blast furnaces, or 8.0 per cent of the charge. The dust is all mixed with the reverberatory charge.

At the Tacoma Smelter, Tacoma, Wash., dust chambers and Cottrell treaters are used. About 45 tons, or 5.6 per cent of the ore treated, are recovered as dust. Of this, about 46 per cent is caught in the Cottrell treaters. The dust is smelted in the reverberatories.

At the Hayden Smelter, Hayden, Ariz., the roaster department is equipped with dust chambers and Cottrell treaters. The converter plant is equipped with dust chambers. The total dust recovery for 24 hr. is 14 tons, of which 10 tons come from the roasters and 4 tons from the converters. The gases from the roaster Cottrells pass into the reverberatory flue. The roaster chamber settles 3 tons of dust and the Cottrells 7 tons. The dust recovery is 1½ per cent of the total ore treated.

At the El Paso Smelter, El Paso, Tex., dust chambers only are used. The dust recovery is 11 tons per 24 hr., of which 24 per cent comes from the reverberatories, 32 per cent from the roasters, and 44 per cent from the converters. The reverberatory and roaster dust is returned by air lift to the roasters. The dust from the converters is recharged.

At the Garfield, Utah, Smelter dust chambers and Cottrell treaters are used. The total dust recovered is 102.2 tons per 24 hr., or 4.5 per cent of the ore treated. This is divided as shown in Table LXII.

TABLE LXII.—DISTRIBUTION OF DUST AT THE GARFIELD SMELTER

	Flue system, tons	Cottrells, tons	Total, tons
Reverberatories	14.4	2.7	17.1
Roasters	33.2	24.2	57.4
Converters	19.1	7.5	26.6

The converter dust which is high in lead is shipped to the lead plant and that high in copper is returned to the converters. The reverberatory and roaster dust is smelted in the reverberatories.

At the International Smelter, Miami, Ariz., the dust from the reverberatories is caught in the boilers, a dust chamber, and a hopper-bottom flue. The boilers are cleaned out daily, while once a month is sufficient for the dust chamber and flues. The dust recovery per 24 hr. is 8.4 tons from the reverberatories, 3.0 tons from the converters, and 12.6 tons from the dryers, a total of 24 tons, which is 2.38 per cent of the ore treated. All flue dust is returned to the furnaces in which it originated.

150. Table of Flue Dust Analyses.—The analyses of dust from different plants is given in Table LXIII.

TABLE LXIII.—SOME FLUE DUST ANALYSES

Plant	Source of dust	Analysis, per cent							Ounces per ton	
		Cu	S	SiO_2	FeO	CaO	Al_2O_3	Pb	Ag	Au
Nevada Consolidated, McGill, Nev.	Roasters	8.01	14.5	35.1	19.8	1.9	12.5			
	Reverberatories	10.47	5.7	29.5	20.3	0.1	8.2			
	Converters	62.33	13.4	5.8	8.7	0.2	1.7			
A. S. & R., Garfield, Utah	Roasters	14.0	11.3	23.6	16.2	2.1	....	0.4	4.8	0.07
	Reverberatories	7.8	6.6	25.8	11.0	6.4	....	6.1	6.7	0.10
	Converters	32.1	12.0	5.3	6.7	0.3	....	20.3	25.1	0.19
A. S. & R., Hayden, Ariz.	Roasters	13.0	12.6	26.6	12.8	2.0	6.1			
	Converters	57.0	11.8	11.6	12.4	0.5	1.8			
A. S. & R., El Paso, Tex.	Roasters	10.5	....	....	...	.	....	0.3	5.9	0.03
	Reverberatories	8.6	....	....	...		....	1.9	6.5	0.03
	Converters	50.3	....	....	..		...	3.6	18.7	0.06
Phelps Dodge, Douglas, Ariz.	Roasters and reverberatories	9.5	17.5	24.0	12.2	1.8	8.8		2.5	0.04
	Blast furnace	7.5	13.5	20.0	35.2	2.5	7.8		2.4	0.02
	Converters	26.0	9.4	30.5	17.2	1.2	7.8	.	10.0	0.10
Calumet & Ariz.	Roasters	6.6	13.0	19.3	33.2	3.8	7.0	.	2.48	0.078
United Verde, Clarkdale, Ariz.	All departments	6.5	12.5	18.5	25.3	1.6	7.4	..	3.1	0.66
International Smelter, Miami, Ariz.	Dryers	20.3	9.14	28.2	7.9	1.3	12.3	...	0.55	Trace
	Reverberatories	17.1	8.0	17.6	12.8	1.2	7.8	...	1.45	0.018
	Converters	24.4	16.5	4.2	7.6	...	1.3	...	3.88	0.008
Braden Copper Co., Braden, Chile	Nodulizer, gravity	25.5	23.9	14.2	12.3	0.9	7.3			
	Nodulizer, Cottrell	25.4	14.8	19.8	16.5	1.5	10.9			
	Blast Furnace and converter gravity	28.4	13.7	15.5	26.4	1.3	7.6			
	Blast Furnace and converter, Cottrell	28.6	12.8	14.7	20.6	1.2	7.5			
Anaconda Copper Co., Anaconda, Mont.	All departments	5.8	6.3	23.6	10.1	2.4	8.0	..	6.76	0.02

151. Types of Cottrell Treaters.—There are three general types of Cottrell treaters which, in the order of their development, are the pipe treater, the plate type, and the wire type.

At the International Smelter, Miami, Ariz. (Fig. 174), the pipe treater is used. The roasting furnaces are operated as dryers and the treater connected with this department is designed to handle gases low in sulphur but high in moisture, low in temperature, and high in dust. It consists of six sections containing in all 240 treater tubes 13 in. internal diameter and 15 ft. long. The discharge electrodes consist of No. 19 B. & S. gage, nichrome wire. With five dryers running, the total volume of gas consists of 221 cu. ft. per second with a velocity of 5.4 ft. per second through the tubes. Tubes are rapped down once every 2 hr.

The treater for converter gases consists of 12 sections, each with 64 tubes of the same size as in the dryer section. The discharge electrodes consist of ⅛-in. steel chains. The tubes are rapped down every hour. The bottom of the treater is a series of hoppers, under which an electric larry car is run for receiving the dust.

At the Washoe Smelter, Anaconda, Mont., a modified plate-type treater is in use at the base of the main stack.[1] A photograph of the arrangement is shown

[1] BROWN, *Mining Sci. Press*, 1918, CXVI, 895.

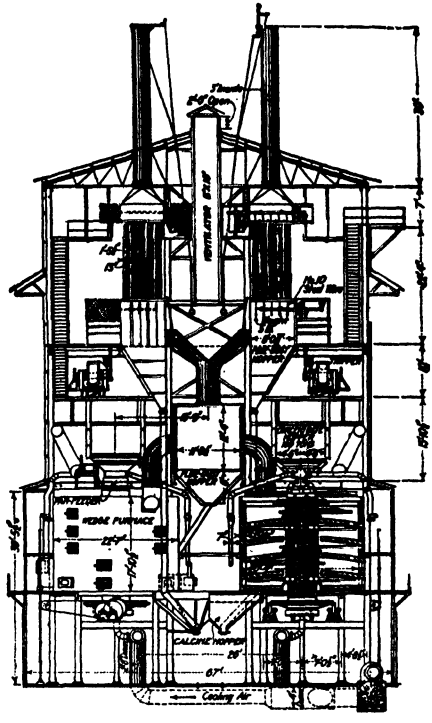

FIG. 174.—Cottrell pipe treaters at the International Smelter (Miami).

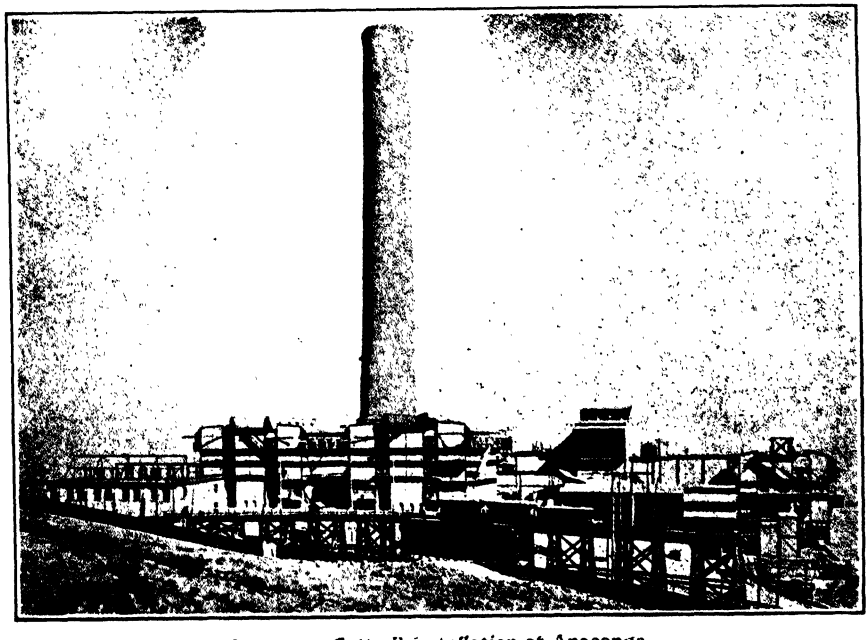

FIG. 175.—Cottrell installation at Anaconda.

in Fig. 175. The main flue near the stack is divided into two flues each 20 by 50 ft., and one passes to each side of the stack (Fig. 173), leading the gases to 20 treaters of the Anaconda box type. These consist of corrugated iron plates about 24 by 21 ft. placed in parallel and hung about 12 in. apart. Between the

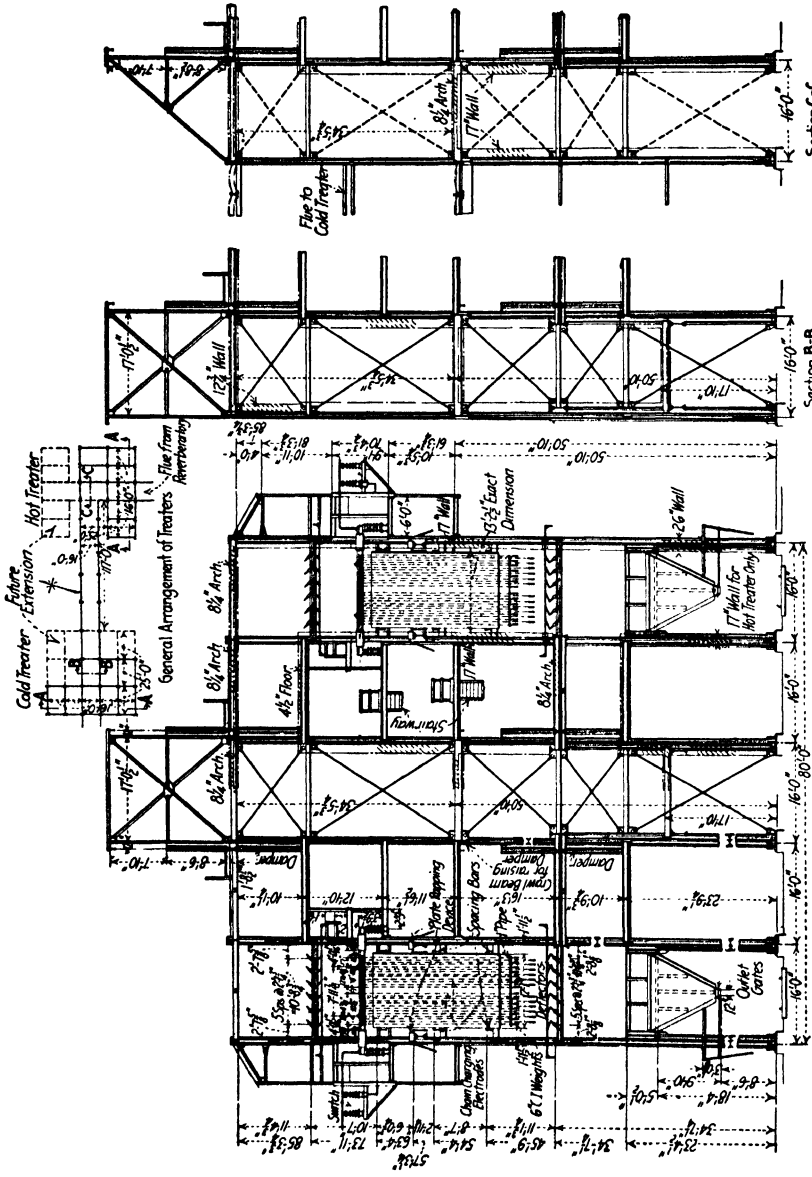

FIG. 176.—Arrangement of Anaconda Cottrell treaters.

plates are hung chains, properly insulated, and charged with 60,000 volts. The chains form the negative pole, while the grounded plates form the positive pole. The temperature of the entering gases is about 140° C., and as they enter

the stack about 110° C. About 80 per cent of the solids in the gases are precipitated. The current to each section of the treaters is cut off in turn to allow cleaning of the plates.

The arrangement of the plates and chains is shown in Fig. 176.

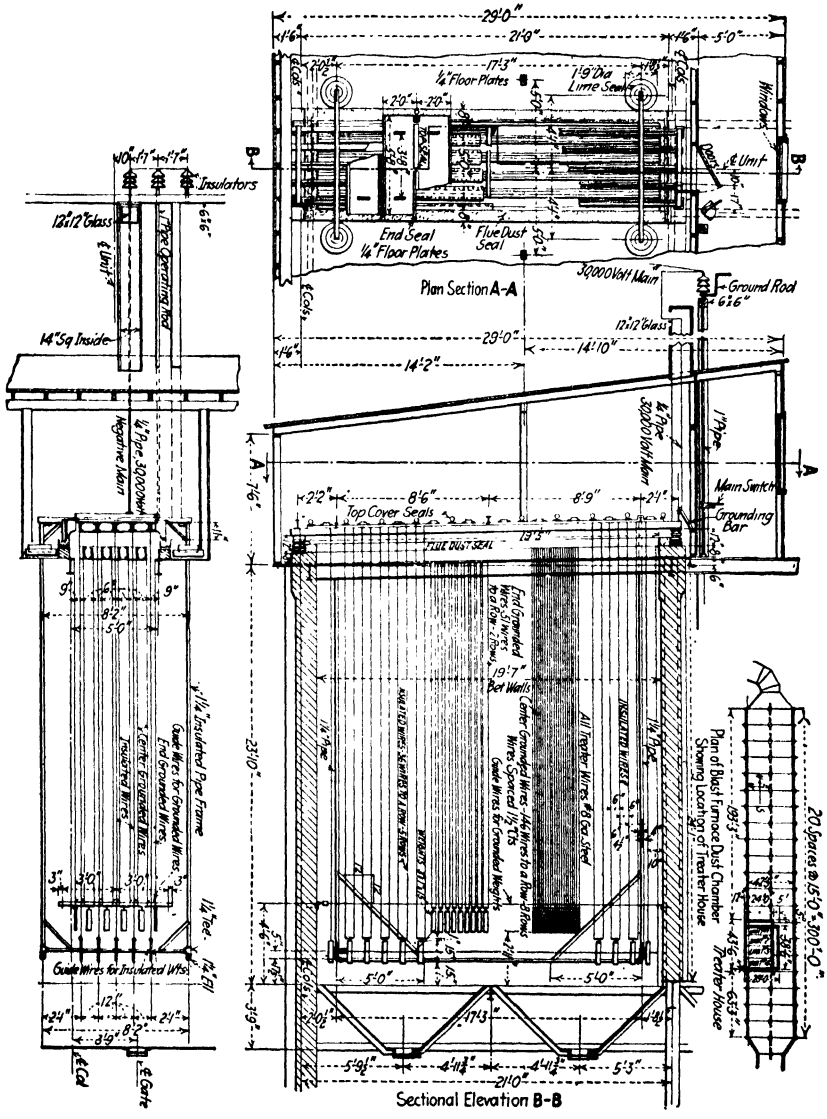

FIG. 177.—Arrangement of wires in the Garfield Cottrell treater.

At the Garfield Smelter, Garfield, Utah, an all-wire type of treater has been developed. This consists of rows of wires alternately positive and negative, hung in a large dust chamber. The arrangement is shown in Fig. 177.

V. The Sulphide Copper Smelting Plant

152. General Arrangement of Plant.—The general characteristics of modern smelting plants treating sulphide copper ores are the large scale of operations demanding mechanical handling of materials in different departments and the precautions being taken to prevent loss of heat and valuable materials.

The plan of the *Washoe Smelter* at Anaconda is given in Fig. 173. Formerly there was a sufficient supply of high-grade lump ore at this plant to keep several blast furnaces in operation. At present all ore goes through the concentrators, roasters, and reverberatories. The matte from the reverberatories is hauled in ladle cars to the converter department equipped with 20-ft. Great Falls type converters. The blister copper from the converters is poured into ladles and transferred by a crane to reverberatory casting furnaces, where, after refining,

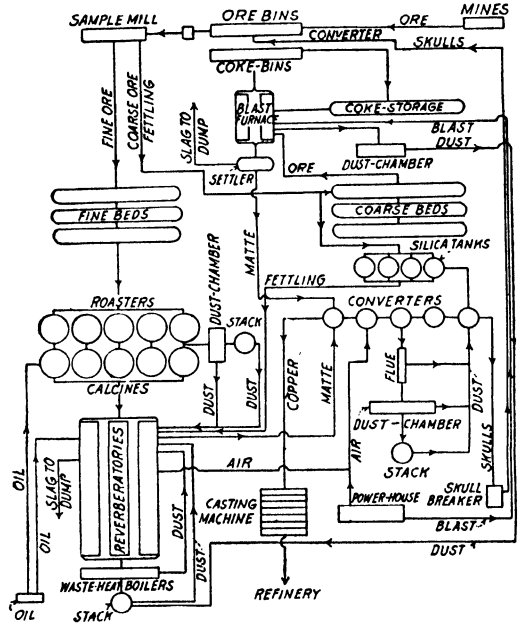

Fig. 178.—Flow sheet at the Calumet and Arizona smelter.

it is cast into anodes on a straight-line casting machine and shipped to Great Falls for electrolytic refining.

The haulage about the plant is by compressed-air locomotives working under a pressure of 800 to 900 lb. These are satisfactory except in winter, when some trouble is experienced at times.

The flow sheet of the *Calumet and Arizona Smelter, Douglas, Ariz.*,[1] is given in Fig. 178. One feature of this plant is the ore-bedding system,[2] which is

[1] De Kalb, *Mining Sci. Press*, 1918, cxvii, 181.

[2] Woodbridge, *Eng. Mining J.*, 1906, lxxxii, 624.
Messiter, *Mining Sci. Press*, 1907, xcv, 528; 1909, xcviii, 361.
Herrick, *Mines Minerals*, 1909–10, xxx, 65; Pamphlet, Robins Conveying Belt Co., New York.
Editor, *Eng. Mining J.*, 1912, xciii, 682.
Wierum, *Eng. Mining J.*, 1913, xcvi, 435.

similar to the ones used at the Tennessee Copper Co. and at Cananea. A photograph of the Cananea installation is given in Fig. 179.

FIG. 179.—Overhead skeleton structure of Dwight Messiter ore-bedding system, Cananea.

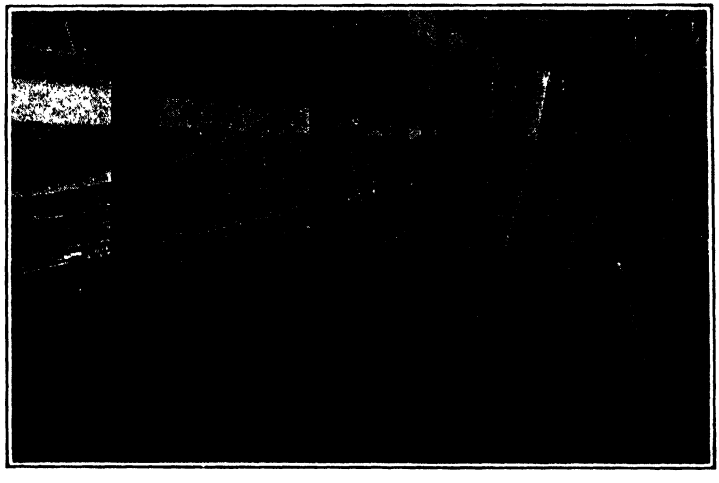

FIG. 180.—Bedding bins at the United Verde Extension smelter.

As a comparison, the bin system of bedding at the plant of the United Verde Extension Co., Clarkdale, Ariz., is given in Fig. 180.

The United Verde Extension Smelter at Jerome, Ariz.[1]—The general layout is shown in Fig. 181 and a section through the smelter is given in Fig. 182. The

[1] NICHOLS, *Eng. Mining J.*, 1918, CVI, 689.

general equipment consists of one 48- by 320-in. blast furnace, two 25-by 120-ft. reverberatories, six 21½-ft. six-hearth Wedge furnaces, and three 12-ft. Great Falls type converters. The ore, after crushing, is carried to concrete bins for coarse and fine ore of 5,000 tons capacity. The coarse ore goes by belt conveyor

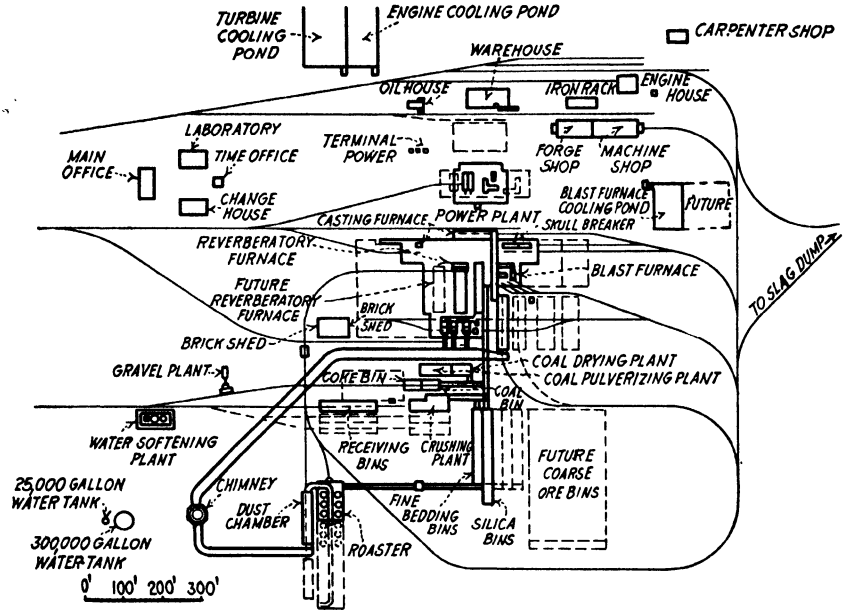

FIG. 181.—United Verde Extension smelter.

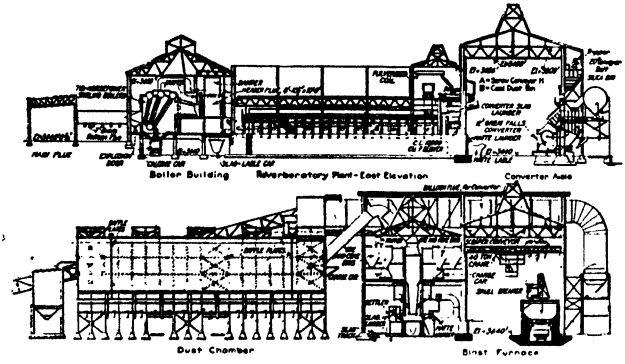

FIG. 182.—Section through United Verde Extension smelter.

to the blast furnace, which is served by charge cars similar to those at the Calumet and Arizona plant (page 121). The normal capacity of the blast furnace is 600 tons per day. The slag is handled by electrically tilted cars of 225-cu. ft. capacity drawn by 24-ton electric locomotives.

The fine ore is taken from the bedding bins by belt conveyor to the roasting plant. After being calcined, the ore is taken to the reverberatory furnaces in 15-ton, electrically driven calcine cars similar to those used at the International Smelter at Miami (page 100).

The reverberatories are of 600 tons capacity per day and are coal-dust fired. The slag is handled by cars similar to the blast-furnace-slag cars. The furnaces are equipped with Stirling waste-heat boilers.

In the converter plant a 40-ton electric traveling crane with two auxiliary hoists serves the converters and copper casting machine. The casting machine is of the straight-line type.

The converter and blast-furnace gases are discharged into a dust chamber 1,400 sq. ft. in section and 144 ft. long elevated above the ground to permit the accumulated dust to be drawn directly into the cars. From here the gases enter the main brick flue, which is 16 by 20 ft. Later the flue receives the flues from the reverberatory furnaces and is enlarged to 25 by 20 ft. The total length of the main flue is 976 ft. The roaster gases are treated in a separate dust chamber 1,000 sq. ft. in section and 144 ft. long, followed by a 16- by 16-ft. brick flue leading 360 ft. to the stack. The stack is of brick and is 425 ft. high by 30 ft. inside diameter. It is built on a hill 110 ft. above the plant site.

At the Copper Queen Smelter, Douglas, Ariz.,[1] the handling of ores departs from general practice, but the method is said to be very economical. In the yard there are five ore pits, 40 ft. wide and 11 ft. deep; four are 825 ft. long and one 1,000 ft. Direct-smelting ore and concentrates from the mill are brought in cars along the upper edges of the pits and dumped over the side, thus producing a uniform bed. The ore is removed from the pits by means of steam shovels, loaded into cars, and taken to the smelting furnaces.

B. SMELTING OXIDE COPPER ORES

153. Smelting Oxide Copper Ore in General.[2]—Oxide copper ores rich in copper used to be smelted in Arizona and New Mexico in water-jacket blast furnaces, having internal crucibles, for black copper (96 per cent Cu), and waste slag, with from 1.5 to 2.5 per cent Cu.[3] The industry started about 1881, when the cost of coke was too high to permit charging enough fuel to make clean slags. Smelting the old slag dumps later on with sulphide ore showed[4] that in some instances the copper content exceeded 2.5 per cent, *viz.*,Globe 3.5, Morenci 4.5 per cent. At present, rich oxide ore is mixed with sulphide material and smelted for matte. which is converted; poor oxide ore is being leached.

Attempts have been made[5] to reduce to the metallic state the copper from a mixture of rich oxide ore and fuel by passing it through an inclined revolving

[1] WOODBRIDGE, *Eng. Mining J.*, 1906, LXXXII, 242; DOUGLAS, *Trans. Inst. Mining Met.*, 1912–13, XXII, 532.

[2] DOUGLAS, *Min. Res.*, U. S. Geol. Survey, 1882, p. 261; 1883–84, p. 397; *Trans. A. I. M. E.*, 1909, XL, 422; WENDT, *op. cit.*, 1886–87, XV, 25; AUSTIN, *Mining Sci. Press*, 1908, XCVI, 196.

[3] CHANNING, *Trans. A. I. M. E.*, 1910, XLI, 885.

[4] DOUGLAS, *Trans. A. I. M. E.*, 1909, XL, 422.

[5] Experiments of CASPARI and FLEGEL, *Metall u. Erz*, 1913, X, 253.

cylinder heated internally from a fireplace at the lower end, and then separating the globules of copper by mechanical concentration. Such work can give only a small yield, and may be justified in regions where other processes are not feasible.

154. Early Work in Arizona.—Some of the leading facts of the former Arizona practice are given in Tables LXIV to LXVII. The blast furnaces were water-jacketed throughout; most of them were circular in cross-section, only a few rectangular. In order to prevent the black copper from chilling, all furnaces had internal crucibles from which slag was tapped at intervals into slag pots and black copper into pig molds holding about 250 lb.

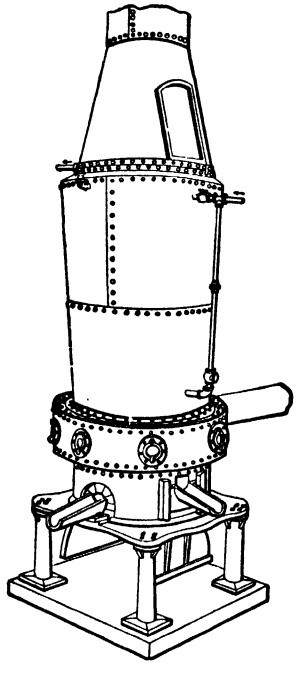

FIG. 183.—Arizona copper blast-furnace.

The Arizona copper furnace is shown in Fig. 183 and a pig mold in Fig. 184. The furnace, 36 in. in diameter at tuyères, 54 in. at throat, and 6 ft. working height, has the form of an inverted cone resting on a cast-iron bed plate supported by four hollow cast-iron columns. It is water-jacketed from the throat to below the wind box; the water space is 9 in. wide at the bottom and 4.5 in. at the top. The outer shell extends downward below the jacket and forms the side wall of the crucible. The water-inlet pipe, 2.5 in. in diameter, is usually at the center, and not both near bottom

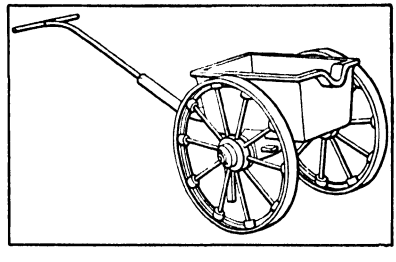

FIG. 184.—Copper mold.

and top as seen in the figure. The feed water, under a pressure of 8 or 10 ft., strikes a deflecting plate so as not to impinge upon the inner shell; the overflow pipe, 2.75 in. in diameter, is tapped into the top of the jacket; a 36-in. furnace takes 950 gal. water per hour, a 42-in. 1,200 gal., a 48-in. 1,500 gal. The crucible is 24 in. deep; its bottom is formed by two cast-iron plates hinged to the bed plate; the lining reaching to the tuyères is brasque, or sand and burned clay, or quartz and slag. The removable air box, 10 in. above the slag tap, has six bronze tuyère openings; opposite each there is on the outer side a peep and poking hole closed by a cap provided with a mica shield. The feed door is in the hood ending in the chimney, the blast pipe ends at the wind box, the metal tap is 14 in. below the slag tap.

Walker and Murphy[1] surrounded the crucible with an air jacket to keep the walls cool and to warm the blast. This plan has not been adopted by others, for obvious reasons.

The cost of smelting a ton of ore in 1892–1894 at the works of the Old Dominion Copper Co. at Globe, Ariz., with two 36-in. blast furnaces is given by Austin[2] as $8.96 per ton yielding 260 lb. black copper.

TABLE LXIV.—ANALYSES OF ARIZONA OXIDE COPPER ORE

Locality	Cu	SiO_2	FeO	MnO	CaO	Reference
Longfellow	38.80	11.15	10.40	....	....	WENDT, *Trans. A. I. M. E.*, 1886–87, XV, 25
Longfellow	21.67	17.25	.....	7.43	....	
Longfellow	17.17	26.80	13.76	7.49	....	
Coronado	21.95	48.90	12.09	....	....	
Coronado	11.17	67.00	8.88	....	....	
Old Dominion	15.17	35.3	28.7	....	22.2	AUSTIN, *Mining Sci. Press*, 1908, XCVI, 196.

TABLE LXV.—ARIZONA BLAST FURNACES FOR OXIDE COPPER ORE

Smelter	Tuyère section, inches	Throat section, inches	Working height, feet	Tuyères			Slag tap above matte tap, inches	Charge		Fuel, per cent of charge	Blast pressure, ounces	Slag, Cu, per cent	Reference
				No.	Diam., inches	Above slag tap, inches		In 24 hr., tons	Cu, per cent				
Copper Queen	36 diam.	54 diam.	6.0	6	3 + 5	10	14	47	12.9	17.0	10	1.27	WENDT
Old Dominion	36 diam.	.	.	6	3	.		56	17.3	13.2	10	....	DOUGLAS
Bisbee	42 diam.	54 diam.	6.5	6	4 + 5	8	12	50	...	15.1	8	...	PETERS
Detroit	33 × 66	54 × 87	10 5	14	2.75	6	14	85	11 8	15.2	12	1.11	HOWE
United Verde	36 × 90	48 × 90	9.0	10	3.50	11	24						

TABLE LXVI.—ANALYSES OF ARIZONA BLAST-FURNACE SLAGS

Smelter	SiO_2	FeO	MnO	CaO	MgO	Al_2O_3	Cu	CuO	S	Reference
Copper Queen	24.67	44.85	0 39	10.92	1.75	15.57	2.10	....	0.28	WENDT, *Trans. A. I. M. E.*, 1886–87, XV, 25.
Copper Queen	30.06	53 36	11.10	...	....	.. –	0.15	1.02	..	
Detroit	34.34	32.27	8.05	10.13	2.30	11.64	...	...	..	
Detroit	29.50	37.08	1.13	9.02	7.44	14.07	1.82	....	0.30	
Prince	27.16	34.62	0.49	17.42	3.51	14.70	1.64	....	0.33	
Old Dominion	27.23	51.30	1.65	5.14	2.54	5.22	...	3.76	....	
United Verde	35.70	37 89	....	12.98	0.75	8.29	0.18	2.59	....	
Bisbee	28.0	29.0	....	9.0	....	27.0	1.32	...	....	HOWE, "Copper Smelting," p. 78

TABLE LXVII.—ANALYSES OF ARIZONA BLACK COPPER

Smelter	Cu	S	Fe	As	Sb	Bi	Ins.	Reference
Prince	95.00	0.44	4.23	.....	.....	.....	0.51	WENDT, *op. cit.*
Old Dominion	98.91	0.64	0.12	0.057	0.008	0.010	0.065	AUSTIN, *Mining Sci. Press*, 1908, XCVI, 196.
Old Dominion	98.27	0.60	0.73	0.039	0.019	trace	0.060	
Old Dominion	98.24	0.53	0.80	0.054	0.021	0.006	0.007	
Old Dominion	97.52	0.69	0.97	0.052	0.014	trace	0.180	

[1] WALKER, *Eng. Mining J.*, 1893, LVI, 619.

[2] *Mining Sci. Press*, 1908, I, XCVI, 196.

155. Smelting for Black Copper in Africa.—The operations of the Union Miniere du Haut Katanga[1] resemble in some respects the early operations in Arizona. There is very little sulphide mineral in the ore body, which consists mainly of malachite with small amounts of other oxide minerals. The ore body is estimated to contain over 68,000,000 tons of ore, averaging 6.62 per cent copper. Some of this runs 20 per cent or more. Direct smelting is practiced on ores running above 15 per cent copper. Those running 6 to 15 per cent are given a rough concentration yielding a concentrate carrying 20 to 26 per cent and tailing with 4½ to 5½ per cent, which is stored for future treatment. Fine concentrate is in part sintered preparatory to smelting. A reverberatory furnace has recently been installed to treat part of the fines.

Smelting is carried out in seven blast furnaces, three of which are 48 by 192 in., and four 44 by 240 in. The furnaces are water-jacketed throughout. The height from the tuyères to the feed floor is 18 ft., with a 14 in. side bosh. There are 20 4-in. tuyères to a side in the larger furnaces. Giroux hot tops are used for warming the blast. The copper is recovered in the form of black copper. A small amount of matte is produced, due mainly to the sulphur in the coke. The slag flows continuously from one end of the furnace and the metal is tapped periodically from the other end through a lower spout.

The coke is produced in the company's own ovens, using coal brought from Rhodesia.

The present copper output is about 150,000,000 lb. per year, which is shipped to Belgium or the United States for refining.

The company is planning to install a sulphuric acid leaching plant, which may in time displace the smelting operations.

C. SMELTING NATIVE COPPER ORE[2]

156. The Ore.—The discussion is confined to the smelting of Lake Superior ore (§ 45). This is passed through ore-dressing works, the products of which are treated, with some mass copper coming direct from the mines, in four smelting plants, *viz.*, the Calumet & Hecla Mining Co., Hubbel, Mich.; the Quincy Mining Co., Ripley, Mich.; the Lake Superior Smelting Co., Dollar Bay, Mich. (closed; may not reopen); and the Michigan Smelting Co., Houghton, Mich. The product of the ore-dressing works, called "mineral," contains three grades of material: barrel work, headings, and grades. The smelting works treat:

1. *Mass.*—Pure copper with adhering rock, sorted at the mine, varying in weight from a few pounds to several tons; Cu 70 ± per cent.

2. *Barrel Work.*—Pure material, too large to go into mill, sorted at the mine and the mill (as the rock is fed to the stamps), consisting of pieces orange size and smaller; Cu 65 to 75 per cent.

[1] *Eng. Mining J.*, 1916, CII, 658; *Mineral Ind.*, 1916, XXV, 221; WHEELER, *Mining Met.*, 1924, V, 55.

[2] EGLESTON, *Trans. A. I. M. E.*, 1880–81, IX, 678; DOUGLAS, *Min. Res.*, U. S. Geol. Survey, 1882, 259; COOPER, *Proc. Lake Superior Mining Inst.*, 1901, VII, 44; RICKARD, *Eng. Mining J.*, 1904, LXXVIII, 984; also "The Copper Mines of Lake Superior," McGraw-Hill Book Co., Inc., New York, 1905, pp. 142–151; WHITE, *Eng. Mining J.*, 1905, LXXIX, 842; AUSTIN, *op. cit.*, 1906, LXXXI, 83; CONANT, *School Mines Quart.*, 1911, XXXII, 285.

3. *Headings.*—Pieces of clean copper, egg size, taken from the stamp mortar; Cu 65 to 85 per cent.

4. *Grades.*—Concentrates varying from slime to walnut size; Cu 30 to 70 per cent.

The average of the four classes of materials is about 70 per cent Cu.

The proportion which each of these four classes of materials forms varies with the character of the deposit, whether conglomerate or amygdaloid, and with the practice of the concentration plant. In Table LXVIII are given two examples from the Michigan Smelting Co. for 1906 and 1911. Data from some of the other works, which are not for publication, are similar.[1]

TABLE LXVIII.—PROPORTION AND COPPER CONTENT OF SMELTING MATERIAL OF THE MICHIGAN SMELTING CO.

	1906		1911	
	Per cent., total	Per cent., Cu	Per cent., total	Per cent., Cu
Mass	11.5	68	5	70
Barrel work	6.2	68	5	65
Headings	15.1	90	30	85
Grades	67.2	68.72	60	50
Total and average	100.0	71.82	100	62.25

157. Process.—The smelting process is essentially an oxidizing fusion in a reverberatory furnace, with or without the addition of some limestone as flux, in which the gangue is scorified and the slag skimmed as fast as it is formed. The oxidizing smelting is followed by a refining of the copper, either in the same or in another furnace into which the metal has been tapped. The refined copper is ladled or cast into commercial forms or into anodes. The reverberatory-furnace ore slag, which under older practice contained Cu 12 to 15, SiO_2 40, FeO 16, CaO 11, MgO 5, Al_2O_3 13 per cent, was crushed and smelted with the necessary flux (limestone) in a blast furnace in which the anthracite (one-half to four-fifths of the whole fuel) charged is intended to serve mainly as a reducing, and the coke (one-fifth to one-half of the whole) mainly as the heat-producing, agent. All smelters are now endeavoring to make a slag in the reverberatories sufficiently clean to go to the dump direct. This is accomplished by mixing coal with the charge to reduce the oxidized copper, together with iron ore and limestone and silica, if necessary, to produce a suitable slag. At the Quincy smelting works the charge is bedded. At the Michigan smelter it is mixed in a rotary mixer. The slags produced by this treatment run 0.75 to 1.25 per cent Cu. Just before rabbling a small amount of slag is raked off, which may be rich enough to re-treat. The refining slags, Cu 30 to 35 per cent, sometimes are added to the ore-smelting charges. The "cupola copper" of the blast furnace is tapped into molds to form blocks weighing 200 to 400 lb., and refined. The refining is usually carried on in a special furnace, as the cupola copper is impure (Cu 94 ± per cent).

[1] PARMELEE, "Quincy Smeltery," *Met. Chem. Eng.*, 1913, XI, 122.

The waste slag (Cu 0.75, SiO_2 40, FeO 20, CaO 16, Al_2O_3 14 per cent) is run through brick-lined forehearths either into slag pots, or is granulated, and goes to the dump. With the exception of slime concentrates, all the material received by a smelter goes straight into the reverberatory smelting furnace; the slimes are agglomerated for blast-furnace treatment, either by fusion in a reverberatory furnace, or by briquetting.

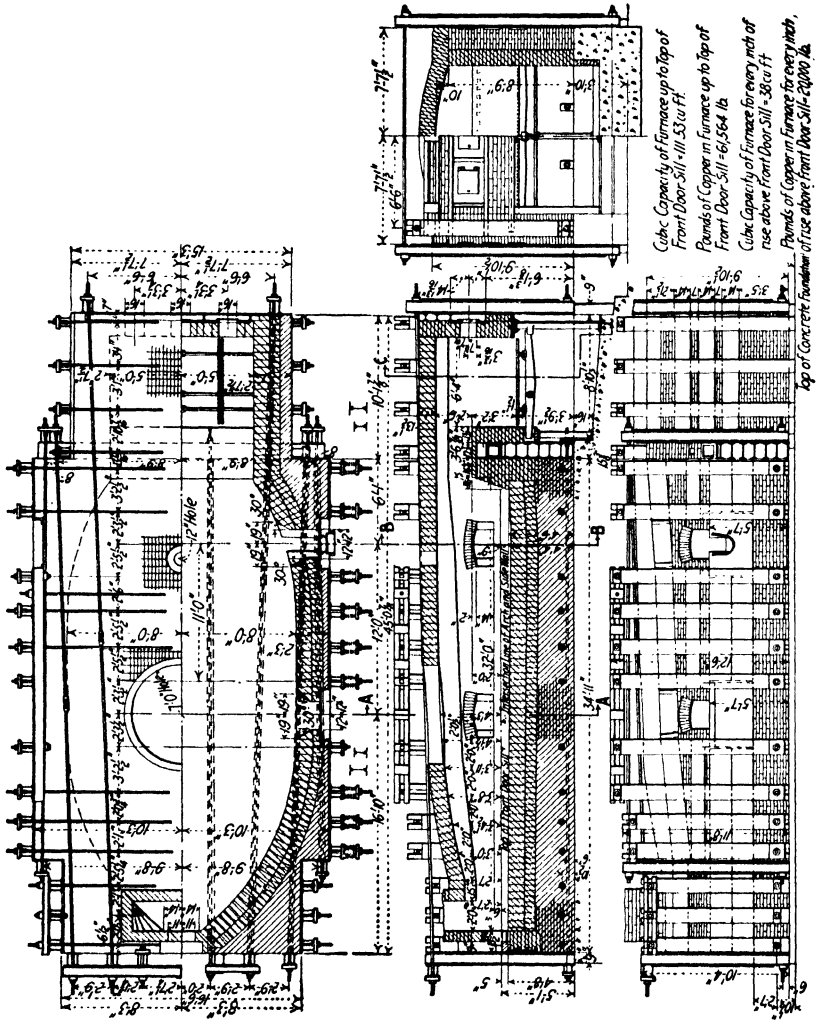

FIGS. 185–188.—Smelting furnace for native copper.

158. The Reverberatory Furnace.—The reverberatory smelting and refining furnaces have the general form of the English reverberatory smelting furnace; the main difference is that the hearth slopes from the fire bridge to the flue, beneath which the refined copper is taken out either by ladling or by allowing

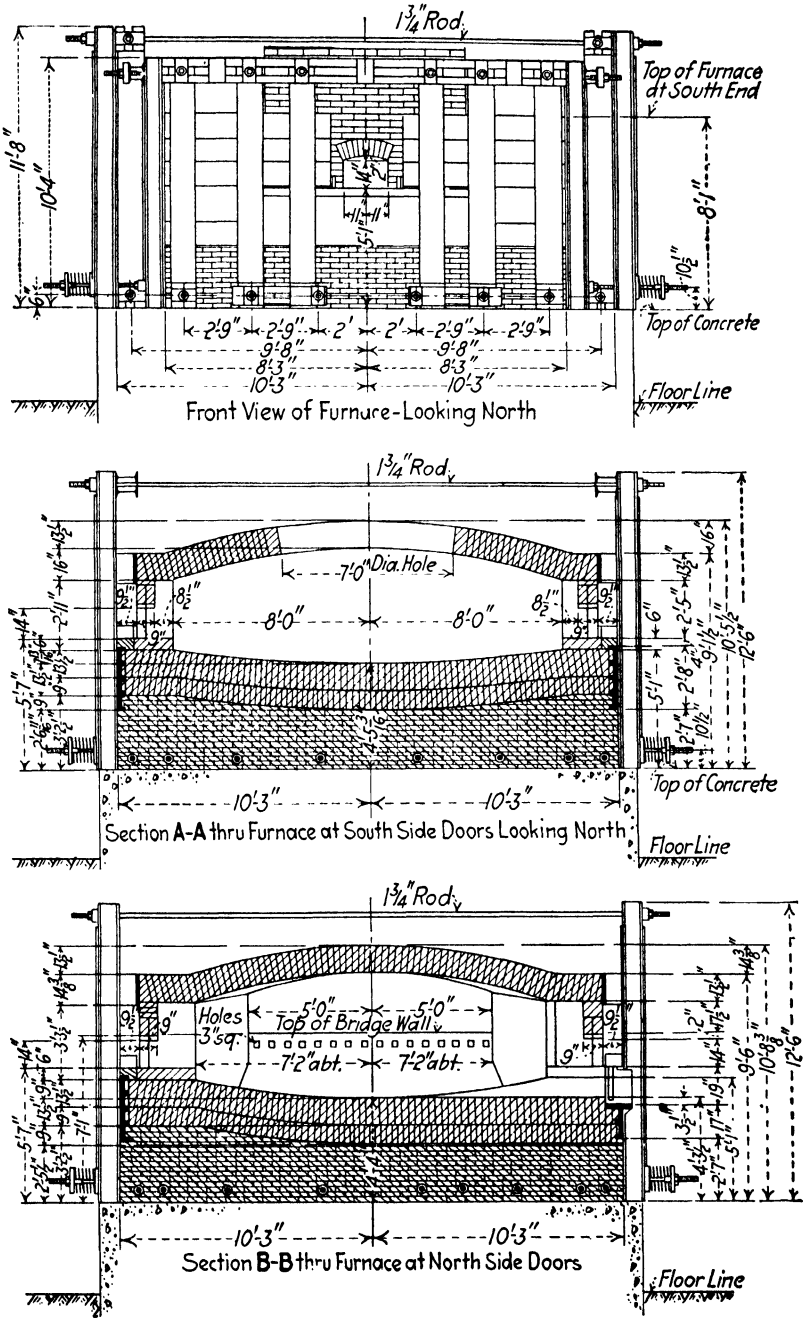

FIGS. 189–191.—Smelting furnace for native copper.

it to run into a casting ladle. In furnaces treating mass copper, part of the roof can be raised by a crane and swung to one side to permit charging of the mass. Large pieces of mass copper, which are of less frequent occurrence than formerly, are often put aside until the roof of a furnace has to be renewed, when they are lowered onto the uncovered hearth.

The fire bridge of a reverberatory furnace, as well as the roof above it, are provided with ports to admit the necessary air to the hearth.

The reverberatory furnace used forty years ago had a capacity of from 7 to 9 tons of copper; the hearths were 7 by 12 and 8 by 14 ft., and the respective fire boxes 36 by 48 and 42 by 42 in. The capacities were later increased to 20 tons per day with a hearth 11 by 14 ft. and a fire box 4 by 4 ft.; in recent years furnaces of larger capacities have been erected. A further improvement is the use of waste-heat boilers for utilizing the heat in the waste gases.

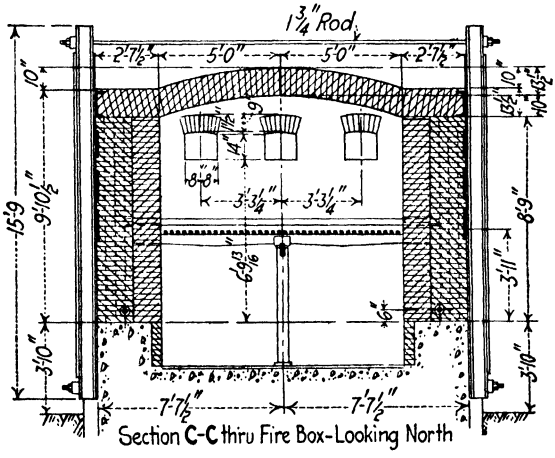

FIG. 192.—Smelting furnace for native copper.

The dimensions of some reverberatory furnaces and the work done in them at Lake Superior are given in Table LXIX. The Michigan, and Calumet and Hecla figures are reproduced from the first edition. The Quincy figures are 1924.

The furnace of the Quincy Smelting Co., shown in Figs. 185 to 192, will serve as an example of modern reverberatories for native copper. The brick bottom shown in the sketch is covered with about 6 in. of silica sand, which is fritted in place in the usual way. In some furnaces, brick bottoms are replaced by all-sand bottoms 18 in. thick. These are made in three layers 6 in. thick. The sand used for this purpose is fine and easily fritted. The procedure is to charge sufficient sand for the first layer, heat it at a low temperature to dry and calcine it thoroughly, spread it in the desired shape with rabbles and paddles, and heat to as high a temperature as possible without fusing the roof. The process is then repeated with the succeeding layers. In charging a new furnace, concentrates as rich as possible in copper and low in gangue are chosen.

The illustrations show the general furnace construction and require little explanation. The large opening in the top for introducing mass copper is clearly shown and also a smaller hole near the fire bridge, which is used for introducing fine concentrates, thus preventing the loss of heat resulting from opening the large hole.

TABLE LXIX.—LAKE SUPERIOR REVERBERATORY FURNACES

	Michigan[a] Smelting Co.	Calumet & Hecla Mining Co.	
		Hubbell, Mich.	Quincy Smelting Works
Length of hearth, feet, inches	23′ 3″	20′ 6″	32′ 0″
Width of hearth at bridge, feet, inches	7′ 0″	6′ 0″	10′ 0″
Width of hearth at middle, feet, inches	14′ 4″	13′ 0″	16′ 0″
Width of hearth at flue, feet, inches	0′ 11″	3′ 0″	2′ 4″
Hearth area, square feet	260	202	433
Hearth depth, inches	40″	9.5″	16″
Hearth thickness, inches	27″	12″	24″
Hearth material	Brick and fused sand	Sand	Silica brick
Hearth support	Concrete	Fire-brick arch	Brick on concrete
Grate, length, feet, inches	4′ 3″	4′ 0″	6′ 4″
Grate, width, feet, inches	6′ 2″	6′ 0″	8′
Grate, depth below top of bridge at bridge, feet, inches	3′ 10″	2′ 9″	3′ 2″
Grate, depth below top of bridge at opposite end, feet, inches	3′ 10″	2′ 9″	3′ 2″
Grate, area, square feet	26	24	50
Ratio, hearth to grate area	10:1	8.41:1	8.66:1
Roof, height above bridge, feet, inches	1′ 8″	1′ 7″	2′ 6″
Roof, height above hearth at bridge, feet, inches	5′ 6″	2′ 6″	5′ 0″
Roof, height above hearth at flue, feet, inches	0′ 6″	2′ 0″	3′ 0″
Bridge, width, feet, inches	4′ 0″	3′ 0″	3′ 6⅞″
Vulcatory (flue leading out of roof), feet, inches	2′ 4″ × 4′	4.5 sq.′	2′ 0″
Flue leading to chimney, feet, inches	2′ 4″ × 4′	(feet)	2′ 0″
Chimney, inside diameter, feet, inches	10′ for all furnaces	3′ × 3′	4′ 0″
Chimney, height, feet	250′	90′	100′
Waste-heat boiler, number, kind, horsepower	One 250-hp. Stirling	None	One Wickes 300 hp.
Charge, character, quantity	Molten copper, and cupola blocks	Mineral, mass barrel work	Mineral mass and barrel work
Charge, time of working, total hours	22		
Charge, time of charging, total hours	1		1
Charge, time of melting and raking, hours	8		8 to 10
Charge, time of fining, hours	6		6 to 7
Charge, time of poling, hours	2		3 to 4
Charge, time of ladling, hours			
Charge, time of casting, hours	4		4
Charge, time of cleaning up and recharging, hours	1		½
Charge, tons in 24 hr.	150		50
Charge, tons per square feet of hearth in 24 hr	0.6		
Charge, tons per ton coal	15		2½
Coal, ash, per cent	9		Varies
Coal, fixed carbon, per cent	54		Varies
Poles, kinds, number per charge	Hardwood 15		Maple and birch 2 cords
Charcoal, kind, pounds per charge	2,000		Hardwood 1,350 lb.
Labor, in 24 hr.	14		9 with 3 from yard while casting
Copper produced, character	Cake, ingot,	Cake, ingot, anode	Cake, wire bar, anodes, ingots and ingot bars
Copper, per cent of charge	60	50 ±	55
Copper, manner of casting	Walker machine	Hand	Walker machine
Slag, SiO_2	46		35 to 40
Fe(Mn)O	17		11 to 15
Al_2O_3	12		14 to 18
CaO	10		15 to 20
Cu	7		.26 to .88
Slag, per cent of charge	45		
Slag, disposition	Blast furnace		Refining slag to reverberatory; melting slag to waste

[a] The present (1924) furnace of the Michigan Smelting Co. is fired with pulverized coal. It treats 160 tons composite charge per 24 hr. The slag containing 0.9 per cent Cu is wasted. The copper is tapped every 24 hr. direct to the refining furnace.

In the furnace at the Michigan Smelting Co. the large hole in the roof is protected by a water-cooled copper rim, but some operators object to them because of the danger from leaks.

159. Mode of Operating.—The usual practice is to have a melting furnace to which is charged the mixture of mineral, mass, barrel work, flux, and reducing coal, together with slag from the refining furnace. This slag at the Michigan Smelter is crushed to pass ¾ in. and mixed carefully with the remainder of the charge, so that the reducing action of the coal may act on the combined copper. The slag from the operation containing an average of 0.9 Cu is run to waste. Every 24 hr. the copper is tapped from this furnace to the refining furnace, which is situated on a lower level, where it is refined by the usual methods described in §166 and cast into commercial shapes. Mass copper may also be added to the refining furnaces. In all modern furnaces, casting machines have replaced the former ladling operations. At the Michigan Smelter, 300,000 lb. of copper are refined at a charge.

During the refining process, samples for conductivity tests are taken to follow the course of the operations. These may be taken after the charge is melted and twice thereafter. Each charge is also usually analyzed for Cu and Ag to see if it conforms to standard specifications. About 15 per cent of the output of the Michigan district is refined electrolytically to recover precious metals. The remainder is used directly.

The usual sizes of the various products in the Lake district are ingots 20 lb., ingot bars 70 lb., wire bars 150 to 400 lb., round or square cakes 100 to 5,000 lb, anodes 500 lb.

The furnaces are fettled after each charge. The life of a furnace varies considerably, but it usually requires minor repairs every two or three months. The firebox may require rebuilding about every four months and the roof about every eight months.

A new process has been introduced at the Michigan Smelter for the removal of arsenic, which has in recent years greatly increased in the ores of this district. The removal is accomplished in the refining furnace, where a 300,000-lb. charge is treated by blowing soda ash below the surface of the molten metal, which should be hotter than in the usual refining operation. Using about 30 lb. of soda per ton of copper reduces the As from 0.3 to 0.01 per cent in 1 hr. The arsenical slags are crushed, leached with water, and the As precipitated as tricalcium arsenate, which is marketed as an insecticide.

A similar procedure is also carried out at the Calumet and Hecla smelter.

160. Blast Furnace.—As previously stated, the improvements in reverberatory practice make the blast furnace unnecessary for re-treating slags, and some plants have given up their use. Some data on present practice at the Calumet and Hecla plant and the former practice at the Michigan Smelter are given in Table LXX. The Michigan Smelter no longer uses blast furnaces.

TABLE LXX.—BLAST FURNACES FOR SMELTING NATIVE COPPER ORES AND BY-PRODUCTS

	Michigan Smelting Co.	Calumet & Hecla, Hubbell
Horizontal section at throat	4′ 9″ × 12′	
Area at throat, square feet	57	
Horizontal section at tuyères	3′ 4″ × 12′	3′ 6″ × 16′
Area at tuyères, square feet	39.9	56
Height, tuyères to throat	7′ 6″	7′ 3″
Height, tuyères to top of crucible	0′ 7″	0′ 7.5″
Water jackets, height	6′ 10½″	10′ 1½″
Bosh, height	6′ 10½″	
Bosh, amount inches in feet	9.5″ in 6′ 10.5″	
Crucible, depth	1′ 9½″	2′ 2″
Forehearth, fixed or movable	Fixed	Fixed
Forehearth, shell dimensions	4′ × 6′	Two 3 × 6′ and 3′ 6″ deep
Tuyères, number	18	32
Tuyères, diameter	4″	
Tuyère ratio	5.92 : 1	7.53 : 1
Charge (ore, + flux) weight, pounds	6,000	
Charge, tons in 24 hr	200	200
Charge, tons per square foot hearth area in 24 hr	5	
Cu, per cent of charge	20	
Coke, per cent of charge	6	
Coke, per cent ash	11	
Anthracite, per cent of charge	6½	
Anthracite, per cent ash	14	
Blast, cubic feet per min	6,000	
Blast, pressure ounces	4	
Cooling water for jackets, gallons per hr		
Granulating water, gallons per ton slag		
Men, number in 24 hr., a (regular crew) + b (accessory labor)	15	
Slag, SiO_2	40	33
Fe(Mn)O	17	33
Ca(Mg)O	20	20
Al_2O_3	15	12
Cu	0.9	0.8
Specific gravity	3.4	

The blast furnaces, formerly circular or elliptical in horizontal section, are all rectangular and have internal crucibles. The charge consists of reverberatory slag, briquettes, siliceous or ferruginous flux, limestone, and a mixture of anthracite and coke. The reverberatory slag from amygdaloid mineral is acid (SiO_2 40, FeO 20 per cent); that from conglomerate basic (SiO_2 25, FeO 45 per cent). If the slag belongs to different mining companies, it has to be smelted separately, as the irregularity of the copper content makes sampling impracticable. The normal blast pressure of about 16 oz. has been reduced in some instances to 4 oz. to insure a better reduction through slower smelting, 240 tons of charge *vs.* 70 tons. The black copper, with 95 + per cent Cu and some S from the fuel, is tapped at fixed intervals; the slag overflows continuously

through a trapped spout either into a single large brick forehearth, or into two smaller ones placed in series, from which settled copper is tapped at long intervals. The waste slag with 0.75 per cent Cu is collected in pots or granulated.

The cost of smelting in 1906 at the works of the Lake Superior Mining Co., treating 41,176 tons of mineral, was $7.293 per ton of ore.[1]

D. FIRE REFINING OF IMPURE COPPER[2]

161. Introductory.—In smelting copper ore in the blast or reverberatory furnace, and copper matte in the converter, black copper, blister copper, and coarse or converter copper are obtained, all of which contain impurities which make the metal unfit for industrial use. These impurities may be Fe, Pb, Zn, Sn, Co, Ni, As, Sb, Bi, S, Se, and Te; further Ag, Au, Cu_2O, and gases. The aim of refining is to remove the impurities as much as possible, and to produce a copper of a required purity having the necessary mechanical properties and electric conductivity. The process of fire refining consists in an oxidizing fusion in order to volatilize some metals and to oxidize and scorify others which have a greater affinity for O than has Cu, followed by a reducing fusion in which most of the Cu_2O formed and held in solution by the copper is reduced to Cu. A small amount of Cu_2O (0.5 $\pm$ per cent) is always left in the Cu in order to insure the presence of any remaining impurity in the state of oxide, in which it is less harmful than if in that of metal, when it is likely to form a solid solution.

162. Furnace.—Formerly the process was carried out in hearth furnaces,[3] from which the copper was obtained in the form of round discs as so-called "rosette copper." In recent years the electric furnace has been suggested[4] for refining, but it has not yet come into practical use. The only furnace which need be considered is the reverberatory furnace. The general statements regarding this furnace for the smelting of native copper ore (§158) hold good for the refining of copper. The main difference is that of size of furnace, which is caused by the form and character of the material to be treated, and with it that of the manner of charging and discharging. A refining furnace may have to work cakes of low-grade black copper and high-grade blister copper, sheets of pure cathode copper, or liquid converter copper. If the copper be low-grade and require a prolonged refining operation,[5] the furnace will have to be small, probably not exceeding 20 tons capacity; if the copper be nearly pure,

[1] AUSTIN, *Mining Sci. Press*, 1909, XCVIII, 592.

[2] STETEFELDT, *Berg. Hüttenm. Z.*, 1863, XXII, 185, 205, 219; HAMPE, *Z. Berg. Hütten. Sal. Wesen i. Pr.*, 1873, XXI, 218; 1874, XXII, 93; EGLESTON, *Trans. A. I. M. E.*, 1880–81, IX, 678; STAHL, "Dissertation," 1886; *Metallurgie*, 1907, IV, 761; KELLER, *Mining Ind.*, 1898, VII, 245; *Trans. A. I. M. E.*, 1898, XXVIII, 137; 1900, XXX, 310; GIBB, *op. cit.*, 1903, XXXIII, 661; HOFMAN, GREEN and YERXA, *op. cit.*, 1904, XXXIV, 671; HOFMAN, HAYDEN and HALLOWELL, *op. cit.*, 1907, XXXVIII, 171; WANJUKOW and SCHMIDT, *Metallurgie*, 1909, VI, 749; JOHNSON, *Met. Chem. Eng.*, 1911, IX, 396; EMRICH, *Trans. A. I. M. E.*, 1912, XLIII, 446; PETERS, E. D., "Practice of Copper Smelting," McGraw-Hill Book Co., Inc., New York, 1911, pp. 531–547.

[3] PERCY, J., "Metallurgy," Murray, London, 1861, pp. 399, 406; SCHNABEL, C.-LOUIS, H., "Handbook of Metallurgy," The Macmillan Co., New York, 1905, I, 248.

[4] RAUSCHENPLATT, *Metallurgie*, 1910, VII, 151, 435 (BORCHERS).

[5] PLATTEN, *J. Soc. Chem. Ind.*, 1906, XXV, 449.

which is the usual condition in this country, the capacity may be very much increased, reaching 100, 150, and even 250 tons.[1] The reduction in fuel consumption by this increase in capacity is shown by the curves of Keller[2] and Peters[3] given in Fig. 193. The curve of Peters shows that the saving in fuel is small when the charge is greater than 50 tons.

The bottom of the furnace and the manner of its support, as well as the construction of the sides of the furnace, have received much consideration with the increase of the weight of the charges. The bottom used to be built up exclusively of sand burned in, as is still the common practice with matting furnaces (§113). In a few instances silica brick have replaced the sand bottom, as has been done with some matting furnaces. With some furnaces the cooling vault, given up in matting furnaces, has been retained; with others the hearth has been built on cast-iron plates supported by brick pillars. The reason for air-cooling the bottom[4] is that in melting large charges of metallic copper there is danger of the hearth becoming too hot and breaking out; hence the additional cooling

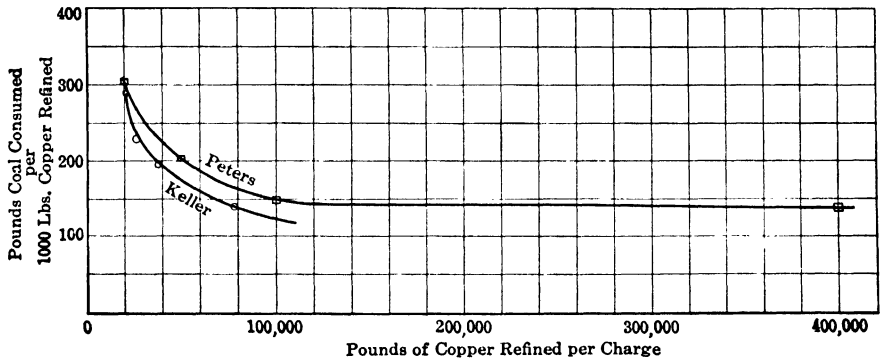

FIG. 193.—Relation between coal consumption and size of refining charge.

with increase of weight of charge. With furnaces holding 200 and 250 tons metal,[5] there has arisen the difficulty of making the bottom sufficiently strong so that it will not come up. This has been overcome by a forced circulation of air through a series of 2½- or 3-in. pipes, running crosswise underneath the brickwork carrying the sand bottom, and joined at the ends to two longitudinal pipes, one of which is connected with a fan, while the other is extended into the ash pit of the fireplace. With a 225-ton furnace, 100 pipes receive 5,000 cu. ft. air per minute. This forced ventilation with a foundation built up solid is believed by some to be preferable to natural ventilation with a hearth resting upon cast-iron plates supported by brick pillars, which is the more usual practice.

[1] ADDICKS, *Eng. Mining J.*, 1907, LXXXIII, 1002; PROSSER, *op. cit.*, 1907, LXXXIV, 171; WALKER, *Mineral Ind.*, 1910, XIX, 221.

[2] *Mineral Ind.*, 1898, VII, 250.

[3] "Practice of Copper Smelting," 1911, p. 567.

[4] *Eng. Mining J.*, 1913, XCV, 576 (HERRESHOFF), 816 (CLOUD), 864 (NASON).

[5] WALKER, *Mineral Ind.*, 1910, XIX, 221.

The inner sides of a furnace have been recently constructed in part of magnesite brick instead of silica brick throughout as before, as they appear to

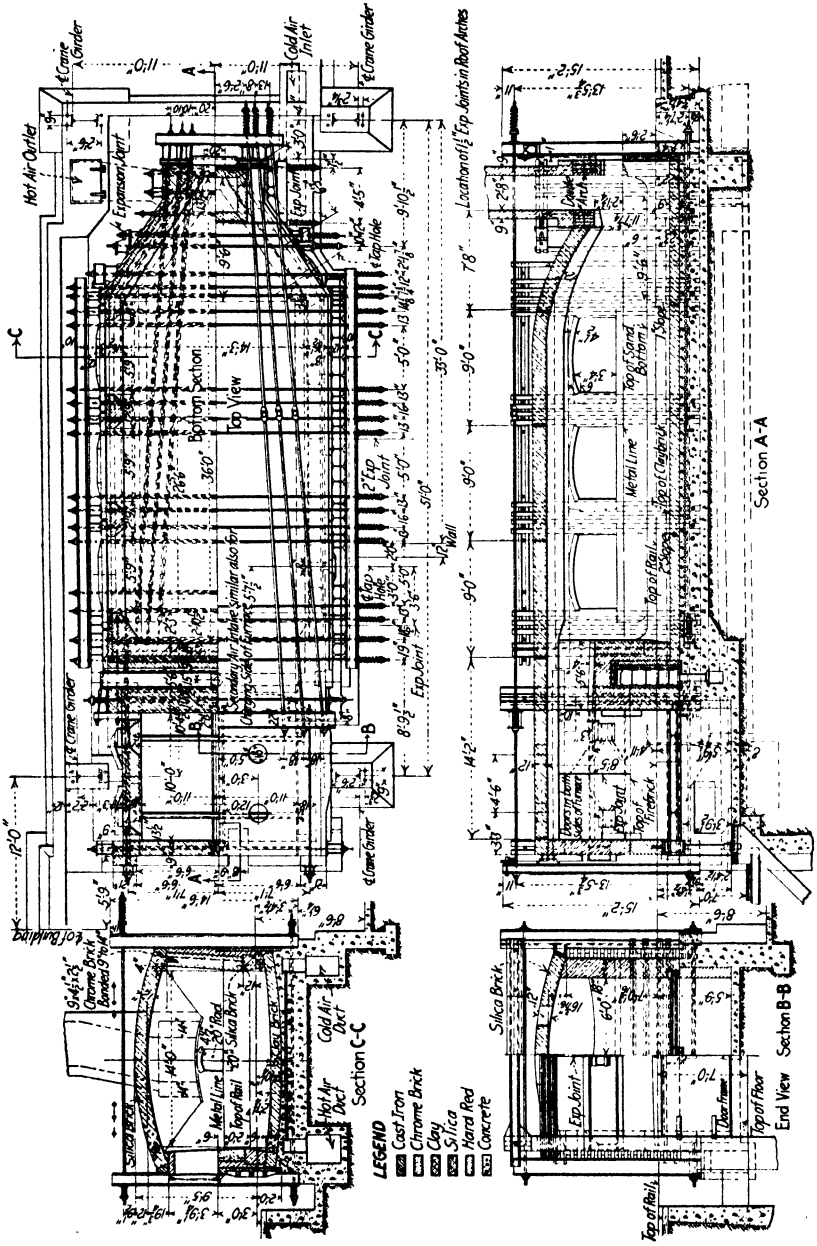

FIGS. 194-197.—Great Falls refining furnace.

stand better the corrosive effect of the charge. The magnesite brick reach from below the silica bottom to a short distance above the highest level of the metal bath.

The roof is always made of silica brick. The contact planes between magnesite and silica brick are formed by a course or two of neutral chrome brick. Addicks and Brower[1] had in operation at Chrome, N. J., a refining furnace with bottom of magnesite brick, and sides and roof of chrome brick.

The hearth of a refining furnace has to be seasoned with copper, as has that of a matting furnace with matte. The bottom is covered with a few inches of copper; this is melted slowly and gradually absorbed. The temperature is

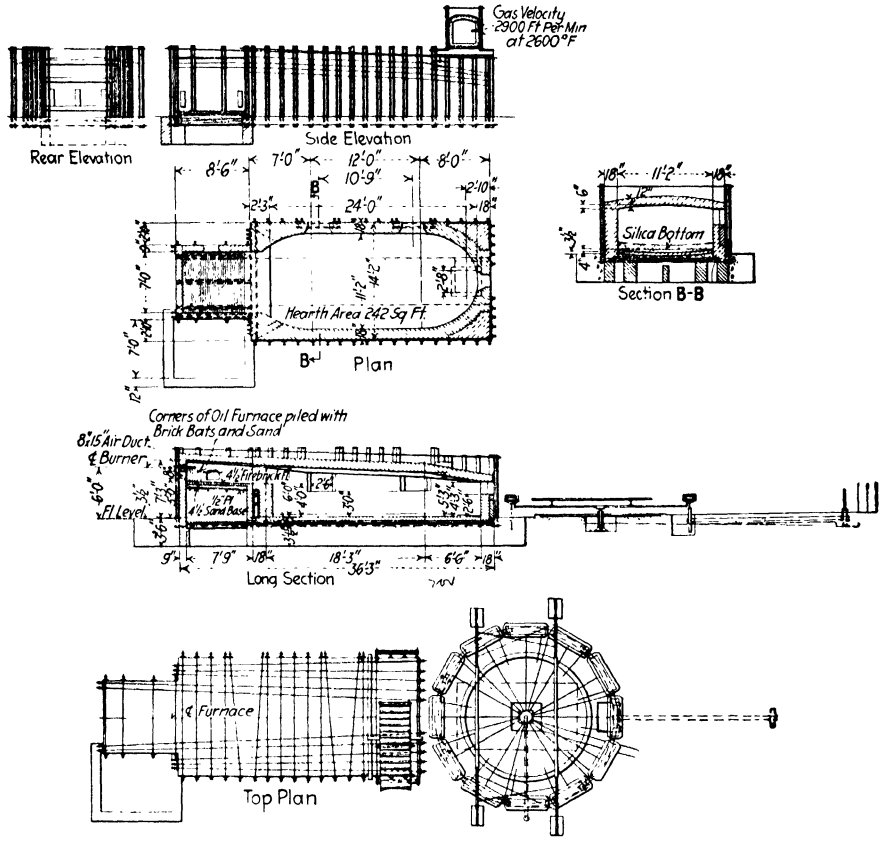

FIGS. 198–203.—Refining furnace at the Nichols Copper Co.

slightly lowered, and a second portion of metal charged, melted, and absorbed. The operations are repeated until all the copper that will be absorbed has been taken up. Some of the Cu will be oxidized to Cu_2O and slagged by the SiO_2; the slag formed, acting as a cementing material, strengthens the bottom. A sand bottom absorbs more copper than does one built of silica brick; a furnace resting upon plates locks up less copper than one supported by a solid or even a vaulted bottom. It is essential that the copper used for seasoning be of a high grade

[1] *Eng. Mining J.*, 1914, XCVII, 421.

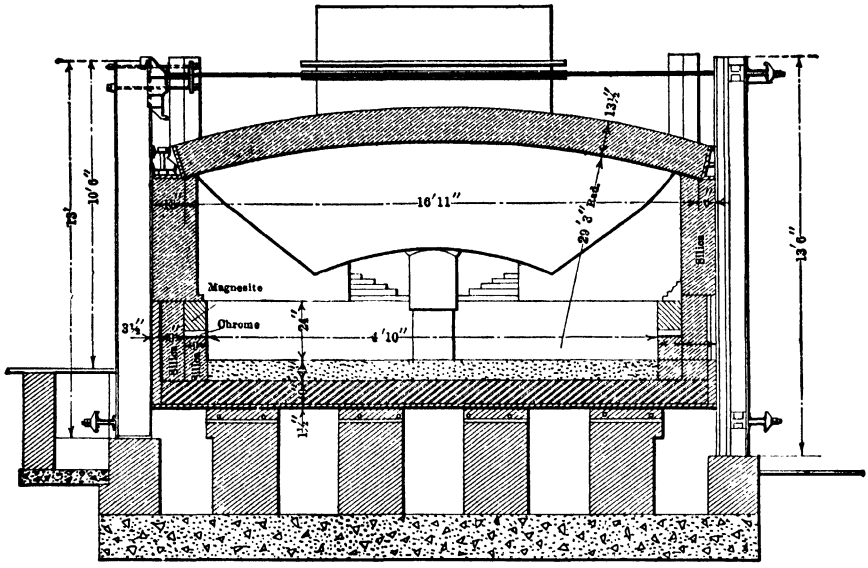

Section *C-D*

FIG. 204.—Copper refining furnace, United States Metals Refining Co., Carteret, N. J.

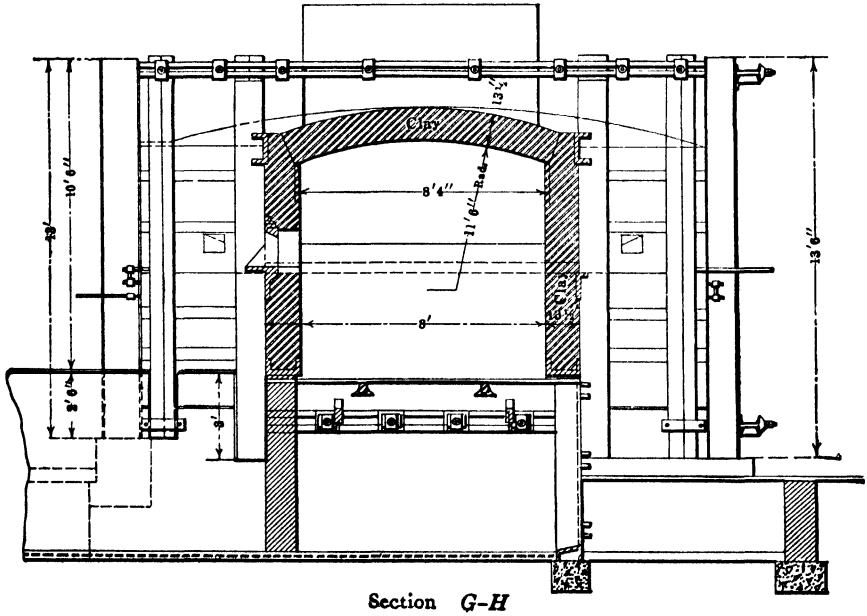

Section *G-H*

FIG. 205.—Copper refining furnace, United States Metals Refining Co., Carteret, N. J.

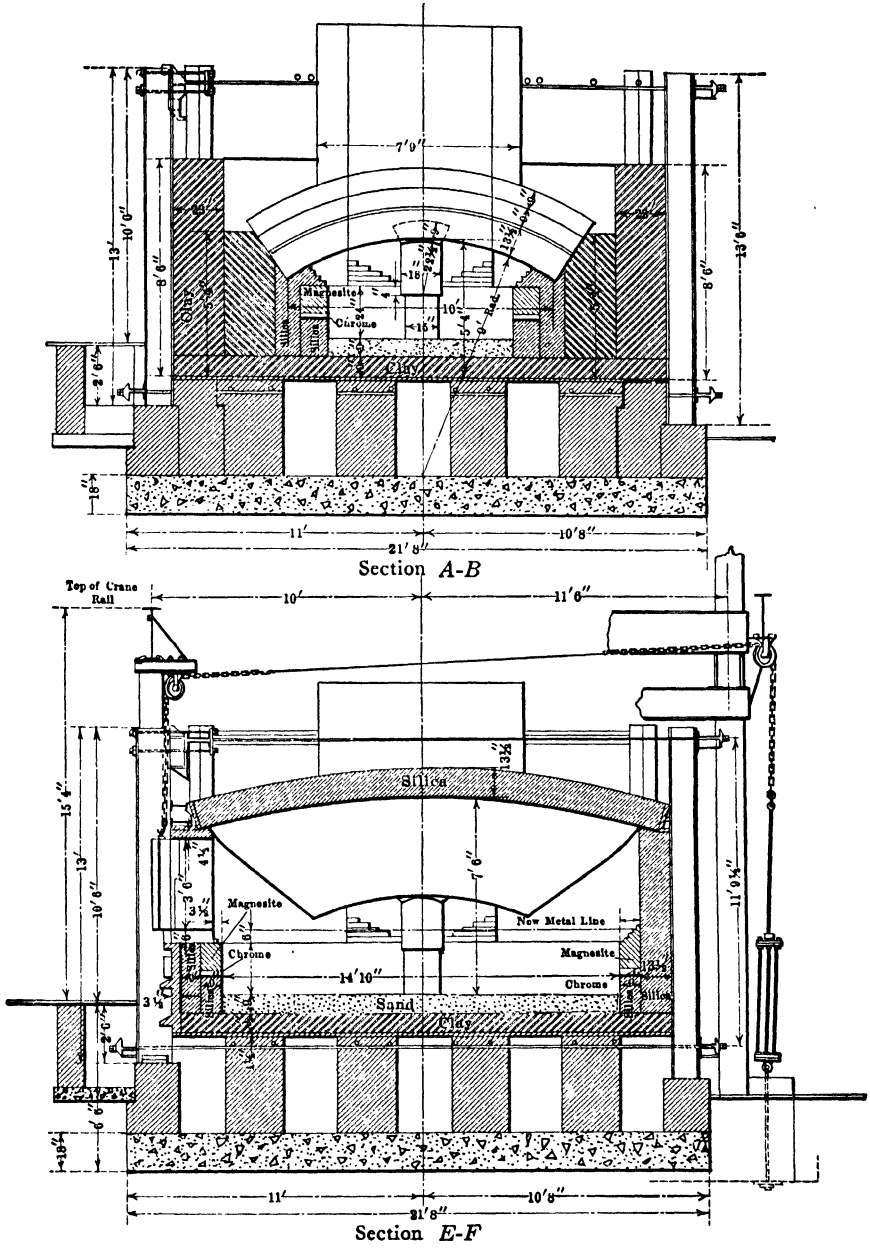

FIGS. 206–207.—Copper refining furnace, United States Metals Refining Co., Carteret, N. J.

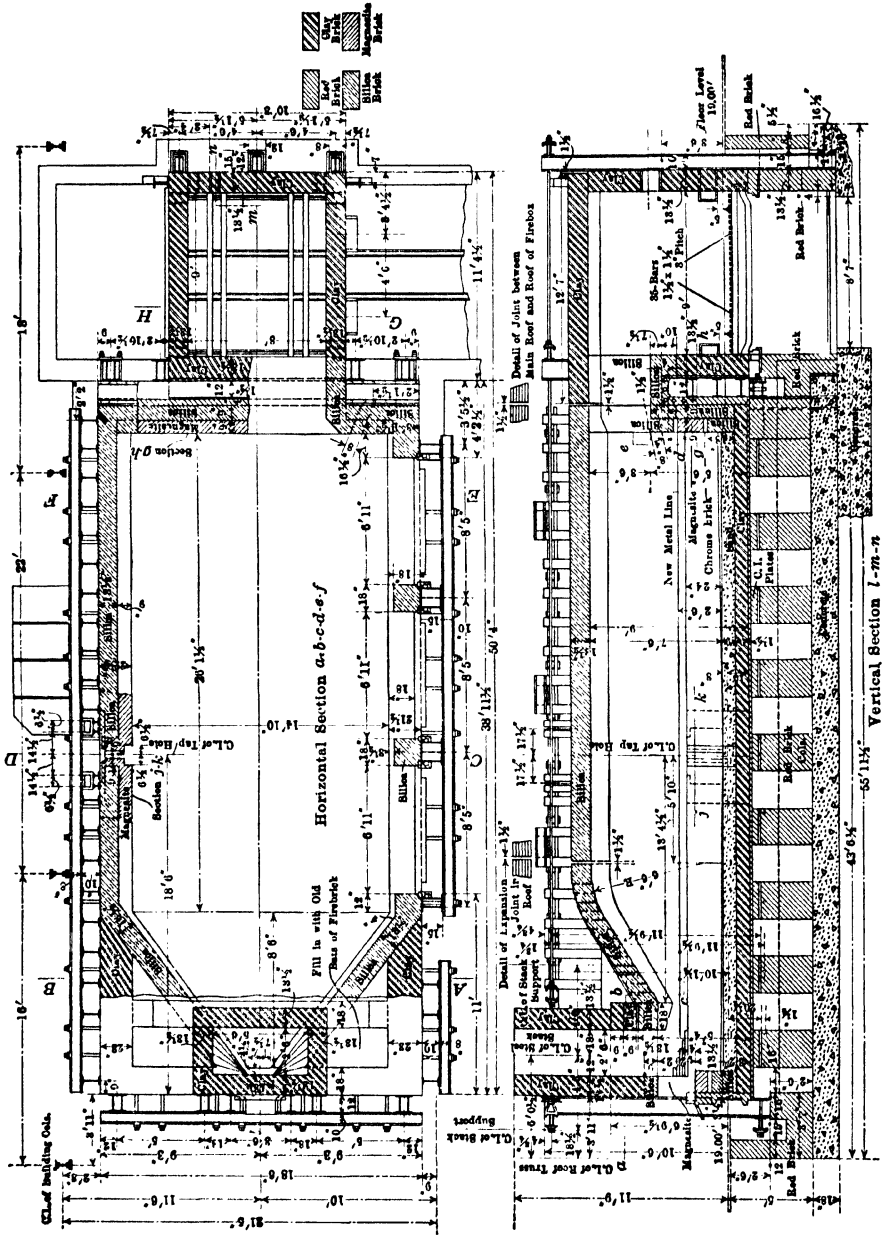

FIGS. 208–209.—Copper refining furnace, United States Metals Refining Co., Carteret, N. J.

so as not to "poison" the metal to be refined. An interesting case of such poisoning was that of Baltimore, where Te was the harmful metal.[1]

A small furnace will be charged by hand and the copper cast with hand ladles, a large furnace requires mechanical charging and molding by means of a casting machine.

The air necessary for fining may be admitted through ports in the fire bridge, or blown in through tuyère pipes placed on either side of the fire bridge.

The fuel may be bituminous coal, crude oil, or pulverized coal. The waste heat of the furnace may be recovered in part by recuperation or regeneration; in recent years the gases of most furnaces have been conducted through waste-heat boilers.

All operations are usually so conducted that it takes 24 hr. to work a charge.

The furnaces of the Anaconda Copper Mining Co. at Great Falls, Mont. (Figs. 194 to 197), the Nichols Copper Co., Laurel Hill, N. Y. (Figs. 198 to 203), and the United States Metals Refining Co. (Figs. 204 to 209), may serve as examples of modern refining furnaces. Their leading dimensions and their work as well as similar data of other furnaces are assembled in Table LXXIV.

Descriptions of some refining plants given in the technical literature are those of the First Raritan Works,[2] United States Metals Refining Co.,[3] Rio Tinto works,[4] and the Second Raritan Works.[5]

163. Mode of Operating in General.—The operations carried on in refining are charging, melting, fining (flapping), poling, and casting. These will be taken up in order, and followed by records of refining impure black copper and pure cathode copper.

164. Charging.—In charging solid copper, the cakes used to be placed by hand on a paddle, slid into the furnace, and deposited in such a manner as to allow the fire gases to come as much as possible into contact with the individual pieces. Thus, about 8 tons may be charged per hour through one door. With the increasing sizes of the furnaces the speed of charging had to be accelerated. By raising the material to be charged[6] with air lifts (pneumatic pistons, with tongs, running on a traveler) onto the paddles, the rate of charging has been increased to from 17 to 20 tons per hour per door, or a 35- to 40-ton furnace can be charged from the usual two doors in 1 hr. by a crew of 10 men. A crew of 12 men (two air lifts with 6 men, two paddles with 6 men) will charge 150 tons of blister copper through two doors in 3 hr. Charging a 200-ton furnace through three doors, unduly prolongs the operation; four or six charging doors, which would shorten the time, are inconvenient. Electrically driven mechanical

[1] EGLESTON, *Trans. A. I. M. E.*, 1882, X, 493.

[2] ADDICKS, *Mineral Ind.*, 1900, IX, 261.

[3] ADDICKS, *Mineral Ind.*, 1906, XV, 301; *Eng. Mining J.*, 1907, LXXXIII, 1001; VAIL, *Eng. Mining J.*, 1913, XCV, 1031.

[4] WALKER, *Eng. Mining J.*, 1907, LXXXIV, 111.

[5] EASTERBROOKS, *Electrochem. Met. Ind.*, 1908, VI, 245; *Eng. Mining J.*, 1917, CIV, 691.

[6] PROSSER, *Eng. Mining J.*, 1907, LXXXIV, 171.

chargers for cathodes have been constructed by Prosser and Ladd,[1] Addicks,[2] and Clark and Antisell,[3] by means of which 150 tons of cathodes are charged in less than 2 hr. by 2 men. Thus one of the difficulties which limited the size of a furnace has been overcome. With such bulky material as cathode copper it is difficult to introduce the whole charge at once; hence about three-fourths is sometimes charged at first, and, when melted down in part, followed by the remainder. Thus, with a 200-ton furnace, 150 tons will be charged in from 1½ to 1¾ hr., melted down in part in about 4 hr., and then 50 tons more added. In order to protect cathodes against the sulphurous gases of the coal formerly used at Great Falls, they were dipped into milk of lime[4] after they had been freed from adhering electrolyte by washing with water.

With liquid converter copper, the content of the converter is poured into a ladle and then through a movable brick-lined spout into the refining furnace. At Anaconda,[5] *e.g.*, 5-ton steel ladles, plastered with finely ground ore to a thickness of 4 in. and manipulated by an overhead electric traveling crane deliver the metal to two refining furnaces[6] of 100-tons capacity. The charge is made up of 90 to 95 tons of liquid converter copper and 6 to 7 tons of scrap (ladle sculls, defective anodes, etc.). It takes 1 to 2 hr. to charge scrap, 8 hr. to charge converter metal; fining by blowing in air under 15 lb. pressure begins when the furnace is two-thirds filled, and is finished when the furnace has received its entire charge. The copper is then poled for 2 hr. and cast into anodes at the rate of 25 tons per hour.

165. Melting.—When the furnace is charged, the side doors are closed, luted, the fire box is filled with coal, and the fire urged to cause the fusion of the copper. Impure black copper will be melted down slowly, and air admitted through the ports in order to assist the oxidation and elimination of foreign metals; toward the end of a melt, blast may be turned on. Pure blister or cathode copper is melted quickly and with closed air ports, as all oxidation necessary can be readily accomplished during the flapping period. In from 8 to 12 hr. after charging, the copper will be fused and covered with a layer of slag made up of slagable impurities, mainly Fe, perhaps some Sn, Zn, Co, Ni, Pb, then Cu_2O and SiO_2, some Al_2O_3, CaO, MgO, and of shots of Cu. The slag is skimmed. A sample of impure black copper will show a raised rough surface, and the section a dark-red color and blisters. The fracture of a high-grade blister copper sometimes has a radiated and columnar structure.

166. Fining (Flapping).—This is an oxidizing fusion which is to volatilize Zn,Pb, As(?),Sb(?),S, to scorify Mn, Fe, Pb, Zn, Ni, Co, Bi, and some Cu, and to saturate the Cu with Cu_2O. The slags are skimmed about as fast as they are formed. At first they are black and sticky. As the impurities begin to diminish

[1] *Eng. Mining J.*, 1908, LXXXVI, 867.
[2] *Mineral Ind.*, 1906, XV, 304.
[3] *Eng. Mining J.*, 1910, XC, 264.
[4] HOFMAN, *Trans. A. I. M. E.*, 1904, XXXIV, 313.
[5] AUSTIN, *Trans. A. I. M. E.*, 1906, XXXVII, 431.
[6] Drawing in PETERS, "Practice of Copper Smelting," 1911, p. 571.

and copper is being oxidized and scorified, the slag becomes brownish and reddish, and thinner. The copper bath at the same time takes up Cu_2O. The dissolved Cu_2O gives up O to the impurities which have a stronger tendency to become oxidized than has Cu; being insoluble in Cu, they rise to the surface as oxides and are taken up by the slag. Oxidation has to be stopped when slag formation ceases and the Cu is saturated with Cu_2O, as otherwise the Cu_2O will float on the surface as an oil-like substance. At this stage the copper holds about 6 per cent Cu_2O. During the first of the fining the temperature is kept high, as this is more favorable to the oxidation of impurities than to that of copper; during the second part the temperature is allowed to fall a little, in order to favor the formation and solution of Cu_2O.

The oxidation is hastened by "flapping," which in recent years has been replaced by the use of compressed air. Flapping consists in striking the surface of the metal from the skimming door with the edge of the head of a rabble in order to uncover the surface of the copper, and to cause waves to travel in the direction of the fire bridge. Forcing air under a pressure of 80 lb. through four to six iron pipes, ¾ to 1 in. in diameter, thrust into the copper through the side doors, not only hastens the operation, but improves the product. Thus Calumet and Hecla hand-rabbled copper contained Cu + Ag 99.87, Fe 0.08, S 0.09, As 0.025 per cent while with air rabbling the figures were Cu + Ag 99.92, Fe 0.03, S 0.04, As 0.025 per cent.[1] The pipes burn off, and the oxidized iron goes into the slag. A sample of copper taken toward the end of the fining period will rise in the center of the ladle while it is solidifying on account of the SO_2 set free by the reaction $Cu_2S + 2Cu_2O = 6Cu + SO_2$.[2] The gas will break through the chilled surface and throw up liquid copper from the center in the form of small craters, similar to the sprouting of silver. The sample is said to "spew" or "throw a worm." At the same time the red-hot surface will show black specks, said to be due to Cu_2S by some observers and to Fe by others.

As the fining progresses, at least with samples containing little S, the evolution of SO_2 will diminish and gradually cease. In the samples taken, the rising of the surface and the specks on the latter will diminish, the fracture and color will improve, small disseminated bubbles will be found only near the surface. Fining is continued until the stage of set copper has been reached, *i.e.*, copper holding about 6 per cent Cu_2O in solution, when a sample will show a smooth depressed surface without any visible specks while red-hot, and the fracture will reveal a single bubble beneath the apex of the depression; its structure will be coarse columnar to cubical; the color brick-red; there will be no luster.

The time required for fining varies from 2 to 6 hr. according to the character of the copper and the manner of assisting oxidation. As shown in Wanjukow's diagram (Fig. 210), the fining may have to be repeated with very base copper.

If the copper to be refined is rich in S, the reaction between Cu_2S and Cu_2O will be complete only if the temperature is considerably lowered. The reaction

[1] Private communication, J. B. Cooper.

[2] STETEFELDT, *Berg. Hüttenm. Z.*, 1863, XXII, 206; HEYN and BAUER, *Metallurgie*, 1906, III, 83; DOELTZ, *op. cit.*, 1907, IV, 421.

may become so violent as to project fine particles of metal from the surface in the form of a spray, or "copper rain"; it is sometimes sufficiently strong to cause the metal to boil and even to foam. A true set copper can be obtained only after the decomposition of all Cu_2S is complete.

There are several studies which deal with the elimination of impurities in fining. Thus Keller[1] found that the relative slagability in refining converter and cathode copper was Cu 1, Pb 52.1, Sb 5.90, As 5.09, Bi 1.07, Se Te 0.84; this means that for each percentage of Cu slagged there is scorfied a large amount of Pb, a smaller amount of Sb and As, and that Bi, Se, and Te are taken up by the slag in about the same proportion as in Cu. Gibb[2] found by comparison of analyses of blister copper, refined copper, and refinery slag that all elimination of Sb, As, and Bi was due to scorification, and none whatever to volatilization, as had been supposed.

TABLE LXXI.—ANALYSES OF COPPER-REFINERY SLAGS

	SiO_2 per cent	FeO	Cu_2O	NiO	CoO	SnO	Al_2O_3	CaO	MgO	PbO	Bi_2O_3	Sb_2O_5	As_2O_5	$SeTe$	S	Ag ounces per ton	Cu
Wales[a]	47.4	3.1	36.2	0.4	..	0.2	2.0	1.0	0.2	...	....	.	.....	.. .	..	.....	9
Kaafjord[b]	40.5	3.5	46.4	1.8	0.3	...	2.7	3 0	0.7								
Baltimore[c]	39.02	10.54	40.15	...	...	...	4.19	5.04	...	0.70	0 0020	0.2894	0.0751	0.0018	0.61	0.05	10
Great Falls[d]	19.1	2.0	....	...	...	...	1.8	7.2	1.4	.. .	.. . ..	0.005	0.03	. .	0.17	0.35	62.89

[a] LE PLAY, *Ann. mines*, 1848, XIII, 503.
[b] STOMEYER, *Berg. Hüttenm. Z.*, 1854, XIII, 10.
[c] KELLER, *Mineral Ind.*, 1898, VII, 247.
[d] BURNS, *Trans. A. I. M. E.*, XLVI.

It has always been supposed that refinery slags were mixtures of various silicates. Some investigations[3] seem to show that, with slags running low in SiO_2, one may have to deal with ferrites,[4] $MO \cdot Fe_2O_3$, in which MO = FeO and CuO. Laboratory experiments show that these have a strong oxidizing effect. It is even suggested that roasted copper matte, CuO and Fe_2O_3, be added to a refining charge in order to hasten the removal of impurities, such as S, Pb, As, Fe, and at the same time to increase the yield in copper; nobody will again introduce Fe into a bath of Cu when he has worked hard to get rid of it.

167. Poling.—Poling consists in thrusting through the skimming door of the furnace into the copper the butt end of a green pole and causing the metal to boil by means of the volatile matter set free by the heat.

If black copper is being refined it is necessary to remove it to a separate furnace for the poling operation because of impurities adhering to the hearth which would be reduced back into the copper.

If liquid converter copper is being refined the gases may be partly expelled by lowering the temperature nearly to solidification.

[1] *Mineral Ind.*, 1898, VII, 246; *Trans. A. I. M. E.*, 1898, XXVIII, 137, 1900, XXX, 310.
[2] *Trans. A. I. M. E.*, 1903, XXXIII, 653.
[3] RAUSCHENPLAT, *Metallurgie*, 1910, VII, 151; KOHLMEYER, *ibid.*, 289; BORCHERS, *ibid.*, 435.
[4] HOFMAN, "General Metallurgy," 1913, p. 466.

Most of the refining plants in the United States treat only high-grade (converter) copper, which contains hardly any SO_2; further, most of the copper is charged in the solid state, and SO_2 is insoluble in copper.

The practice of fining and poling simultaneously[1] may hasten matters, but cannot well furnish as good a product as when the two processes are kept separate.

The object of poling is to reduce the Cu_2O of the brittle set copper and make the copper mechanically strong, or bring it to a "tough pitch."

The metal bath is skimmed clean, the side doors are closed and luted, and poles of wood (birch, spruce, usually two), 6 to 10 in. in diameter at the butt and 15 to 25 ft. long, thrust through the skimming door with their butt ends in the copper, and held in an inclined position by forcing a notched plank (horse) under the protruding ends or by chaining them. The poles are pushed in as fast as they burn away. The heat of the metal chars the wood, water vapor is set free, which stirs the copper, and CO, H, and C_xH_y, which become more or less disseminated through it; CO and H reduce Cu_2O and are oxidized to CO_2 and H_2O, both insoluble in copper; the C_xH_y are decomposed, when the H is oxidized before the CO; the charcoal formed has its reducing effect. As the percentage of Cu_2O decreases, the oxidation of the gases diminishes, and the absorbing power of the Cu for H and CO increases; finely divided C from the dissociated C_xH_y rises unoxidized to the surface.[2] At some works the metal is covered with charcoal or clean egg coke or both before the pole is thrust into it; at others the C is introduced only when the poling is partly finished; frequently refiners add C only toward the end of the poling in order to hold the copper at the tough-pitch stage. In all cases the charcoal or coke exerts its reducing effect upon the metal.

The progress of the reduction is followed by observing the changes in fracture[3] of small ladle samples, 2 in. in diameter and ¾ in. thick, taken at first every 10 or 15 min. and more frequently later on. A sample, chilled in water, is notched on the convex surface with a chisel, placed in a vise, and given a shearing blow with a hammer. If a small ingot, 12 by 2 by 2 in., is cast as test piece, this is nicked to a depth of ⅛ in., supported at the ends, and then broken by the pressure of a screw or the piston rod of a steam cylinder.[4] The structure of the fracture is at first columnar and coarse; it may pass through cubical and coarse, radiated and coarse, finely radiated, somewhat granular, granular, and finely radiated, to reach finely granular and finely radiated (fibrous). The color at first a dark brick-red, becomes a lighter brick-red, shades off into rose-color, and finally becomes a true rose-color. The luster, at first absent, appears in the form of specks of silkiness, which increase in size, until the entire surface has a silky appearance.

[1] *Eng. Mining J.*, 1909, LXXXVIII, 735 (PETERS), 988 (LAIST).

[2] Poling with oil has been tried, but has proved successful only in part, as the operation had to be finished with poles; poling with water gas is being considered.

[3] HOFMAN, GREEN and YERXA, *Trans. A. I. M. E.*, 1904, XXXIV, 694.

[4] HEATH, *Proc. Lake Superior Mining Inst.*, 1901, VII, 73.

Additional tests[1] are those for malleability, electric conductivity, torsion, microstructure, and for brass making.

Malleability.—1. A hemispherical sample is placed in a vise with plane surface uppermost and bent.

2. A small ingot is forged or drawn into a rectangular bar, and then twisted into the form of spiral.

3. A button, 2 in. in diameter and 2 in. thick, with handle, is cast and the button hammered to a thin disc.

4. A flat sample ingot is hammered out and bent to and fro.

5. Another ingot, just after it has solidified but is still red-hot, is bent upon itself.

In none of these tests may there appear any cracks.

Electric Conductivity.[2]—A test bar 1 in. square and 8 in. long is heated and rolled into a ¼-in. rod, annealed, drawn cold through Nos. 2, 4, 6, 8, 10 to a No. 12 wire B. & S. gage, finished through a diamond die to 0.0808 in. diameter, and tested in a Willyoung or a Hoopes conductivity bridge.

Torsion.—Tests are made with the same wire: two clamps set 6 in. apart hold the wire, one of them is rotated until the wire breaks; 40 twists with 1 per cent elongation is a required figure for wire bars.

Microstructure.—The microscopical examination of the polished surface of a sample furnishes a rapid method for determining the amount of Cu_2O present (page 17).

The Brass Test.—This test formerly very common has fallen into disuse: 60 parts of copper are melted in a crucible under a charcoal cover, 40 parts of zinc are stirred in with an iron rod; the brass formed is cast into a small ingot, 1¼ in. square and 4 in. long, and allowed to cool slowly. With impure copper, the fracture is columnar to coarsely fibrous, two diagonal lines are clearly visible, the color is dark yellow, and there is no luster; with pure copper, the fracture is finely granular, there are no diagonal lines, the color is light yellow, and the luster silky. Chemical analysis[3] shows what impurities are present.

Tough-pitch copper is always allowed to retain some Cu_2O, as it insures the presence of all impurities as oxides as long as these have a greater affinity for O than has Cu, and as it is a controlling factor of the amount of gas held in solid solution by the copper, which in its turn governs the greater or smaller crowning of the surface of an ingot, bar, or cake. An average figure is perhaps 0.7 per cent Cu_2O; with a heavy cake it will be higher, as this holds more gas than a wire bar, for which the CU_2O will be kept lower. The rôle that a small admixture of Fe or S may play is not definitely settled.

Overpoling.—If the reduction in poling is carried too far, the copper gives off gas (spews, throws a worm), becomes porous and brittle, yellowish, and assumes a brilliant luster. If it has been overpoled,[4] too much Cu_2O has been reduced to Cu, and foreign substances have been changed from the oxide to the

[1] HEATH, *op. cit.*, 1901, VII, 68.

[2] BURNS, *Trans. A. I. M. E.*, 1913, XLVI, 739.

[3] HEATH, *J. Am. Chem. Soc.*, 1905, XXVII, 308, 1907, XXIX, 607.

[4] HOFMAN, HAYDEN and HALLOWELL, *Trans. A. I. M. E.*, 1907, XXXVIII, 171.

metallic state. If the copper has been only slightly overpoled, *i.e.*, when the casting begins to show excessive crowning, flapping the copper, to cause some Cu_2O to form, will correct the evil. If the overpoling is decided, the charge has to be worked over, *i.e.*, the charcoal removed, the copper reoxidized to set copper, and poled again. Correcting the great lack of Cu_2O by flapping alone does not mend matters satisfactorily, as it becomes next to impossible to hold the copper at the proper pitch while casting. An explanation of this fact is still lacking.

Certain metals and alloys have been used for the toughening of copper. Thus, Pb[1] is to assist in expelling gas, in scorifying Cu_2O or reducing it, and thus make the copper more malleable; Cu_xP,[2] Cu_yMn,[3] Si,[4] Mn_2Si,[5] Fe_xSi for arsenical copper,[6] Mg or Cu_vMg,[7] BO[8] have been and in some cases are used for the reduction of Cu_2O and for preventing the oxidation of copper while casting.

168. Examples of Refining.—Three graphic representations of the changes taking place in refining will furnish details of the chemical and physical changes outlined in the preceding discussion.

Wanjukow[9] studied by means of chemical analyses the changes that took place in refining a charge of 4,450 lb. of impure black copper Cu 94.55, Ag 0.0021, Pb 0.0123, Fe 3.0373, Co 0.8944, Ni 0.4080, P 0.0105, As 0.1257, Sb 0.0020, O 0.0953, S 0.8678, SO_2 0.0006, Insol. 0.0004; total 100.0064 per cent in a reverberatory furnace provided with two tuyères and heated with producer gas generated from twigs, brush wood and pine needles. The copper was brought to tough pitch by two consecutive refinings. The results are drawn in Fig. 210. The abscissa gives the time and the different stages of the process. Thus, gas and air are turned on at 2:22 o'clock, charging is begun at 2:23 and finished at 3:30. At 4:30 the charge is melted; at 4:40 the blast is turned on; boiling begins at 5:50 and reaches its maximum at 6:25 to 6:30. At 7:00 boiling ceases and poling is begun, which is a dense poling. At 7:38, the blast and other access of air are shut off, whereby dense poling changes into tough poling. At 8:15 the copper is at tough pitch. The second oxidation is started by turning on the blast; at 8:30 the second dense poling begins,

[1] EGLESTON, *Trans. A. I. M. E.*, 1881, IX, 705; STAHL, *Berg. Hüttenm. Z.*, 1890, XLIX, 127; KELLER, *Mineral Ind.*, 1898, VII, 233; JOLIBOIS and THOMAS, *Rev. metal*, 1913, X, 1264.

[2] HAMPE, *Z. Berg. Hütten. Sal. Wesen i. Pr.*, 1876, XXIV, 8, *Berg. Hüttenm. Z.*, 1876, LV, 158; RÖSSLER, *op. cit.*, 1878, XXXVII, 370; 1879, XXXVIII, 139; *Z, Berg. Hütten. Sal. Wesen i. Pr.*, 1879, XXVII, 14.

[3] PARSONS, *Eng. Mining J.*, 1876, XXXI, 366; RÖSSLER, *Berg. Hüttenm. Z.*, 1878, XXXVII, 370.

[4] *Brass World*, 1905, I, 199.

[5] GLOGER, *Metallurgie*, 1906, III, 253.

[6] JOHNSON, *J. Inst. Metals*, 1913, X, 275; *Eng. Mining J.*, 1913, XCVI, 648, 833.

[7] *Oesterr. Z. Berg. Hüttenm.*, 1901, XLIX, 546; *Eng. Mining, J.*, 1902, LXXIV, 372; SPERRY, *Brass World*, 1905, I, 43; HUSEN, *Metall u. Erz*, 1912, X, 480, 490; 1913, XI, 518; JOLIBOIS and THOMAS, *Rev. métal.* 1913, X, 1264.

[8] WEINTRAUB, *Trans. Am. Electrochem. Soc.*, 1910, XVIII, 207; *Met. Chem. Eng.*, 1910, VIII, 629; 1912, X, 433, 536; *Brass World*, 1912, VIII, 355; *Metal Ind.*, 1912, X, 462; *Trans. Am. Inst. Metals*, 1912, VI, 138; THOMSON, *Metal Ind.*, 1913, XI, 8; *Trans. Am.Inst. Metals*, 1913, V, 101.

[9] *Metallurgie*, 1909, VI, 749, 792.

lasts until 8:50, when the blast is shut off and thereby again dense poling is changed into tough poling. This continues until 9:30, when P is added. At 9:40 ladling the refined copper is started.

The ordinate represents percentages on the basis of 100 parts of Cu (which changes the analysis above to Cu 100, Ag 0.0022, Pb 0.0130, Fe 3.2124, Co 0.9455, Ni 0.4312, P 0.0111, As 0.1328, Sb 0.0215, O 0.1009, S 0.9173) and

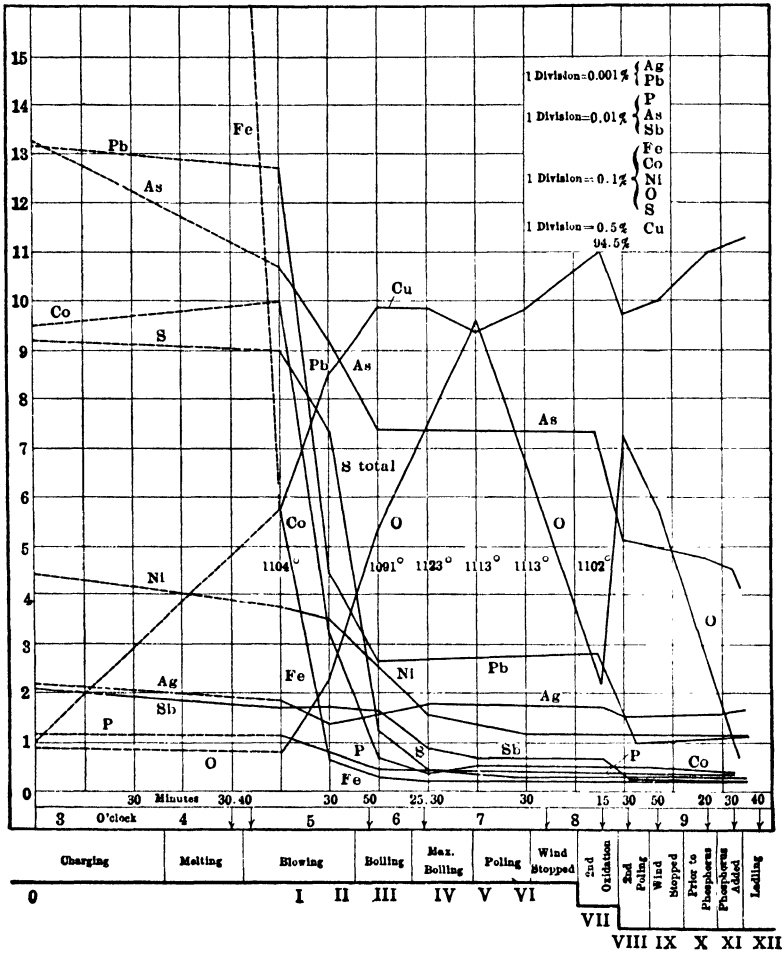

FIG. 210.—Elimination of impurities in refining black copper (Wanjukow).

gives the relative eliminations of impurities. A different scale is employed for certain impurities, as explained in the legend in Fig. 210. The lines covering the period of charging to complete fusion, 2:23 to 5:00 o'clock, are dotted, as their positions have not been determined; they indicate the probable rates of oxidation.

The refined copper gave upon analysis the figures shown in Table LXXII.

TABLE LXXII.—ANALYSIS OF REFINED COPPER

Cu	Ag	Pb	Fe	Co	Ni	P	As	Sb	O	SSO_2	S total	Total
99.66	0.0016	0.0010	0.0080	0.0243	0.1091	0.0012	0.0402	0.0017	0.00486	tr.	0.1093	99.9051
100.00	0.0016	0.0010	0.0080	0.0244	0.1095	0.0012	0.0403	0.0017	0.00487	..	0.1093	

The curves show the following:

Fe is oxidized during the melting period and quickly scorified as soon as the copper has become liquefied, falling to 0.0080 per 100 parts Cu at the beginning of the boiling period; from then on the elimination progresses more slowly.

Co.—The rise in the Co curve during the melting period would indicate that Co was not oxidized; the contrary is true, but CoO is unstable at a red heat. The rapid drop of the curve after fusion shows that Co is scorified nearly as fast as is Fe; at the beginning of the boiling, the elimination is weaker; at the strongest boiling, it reaches 0.024 per 100 Cu and then practically ceases.

Ni.—This metal is difficult to slag; the refined metal retains as much as 0.11 per 100 Cu. At first, oxidation and scorification progress very slowly; after most of the Fe and Co have been slagged (before the boiling stage), the elimination progresses more rapidly, then slows up when boiling is in full progress, and finally ceases. The first refining operation has taken out all the Ni that can be removed, so repeating the process does little good.

S.—Some S is oxidized in melting the charge; the elimination then proceeds more quickly but still very slowly until most of the Fe has been scorified, when, with the lowering of the temperature from 1,109 to 1,091° C., the boiling period sets in, and SO_2 is set free rapidly, bubbling up through the copper (copper rain), and the S content drops from 0.7189 to 0.0911 per 100 Cu; from now on the evolution of gas goes on more slowly, reaching 0.0379 in stage IV, 0.0256 in stage V, and 0.0097 in stage VI, when the S content changes little.

O.—The metal takes up O during the melting; the O content rises quickly during the fining period, and especially so after the Fe and part of the Co and Ni have been scorified; boiling assists the formation of Cu_2O. With the beginning of the poling, the percentage of O falls quickly and regularly; it increases with the second oxidation and decreases again with the second poling.

Pb.—This metal is scorified during both oxidizing periods, more quickly in the first, when there is more Pb present, than in the second; little Pb is driven off after this.

Ag.—A small amount of Ag enters the slag with the Pb.

Sb.—This metal, difficult to eliminate, appears to be slagged to a greater extent during the melting than the fining period; the boiling of the copper is favorable to oxidation.

As.—The behavior of As is similar to that of Sb; a large part is oxidized in melting, fining favors elimination, poling has no effect.

The second refining stage appears favorable to the scorification of both Sb and As.

The second example of refining impure copper is that of Stahl,[1] who treated at Mansfeld, Germany, in the usual course of work, two 10-ton charges of blister

[1] *Metallurgie*, 1912, IX, 362, 377.

copper in about 21 hr. at temperatures ranging from 1,200 to 1,450° C., and took samples for chemical analysis at the end of each stage of the process. The results of one of his tests are given in Table LXXIII and plotted in Fig. 211.

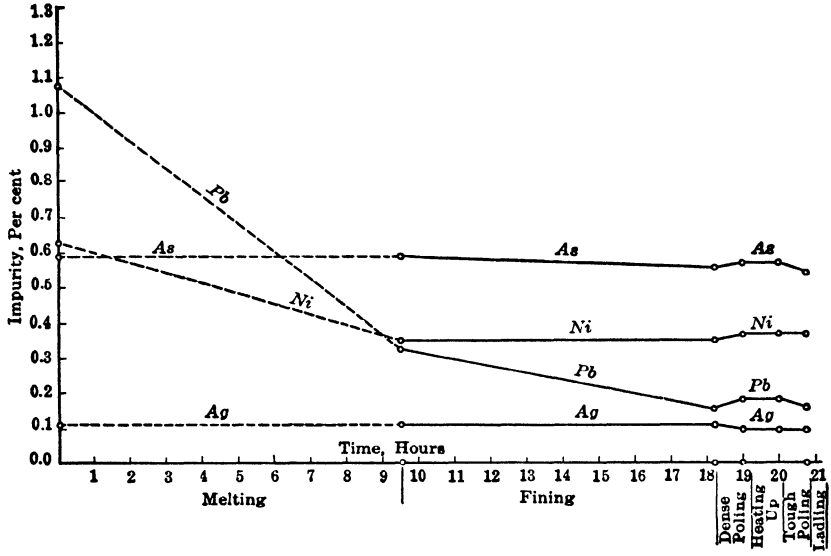

FIG. 211.—Elimination of impurities from blister copper (Stahl).

In refining impure Cu the elimination of impurities does not proceed in a fixed order or at a given rate, but is governed rather by the amount of impurity and the form in which it is present, by the lining of the reverberatory furnace (acid or basic), the size of the charge, the admission of air, the temperature, and

TABLE LXXIII.—STAHL, ELIMINATION OF IMPURITIES IN REFINING BLISTER COPPER

	Blister copper		After melting		After fining		After dense poling		After tough poling	
	Per cent	Per 100 Cu	Per cent	Per 100 Cu	Per cent	Per 100 Cu	Per cent	Per 100 Cu	Per cent	Per 100 Cu
Cu.....	98.140	100.000	98.950	100.000	98.550	100.000	99.060	100.000	99.300	100.000
Ag.....	0.011	0.011	0.010	0.010	0.010	0.010	0.009	0.009	0.009	0.009
Pb....	1.060	1.080	0.330	0.330	0.160	0.160	0.190	0.190	0.170	0.017
Ni.....	0.610	0.620	0.350	0.350	0.350	0.350	0.360	0.360	0.360	0.360
As.....	0.058	0.059	0.058	0.059	0.055	0.056	0.057	0.057	0.054	0.054
O.....	0.121	0.123	0.302	0.306	0.875	0.888	0.324	0.329	0.107	0.108
Total	100.000	.....	100.000	.....	100.000	.....	100.000	.....	100.000	

other details of the mode of operating. The work of Wanjukow and Stahl shows, whatever may be the variations as to detail, in general: (1) that Zn, Fe, Co, Sn are removed completely at the beginning of the fining period, and S at end of dense poling; (2) that the elimination of Ni, Pb, As, and Sb continues through the entire process and is imperfect; and (3) that Ag and Bi are

removed only to a very small extent, the former mainly by volatilization, the latter by scorification.

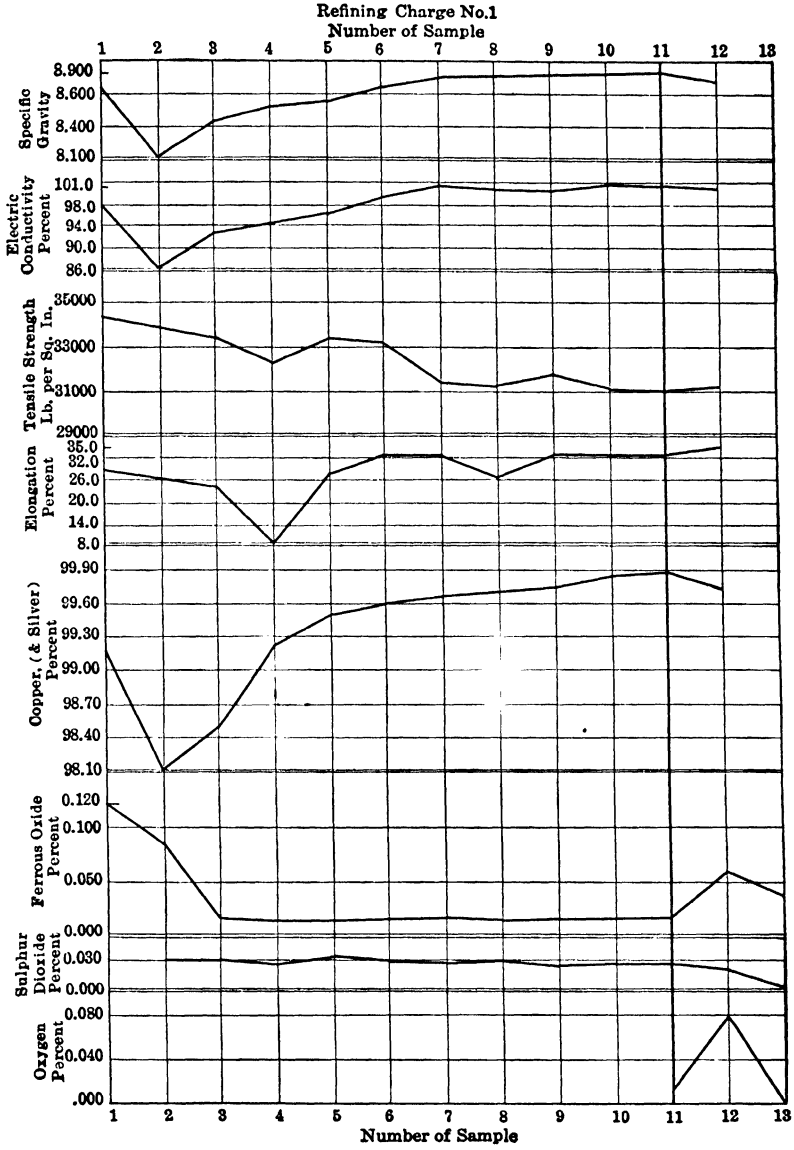

FIG. 212.—Changes in refining cathode copper.

Hofman, Hayden and Hallowell[1] followed the chemical and physical changes which took place in cathode copper as it passed through a 100-ton refining furnace to be cast into wire bar. The results are given in Fig. 212.

Sample No. 1 was taken after melting and skimming, No. 2 after fining for 6 hr. with compressed air, when the stage of set copper was reached; samples

[1] *Trans. A. I. M. E.*, 1907, XXXVIII, 171.

Nos. 3 to 11 at 15-min. intervals during tough poling; No 11 represents tough-pitch copper; Nos. 12 and 13 overpoled copper.

On the whole, the chemical changes up to the tough-pitch stage are what would be expected; the physical properties are in harmony with the rise and fall of the Cu content. The percentage of FeO, usually lower than that of S, is higher; it was reduced to 0.086 per cent by 6 hr. fining and reached the minimum of 0.022 per cent only after poling for 15 min., the probable reason being that some Fe was taken up from the iron pipe conveying compressed air into the

FIG. 213.—Commercial shapes of refined copper.

copper, and removed only after the pipe had been withdrawn. Practically no S was driven off; the 0.030 per cent S, high for electrolytic copper, remained about constant. The specific-gravity and electric-conductivity curves show the same general trend as does that of the Cu content. The tensile strength shows a gradual decrease as the poling progresses, and the elongation a corresponding increase. Before taking samples Nos. 12 and 13, the bulk of the copper in the furnace was cast, and the remaining small amount overpoled until it threw a worm. No regularity can be expected from these two samples

Clevenger[1] gives the following temperatures as averages of a number of refining furnaces: charge melted and ready to rabble 1,141° C.; after 25 min. flapping 1,103°; after 75 min. 1,103°; at end of flapping 1,103°; after 20 min. poling 1,107°; before ladling 1,125°; after ladling 20 min. 1,121° C.

169. Casting.—When the copper has "come to nature" or arrived at the tough-pitch stage, it is ready for casting into marketable forms. These are ingots, ingot bars, wire bars, cakes, slabs, and billets, which are illustrated in

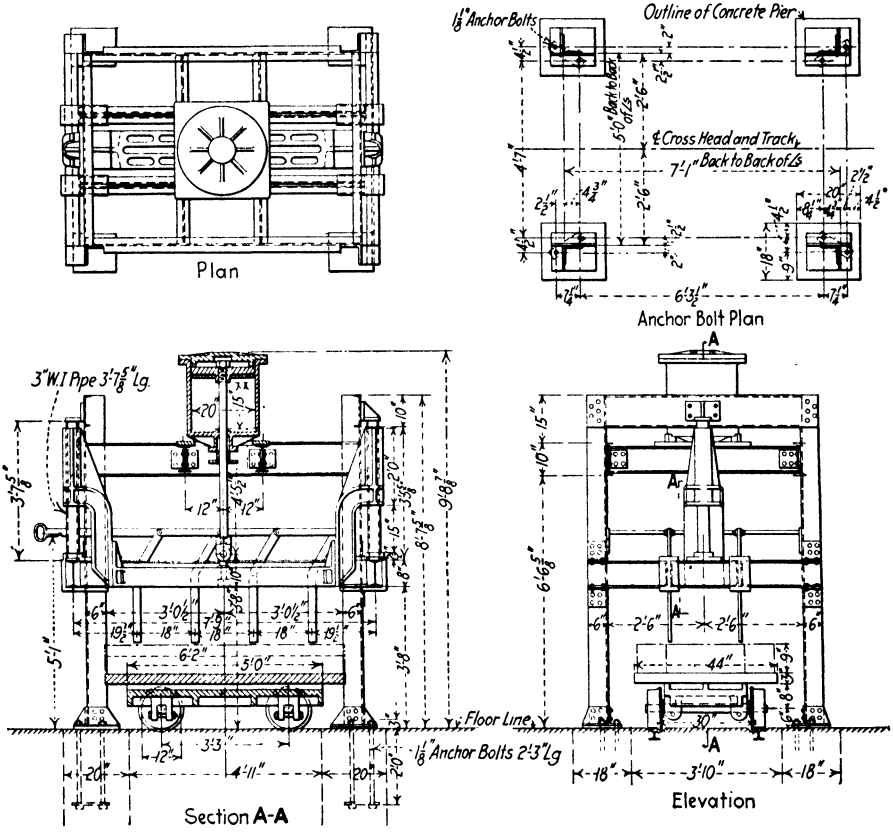

FIGS. 214–217.—Raritan mold press.

Fig. 213. The ingots usually weigh 10 to 25 lb. The use of the ingot bar is merely for convenience in shipping. When used for melting, it may be easily broken at the deep notches.

The ingot mold is of cast copper. They were formerly made one at a time in a hand press, which forced an iron pattern into molten copper held in a split-iron form. After the copper solidified, the iron pattern was withdrawn, the resulting ingot mold removed from the iron form, and the operation repeated. At present the hand presses have been replaced by hydraulic presses (Figs. 214 to 217),

[1] *Met. Chem. Eng.*, 1913, XI, 448.

below which are tracks on which cars carry the molten copper and remove the completed molds.

Wire bars are trapezoidal in cross-section with tapering ends for convenience in rolling into rods. The weight may vary from 135 to 770 lb. and the length from 38 to 100 in. The molds are of copper and are cast in the same manner as ingot molds.

Cakes and slabs are square, oblong, or round flat castings varying greatly in size. They are usually cast flat but at Great Falls a wedge-shaped cake has been developed which has the advantage of two smooth sides for rolling.

The casting temperature of copper ought to be low, as a high temperature causes rising in the mold. A casting should have a level, in some cases a slightly crowned surface which appears ruffled and is brownish from oxidation.

Prior to about 1895 all copper was cast by ladling, and a small amount is still cast in this way. In order to permit increasing the size of a furnace, another means of removing the copper had to be devised. In 1895, W. H. Peirce tapped copper from the furnace into ladles,[1] holding about 200 lb., which were suspended from an overhead trolley, moved horizontally by hydraulic power, raised by compressed air, and otherwise manipulated by two men. The flow of copper from the furnace was regulated by plugging the taphole. This difficulty and the splashing of the metal while pouring, which caused it to adhere to the molds (cold sets), were the reasons for abandoning this method of casting the finished product.

In 1897 A. L. Walker constructed his casting machine (Figs. 218 and 219), which is in use at many refining plants. The metal is drawn off gradually from the surface of the bath at the end or the side of the furnace. In the brickwork there is left open a tapping slot, which is filled by ramming a mixture of raw clay and ground brick, or sand and coke, which will be hard enough to withstand the pressure on the inside, but soft enough to allow cutting a gutter to draw off the copper. For safety, this breast is tamped against, and held in place by transverse iron bars, 1 in. square and 16 in. long, placed either on top of one another or spaced about 2 in. apart, and held by guide-shaped lugs cast in the end or side plates of the furnace. The copper is run from the furnace through a one- or two-spout trough *A*, lined with a mixture of cement, clay, and sand, into a suspended ladle *B*, lined with cement and sand and painted with bone ash, and thence through as many spouts as there are molds (nine in the figure), into tilting molds *C*, held in a frame, resting on radial arms *D*, of turntable *E*.

Ladle *B* rests near the front with trunnions J on curved supports attached to a rocking shaft *K*, which allows moving forward for pouring and backward for clearing, while table *E* is rotated; it is raised at the back by hydraulic power *P* for pouring, and lowered for clearing.

The frame holding the tilting molds *C* has trunnions *Q*, resting in recesses at the ends of the cast-iron arms *D*, to permit inverting of molds and dumping of copper. The trunnions are placed in front of the center of gravity, so that the rear flange of a mold will rest on the cross-bar of an arm. The radial arms

[1] Illustration, *Mineral Ind.*, 1898, VII, 253.

D are hung from the turntable *E*, and are made adjustable to suit larger and shorter molds, which make a complete ring. The turntable *E* is revolved in

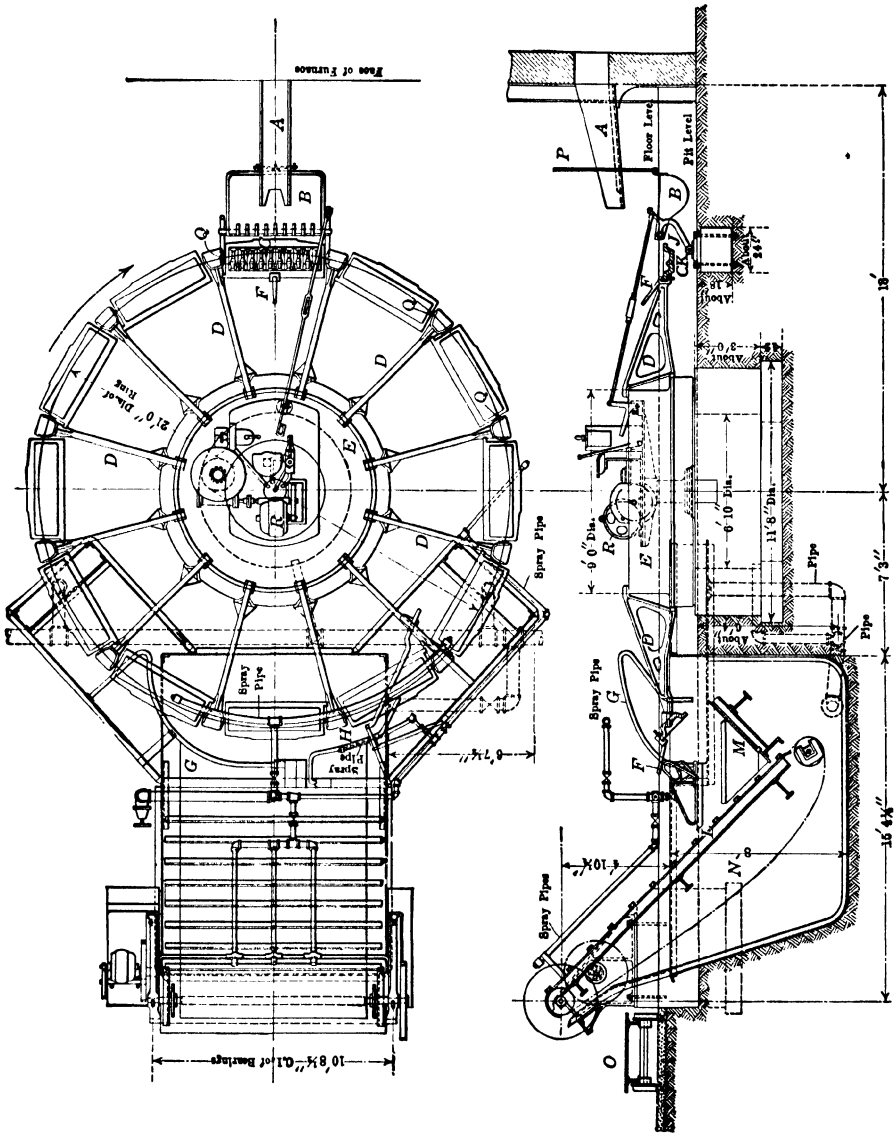

FIGS. 218–219.—Walker casting machine.

a circular path on rollers by a motor *R*. The three motions, moving and raising of ladle *B* and rotating of table *E*, are controlled by one man on a stationary platform in the center of *E* by means of two levers and a rheostat.

In casting wire bars, two molds replace the nine ingot molds shown in the drawing, and a two-spout ladle the one with nine spouts; the table is moved slowly while the molds are being filled.

In casting plates or anodes, a single mold replaces the set of ingot molds; the maching stands still while the metal is poured from a ladle having three spouts.

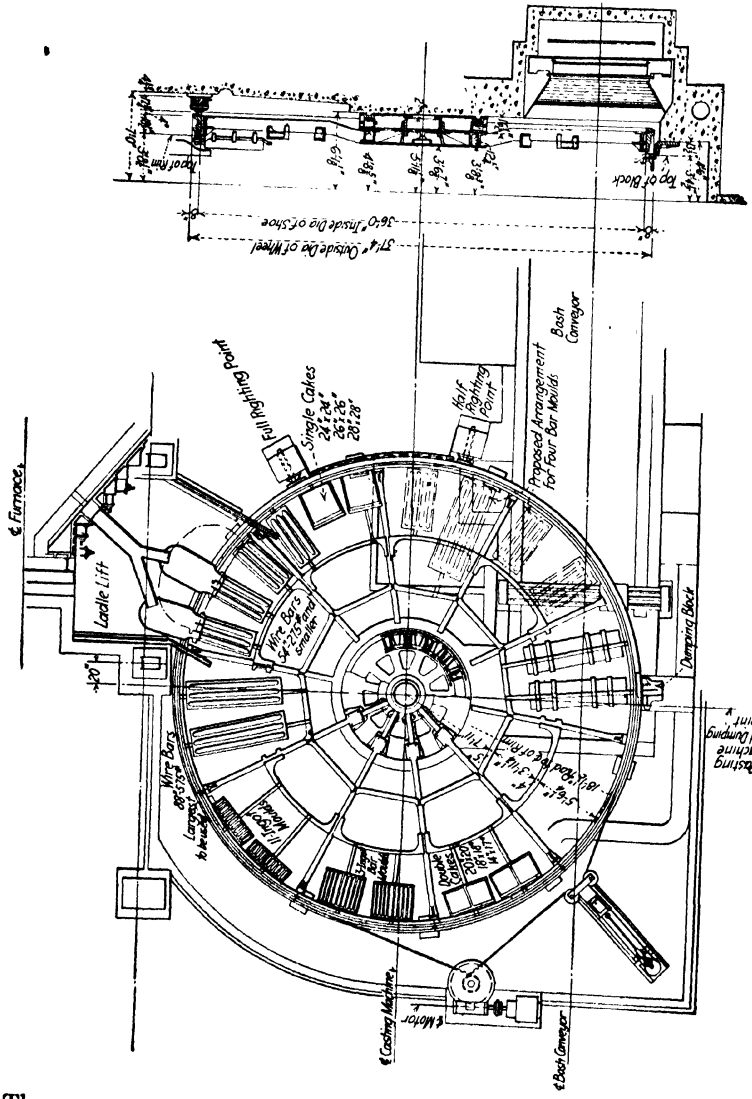

FIGS. 220–221.—Clark casting machine.

The cast copper cools while the filled molds travel from ladle *B* to water bosh *N*. With wire bars and plates or anodes, the cooling is hastened by blowing compressed air onto the metal. As a mold approaches the water bosh, its tipping arm *F* rises on an inclined bar *G*, which raises it and turns it over that

it may fall against a rest, whereupon the casting is dumped from the inverted mold onto the grating *M* in water bosh *N*, where, sliding down, it is caught by the arms of the conveyer *L*, raised, and discharged onto car *O*. As the table *E* travels along its circular path, the inverted arm is raised in the same manner by a second inclined bar *H*, and the mold righted. This is now whitewashed with bone ash, and dries before it returns to the spout *B*.

A machine casts 65,000 lb. anodes, or 53,000 lb. wire bars, or 50,000 lb. ingots per hour. The labor required is 1 furnaceman, 1 machineman, 2 helpers, 1 boy for painting molds with bone ash; the power is 2.64 kw.

The Clark casting machine of the Raritan works, Perth Amboy, N. J. (Figs. 220 to 221), resembles in its general features the machine of Walker; one characteristic is that the wire-bar molds are placed radially instead of tangentially, and can, therefore, be made of any length desired.

The link belt or straight-line casting machine of C. H. Repath is in operation at several smelting and refining plants for casting wire bars and anodes. It consists[1] essentially of a series of copper molds carried by an endless link belt in front of a pouring ladle similar to that in the Walker machine. The molds, which receive the metal at one end, are mounted on four-wheel carriages; the front pair of wheels travels on one set of rails, the back on another, so that the inclination of the mold is governed by that of the rails. A wire-bar mold, arriving before the spout, is filled from one end while in a horizontal position, is lowered in the same position into a water bosh, remains there long enough for the metal to solidify, is removed from the water, moved up an inclined plane over the driving head, and the bar then dumped onto a truck. The mold is painted with a bone-ash emulsion on its return path and dries before it arrives underneath the spout to be refilled. Blowing with preheated air hastens the drying.

In casting anodes, the water bosh is omitted, and the metal cooled by a water spray. In order to prevent the anode from sticking to the mold, the latter has a pin which automatically forces out the anode from below, whereupon, after passing the driving head, it is dumped onto a pair of suspended arms, to be trimmed and then removed by tongs suspended from a traveling suspended air hoist to the anode carriage.

A conveyer handles 50,000 lb. anodes per hour, with an expenditure of 17 hp.

A tilting reverberatory furnace is in operation at Tacoma.[2] Tilting oil-heated furnaces at El Paso, Tex., Hayden, Ariz., and other places remove the converter copper and deliver it to a casting machine. The cost of melting, refining, and casting cathodes into ingots is, in eastern refineries, about $3.50 per ton of ingot (1913).

Melting Cathodes.—A new method of melting cathode copper was developed by L. Addicks and A. Marks,[3] at the works of the United States Metals Refining Co., Chrome, N. J. The essential feature of it is that stacks of cathodes are added from time to time with a charging machine (page 263), to the molten

[1] *Mineral Ind.*, 1900, IX, 273.

[2] WILLEY, *Eng. Mining J.*, 1906, LXXXII, 146.

[3] U. S. Pat. 980584, Jan. 3, 1911.

TABLE LXXIV.—GENERAL DATA ON FURNACE REFINING OF COPPER

	American Smelting and Refining Co., Perth Amboy, N. J.	Raritan Copper Works, Perth Amboy, N. J.		United States Metals Refining Co., Chrome, N. J.	American Smelting and Refining Co., Tacoma, Wash.
		Wire-bar furnace	Anode furnace		
Length of hearth	50′	37′ 6″	43′	40′ 3″	36′
Width of hearth at bridge	8′	17′	14′ 3″	14′ 4″	15′
Width of hearth at middle	14′ 7″	17′	14′ 3″	14′ 4″	15′
Width of hearth at flue	6′	7′	7′ 3″	18″	Tapers to flue in last 7′
Hearth area, square feet	665	559	553	496	490
Hearth depth, inches	22	35	28	.....	14 to 16
Hearth thickness, inches	24 bridge, 21 front, 19 charge side, 17 taphole	21 silica sand, 9 clay brick	20 silica, 9 clay brick	12 silica, 13 clay brick	20
Hearth material	Silica	.....	.....	.....	Silica sand
Hearth support	12″ concrete, 12″ brick piers, 1½″ iron plates, 13″ firebrick	Concrete	Concrete	Cast-iron plates	Concrete and fire brick pierced with 38 3″ pipes for cooling
Grate, length	9′	Oil Fired	Oil Fired	8′ 3″	Oil Fired
Grate, width	8′ 4″			7′ 4½″	
Grate, depth below top of bridge	4′ 8″			5′ 8″	
Grate area, square feet	75			60.8	
Ratio hearth to grate area	8.87 to 1			8.15 to 1	
Roof, height above bridge	2′ 10″	3′ 6″	3′ 6″	3′ 7″	4′ 8″
Roof, height above hearth at bridge	6′ 4″	7′ 9″	7′ 6″	7′ 2″	6′ 10″
Roof, height above hearth at flue	3′ 6″	5′ 10″	4′ 2¾″	4′ 9″	3′ 6″
Bridge, width	55½″	10′	8′	4′ 5½″	15′
Vulcatory (flue leading out of roof)	2′ 8″ × 4′ 8″ × 8′	3′ × 3′ 10″	2′ 8″ × 3′ 5″	2′ 10″ × 4′ 6″	3′ × 4′
Flue leading to chimney	.....	2′ 10½″ × 4′ 8″	2′ 6″ × 4′	2′ 10″ × 4′ 6″	3′ 8″ × 6′
Flue leading to boiler	.....	5′ 1″ × 5′ 11″	5′ 1″ × 6′	2′ 10″ × 4′ 6″	
Chimney inside diameter	3′ 8″ × 3′ 8″	6′ 6″	6′ 6″	Use fans	5′ 2″ × 5′ 2″
Chimney height	90′	200′	200′	None	62′ set 18′ above floor
Waste heat boiler, number, kind	350 hp. Sterling	603 hp. Sterling	603 hp. Sterling	264 and 400 hp.	None
Charge, character	Copper cathodes	Cathodes	Blister	Blister and cathodes	Cathodes

Time of working, hours	24	24	24	24		23¾
Time of charging, hours	2	2	2½	2		1½
Time of melting & raking, hours	9	10	12	9		11
Time of fining, hours	2½	5	4 to 6	2½		2 hr. 20 min.
Time of poling, hours	3½	2½	1	2½ to 3		3 hr. 40 min.
Time of casting, hours	6	4 to 6	4 to 5	4 to 4½		4
Time of cleaning up etc., hours	1	....	...	.....		1 hr. 15 min.
Tons in 24 hr	200	250 to 275	275 to 325	226		178
Tons per square foot hearth in 24 hr	0.30	0.50	0.5	0.456		0.36
Oil, gallons per ton charge	...	20	20			
Charcoal, pounds per ton charge	8	10	...	8 to 9 coke		3 to 4
Poles, kinds, number per charge	Hardwood 18	Greenwood 25	Greenwood 10	Oak 18 to 20		Fir 35
Copper produced, character	Market copper	Refined Cu	Anodes	...		Refined Cu
Copper, per cent of charge	99 93 to 99.96	98.5	98.0	...		99.92
Copper, manner of casting	Walker wheel	Clark wheel	Link belt conveyer	Walker wheel		Walker wheel
				Anodes	Wire bar	
Slag, SiO_2, per cent	30	33	45	47.3	42.9	39 to 42
Fe(Mn)O, per cent	5	3	6	8.24	5.37	6
Al_2O_3, per cent	6	3	3			
CaO, per cent	1	1	3	2.6	2.77	3
Cu, per cent	40	50	35	26.2	35.2	32 to 35
Per cent of charge	1½	1.5	2	1 to 2.5	1 to 1.5	1.8
Slag diposition	Resmelted in blast furnace	Blast furnace	Blast furnace	Blast furnace		To converters
Labor, 8-hr. shift	12 men	.....	.....	8 men		5 men

bath of copper while the casting is going on. A furnace, *e.g.*, receives 340,000 lb. cathodes; these are melted, fined (making 10,000 lb. slag), and poled in about 18 hr., and leave 330,000 lb. of copper in the furnace. This is cast at the rate of 70,000 lb. per hour. Half an hour after the beginning of the cast, 40,000 lb. of cathodes are charged; after three-quarters of an hour, 40,000 lb. are again introduced; and, after a lapse of an additional hour and one-quarter, the third addition of 40,000 lb. is made. In 2½ hr. 175,000 lb. of copper have been cast, leaving in the furnace 275,000 lb., which are now drawn off into the molds in about 4 hr. Thus in 24½ hr., 450,000 lb. of copper are treated and cast instead of 330,000 lb. in 22½ to 22¾ hr. While casting, the fire has to be kept up, and the metal poled occasionally, when the set shows signs of the copper becoming too low.

170. Table of Refining Practice.—In Table LXXIV some data from modern refining practice are collected. These require no discussion.

Electric Smelting

The use of electrothermic reduction for copper ores has little technical advantage over the common methods in general use. The employment of electric furnaces is, therefore, an economic consideration. It is possible that, where fuel is high and electric power cheap, electric smelting may be found desirable. At Sulitjelma, Norway,[1] the Westly furnace has been successfully operated. It is of the reverberatory form with a hearth 7 by 18 ft. Four 12-in. carbon electrodes extend through the roof and dip into the slag. The principle of operation is similar to the Heroult furnace. These electrodes are consumed at the rate of 3 or 4 kg. per metric ton of ore. The furnace produces 25 tons of matte per day with a consumption of 700 kw.-hr. per ton of charge.

Electric furnaces for copper refining would have a possible advantage in preventing contamination of the bath by impurities or gases from the fuel, but as yet they have not been used except in small foundry installations.

[1] *Eng. Mining J.*, 1922, CXIII, 356.

CHAPTER VIII

LEACHING OF COPPER

A. LEACHING COPPER ORE

171. Leaching Copper Ores in General.[1]—Leaching is suited for low-grade ore with finely disseminated copper mineral and a gangue that is not attacked by the solvent. The simplest case is the one in which the copper occurs as water-soluble sulphate; the ore is also readily amenable to solvents if the copper is present in the form of oxide or carbonate; with sulphide ore the matter is different, as sulphide copper minerals are not sufficiently attacked by the ordinary solvents, and therefore have to undergo a preliminary treatment in order to render them soluble. This is done by converting them into sulphate, or oxide, or chloride.

172. Solvents.—The leading solvents are H_2O, H_2SO_4, and HCl; in second order come H_2SO_3, $Fe_2(SO_4)_3$, and solutions of $MetCl_x$, NH_3, and NH_3 compounds; electrolytic extraction has also been tried.

H_2O.—The solubilities of the various copper compounds in water have already been given on pages 60 and 61.

H_2SO_4.—This quickly dissolves melaconite, azurite, malachite, and more slowly chrysocolla; cuprite is decomposed into CuO and Cu; an ore carrying cuprite has to be oxidized (weathering, roasting) before treatment. H_2SO_4 does not readily attack Fe_2O_3. Hot dilute solutions of $Fe_2(SO_4)_3$, and especially of $FeSO_4$, are likely to form basic salts which contaminate the copper liquors. H_2SO_4 has the advantage of permitting ready shipment in steel tanks.

HCl.—This is a stronger solvent than H_2SO_4, hence the solutions will be more charged with foreign matter than when H_2SO_4 is used; insoluble oxychlorides are less readily formed than basic sulphates. HCl solutions charged with $MetCl_x$ are solvents for Cu_2Cl_2 and AgCl. As HCl cannot be readily shipped, it can be used only near the sources of production, *i.e.*, chemical plants or metallurgical works carrying on chloridizing roasting.

H_2SO_3.[2]—H_2SO_3 readily dissolves oxide copper minerals, with the exception of Cu_2O,[3] as is the case with H_2SO_4; thus $CuO + H_2SO_3 = CuSO_3 + H_2O$, but

[1] BODE, *Dinglers spolytech. J.*, 1879, CCXXXI, 254, 357, 428; DOUGLAS, *Min. Res.* U. S., 1882, 271; COLLINS, *Inst. Mining Met.*, 1893–94, II, 4; CH. DEFRANCE, "Extraction du Cuivre, de l'Argent et de l'Or par a Voie Humide," Baudry, Paris, 1897; EISSLER, M., "Hydrometallurgy of Copper"; Corsby, Lockwood & Son, London, 1902; TRUCHOT, P., "Les Pyrites," Dunod-Pinat, Paris, 1907; GREENAWALT, W. E., "The Hydrometallurgy of Copper," McGraw-Hill Book Co., Inc., New York, 1912; W. L. AUSTIN, *Mining Meth.*, 1910–11, II, 5, 31, 69, 121, 135, 153, 187, 211, 241, 257, 281; 1911–12, III, 339, 355, 368, 381, 403, 433, 465, 474, 497, 531, 554.

[2] AUSTIN, *Mining Meth.*, 1911, II, 241.

[3] JENNINGS, *Eng. Mining J.*, 1908, LV, 822.

$CuSO_3$ is unstable; $3CuSO_3 + CuO = (Cu_2SO_3 + CuSO_3) + CuSO_4$, being changed slowly into a mixture of cupro-cupric sulphite and cupric sulphate; the former, slightly soluble in H_2O and readily so in solutions containing H_2SO_3 or $CuSO_4$, is decomposed when heated under pressure, *viz.*, $Cu_2SO_3 + CuSO_3 = 2Cu + CuSO_4 + SO_2$. The solvent H_2SO_3 forms the basis of the Neill, Van Arsdale, and the other processes.

$Fe_2(SO_4)_3$.—This salt attacks Cu, its oxide, as well as its sulphide: $Cu + Fe_2(SO_4)_3 = CuSO_4 + 2FeSO_4$; $3CuO + Fe_2(SO_4)_3 = 3CuSO_4 + Fe_2O_3$; $Cu_2S + 2Fe_2(SO_4)_3 = 2CuSO_4 + 4FeSO_4 + S$. Austin[1] found at Cananea that ZnS was readily attacked, Cu_2S slowly, and $CuFeS_2$ hardly at all. Thomas,[2] who examined systematically the behavior of $Fe_2(SO_4)_3$ came to similar results; he ascertained (1) that the presence of much $FeSO_4$ affected unfavorably the dissolving power of $Fe_2(SO_4)_3$ for Cu_2S; (2) that dead-roasting sulphide produced oxide not readily attacked, and that therefore the decomposition ought to resemble a sulphatizing roast and be carried on between 450 and 480° C.; and (3) that the grain size need not be smaller than 60-mesh. Abdock[3] found at Rio Tinto that one-half of the Cu in the pyrite could be quickly extracted by $Fe_2(SO_4)_3$. A weak point in the use of $Fe_2(SO_4)_3$ lies in the fact that the $FeSO_4$ formed has to be regenerated. For the complete regeneration, $2FeSO_4 + H_2SO_4 + O = Fe_2(SO_4)_3 + H_2O$, fresh H_2SO_4 has to be added to the charge, as aeration alone of a warm solution, $10FeSO_4 + 5O = 3Fe_2(SO_4)_3 + Fe_4SO_9$, causes a loss of 40 per cent of the iron in the form of basic salt. The choice between the two methods is governed by the cost of the two materials required in the process, 10 lb. $FeSO_4$ against 2 lb. H_2SO_4 of 66° Bé. Other researches are those of Millberg[4] and Thompson.[5]

$FeCl_2$.—This forms the basis of the Hunt-Douglas process I (§208). It acts upon copper oxides as follows: $3Cu_2O + 2FeCl_2 = 2Cu_2Cl_2 + Cu_2 + Fe_2O_3$ and $3CuO + 2FeCl_2 = Cu_2Cl_2 + CuCl_2 + Fe_2O_3$, hence Cu_2O has to be absent, or, if present, has to be first converted into CuO. As Cu_2Cl_2 is insoluble in H_2O, but soluble in brine, $FeCl_2$ dissolved in brine will extract the CuO from the ore and cause the precipitation of Fe_2O_3.

Fe_2Cl_6 is the reagent used in the Doetsch process (§206) to dissolve copper sulphides, *viz.*, $Cu_2S + Fe_2Cl_6 = Cu_2Cl_2 + 2FeCl_2 + S$, and $Cu_2S + 2Fe_2Cl_6 = 2CuCl_2 + 4FeCl_2 + S$. Froehlich[6] found that in his leaching apparatus (page 321) chalcocite was readily decomposed, that chalcopyrite, if given a slight oxidizing roast, yielded nearly all of its copper, and that tetrahedrite gave up only 34 per cent of its Cu. Stokes[7] ascertained that enargite was not attacked.

$CuCl_2$, used in the Hoepfner process (§ 207), acts upon Cu, Ag, and their sulphides: $Cu + CuCl_2 = Cu_2Cl_2$, $CuS + CuCl_2 = Cu_2Cl_2 + S$, $Cu_2S +$

[1] *Mining Meth.* 1910, II, 5.
[2] *Metallurgie*, 1904, I, 8, 39, 59.
[3] *Mineral Ind.*, 1900, IX, 335.
[4] *Mineral Ind.*, 1906, XV, 292.
[5] *Electrochem. Ind.*, 1904, II, 225.
[6] *Metallurgie*, 1908, V, 206.
[7] *Econ. Geol.*, 1907, II, 23.

$2CuCl_2 = 2Cu_2Cl_2 + S$; $Ag_2 + 2CuCl_2 = 2AgCl + Cu_2Cl_2$, $Ag_2S + 2CuCl_2 = 2AgCl + Cu_2Cl_2 + S$. On account of the insolubility in H_2O of the Cu_2Cl_2 formed, the $CuCl_2$ has to be dissolved in brine; Cu_2Cl_2 has a powerful chloridizing effect upon sulpharsenide and sulphantimonide silver minerals (Kröhnke process).

NH_3 and some of its salts are solvents for copper. Thus, Cu, NH_3, H_2O,O form $CuO{\cdot}xNH_3$, a blue solution; H_2CuO_2 is readily soluble in $NH_3{\cdot}H_2O$; CuO is insoluble in NH_3, but soluble if this contains some ammonia salt, *e.g.*, NH_4HCO_3, forming a double salt $CuCO_3{\cdot}xNH_3$; Cu_2O is readily soluble, forming a colorless solution which turns blue upon exposure to air; Cu_2S is readily attacked, $Cu_2S + O + NH_3 + nH_2O = H_2Cu_2O_2 + S + NH_3 + (n - 1)H_2O$. The action of NH_4 is slow unless an oxidizing agent (air, MnO_2, $CaClO_2$) is present; the gas is readily recovered from copper solutions by distillation. The use of NH_3 H_2O charged with some NH_4 salt as solvent seems to be suitable with an ore having a gangue (calcareous) that is readily attacked by acids. Ammonia liquor has been frequently suggested[1] and used for the treatment of oxide copper ores, but has not been quite successful because NH_3 was retained by the ore, the apparatus being imperfect and the cost of treatment too high. As at present the cost of NH_4 salts is less, and the difficulty with apparatus has been overcome, there is a new field for the solvent.

Direct electrolytic solution of copper from raw and roasted ores has been tried, but has proved a failure, if for no other reason than the imperfect electric contact shortly after the process has been started.

173. Precipitants.—From its solutions copper is precipitated mainly by Fe, FeS, H_2S, and SO_2 gas; solutions of CaS_5, Na_2S, and emulsions of H_2CaO_2 have been tried. Electrodeposition using an insoluble anode has come into use in recent years. All solutions have to be clarified before the copper is precipitated, nor ought they to be too concentrated.

Fe.—The purer the iron and the finer its state of division the more energetic is the action; hence, ground iron sponge with 70 per cent Fe produced by the reduction of purple ore[2] or other iron oxides acts the quickest; then follow, in the order given, wrought iron, gray iron, steel, white iron. Wrought iron furnishes a coarse precipitate, gray iron spongy copper, white iron a metal that is more coherent than that from gray iron. In practice, ordinarily, the cheapest available scrap, including the tin can, serves to recover copper. According to $CuSO_4 + Fe = Cu + FeSO_4$ and $Cu_2Cl_2 + Fe = 2Cu + FeCl_2$, 88.8 or 44.4 lb. Fe are required for 100 lb. Cu. In practice, $2\pm$ lb. Fe are consumed per pound of Cu with a cupric salt, owing to the formation of basic ferric salts and the liberation of free acid or ferric salt. This is especially the case with H_2SO_4 as solvent ($2FeSO_4 + H_2O + O = Fe_2SO_6 + H_2SO_4$ or $6FeSO_4 + 3O = 2Fe_2(SO_4)_3 + Fe_2O_3$), less so with HCl: ($6FeCl_2 + 3O = 4FeCl_3 + Fe_2O_3$).

[1] *Berg. Hüttenm. Z.*, 1852, XI, 799: BARRUEL, 1860, XIX, 111; STROHMEYER, 419; BISCHOFF, 1862, XXI, 140; "Commern Works," 230; JUNG, 1868, XXVII, 414; Summary—*Z. Berg. Hütten. Sal. Wesen i. Pr.*, SCHNABEL, 1880, XXVIII, 262; also SCHNABEL-LOUIS, "Handbook of Metallurgy," 1905, I, 679.

[2] LUNGE, *op. cit.*, I^3, p. 1505.

In order to diminish the consumption of Fe, Zoppi[1] reduced $Fe_2(SO_4)_3$ to $FeSO_4$ by means of SO_2 gas generated in a kiln: $Fe_2(SO_4)_3 + SO_2 + 2H_2O = 2FeSO_4 + 2H_2SO_4$. At the same time he reduced As_2O_5 to As_2O_3, which was precipitated by Fe and later separated from the Cu by washing. The H_2SO_4 formed in the reduction dissolved some Fe, but less than the $Fe_2(SO_4)_3$ in the original solution. At Rio Tinto,[2] $Fe_2(SO_4)_3$ soultions are passed over ore heaps, and FeS_2 reduces them to $FeSO_4$, as shown by $7Fe_2(SO_4)_3 + FeS_2 + 8H_2O = 15FeSO_4 + 8H_2SO_4$. Neutralization of free H_2SO_4 with H_2CaO_2 has been suggested, whereby Fe_2O_3 and Fe_2SO_6 would be precipitated with some $CaSO_4$, and the solution at the same time clarified.

In order to hasten the precipitation by Fe, Patera,[3] later Peck,[4] and more recently Austin[5] have proposed the addition of coke,[6] as the coke-iron couple formed causes Cu to fall out more quickly and more completely than when Fe is used alone; the formation of basic salts is also diminished, but the action of Fe upon $Fe_2(SO_4)_3$ is also rendered more energetic, so that the liquor freed from Cu has to be removed from the vat as quickly as possible. High vertical tanks with entrance for Cu-bearing liquor at the bottom and discharge for Cu-free liquor at the top are recommended. The tank of Fröhlich (§206) is advocated by Austin.

Other Reagents.[7]—FeS[8] precipitates Cu from $CuSO_4$; H_2S,[9] generated by several processes, has been used and the CuS separated by filter pressing.

SO_2 acting under pressure upon a copper salt heated in a closed vessel causes Cu to separate: $CuSO_4 + SO_2 + 2H_2O = Cu + 2H_2SO_4$; the process has been patented by Juman.[10]

CaS_5 and Na_2S solutions have been suggested and their advantages in not precipitating As and Sb urged.

H_2CaO_2 gives a bulky precipitate of H_2CuO_2 or Cu_2O mixed with $H_6Fe_2O_6$ difficult to handle; in sulphate solutions, $CaSO_4$ + aq. falls out at the same time.

In the electrodeposition of Cu from aqueous solutions using insoluble electrodes, Cu is plated on the cathode, while SO_4 or Cl is set free at the anode. Several attempts have been made to utilize the energy of the SO_4 or Cl anion by having it act chemically upon the electrolyte surrounding the anode and bringing it back to its original higher state of oxidation or chlorination, and thus to neutralize to a large extent the counter e.m.f. that would have to be overcome otherwise.[11] With sulphate solutions SO_2 gas has been introduced at the anode (Carmichael process), so that the O, set free by the action of the acid radical

[1] *Ann. mines*, 1876, IX, 190; *Berg. Hüttenm. Z.*, 1876, XXXV, 363.
[2] ABDOCK, *Mineral Ind.*, 1900, IX, 234.
[3] *Dinglers polytech. J.*, 1867, CLXXXIV, 134.
[4] *Oesterr Z. Berg. Hüttenw.*, 1880, XXVIII, 613, 626.
[5] *Mining Meth.*, 1911, II, 120.
[6] SLAUGHTER, U. S. Pat. 1001466, Aug. 22, 1911.
[7] KERL, B., "Metallhüttenkunde," Felix, Leipsic, 1881, p. 243.
[8] CROASDALE, *Eng. Mining J.*, 1914, XCVII, 745.
[9] BUDDÉUS, *Berg. Hüttenm. Z.*, 1904, LXIII, 73.
[10] *Eng. Mining J.*, 1908, LXXXVI, 133.
[11] Processes of SIEMENS-HALSKE, HOEPFNER, §207; GREENAWALT, §185.

SO_4 upon H_2O (*viz.*, $SO_4 + H_2O = H_2SO_4 + O$), may be removed, and thus its counter e.m.f. at the anode not only more or less neutralized, but some of the H_2SO_4, lost in the leaching, restored. In the Laszczynski process, the O is allowed to pass off, but the $FeSO_4$ is prevented from being converted into $Fe_2(SO_4)_3$ by enclosing the anode in a bag.

174. Leaching Apparatus and Method.—The leaching vats used may be of wood, tarred or lead-lined; they are also built of acidproof brick and asphalt concrete.

The liquors are elevated[1] by means of acid eggs, air-lift pumps, reciprocating and centrifugal pumps, and perhaps screw conveyors.

The method of leaching is usually that of percolation; mechanical stirring of ore or circulation of solvent is found occasionally;[2] revolving barrels are the exception on account of excessive cost. The countercurrent system of continuous leaching, adopted from the treatment of gold ores with potassium cyanide, has been tried upon acid treatment of copper ores, but no large plant is in operation.

The operation of leaching, when conducted systematically, is such that only rich solutions go to the precipitating vats; fresh or only slightly charged solvents are passed over nearly exhausted ore; and partly saturated solutions, over fresh ore (countercurrent principle).

For filtering, false bottoms covered with suitable filtering media are common; filter presses or suction filters are used mainly for precipitated copper.

175. Precipitating Vat and Method.—The precipitating vats are usually of wood. With stationary vats, the copper liquor is made to pass through a series of tanks, or to circulate in a single tank, or to flow through long troughs arranged in step form.

Precipitation may be accelerated in stationary vats by mechanical stirring or circulation, or by the use of revolving barrels.

The precipitated copper is usually contaminated with impurities. A pulverulent precipitate may have to be washed before it is dried, and smelted in a reverberatory furnace for blister copper or for matte, according to its character.

176. Outline of Leaching Processes for Ore.—The subject of leaching copper ore will be treated under the following main headings:

I. Sulphate Ore.
  1. Mine Water.
  2. Tailing and Dump.
II. Oxide Ore.
III. Sulphide Ore.
A. Conversion of Sulphide into Sulphate:
  1. Weathering.
  2. Sulphatizing Roast.
  3. With Ferric Sulphate, $Fe_2(SO_4)_3$.

[1] See HOFMAN, "General Metallurgy," 1913, p. 687 *et seq.*

[2] Parral tank: MACDONALD, *Eng. Mining J.*, 1914, XCVII, 325, 422; *Met. Chem. Eng.*, 1914, XII, 141.

B. Conversion of Sulphide into Oxide:
   1. Oxidizing Roast.
C. Conversion of Sulphide into Chloride:
   1. With Ferric Chloride , ($FeCl_3$).
   2. With Cupric Chloride, ($CuCl_2$).
   3. With Oxidizing Roast and Ferrous (Calcic) Chloride, ($Fe(Ca)Cl_2$).
   4. With Chloridizing Roast of:
      (*a*) Crude Ore.
      (*b*) Roasted Ore.

177. Leaching Sulphate Ore.—Ores in which copper is found as water-soluble sulphate do not occur in sufficient quantity to make their treatment the object of a separate operation. However, old workings of a mine, mine fillings, and tailing dumps that have been exposed to the oxidizing influences of air and water furnish waters charges with sufficient $CuSO_4$ to pay for the recovery of the Cu.

The mine waters of Schmoellnitz, Hungary,[1] have been treated for years, as have those of the Rammelsberg mine, Germany;[2] Wicklow, Ireland;[3] Ashio, Japan;[4] and other localities.

In the United States the waters of the Butte mines, Mont.;[5] of the Copper Queen mine, Bisbee, Ariz.;[6] of the Iron Mountain, Cal.;[7] and the tailing dumps of Butte, Mont.; Wallaroo, Australia;[8] Gumeshevsky, Russia[9] furnish examples of modern modes of operating.

178. Mine-waters. 1. *Schmoellnitz, Hungary.*—The compositions of the mine waters, Apr., 1859, before and after cementation are given in Table LXXV.

TABLE LXXV.—MINE WATER OF SCHMOELLNITZ, HUNGARY

1 cu. m. mine water contains	Contains kilograms of									
	$FeSO^4$	$Fe_2(SO_4)_3$	Fe	$CuSO_4$	Cu	$ZnSO_4$	$Al_2(SO_4)_3$	$CaSO_4$	$MgSO_4$	Total
Before cementation	5.86	8.12	4.68	1.43	0.56	0.86	8.81	1.11	5.35	31.54
After cementation	18.17	0.19	6.77	0.08	0.04	0.79	7.94	1.06	5.10	33.33

The waters pass through 12,400 ft. of launders made of boxes 12 ft. long, 12 in. wide, 12 in. deep, which have a fall of 1 in 25, and are charged with

[1] STEINHAUSZ, *Oesterr. Jahrb.*, 1896, XLIV, 314; FÄHNDRICH, *Z. Berg. Hütten. Sal. Wesen i. Pr.*, 1898, XLVI, 232; *Berg. Hüttenm. Z.*, 1904, LXIII, 13, 41, 73.

[2] BRÄUNING, *Z. Berg. Hütten. Sal. Wesen. i. Pr.*, 1877, XXV, 132.

[3] ARGALL, *Mining Sci. Press.*, 1906, XCII, 325, XCIII, 111.

[4] RICHARDS, *Trans. A. I. M. E.*, 1912, XLIII, 464.

[5] Editor, *Mining Rep.*, 1905, LII, 618; BUSHNELL, *Eng. Mining J.*, 1907, LXXXIII, 1229, *Mining Sci. Press*, 1908, LVII, 530, 1911, CIII, 649; PROBERT, *op. cit.*, 1908, XCVI, 27; STONE, *Eng. Mining J.*, 1908, LXXXVI, 953; Editor, *Met. Chem. Eng.*, 1910, VIII, 614; GILLIE and SOMMERFELDT, *Metallurgie*, 1911, VIII, 187; FEBLES, *Trans. A. I. M. E.*, 1913, XLVI, 177.

[6] CHITTENDEN, *Eng. Mining J.*, 1908, LXXXVI, 853; *Mineral Ind.*, 1916, XXV, 252.

[7] CAMPBELL, *Mining Sci. Press*, 1907, XCIV, 57.

[8] WILLIAMS, *Eng. Mining J.*, 1908, LXXXVIII, 58.

[9] SIMON, *Trans. Inst. Min. Met.*, 1909–10, XIX, 212; *Mineral Ind.*, 1910, XIX, 210.

cast-iron plates 10 by 2.5 by 0.5 in. The discharge end of one launder is placed inside of the feed end of the next following. From the last launder the liquor drops through a chute onto a bed of pig iron, as impact of liquor greatly assists precipitation of copper, and then passes through settling tanks. The iron plates are swept daily; the cement copper is removed fortnightly from the first 40 or 50 launders, in which most of the copper is precipitated, and every three or four weeks from the others; the copper is passed through sieves on its way to collecting tanks, settled, and dried; it assays about 57 per cent Cu. The iron consumption, 2.5 Fe : 1 Cu., varies with the amount of $Fe_2(SO_4)_3$ present. It has been noted that the presence of much $FeSO_4$ is unfavorable to precipitation; when it exceeds a certain percentage, no Cu is precipitated, but $Fe_2O_3 \cdot xFe_2(SO_4)_3$ separates. The presence of $Fe_2(SO_4)_3$ favors the precipitation of copper.

2. *Butte, Mont.*—The recovery of copper from the mine waters of Butte began in 1888, was put on a business basis in 1901, and has increased to such an extent that the monthly production has reached 275 tons (1913). The waters, having a temperature of 25 to 30° C., contain from 0.0075 to 0.1150, average 0.0500 per cent Cu, and from 0.001 to 0.0008 per cent free SO_3. Two kinds of apparatus are in use for precipitation, forming the so-called flume and the tower systems; a combination of the two is also in operation.

The flumes are boxes of 1 to 1.5-in. boards, 3 to 4 ft. wide, 12 to 14 in. deep, and 800 to 2,000 ft. long, having a fall ranging from 1.3 to 3.75 per cent; the grade toward the end of a system is greater than at the beginning, as the smaller the amount of Cu the water contains the more ready is the attack of the iron; the velocity of the water is 50 to 70 ft. per minute with a depth of 6 to 12 in.; two or three rows of flumes are often placed side by side. Scrap iron and tin cans are used as precipitants. Scrap iron, such as rails, pipes, bars, is placed lengthwise on the bottom near the inflow, short transverse pieces separating the layers; small scrap is distributed lower down in the flume, as are tin cans; these have to be freed from paper and grease (burned off); 1,000 ft. of flume hold about 75 tons of iron and require daily about 1,000 lb. fresh iron; 1.1 to 2.0 lb. Fe are consumed per 1 lb. Cu; the Cu is swept off the Fe every 2 hr. during the day; it collects in communicating settling tanks; a clean-up is made every two to six weeks, when the larger pieces of remaining iron are shaken and scraped, smaller ones raked over. The liquor from the settling tanks is drained; the precipitate is shoveled out, air-dried to 8 to 15 per cent H_2O, and shipped; it contains Cu 60 to 70 and Fe 8 per cent. An analysis given by Febles[1] shows H_2O 12.2, Cu 70.9, SiO_2 2.3, FeO 8.4, Al_2O_3 2.9, CaO 0.3, S 0.8, As 0.27. The ratio As : Cu in the water from the Leonard mine is 1:189; that in cement copper 1:509, showing that only part of the As is precipitated. The recovery of Cu is from 90 to 98 per cent.

Flumes are convenient for charging and manipulating; it is generally held that the precipitation with them is more effective than with towers.

Towers are heavy wooden frames, 40 to 70 ft. long, 15 to 30 ft. high, 6 to 10 ft. wide, with wooden stringers, 2 by 4 in., placed lengthwise; 3 in. apart, to form

[1] *Loc. cit.*

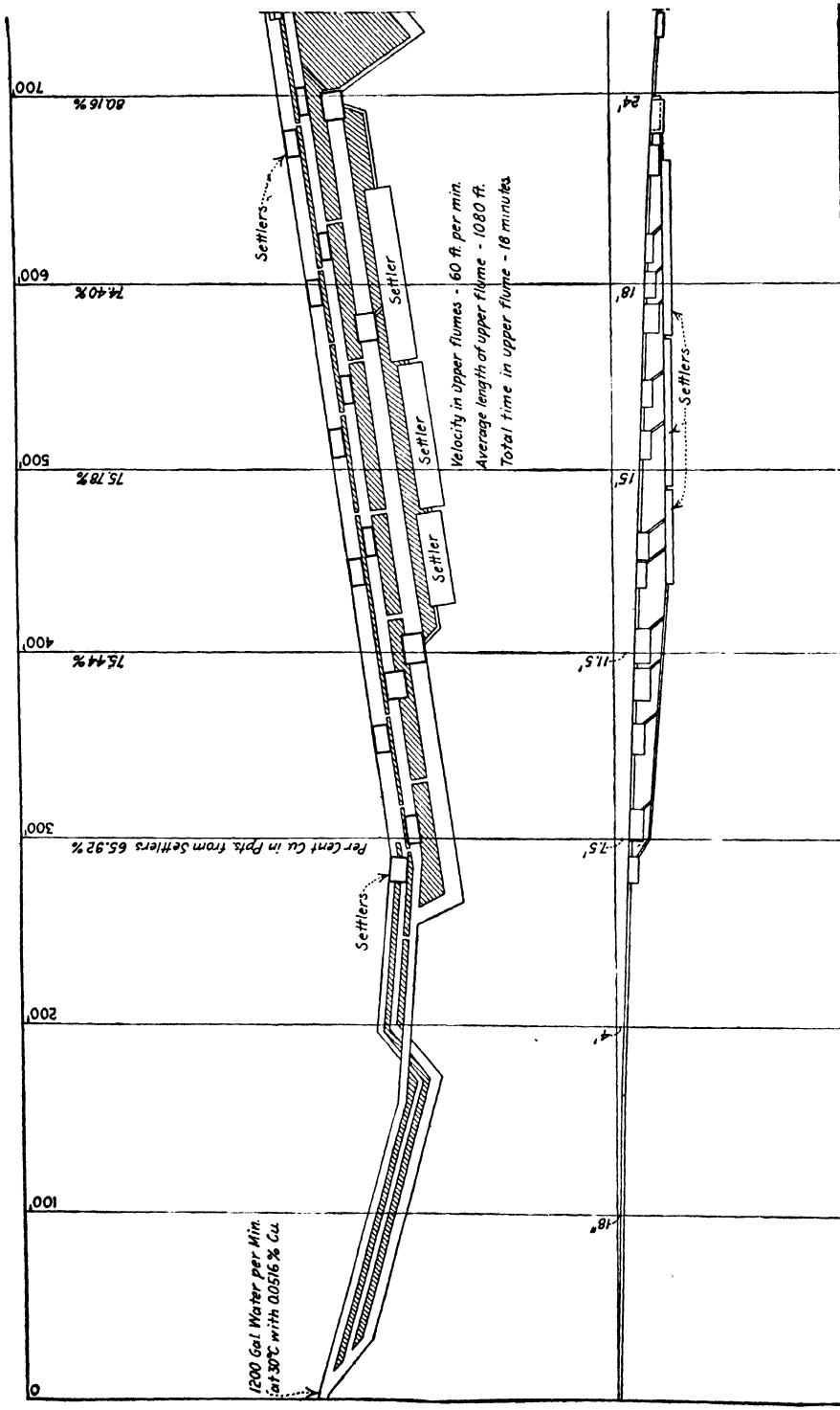
0
100'
200'
300'
400'
500'
600'
700'
1200 Gal Water per Min.
at 30°C with 0.0516 % Cu
Settlers
Per Cent Cu in Pits from Settlers 65.92 %
75.44 %
75.78 %
74.40 %
80.16 %
Settler
Settler
Settler
Settlers
Velocity in upper flumes - 60 ft. per min.
Average length of upper flume - 1080 ft.
Total time in upper flume - 18 minutes
18"
4'
7.5'
11.5'
15'
18'
24'
Settlers

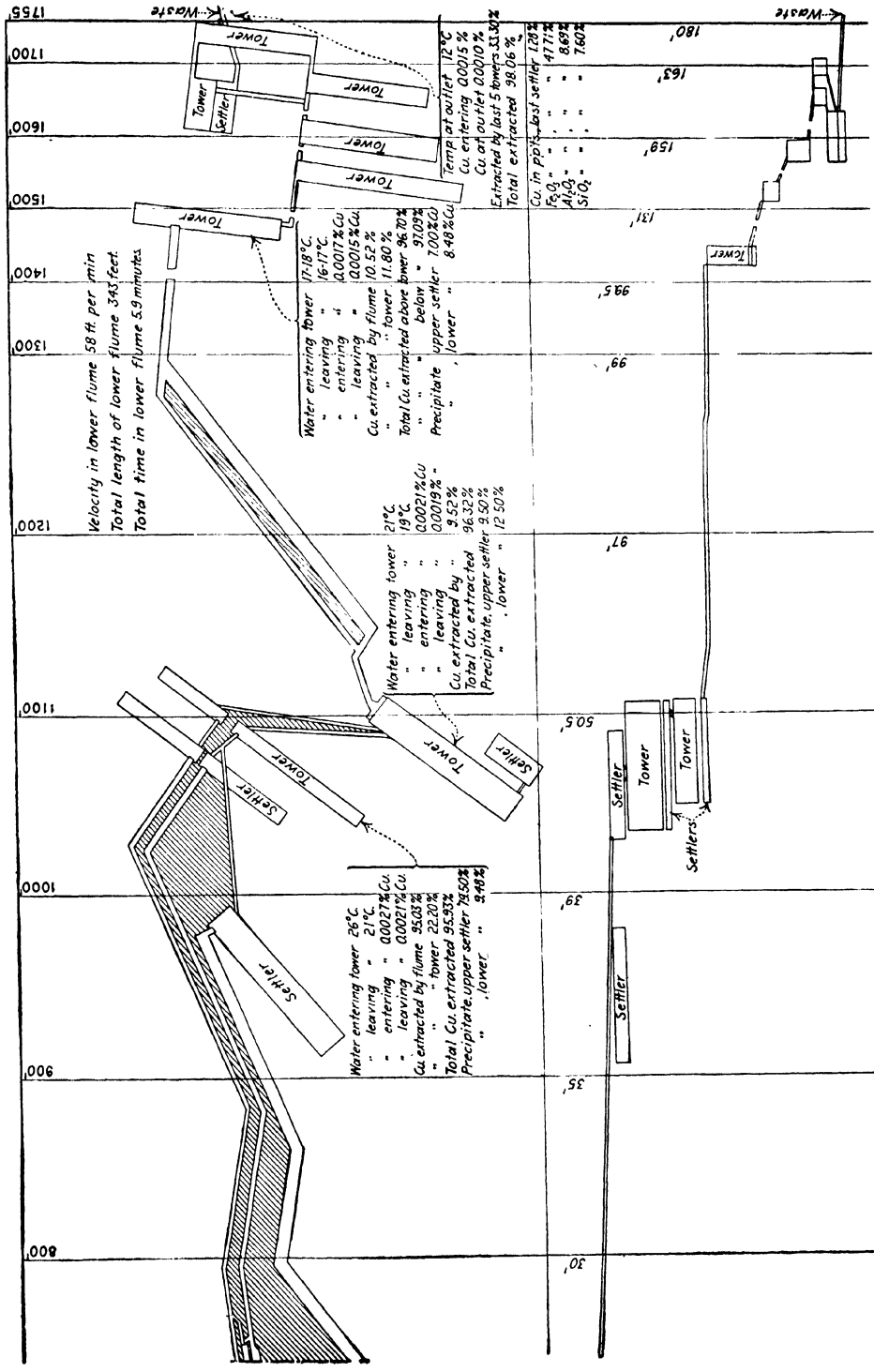
Waste
Tower
Settler
Velocity in lower flume 58 ft. per min
Total length of lower flume 343 feet.
Total time in lower flume 5.9 minutes
Water entering tower 17-18°C.
" leaving " 16-17°C.
" entering " 0.0017% Cu
" leaving " 0.0015% Cu.
Cu. extracted by flume 10.52 %
" " " tower 11.80 %
Total Cu. extracted above tower 96.70%
" " " below " 97.07%
Precipitate upper settler 7.00% Cu.
" " lower " 8.48% Cu.
Temp. at outlet 12°C
Cu. entering 0.0015 %
Cu. at outlet 0.0010 %
Extracted by last 5 towers 33.30%
Total extracted 98.06 %
Cu. in ppts. last settler 12.0%
Fe2O3 " " " 47.71%
Al2O3 " " " 8.69%
SiO2 " " " 7.60%
Water entering tower 21°C.
" leaving " 19°C.
" entering " 0.0021% Cu
" leaving " 0.0019% "
Cu. extracted by " 9.52%
Total Cu. extracted 96.32%
Precipitate. upper settler 9.50%
" " lower " 12.50%
Water entering tower 26°C.
" leaving " 21°C.
" entering " 0.0027% Cu.
" leaving " 0.0021% Cu.
Cu. extracted by flume 95.03%
" " " tower 22.20%
Total Cu. extracted 95.93%
Precipitate. upper settler 13.50%
" " lower " 9.48%
Settlers
1755
1700
1600
1500
1400
1300
1200
1100
1000
900
800
180'
163'
159'
131'
99.5'
66'
97'
50.5'
39'
35'
30'

floors, 18 in. distant from one another which carry the precipitating iron. Baffle boards are nailed to the sides and ends to prevent the falling water from splashing. In some instances the stringers are omitted, and the tower is charged with scrap that is too large for the flumes. A distributing flume delivers the mine water over the top of the tower. Beneath the towers are communicating settling tanks which can be disconnected for cleaning. The mine water is raised by bronze (85 Cu., 15 Sn) centrifugal pumps to the top of a tower and distributed. It falls evenly over the iron, which is kept more or less clean by the fall of the water, but requires beating or scraping to dislodge the copper.

The clean-up is similar to that of the flumes. The copper precipitate and the decopperized water contain mixtures of ferric hydrate and basic ferric sulphate, going under the general name of "ochre,"[1] which shows upon analysis, SiO_2 3.11, CuO trace, Al_2O_3 1.71, Fe_2O_3 66.72, ZnO trace, Mn_2O_3 none, CaO none, MgO none, SO_3 11.51, H_2O 16.95 (calculated for limonite). The rational analysis would give SiO_2 3.11, Al_2O_3 1.71, $2Fe_2O_3 \cdot 3H_2O$ (limonite) 59.95, $Fe_2(SO_4)_3 \cdot Fe_2O_3 + 8H_2O$ 35.23 (basic ferric sulphate).

Figures 222 to 223 give a plan and section of the High-Ore precipitating plant,[2] which treats per minute about 1,200 gal. water of 30° C. containing about 0.0500 per cent Cu. The water enters three flumes, 4 ft. wide by 2 ft. deep with a 2 per cent grade, and travels to the first settlers 300 ft. distant. The flumes are charged with rails, pipes, rods, and bars, which are frequently turned over to separate the cement copper and leave a clean precipitating surface. Every few days, one flume is cut out for cleaning, the iron is removed, and the precipitate washed into the settler. After the first settling tank, the flumes are widened to 6 and 8 ft., and the grade is increased to 2½ per cent. The settling tanks are spaced 75 ft. apart, for the next 500 ft. These 800 ft. of flume form the first unit; in it the flow of water is about 60 ft. per minute.

The settling tanks are wooden boxes, 15 ft. long by 8 ft. deep, built into the flume. When about filled with precipitate, this is sluiced through troughs into three connecting settlers for collection; the clear water is siphoned off, and the cement copper air-dried.

From the first unit the water enters the first tower, 129 by 8 ft. and 19 ft. high, with attached settler and charged with large scrap not suited for the flume; then a second tower, 129 by 8 ft. and 19 ft. high. It travels thence in 6 min. through a double flume, 300 ft. long with a 1.3 per cent grade and charged with tin cans and small scrap, drops through a tower, 81 by 11 ft. and 25 ft. high, and four smaller ones, 8 to 9 ft. high. From the last tower the water enters a settler, 27 by 28 ft. and 4 ft. deep, and then goes to waste. Table LXXVI gives analyses of the head and tail water of the High-Ore mine; Table LXXVII furnishes the leading facts of the three mine-water precipitating plants of Butte.

[1] *Loc. cit.*

[2] FEBLES, *loc. cit.*

TABLE LXXVI.—ANALYSES OF HEAD AND TAIL WATER HIGH-ORE PRECIPITATING PLANT, BUTTE, MONT.

	SiO_2	CuO	Al_2O_3	Fe_2O_3	FeO	MnO	ZnO	CaO	MgO	SO_3	Cl	Total, per cent
Head water...	0.0504	0.6683	0.2102	0.5931	0.2194	0.0714	0.6969	0.3224	0.1200	3.5246	0.0724	6.5491
Tail water....	0.0384	0.0125	0.1926	0.0729	1.0427	0.0574	0.4679	0.3296	0.1376	2.7614	0.0862	5.1959

TABLE LXXVII.—WORKINGS OF THREE MINE WATER PRECIPITATING PLANTS, BUTTE, MONT.

	High-Ore plant	Leonard plant	Silver-Bow plant
Total length of flumes (excluding towers), feet....	1,769	1,943	805
Total fall, feet.....	180	87	56
Average fall per 100 ft., feet.....	10.25	5.6	7
Total height of towers, feet.....	100	38	20
Total length of towers, feet.....	630	224	25
Average width of towers, feet.....	11.45	12.7	7
Total area of towers, square feet.....	7,213.5	2,315.0	175.0
Average width of flumes, feet.....	12.5	5.7	4.9
Total area of flumes, square feet.....	22,169	13,400	3,908
Average temperature of water entering, ° C.....	29	36	24
Average temperature of water leaving, ° C.....	12	11	17
Average flow of water, gallons per minute.....	1,200	1,500	356
Average velocity in flumes, feet per minute.....	70.8	61	50.25
Total time of contact, minutes.....	26.5	29	16
Average copper content entering, per cent.....	0.0516	0.0482	0.0748
Average copper content leaving, per cent.....	0.0010	0.0020	0.0082
Copper extracted, per cent.....	98.6	95.85	90.37
Total length of settlers, feet.....	938	1,150	128
Average width of settlers, feet.....	11.31	7.65	9.3
Total area of settlers, square feet.....	10,613	7,781	1,188
Total precipitating area, square feet.....	29,382	15,725	4,300

The cost at the Leonard plant per pound Cu produced is: labor, $0.0352; supplies and iron, $0.0140; sundries, $0.0002; total, $0.0494 (1913).

179. Mill Tailings and Mine Dumps.—This method is closely allied to heap leaching, considered in §189. Under this head only three examples of highly weathered material will be discussed.

1. *Butte, Mont.*—The mill tailings of the Montana Ore-Purchasing Co., about 1 per cent Cu, after becoming sufficiently weathered were leached to recover part of the copper. They covered about 10 acres and rested upon slime which reduced the seepage to about 20 per cent. The surface was divided into two sections; in each were excavated basins arranged in terraces. Tunnels, 800 to 1,200 ft. long, were driven 200 ft. apart on the bed of slime; they were 5 ft. high, 3 ft. wide at bottom, and 2 ft. at top, and were well timbered. Acid mine water, freed from 95 per cent of its Cu and carrying per liter SiO_2 0.0992, Cu 0.0025, Al_2O_3 0.1241, Fe_2O_3 0.1541, FeO 1.5082, MnO 0.0502, ZnO 0.4257, CaO 0.3936, MgO 0.2172, SO_3 3.5400, Cl 0.0234 g., was delivered by bronze centrifugal pumps to the basins that it might percolate through the tailings; it collected in the tunnels, ran into a sump, and was

pumped into precipitating launders. The surfaces of the basins were allowed to dry periodically to remove precipitated iron salts and to assist in the oxidation of sulphide mineral.

2. *Wallaroo, Australia.*—Here the tailings with 0.9 per cent Cu were stacked in large heaps, 30 to 60 ft. high, on specially prepared ground covering an area of 20 acres. One part of a heap was irrigated at a time with mine water, carrying 100 gr. $FeSO_4$ per gallon with a trace of free acid, and with sea water, while the moistened other part underwent oxidation. The pipes were of cast-iron lined with wood.

3. *Gumeschevsky, Ural.*—At these works an old dump with Cu 0.75, SiO_2 37, Fe 19.6, Al_2O_3 20, CaO 0.25 per cent is leached in tanks with H_2SO_4; one-third of the ore, in large pieces, is first ground in Chilean mills; the rest goes as a liquid pulp through launders to 10 concrete tanks lined with 1 in. of reinforced concrete. A tank, 184 by 42 by 6.5 ft., holds 200 tons of dry pulp and receives with the necessary water 13.2 tons of H_2SO_4 of 53° Bé. The pulp is agitated for 9 hr. by traveling mechanical stirrers, and allowed to settle; the copper liquor is decanted, and the pulp then agitated with water four times for 4 hr. The Cu is precipitated on cast-iron plates in 20 asphalt-lined concrete tanks, in which the recovery is 95 per cent; the consumption of iron 1.8 to 2 Fe : 1 Cu; the cement copper assays 60 to 75 per cent Cu; the total recovery is 50 per cent of the Cu content in the ore.

180. Leaching Oxide Ore.—Under this head will be considered ores which have been weathered in place, producing oxidized minerals. The leading examples are at the New Cornelia Copper Co., Ajo, Ariz., and the Chile Copper Co., at Chuquicamata, Chile, where leaching is done by sulphuric acid. Also the operations at the Kennecott Copper Co., where the leaching agent is ammonia because of the large amount of carbonates in the ore which would consume acid. The leaching of native copper with ammonia at the Calumet and Hecla mill will also be considered under this head. The use of SO_2 as a leaching agent has been successful at the Bureau of Mines Station at Tucson, Ariz., and at Miami, Ariz.

181. Leaching at the New Cornelia Copper Co., Ajo, Ariz.[1]—The ore treated is the oxidized portion of the New Cornelia deposit, averaging in composition about as shown in Table LXXVIII. The copper mineral exists along cleavage planes, so that crushing below ¼ in. is unnecessary. Only 19 per cent of the crushed ore passes 20 mesh. The leaching tanks are of concrete, lined with lead. They are 88 ft. square and 17 ft. 4 in. deep, with a capacity of 5,000 tons of crushed ore. The leaching bottom is made of 5- by 12-in. timbers, on edge on 16-in. centers overlaid with 2-in. ship-lap planks bored with ⅜-in. holes on 2-in. centers. Under the center of the filter bottom and at right angles to the wooden floor joists there is a distributing launder 5 ft. wide and 2 ft. 9 in. deep set in the floor through which the solution enters and from which it is distributed under the filter bottom. The lead lining on the sides of the tanks is protected from abrasion by a covering of 2-in. planks. The tanks are filled by a moving

[1] CROASDALE, *Trans. A. I. M. E.*, 1914, XLIX, 610; RICKETTS, *Trans. A. I. M. E.*, 1915, LII, 737; MORSE and TOBELMANN, *Trans. A. I. M. E.*, 1916, LV, 830; TOBLEMANN and POTTER, *Trans. A. I. M. E.*, 1919, LX, 22; private communication, 1924.

bridge equipped with a tripper belt. The system used is to start at one side and fill until the ore reaches the top on the edge and takes its natural slope from this point to the bottom. This allows the coarse particles to run down the

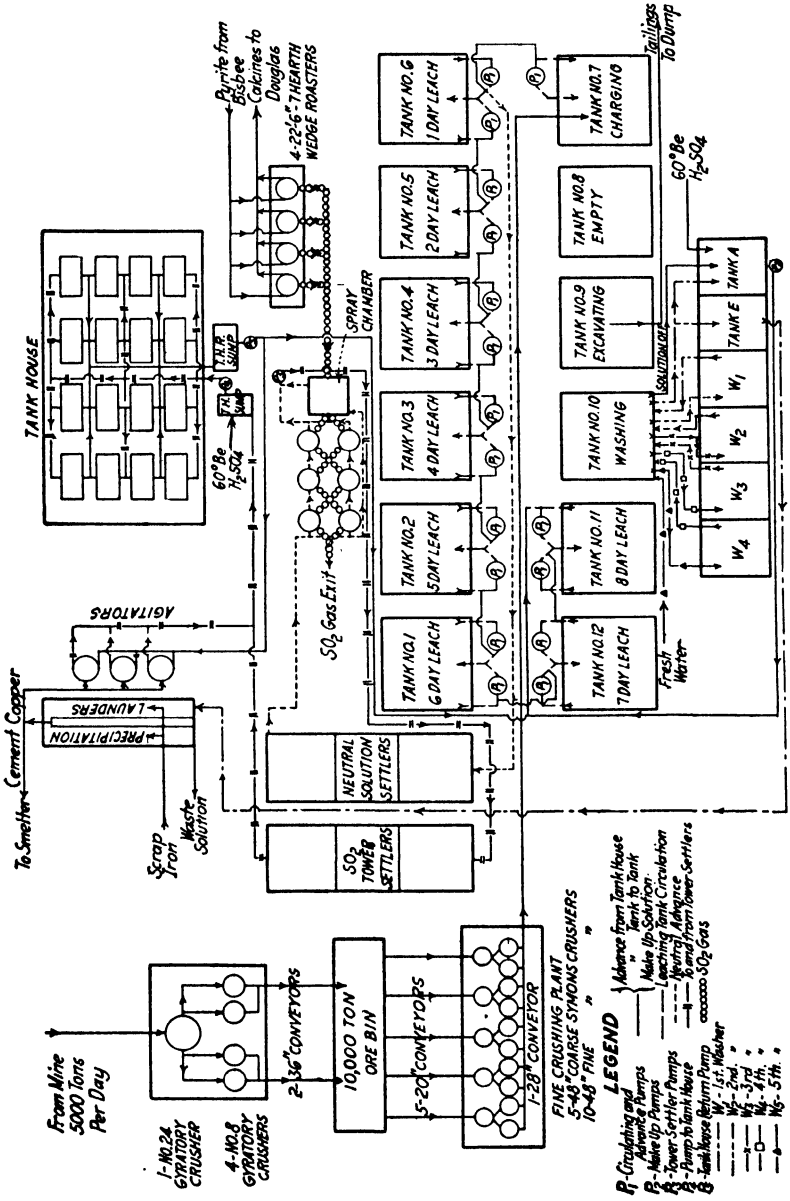

FIG. 224.—Flow sheet of New Cornelia leaching plant.

slope to the bottom, thus aiding in the leaching process. The bridge is now moved forward from time to time, feeding the ore on the upper edge of the slope, continuing until the tank is filled.

The general flow sheet of the plant is shown in Fig. 224. The leaching is wholly by upward circulation and the movement of solutions is accomplished by centrifugal pumps, two to each tank, which are connected in such a way that a portion of the overflowing solution is continually returned up through the tank and a portion advanced to the next tank. The normal circulation is 3,000 to 4,000 gal. per minute recirculated and 1,000 gal. advanced.

There are always seven tanks in process of leaching with one charging and one discharging. After the newly charged tank is filled with solution, the overflow is all recirculated for about 4 hr., at which time it usually comes off fairly clear and the usual portion can be advanced to the reducing towers and tank house. The normal cycle is now as follows: The oldest ore receives return solution from the electrolytic tanks, which passes according to the above-described system through the successive tanks and thence to the reducing towers.

The changes which take place in acid content during this cycle were as follows in 1924:

	Per Cent
Free H_2SO_4 going on the ore the eighth day	2.30
Free H_2SO_4 going on the ore the seventh day	2.14
Free H_2SO_4 going on the ore the sixth day	1.98
Free H_2SO_4 going on the ore the fifth day	1.81
Free H_2SO_4 going on the ore the fourth day	1.61
Free H_2SO_4 going on the ore the third day	1.42
Free H_2SO_4 going on the ore the second day	1.26
Free H_2SO_4 going on the ore the first day	1.10

When a newly filled tank has been put in circuit, the oldest tank is cut out and the solution drained to a storage tank, where it is standardized with acid and used as needed in the circuit while a new tank is being filled with solution. The drained ore is then washed successively with four solutions, one of which has already been used three times, one twice, one once, and one is water. These wash solutions are stored in vats similar to the leaching vats. After being used four times a wash solution is added as needed to the circuit, to make up for losses and discarded solution.

The washed ore is excavated by a Hulett unloader and carried in cars to the dump.

The change in composition of the ore by leaching is shown by Table LXXVIII.

The ferric iron in the solution must be reduced to the ferrous state before the solution is electrolyzed. This is accomplished by means of SO_2 gas produced by roasting sulphide ore in Wedge roasters. The reducing towers are of sheet lead supported by an iron framework and are arranged in a series of three pairs. Two pairs are 40 ft. high and 20 ft. in diameter and one pair is 40 ft. high and 28 ft. in diameter. They are all filled with a lattice work of ⅜-in. boards to provide reducing surface for the solution. The solution from the leaching is pumped to the top of the first pair of towers and, after passing down

TABLE LXXVIII.—ANALYSES OF ORE BEFORE AND AFTER LEACHING, FEB., 1918

	Heads, per cent	Tails, per cent		Heads, per cent	Tails, per cent
SiO_2	67.04	69.28	P_2O_5	0.13	0.110
Fe, total	5.05	4.33	Na_2O	1.73	1.60
Al_2O_3	12.30	11.50	K_2O	3.34	3.31
CaO	0.63	0.60	TiO_2	0.44	0.48
MgO	1.52	1.24	CaO as $CaSO_4$	.....	0.27
Mn	0.025	0.02	Fe as ferrous iron	3.57	2.05
S	0.05	0.26	Fe as ferric iron	1.48	2.28
S (sol. in H_2O)	.....	0.16	H_2O	0.95	0.93
Cu, total	1.57	0.28	Au, ounces per ton	0.014	0.014
Cu (sol. in H_2SO_4)	1.51	.....	Ag, ounces per ton	0.161	0.157
Cu, in laboratory-washed tailings	.....	0.22			

over the boards against the gas current, it is pumped to the second pair of towers, then to the third and to the settling vat. The gas, after leaving the roasters, passes through a Cottrell precipitator, then to a spray chamber, where it is cooled by a spray of leach liquor, the latter incidentally being sufficiently reduced to go directly to the settling tank. The temperature reduction of the gas by this process is from 600 to 150° F. Fans draw the gases through the Cottrell apparatus and precipitator and force it through the third, second, and first set of reducing towers in turn, countercurrent to the solution flow.

The reduction obtained by this treatment is shown in Table LXXIX.

TABLE LXXIX.—CHANGE IN SOLUTIONS DURING REDUCTION BY SO_2 AT AJO

	Ferrous iron, per cent	Ferric iron, per cent	Total reduction, per cent
Solution entering towers	1.01	0.43	
Solution leaving first pair of towers	1.05	0.39	9.3
Solution leaving second pair of towers	1.19	0.25	32.6
Solution leaving third pair of towers	1.42	0.02	53.5
Solution leaving settling tank	1.44	0.00	4.6

The reduction of ferric sulphate causes a corresponding increase in free acid, which amounts to about one-third of the acid required to dissolve the copper content of the ore.

The solution from the settling tanks goes to the electrolytic tank house.

The electrolytic tanks are made of Oregon pine lined with 7 lb. chemical lead. They are 29 ft. 7 in. long, 4 ft. 9 in. wide, and 4 ft. 3 in. deep, arranged in 12 banks of 10 tanks each and 4 banks of 8 tanks each all on one level. Each tank has 84 anodes made of lead with 3 per cent antimony. They are 40 by 51 by ¼ in. and weigh 215 lb. The submerged surface is 41 by 41 in. and they are spaced 4½ in. on centers. The anodes have shown little deterioration.

There are 77 cathodes 42 in. square weighing at the start 15 to 18 lb. and at the finish 130 to 140 lb. The time required to finish a cathode is 14 to 16 days.

The cathodes produced run 99.15 to 99.85 per cent copper. Because of chlorides in the solution, the cathodes run 0.05 to 0.35 per cent Cl. The starting sheets are made by deposition on antimonial lead. The electrodes are arranged parallel to the flow of solution. This is done by placing secondary busbars across the tank connected in such a way with the main busbars at the sides that they are of alternate polarity. The tank is thus divided into seven sections each with 84 anodes and 77 cathodes.

The solution enters the electrolytic tank house, is distributed so as to flow once through a tank, then goes to sumps, one for each bank, from which it is pumped back to the leaching vats. The amount of solution passing each tank per minute is 160 gal. The change in composition taking place during passage through a tank is shown in Table LXXX.

TABLE LXXX.—ANALYSES OF SOLUTION ENTERING AND LEAVING TANK HOUSE

	Solution to tank house neutral advance, per cent	Solution from tank house acid advance, per cent		Solution to tank house neutral advance, per cent	Solution from tank house acid advance, per cent
Cu	2.70	2.42	MnO	0.566	0.566
Fe (ferrous)	1.30	0.97	CaO	0.084	0.084
Fe (ferric)	0.11	0.43	P_2O_5	0.185	0.186
Fe (total)	1.41	1.40	Cl	0.010	0.010
Al_2O_3	1.66	1.66	H_2SO_4, free	2.16	2.33
MgO	0.610	0.610			

A portion of the solution (about 85 gal. per minute) is withdrawn from the circuit to keep down the impurities in the system. This solution is excess wash water from the leaching tanks which is not needed for make-up solution. Its analysis is in per cent Cu 1.78, ferrous iron 0.69, ferric iron 0.39, free H_2SO_4

FIG. 225.—New Cornelia leaching vats.

1.39. The specific gravity is 1.15. This solution is passed through two banks of tanks to lower the copper content and then goes to vats for the precipitation of the remaining copper on scrap iron. About three-fifths of the cement copper thus formed is dissolved by agitation in the tank-house return solution and

introduced into the circuit. The remaining two-fifths containing about 200.000 lb. of copper per month is shipped to the smelter.

The net extraction since the starting of the plant has been about 77 per cent. During the month of Dec., 1923, the extraction of oxide copper was 82.82 per cent, of sulphide copper 23.08 per cent, or a total of 70.67 per cent.

A photograph of part of the plant is shown in Fig. 225.

182. Leaching at the Chile Copper Co., Chuquicamata, Chile.[1]—The principal copper mineral in the ore is brochantite, a basic sulphate easily soluble in H_2SO_4. Associated with this are atacamite ($Cu_2ClH_3O_3$) and chalcanthite ($CuSO_4 \cdot 5H_2O$). There are six leaching tanks 150 by 110 by 19½ ft. deep, each capable of holding 10,000 tons of ore. Solutions are stored in nine tanks at a higher elevation. All tanks are built of concrete and lined with 1 to 1¼ in. of mastic, which consists of one part asphalt and four parts sand. The leaching bottom consists of 6 by 6 timbers placed 10 in. apart on the floor of the tank with 2 by 6 planks 3 in. apart placed crosswise above these. Above this is cocoa matting protected by another layer of 2 by 6 planks ½ in. apart. When the tank is first charged with ore, a 1-ft. layer of cocoa matting is spread over the bottom and allowed to remain. Drainage is effected by eight 6-in. lead-lined iron pipes leading to a 15-in. pipe line. The screen analysis of the ore treated is given in Table LXXXI.

TABLE LXXXI.—SCREEN ANALYSIS OF LEACHING ORE AT CHUQUICAMATA

	In.	Per Cent
On	0.371	12.6
On	0.093	56.5
On	0.0058	8.1
On	0.0041	17.3
On	0.0029	1.8
Through	0.0029	3.7

The cycle of operations is as follows:

1. Fill tank of fresh ore from bottom with about 3,200 cu. m. solution B (Cu, 25 g. per liter; H_2SO_4 45 g. per liter), which has been built up from wash water by successive leaching. Allow to stand 4 to 8 hr.

2. Start to draw off the above solution and follow it from the top with about 600 cu m. D solution (see (4) below). The solution withdrawn, designated as A solution (Cu, 55 g.p.l.; H_2SO_4, 20 g.p.l.), goes to dechloridizing and electrodeposition.

3. Add from the top about 3,200 cu. m. C solution (Cu, 13 g.p.l.; H_2SO_4, 80 g.p.l.), which is spent electrolyte from the tank house. This remains on the ore 36 hr. and is withdrawn as B solution.

4. Add from the top about 2,600 cu. m. of D solution (Cu, 15 g.p.l.; H_2SO_4, 28 g.p.l.), followed successively by 3,200 cu. m. wash solution E (Cu, 8 g.p.l.; H_2SO_4, 12 g.p.l), 2,500 cu. m. of F solution (Cu 4 g.p.l.; H_2SO_4, 5 g.p.l.), and 1,400 cu. m. of water. The first 3,200 cu. m. withdrawn in this treatment

[1] A. W. ALLEN, *Mining Sci. Press*, 1921, CXXII, 835; ROSE, C. A., *Eng. Mining J.*. 1916, CI, 321; *Mineral Ind.*, 1916, XXV, 261.

becomes the new D solution, the next 3,200 cu. m. the new E solution, and the next 2,500 cu. m. the new F solution.

The washed residue is drained 12 to 24 hr. and then excavated by grab buckets.

A complete leaching cycle is about 4 to 5 days. The sulphates in the ore would cause a building up in free acid if no solutions were discarded. During 1920 an average of 2.64 lb. of new acid per ton of ore was used and a net extraction of 89.4 per cent of the copper obtained.

The rich solution A from the leaching vats is dechloridized by agitating with cement copper, causing the precipitation of cuprous chloride, which is settled out, dissolved in ferrous chloride, and the resulting solution passed over scrap iron in cylindrical mills. This produces cement copper and ferrous chloride, which is available for dissolving more cuprous chloride.

The dechloridized solution goes to the tank house where it is electrolyzed, using copper starting sheets for cathodes and copper silicide for anodes. The chlorides and nitrates which are present in small quantities in the electrolyte presented a serious problem in choice of anodes. Lead and lead-antimony alloys were badly corroded and for a time magnetite was used, constructed in the form of hollow prisms for strength. These were produced in Germany and the first cost, which was high, was augmented by heavy breakage in handling. Local production of magnetite electrodes was only partly successful. Following this came a period when high-silicon cast iron was used. This was reasonably satisfactory, but there was a heavy breakage loss, and current efficiency was not as high as desired. After long and expensive research, the present copper silicide anodes were developed, which, although rather brittle, are proving highly successful otherwise.

183. Leaching at the Utah Copper Co., Garfield, Utah.[1]—These operations for leaching the oxidized cap above the sulphide ore were successful until the period of depression following the Great War, but the plant is not at present (1924) in operation. The leaching was conducted in concrete vats 100 ft. long, 50 ft. wide, and 17½ ft. deep, lined with mastic. There are twelve vats, one of which is being filled, one being emptied, and the remainder in various stages of leaching. Water which has been used for washing spent ore is moved forward in the cycle with addition of acid as needed, so that the solution will emerge from the newest ore containing not over 0.2 per cent free H_2SO_4. From here it flows through tanks for precipitation on scrap iron.

184. Stadtberge Process. *Leaching with HCl.*[2]—With the change of the ore from oxide to sulphide, the process has been replaced at Stadtberge by the Doetsch process (§206).

Oxide ore with about 2 per cent Cu, crushed to 1 in., used to be leached for 3 days with HCl of 12 to 13° Bé. in vats holding 75 tons (depth of charge 3.3 ft.) until the acid was neutralized and thereby enriched to 19 to 20° Bé. From the

[1] RICKARD, *Mining Sci. Press*, 1918, CXVII, 787.

[2] MISZKE, *Oesterr. Z. Berg. Hüttenw.*, 1871, XIX, 108; GERHARDT, *Z. Ver. deut. Ing.*, 1872, XVI, 305; FRANCKE, *Metallurgie*, 1910, VII, 484; MENGLER, *op. cit.*, 1911, VIII, 176.

liquor, the Ag with part of the Cu was precipitated with Fe, and, later, on the remainder of the Cu. The leached ore, moist with HCl, was piled in heaps and allowed to weather for 12 to 15 weeks; decomposition was assisted by wetting at intervals with mother liquor from the precipitating vats. In this way 75 per cent of the Cu was recovered. The twice-leached ore was removed to the dump to undergo further alteration by weathering. The drainage from the dump was collected and treated with Fe. An additional 17 or 18 per cent Cu was thus recovered, making the entire yield of Cu 92 to 93 per cent.

Other examples of leaching with HCl are that of Rochlitz,[1] and the tests of Stahl.[2]

185. The Greenawalt Chloride Process.[3]—Oxide or roasted sulphide copper ore is leached with HCl dissolved in brine; the $CuCl_2$ formed is reduced to Cu_2Cl_2 by SO_2 gas, *viz.*, $2CuCl_2 + SO_2 + 2H_2O = Cu_2Cl_2 + 2HCl + H_2SO_4$, and some HCl formed by $H_2SO_4 + 2NaCl = 2HCl + Na_2SO_4$; the solution of Cu_2Cl_2 in HCl and NaCl is electrolyzed with Acheson graphite electrodes and at the same time SO_2 pumped into the vat, whereby the Cl set free is converted into HCl, the reactions being $Cu_2Cl_2 + \text{current} = Cu_2 + Cl_2$ and $Cl_2 + SO_2 + 2H_2O = 2HCl + H_2SO_4$, also $H_2SO_4 + 2NaCl = 2HCl + Na_2SO_4$. It is thus seen that the raw materials consumed are salt ($1\frac{1}{8}$ lb. NaCl for 1 lb. Cu), and SO_2. Impurities, such as Bi, As, and Sb, are to be precipitated by H_2S from decopperized liquor. Iron going into solution as $FeCl_2$ is precipitated as Fe_2O_3 by CuO, according to the Hunt-Douglas reaction $FeCl_2 + 3CuO = Fe_2O_3 + CuCl_2 + Cu_2Cl_2$. For a complete elimination of base metal, NaCl is electrolyzed, giving Cl and NaOH (2 kw.-hr. furnishing 1 lb. Cl and 1.5 lb. NaOH), the Cl is conducted with SO_2 into brine: $2Cl + SO_2 + 2H_2O + 2NaCl = 4HCl + Na_2SO_4$, and the NaOH serves to precipitate the base metals. Accumulation of Na_2SO_4 is said to have no bad effect.

186. The Greenawalt Sulphuric Process.[4]—W. E. Greenawalt has developed a process whereby sulphuric acid leaching may be applied to ores or roasted concentrates and the copper extracted by electrolytic methods, even when the solutions are high in iron. The essential difference between his process and other sulphuric aid processes is his method for reducing the ferric iron and keeping it reduced. His reducer is shown in Fig. 226. The motor-driven discs rotating at 800 to 1,000 r.p.m. throw the electrolyte as a spray into the SO_2 atmosphere, which reduces the iron. The SO_2 reduction may be supplemented by H_2S which will operate in solutions too acid for successful reduction by SO_2. H_2S is used to strip solutions which are to be discarded. The freshly precipitated Cu_2S thus obtained is added to circulating electrolyte, which takes up the Cu, and the resulting reaction reduces ferric sulphate very effectively. H_2S may be generated by treating matte with waste acid. Figure 226*a* shows the

[1] MEYER, *Berg. Hüttenm. Z.*, 1862, XXI, 173, 201.

[2] *Op. cit.*, 1894, LIII, 65.

[3] GREENAWALT, *Eng. Mining J.*, 1910, XC, 1064; AUSTIN, *Mining Meth.*, 1911, II, 339; GREENAWALT, "Hydrometallurgy of Copper," 1912, p. 349.

[4] *Mining Met.*, 1924, V, 93; Feb., 1924, *Meeting A. I. M. E.*

arrangement of a typical plant. In operating, a solution containing about 4.0 per cent Cu, 0.5 per cent acid and 1.5 to 3.5 Fe is received from the leaching plant. This circulates in the first unit in closed cycle between reducer No. 1 and the electrolytic cells. The flow is adjusted so that the electrolyte, on leaving the last cell of the first unit, contains about 3 per cent Cu and 3.25 per cent acid. A portion of this solution is continuously diverted to the second section, where the overflow of the last cell contains about 2.25 per cent Cu and 5.31 per cent acid. Similarly, the solution from the third unit contains about 1.75 per cent Cu and 6.69 per cent acid and from the fourth unit 1.25 per cent Cu and 8.0 per cent acid. The reduction in the fourth unit is accomplished by Cu_2S with possibly some SO_2. The solution leaving the fourth unit is in part returned to the ore leaching and in part diverted for H_2S precipitation and

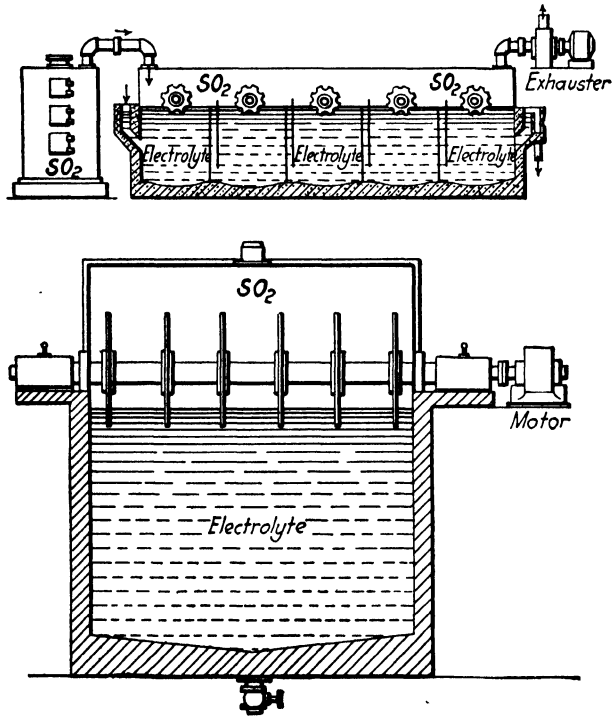

FIG. 226.—Greenawalt reducer.

discard. If desired, some of the copper may be removed in stripper cells before giving a final treatment with H_2S.

187. Leaching with Ammonia.—There are difficulties encountered in ammonia leaching which have prevented its adoption where other methods are practicable, but two classes of ore are particularly adapted to this treatment. Carbonate ores too low in copper for direct smelting cannot be easily concentrated and consume so much acid that treatment by the common leaching processes is impossible. Native copper tailings, where the copper is finely

disseminated through the gangue and escapes all practical concentration treatments, is not readily soluble in acid. Both of these materials yield readily to ammonia leaching and two successful plants are in operation using this process.

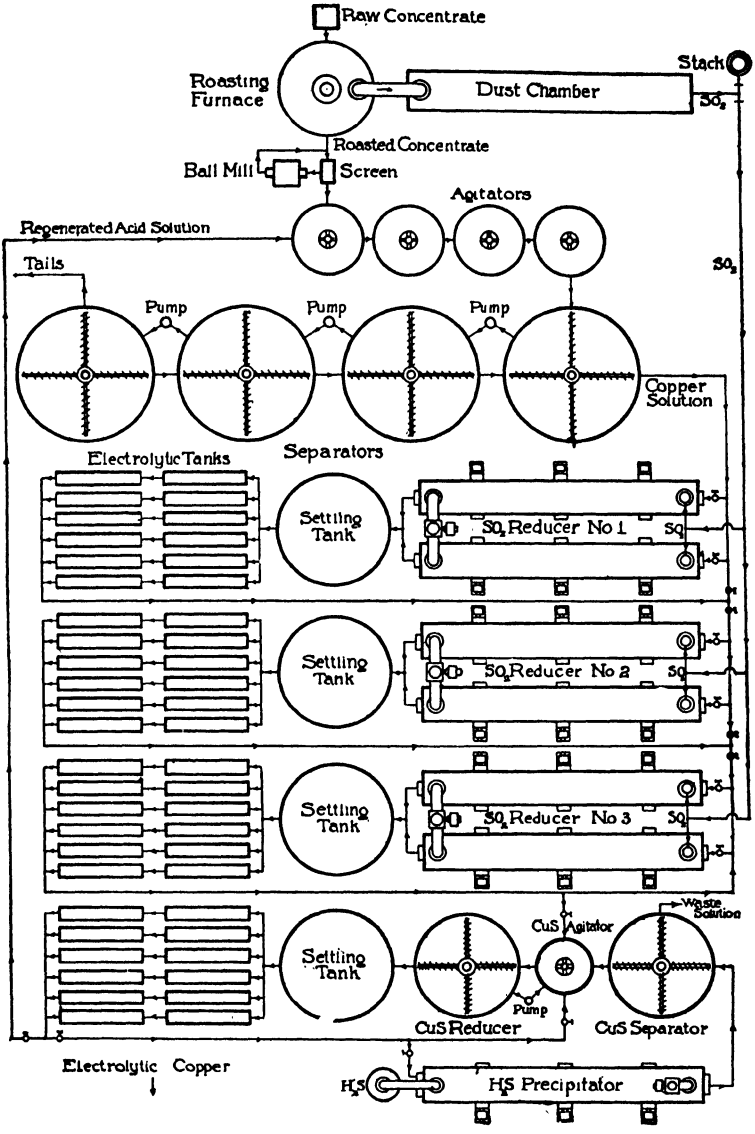

FIG. 226a.—Arrangement of Greenawalt plant.

One is at the Kennecott Copper Co., Latouche, Alaska,[1] where a material carrying 0.9 per cent carbonate copper is being treated. The other is at the Calumet and Hecla Co., Lake Linden, Mich.,[2] where tailing from concentrating

[1] LAWRENCE, *Eng. Mining J.*, 1917, CIV, 781; EDDY, *Chem. Met. Eng.*, 1919, XX, 328.

[2] BENEDICT, *Eng. Mining J.*, 1917, CIV, 43; BENEDICT AND KENNY, *New York Meeting, A. I. M. E.*, Feb., 1924.

native copper ore is being treated. The copper content of these tailings runs at present about 0.45 per cent Cu.

The fundamental principles of both the above processes are the same. The solution consists of cupric ammonium carbonate and excess ammonium carbonate in water, which readily dissolves carbonate copper and metallic copper. The copper is recovered from solution by distilling off the ammonia, which is recovered, leaving a precipitate of copper carbonate and black copper oxide. Continued boiling changes the carbonate to oxide. This precipitate is shipped to a smelter.

The procedure at the Kennecott plant may be summarized as follows:

1. Mill tailing, 80 per cent on 2 mm. containing 0.4 per cent sulphide copper and 0.9 per cent carbonate copper is charged into round steel filter-bottom tanks 30 ft. in diameter and 20 to 25 ft. high. The tanks have close-fitting dome-shaped covers with riveted joints.

2. Add copper-ammonia solution assaying 3.5 to 4 per cent Cu and 7 to 8 per cent NH_3. Allow to stand for 12 hr.

3. Remove a portion of the leach solution for treatment in the evaporators and replace it with concentrated liquor and weak copper-ammonia solution. The concentrated liquor assays 15 per cent NH_3 with 80 per cent of the ammonia in this liquor saturated with CO_2. The weak copper-ammonia solution assays about 2 per cent Cu and 4 per cent NH_3. Assay of solution removed for treatment in evaporators 4.5 to 5 per cent Cu and 7 to 8 per cent NH_3.

4. Circulate the solution through the ore for 30 hr.

5. Remove solution and wash with 30 tons of weak solution (0.3 per cent Cu and 1.0 per cent NH_3).

6. Finish washing by introducing steam at top of tank for about 22 hr. Washing stopped when NH_3 content of effluent falls to 0.45 per cent.

7. Tailings are excavated from tank by scraper blades on arms revolving about central shaft which force the material to doors placed over a conveyor belt.

8. Boil strong solutions (5 per cent Cu and 7.5 NH_3) in special evaporators. The NH_3 is driven off and recovered in absorbing towers. The CO_2 is also driven off. Part, equivalent to that as carbonate in the ore, is vented to the atmosphere, while the remainder is passed to the ammonia solution and recovered. The copper is precipitated.

The temperature in the evaporators reaches a maximum of 270° F.

9. Dry the precipitate, sack, and ship to smelter.

The following data represent practice in 1922:[1]

Heads, per cent carbonate Cu	0.90
Tails, per cent carbonate Cu	0.22
Extraction, per cent carbonate Cu	76.4
Total NH_3 loss, pounds per ton ore leached	0.68

[1] Private communication.

	Pounds per Ton Ore	Pounds per Pound Copper Recovered
Steam consumption		
Evaporation	218	16.0
Washing	126	9.2
Total	244	25.2

For every 100 tons of ore leached, 13.8 tons of solution were evaporated.

At the Calumet and Hecla plant only one strength of solution is used. This averages 3 per cent Cu, 6 per cent NH_3, and 4 per cent CO_2. The Cu is regulated by withdrawals for precipitation, and losses of NH_3 and CO_2 are made up by additions from stock supplies.

It is essential with native copper to have the solution oxidized to the cupric state. This is done by passing it down through the scrubber towers against a current of air. Any ammonia removed in this operation is recovered in an absorption tower.

The character of the sands at the Calumet and Hecla plant (about 30 per cent through 100 mesh) causes difficulties in washing by steam under pressure. It has been found more satisfactory to draw the steam through by attaching suction below the tanks.

In 1923 the plant treated 1,664,130 tons of ore and produced 7,454,000 lb. Cu, attaining an extraction of 79.7 per cent. The product shipped carried 82.55 per cent Cu.

188. Leaching Sulphide Ore after Conversion into Sulphate by Weathering. Pyritic ore which is readily disintegrated by atmospheric agencies, such as free-burning pyrite and especially marcasite, and which carries disseminated copper mineral readily sulphatized, such as chalcocite, is suited for weathering; covellite is slowly sulphatized, and chalcopyrite hardly at all, unless it is first converted into chalcocite, which is a very slow process. But even under the most favorable conditions the process is lengthy, requiring years for a satisfactory extraction. The pyritic material, while disintegrated in the process, is only slightly altered and can be utilized for the production of SO_2 in the manufacture of H_2SO_4.

The leading chemical reactions taking place in weathering have been variously formulated.[1] The simplest is that of Jones: $FeS_2 + 7O + H_2O = FeSO_4 + H_2SO_4$; $2FeSO_4 + H_2SO_4 + O = Fe_2(SO_4)_3 + H_2O$; $Fe_2(SO_4)_3 + Cu_2S = 2FeSO_4 + CuSO_4 + CuS$; $Fe_2(SO_4)_3 + CuS + H_2O + 3O = 2FeSO_4 + CuSO_4 + H_2SO_4$. The H_2SO_4 set free would further decompose Cu_2S and CuS. Winchell suggests that, inasmuch as Cu_2S is more readily oxidized than FeS_2, its solution may precede that of FeS_2 and hasten the oxidation of the latter. The sulphatization of CuS_x is accompanied by the conversion of sulphides of Ni, Pb, and Zn into sulphates and the oxidation and solution of As, Sb, and Bi. From the solution Fe will precipitate Cu first and later on part of the As, Sb, and Bi. Table LXXXII gives some data by Gibbs[2] upon the elimination of these three elements.

[1] Emmens, *Eng. Mining J.*, 1892, liv, 582; Probert, *Econ. Geol.*, 1903, lxxvi, 958; Stokes, *op. cit.*, 1907, ii, 14, 290 (Winchell); Jones, *Trans. A. I. M. E.*, 1905, xxxv, 3.

[2] *Trans. A. I. M. E.*, 1903, xxxiii, 667.

TABLE LXXXII.—ELIMINATION OF AS, SB, AND BI BY WEATHERING

Metal	Pyrite		Precipitate		Total elimination, per cent
	Per cent actual	Per cent relative, Cu = 100	Per cent actual	Per cent relative, Cu = 100	
Cu	2.00	100.0	62.0	100.0	
As	0.40	20.0	3.5	5.64	71.8
Sb	0.030	1.5	0.08	0.129	91.4
Bi	0.016	0.8	0.06	0.097	87.0

189. Heap Leaching.[1]—This method for recovering copper from ores was probably first practiced at Rio Tinto in 1752 and is still in successful operation there and at other mines in Spain and Portugal. It has also been successful at the Wallaroo and Moonta mines of South Australia, and has recently been introduced in this country at Bisbee, Ariz.

190. Leaching at Rio Tinto.—The leading example is that of Rio Tinto, Spain,[2] where weathering has superseded all other processes, especially since heap-roasting has been forbidden since 1888. At San Domingo, Portugal, the law went into effect in 1878. The ore is a massive pyrite (marcasite) and an impregnated schist with from 1 to 3, average 2.5 per cent Cu, and 45 to 48 per cent S. The analyses[3] given in Table LXXXIII show the general character of the ores exported and treated locally. Other analyses are published by Vogt.[4]

TABLE LXXXIII.—ORE OF RIO TINTO, SPAIN

Ores	Massive pyrite		Schistose pyrite
	Export ore	Local-treatment ore	Local-treatment ore
Fe	43.1	42.8	0.10
S	49.5	48.3	0.15
Cu	2.5 to 3.0	1.5 to 2.0	1.0 to 1.25
Pb	0.3	1.3	
Zn	0.8	1.8	0.05
As	0.4	0.7	
H_2O	0.5	0.8	3.15
SiO_2	0.6	0.7	93.6
O and various metals	1.2	1.1	
Total	99.4	99.5	98.3

[1] IRVING, *Eng. Mining J.-Press*, 1922, CXIII, 714, 774.

[2] DEUMIÉ, *Bull. Soc. Ind. Min.*, 1887, I, 843; LAUNAY, *Ann. Mines*, 1889, XVI, 491; *Berg. Hüttenm. Z.*, 1890 XLIX, 229 (with cross-references); *Eng. Mining J.*, 1890, L, 741; BROWN, *J. Soc. Chem. Ind.*, 1894, XIII, 472; *Dinglers polytech. J.*, 1894, CCXCIV, 48; *Berg. Hüttenm. Z.*, 1895, LIV, 8; COURTNEY, *Proc. Inst. Civ. Eng.*, 1896, CXXV, 136; ADCOCK, *Mineral Ind.*, 1900, IX, 235; CHALON, *Rev. Un. Min.*, 1902, LVII, 205; JONES, *Trans. A. I. M. E.*, 1905, XXXV, 3; TRUCHOT, *Sixth Internat. Congress Appl. Chem.*, 1906, II, 170; *Bull. Soc. Ind. Min.*, 1908, IX, 68; *Mineral Ind.*, 1906, XV, 288, his treatise, p. 163; PROBERT, *Mining Sci. Press*, 1908, XCVI, 27; Correspondent, *Eng. Mining J.*, 1910, LXXXIX, 748.

[3] *Eng. Mining J.*, 1907, LXXIX, 371.

[4] *Z. prakt. Geol.* 1894, II, 44; *Z. Berg. Hütten. Sal. Wesen. i. Pr.*, 1898, XLVI, 225.

The ore is crushed to pass a 3-in. ring and sorted into coarse and fine in the ratio of 4:5 with 1.25 and 2.25 per cent Cu. The site for a weathering heap is a slightly sloping ground. On this, stone flues are erected, each 12 in. in diameter, to serve as air-inlets and draining channels; on the junctions of the flues are erected, as the heap is being formed, chimneys 80 ft. apart, also of rough stone. The heap is now formed of alternate layers of coarse and fine ore, the start being made with side-dump cars on the upper part of the site. The top layer consists of fines in order to assist in the distribution of water. The heap, which has a horizontal surface, is 33 to 40 ft. high and holds 100,000 tons of ore. On the surface are formed squares separated by ridges to regulate the flow of water admitted through gutters. While the heap is being formed, H_2O is admitted to dissolve existing $CuSO_4$ and to furnish the ore the moisture necessary for oxidation. The temperature in the chimneys may rise to 82 and 90° C. and even to the kindling temperature of the ore; it is, however, not allowed to exceed 82° C.; at some mines it is held at 30 to 32° C., and the average temperature is 45 to 60° C. If the heat rises too quickly in places, the chimneys are closed, which not only checks such rise, but causes the oxidation to spread more evenly through the heap. The combined warmth and oxidation cause hardly perceptible fissures to form in the pyritic ore into which solvents penetrate, dissolve the Cu, and more or less disintegrate the disulphide. When oxidation has proceeded sufficiently, H_2O charged with liquor from the cementation tanks is run on at the rate of 50 cu. m. (13,210 gal.) per hour until the soluble Cu has been extracted. The water is turned off, the heap allowed to drain, and the sulphide mineral to oxidize, whereupon leaching is repeated. After about one year, the surface is dressed, *i.e.*, the locations of the squares and ridges are interchanged, and the gutters correspondingly shifted; further, the edge of the heap, having become hardened by crystallized copper salt, is dug into and formed into terraces in order that the salts may be readily extracted. It takes from six to seven years with massive ore, and from three to four years with schistose ore to reduce the Cu content to 0.25 to 0.30 per cent, which is as far as the extraction can be carried with a profit. There is a loss of 15 to 30 per cent of weight of the ore in the process. The exhausted ore (washed sulphur ore) is removed and shipped to sulphuric acid plants. Upon screening through a 2-mesh sieve to prepare for the coarse- and fine-ore-roasting kilns, as much as 50 per cent will pass through the sieve, showing how strongly it becomes disintegrated by weathering.

The solution with from 0.015 to 0.5 and even 0.6 per cent Cu is of a reddish-green color; it contains $Fe_2(SO_4)_3$, $FeSO_4$, $CuSO_4$, H_2SO_4, besides $Bi_2(SO_4)_3$, $Sb_2(SO_4)_3$, Ag_2SO_4, and $Fe_2(AsO_4)_2$. In order to reduce the Fe-consuming $Fe_2(SO_4)_3$ to $FeSO_4$, the liquor from the heap is run over freshly mined pyrite fines, when the reaction $7Fe_2(SO_4)_3 + FeS_2 + 8H_2O = 15FeSO_4 + 8H_2SO_4$ takes place.

The "filter bed" is laid in a reservoir formed by a masonry dam across a small ravine having a slope of about 5 deg.; its surface is topped with the finest material and divided into 50-ft. squares. The liquor remains in contact with

the filter until its color has changed to a clear blue, when 90 per cent of the $Fe_2(SO_4)_3$ has been reduced to $FeSO_4$. It contains per cubic meter (35.31 cu. ft.) 4 kg. (8.8 lb.) Cu, 1 (2.2 lb.) Fe_2O_3, 20 (44 lb.) FeO, 10 (22 lb.) H_2SO_4 and 0.3 (0.66 lb.) As.

191. Leaching at Bisbee, Ariz.—Experiments in heap leaching were begun by the Phelps Dodge Corporation at Bisbee, Ariz., in 1914 under the direction of Joseph Irving. The raw material is the stripping ore from Sacramento Hill, running about 0.72 per cent copper. The laboratory work proving successful, an experimental 10,000-ton heap was tried on ore containing 1.33 per cent Cu, 10.5 Fe, 60.7 SiO_2, 12.1 Al_2O_3, 9.9 S, which had been weathered for two or three years. At the end of three years the extraction was 72.3 per cent, but only 46 per cent was recovered as cement copper. It was found that the loss was largely due to the penetration of solution into the ground, which can be minimized by placing a bed of mill slimes under the heap. On the basis of the results obtained, a large heap, which may contain 2,000,000 tons of ore, is now being treated. It has been found that run of mine ore is satisfactory if care is taken in building the heaps.

For successful heap leaching, care must be taken to prepare the bed in such a way that the solutions can properly penetrate the heap and be drained away, and air for oxidation readily admitted. This calls for culverts underlying the bed surrounded and overlaid by coarse ore.

The amount of ferric iron in solution must be kept low; otherwise an excessive consumption of precipitating iron is consumed. The control is brought about by regulating the temperature of the heap and the character of the solution applied in leaching, together with care in applying the solution to the heaps. Filtering solution through raw pyrite has been found to be a successful method for reducing ferric iron and clarifying solutions.

192. Precipitation of Copper from Heap-leaching Solutions, General.—Iron is the only precipitant which is generally used for this purpose. The form in which it is used depends on the market conditions. Pig iron gives the finest precipitate, but old cans and general scrap, large and small, are frequently used.

193. Precipitation in Launders at Rio Tinto.—The precipitation (cementation) with pig iron is carried on in a series of flumes placed along the slope of a hill so that the liquor flows to and fro until, after passing through a mile of flume, it is discharged and collected in part to be used again as solvent. Each main flume is made of two, three, or four smaller flumes separated from one another by walls. Each flume is 320 ft. long, 5.5 ft. wide, and 2.25 ft. deep, constructed of 9- by 3-in. planks held together by wooden frames set in cement, the joints of the planks being rope-calked and painted with asphalt. In order to permit cutting out of circuit, each end of a flume is provided with a door with holes, closed by plugs, to drain off the liquor before removing the cement Cu. The fall of the flumes increases from inlet to outlet, *i.e.*, 0.5 per cent for the first third, 1 per cent for the second, and 2 per cent for the last third, in order to diminish the increased Fe consumption by the partly decopperized liquor. The bottom of a flume is loosely covered with boards,

and the pig iron piled in grids at right angles to one another until the flume is filled, 1 ft. of flume holding 1 ton of pig iron. The liquor from the filter bed passes into a reservoir and thence runs into the flumes at the rate of 300 cu. m. (10,595 cu. ft. or 79,260 gal.) per hour. In summer it reaches a temperature of 38° C., the higher the temperature the more rapid the precipitation. The precipitate near the head of the flume is the purest Cu (93 to 94, As < 0.3 per cent) and adheres to the pig iron; lower down it is still red but becomes granular (Cu 75 to 90, As 0.5 per cent); the remainder is more or less black (Cu 50, As 5 per cent) and contains most of the graphite. Some flumes are cleaned daily; the liquor is run into settling tanks to recover suspended Cu, the pig iron is removed and piled on the dividing wall, adhering Cu knocked off, and the iron then returned to the flume. The cement Cu goes to a cleaning and concentrating plant. Here red precipitate (Cu 70 per cent) is screened, washed with a hose, compressed into cylinders, dried, and shipped. Black precipitate is briquetted and sun dried, and so hardens and is ready to go to the blast furnaces. The liquor with Cu 15 to 20 g. per cubic meter goes to waste, as the Fe consumption is too high to pay for the recovery of the Cu. The extraction of Cu reaches 95 per cent. Table LXXXIV gives analyses of in- and outgoing liquors.

TABLE LXXXIV.—HEAD AND TAIL LIQUORS OF RIO TINTO

Liquor	Per cent					Specific gravity
	Cu	FeO	Fe_2O_3	H_2SO_4	Total solids	
Head	0.2715	1.3908	0.0610	0.4874	7.0872	1.05818
Tail	0.0010	1.7202	.....	0.4120	6.0662	1.05718

The consumption of iron under favorable circumstances is 1.3 to 1.5 tons of pig iron (with 92 per cent Fe) for 1 ton of Cu; usually it is nearer 1.75 to 2 tons.

194. Precipitation in Vats.—The use of vats makes a more compact plant and therefore better operating conditions. The principal disadvantage has usually been inefficient contact between solution and iron, due to improper circulating conditions or to lack of agitation which would remove the deposited copper and expose fresh surfaces of iron to the solution. Irving[1] has developed a vat using a modified Dorr stirrer operating below a wooden grid, which is much more efficient than the usual installation. This is shown in Fig. 227. All parts which come in contact with solution are made of wood. The iron is placed by a crane on the false tray until it is level with the top of the vat; the solution enters at the center, goes to the bottom, and then up through the iron, leaving through the overflow launder, whence it goes to other vats or to waste.

Periodically, the mechanism is raised from the bottom and rotated with sufficient speed to agitate the solution and thus wash the precipitated copper from the iron. In a 24-ft. vat this has been found to be about 5 r.p.m. and requires a 4-hp. motor. The precipitate is discharged periodically by the usual Dorr method. The frequency of discharge varies from daily to weekly, depend-

[1] *Eng. Mining J.-Press*, 1923, CXIII, 774; *Mining Sci. Press*, 1921, CXXIII, 533.

ing on the amount of copper in solution. The precipitate is discharged to a Dorr classifier where the coarse portion is separated from the fine or slime, the former being discharged onto drying platforms and the fines going to a Dorr thickener. The overflow from the thickeners is returned to the precipitating vats. The amount of iron consumed per unit of copper has been shown to be much less in the Irving-Dorr apparatus than in launders, due principally to less formation of ferric salts which attack the precipitant and less exposure of the precipitant to the air.

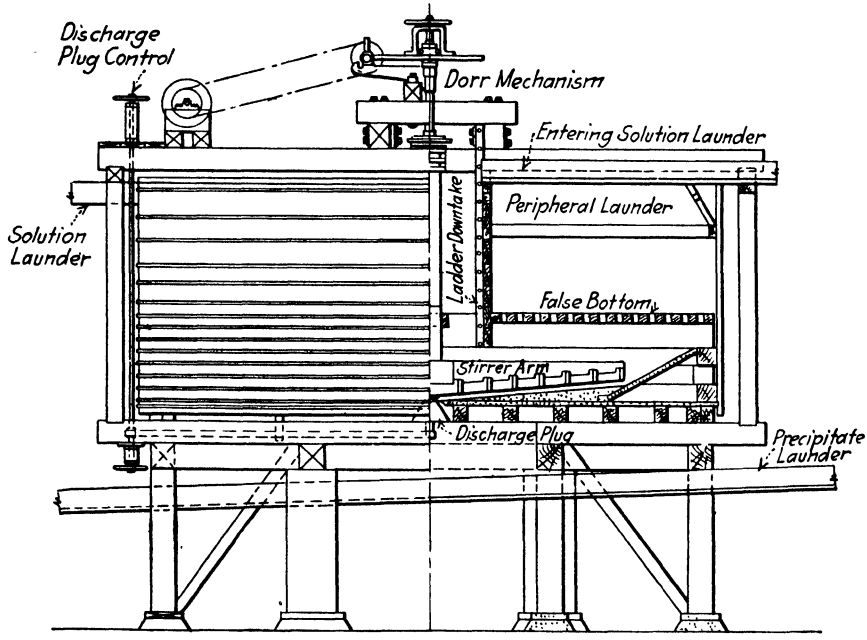

FIG. 227.—Irving precipitating vat.

Table LXXXV shows the results of some tests made with different kinds of iron for precipitation of a solution containing 2.4 per cent Cu, 2.8 $FeSO_4$, 0.3 $Fe_2(SO_4)_3$, 1.6 Al_2O_3.

TABLE LXXXV.—COMPARISON OF FORMS OF IRON IN PRECIPITATING COPPER FROM SULPHATE SOLUTIONS

	Ratio by weight of Fe consumed to Cu precipitated	Precipitate, ratio of coarse to fine	Precipitate, per cent Cu
Pig iron	1.35 : 1	98 : 2	94.4
Wrought iron	1.6 : 1	94 : 6	87.2
Cast iron	1.65 : 1	93.5 : 6	86.8
Steel shavings	2.10 : 1	86.5 : 13	72.7
Cast steel	1.75 : 1	94.1 : 6	80.1
Tin cans	2.35 : 1	81 : 19	66.9

195. Precipitation of Copper with SO_2 Gas.—A process has been patented by Weidlein[1] for the precipitation of copper from sulphate solutions obtained in leaching. The solution is first neutralized with lime and then saturated with SO_2. It is next placed in a pressure tank and heated to 160° C. under a pressure of 100 lb. per square inch. The copper is precipitated in a pure form (99 per cent Cu). Laist has modified the apparatus somewhat to simpify the operations on a large scale.

The advantage of this process is the pure form in which the copper is obtained, which requires only melting and casting into commercial shapes.

In operating commercially only part of the copper is precipitated, but the process may find application as a preliminary step, followed by the use of iron for completing the copper recovery.

196. Leaching Ore in Place.—This has been tried at Schmoellnitz, Hungary, by Buddeus;[2] in England, and at Chase Creek Canyon, Ariz., by Austin.[3] The mines of Schmoellnitz, drowned in 1878, were pumped out in 1904, when the Cu recovered from the mine water paid for the pumping. Durant[4] records the flooding of a mine in England from two to four times a year, recovering first Cu from the water and later iron ochre, after which the water is used again for filling the mine.

At Chase Creek Canyon, Austin experimented with the leaching of disseminated sulphide copper ore in place, by opening the ore body in several horizons 50 ft. apart with drifts and cross-cuts, and introducing water which, filtering through the intervening rock, dissolved the Cu. The solutions were collected in a shaft starting from the lowest level, placed below the natural drainage of the locality, and then pumped into precipitating tanks. It was found that 1 ton of solution contained 0.4 lb. Cu, but there was not enough of it. Adverse conditions necessitated the abandoning of experiments to increase the amount.

At the mine of the Ohio Copper Co., Bingham Canyon, Utah,[5] a large amount of ore had been mined by the caving system in 1919, the richest of which had been removed, but the remainder could not be treated profitably at the market price for copper. Investigation showed that a large proportion of the rock was shattered, leaving the mineral exposed along cleavage planes. The rock of the whole mine ran between 0.3 and 1.3 Cu. The arrangement of the ore body and mine workings was such that water could be introduced at any point on the surface and, after percolating over fractured ore, would emerge in the main haulage tunnel with very little loss from seepage. Furthermore, air for oxidation would rise by natural ventilation of the workings up through the ore body. In other words, the conditions were ideal for leaching in place. In the operations as carried on at present (1923), about 400 gal. of water per minute are pumped 300 ft. from a creek

[1] U. S. Pat. 1089096 (1914); *Met. Chem. Eng.*, 1915, XIII, 652.

[2] *Berg. Hüttenm. Z.*, 1904, LXIII, 13, 41, 73.

[3] *Mines Meth.*, 1911, II, 153, 187; Comments: *Eng. Mining J.*, 1911, XCXI, CHANNING, 601; HENRY, 699; WEBBER, 700; WEBBER, 1911, XCII, 197.

[4] *Eng. Mining J.*, 1911, XCII, 928.

[5] *Mining Met.*, 1923, IV, 519.

to the top of the caved area, where it is distributed by a wooden launder 150 ft. long having 2-in. holes in the sides. It has been determined that it takes from 7 to 72 hr. for the water to percolate to the drainage tunnel. At the present rate of shifting launders, it will take 20 yr. to exhaust the mine. Precipitation takes place on detinned scrap placed in launders 32½ by 32½ in. one on each side of the haulage track in the tunnel. The launders are 3,200 ft. long in the tunnel and 1,400 ft. outside. They are connected at intervals with cross-over launders for by-passing the solution during cleaning.

The launders have a wooden grating with holes ¼ by ½ in. placed about a foot below the solution level. Once a day the solution is cut off from each section and the copper hosed off from the iron into the compartment below the grating.

The solution entering the launders contains in grams per liter: Cu 8.07, Fe'' 0.32, Fe''' 0.21, free H_2SO_4 0.34, Al_2O_3 1.44, CaO 0.55, Cl 0.096.

The copper precipitate averaged in Feb., 1923, Cu 92.06 per cent, S 2.24, Fe 2.9, Insol. 2.0, Pb, 0.12.

The financial statement for the first six months of 1923 was as follows:

Gross pounds Cu produced	1,303,239
Cu deducted, pounds	79,804
Net production, pounds	1,229,435
Average price per pound, cents	15.33
Gross receipts	$188,474.29
Total profit	98,914.75
Smelting charges	36,180.54
Operating charges	53,379.00
Smelting charges per pound, cents	2.943
Operating charges per pound, cents	4.341
Profit per pound, cents	8.046

197. Leaching Sulphide Ore after Conversion into Sulphate by Sulphatizing Roasting.[1]—The ore to be suited for this process must be a cupriferous pyrite, rich in FeS_2, poor in CuS_x; if there is not enough FeS_2, this will have to be supplied; sulphatizing agents, such as $FeSO_4$, $Al_2(SO_4)_3$, $NaHSO_4$, have been added to the ore charge.

The roast has to be carried on slowly and at a low temperature. The ore may be in lump form or finely divided. Lump ore is roasted in heaps or kilns, fine ore in kilns or muffle furnaces. Lump ore roasted in heaps will always be imperfectly sulphatized. A satisfactory yield in Cu can be obtained only by supplementing the roasting by some additional process, such as weathering; the same is likely to be true with kiln-roasted ore, whether this is coarse or fine; fine-ore muffle furnaces, which permit a good control of temperature and air, give a good extraction without necessitating any auxiliary treatment.

198. Sulphatizing Heap Roasts. General.—It is doubtful if this process will ever be practiced again due partly to the fact that heap-roasting is prohibited by law in most communities. Three examples will be given, however, of former practice to furnish data for the student of leaching.

[1] Experiments of SCHOELLER on slimes: *J. Soc. Chem. Ind.*, 1913, XXXII, 677.

1. *Rio Tinto*[1] is the best known example where the process of heap-roasting was carried on, until 1888 when the passing off of the sulphurous gases into the air was forbidden by law. Along the floor on which a heap is to be erected are built horizontal dry-stone air flues 12 to 15 in. wide by 5 to 18 in. high. Usually three flues run longitudinally, 13 ft. apart, and one transversely. At the intersections dry-stone chimneys are erected. Small heaps, 20 to 26 ft. in diameter and 10 ft. high, hold 200 tons of ore, burn two months, and require 0.21 cord of wood per ton of ore; large heaps are oblong, 56 by 33 ft., and 11 to 12 ft. high, hold 1,500 tons of ore, burn six months, and require only 0.07 cord; medium-size heaps, 98 by 16 ft. and 8 ft. high, hold 330 tons of ore. The loss in weight by roasting is about 12 per cent. Small heaps yield more $CuSO_4$ than large. The average extraction of Cu is 84 per cent. Roasted ore is transferred in 2-ton side-dump cars to cemented and asphalted masonry vats, 30 ft. long by 8 ft. wide by 3 ft. deep, having false bottoms of rough planks; and is leached with water in five to seven consecutive washings of 36 cu. ft. of water per ton of ore, each lasting 24 hr. The later practice was to wash the ore in place as in the weathering process, and thus save handling.

TABLE LXXXVI.—SULPHATIZING ROASTING AND LEACHING AT RIO TINTO IN 1892

	Raw ore	Roasted ore	Leached ore
S	48.0	6.7	7.5
Fe	41.0	39.0	55.0
Cu	2.2	2.4	1.0
Pb	2.3	2.8	3.0
Zn	1.5	1.6	1.0
As	1.0	0.5	0.2
H_2O	0.2	13.0	4.5
O, loss	1.3	31.0	25.3
Insoluble	2.5	3.0	2.5
Total	100.0	100.0	100.0

The brown copper liquor with 120 to 225 g. Cu. per gallon is collected in a reservoir filled with raw fines as in the weathering process (§190) to reduce $Fe_2(SO_4)_3$ to $FeSO_4$, drawn into precipitating vats, 8 ft. wide by 3 ft. deep, charged with Fe, and then through precipitating flumes, 3 to 6 ft. wide, 1.5 ft. deep and over 1 mile long with a fall increasing from 0.4 to 2 per cent. The iron consumption is 1.25 Fe : 1 Cu. The cement copper with 80 per cent Cu is dried, packed, and shipped. The leached ore retains 0.02 per cent Cu; it is piled in waste heaps holding as much as 50,000 tons, weathered, and leached at intervals. The roasted ore weathers very slowly. In order to hasten decomposition, small heaps of raw ore are built against the large pile, ignited, and the fumes are made to enter the pile as much as possible.

[1] DEUMIÉ, *Bull. Soc. Ind. Min.*, 1887, I, 835; LAUNAY, *Ann. Mines*, 1889, XVI, 491; *Berg. Hüttenm. Z.*, 1890, XLIX, 229; *Eng. Mining J.*, 1890, L, 741; COLLINS, *Trans. Inst. Min. Met.*, 1893–94, II, 17; COURTNEY, *Proc. Inst. Civ. Eng.*, 1895–96, CXXV, 135; CHALON, *Rev. Un. Min.*, 1902, LVII, 201; Correspondent, *Mining J.*, 1910, LXXXIX, 731.

The elimination of As, Sb, and Bi by roasting is, according to Gibb,[1] As 76.8, Sb 22.0, Bi 14.8 per cent.

2. *Copperopolis, Cal.*[2]—Slatey pyritic ore with chalcopyrite containing 5 to 5.5 per cent Cu is crushed to pass a 3.5-in. ring, piled on two layers of cord wood, placed crosswise and covered with brush wood, to form heaps 8 to 16 ft. wide and 4 to 12 ft. high, holding 3,000 tons and roasting four months. The roasted ore, in which 40 per cent of the Cu is present as $CuSO_4$, is transferred to inclined wooden floors covered with tar paper, piled in heaps 300 by 150 by 15 ft., covered with undecomposed fines of the roast heap, and leached with H_2O and mother liquor from the precipitating vats. The solution with 7 per cent Cu, some FeO, MgO, and Al_2O_3, is run into two cement storage vats 14 by 14 by 16 ft. and thence drawn into a wooden copper-lined horizontal precipitating barrel 30 by 5 ft. supported by trunnions and provided with two charging openings and one relief valve for the escape of H. The barrel holds 3,000 gal. of liquor, is charged with iron, rotated at a speed of 4 r.p. hr., and precipitates the Cu in 2 hr. The decopperized solution and cement Cu are discharged through a coarse screen, attached to the charging opening, to retain the iron in the barrel, and through a second screen, to retain coarse particles, into one of two settling tanks; the clear mother liquor is drawn off to be used as a solvent. The cement copper, 90 to 97 per cent Cu, is washed, transferred to a drainage floor, dried on cast-iron pans heated by a direct fire from cord wood, and shipped. The fines covering the roasted heap are removed and placed on the wood bed of another heap or beneath it, as they form a layer that reduces loss of solution into the ground. The yield of copper is 40 per cent, the iron consumption is 1.15 Fe : 1 Cu.

3. *Agordo, Italy.*[3]—The distinguishing feature of the operation formerly carried out here is kernel roasting (§54) of pyritic ore with Cu 1.60, Fe, 42.00, S 20.00, As 1.40, Insol. 5.00 per cent, which gives 13 per cent kernels with 3 to 6 per cent Cu to be smelted, and 87 per cent rinds with < 0.5 per cent Cu to be leached. There are 64 vats of 1,400 to 1,700 cu. ft. capacity. A tank is filled in part with liquor of 14 to 15° Bé., then charged with about 4 tons of ore, which remains in contact with the liquor for 24 hr. The solution, now of 31 to 34° Bé., is drawn off, clarified, the $Fe_2(SO_4)_3$ reduced by SO_2 gas to $FeSO_4$, run into vats, 13 ft. 1.5 in. long by 9 ft. 10 in. wide by 4 ft. 11 in. deep, and the Cu precipitated by Fe; the $FeSO_4$ formed is recovered as green vitriol. The leached ore is washed twice, the H_2O remaining 24 hr. in contact in each wash. With an unsatisfactory extraction, the leached ore is spread as a cover over a roast heap and then leached again. When the Cu content has been reduced to 0.25 per cent, the ore goes to the dump. This represents an extraction of only 50 per cent. The consumption of iron is 2.5 Fe : 1 Cu; the high figure is due to the H_2SO_4 formed by the reduction of $Fe_2(SO_4)_3$ with SO_2; without this reduction the iron consumption was 3.27 Fe : 1 Cu.

[1] *Trans. A. I. M. E.*, 1903, XXXIII, 668.

[2] *Bull.* No. 23, *State Mineralogist Cal.*, 1902, p. 193; private communications by F. H. HARVEY, 1893, 1911, and G. McM. ROSS, 1912; process abandoned in 1904.

[3] MAZZUOLI, *Ann. Mines*, 1876, IX, 1900; *Berg. Hüttenm. Z.*, 1876, XXXV, 363; EGLESTON, *School Mines Quart.*, 1887–88, IX, 124, 256; ERNST and MONACO, *Berg. Hüttenm. Z.*, 1891, L, 26.

4. *Other Localities.*—Kernel roasting followed by leaching was tried at Ducktown, Tenn.[1] Other older examples are: Balan, Transylvania;[2] Maidenpec, Servia;[3] Szalathna, Hungary;[4] Colorado[5] (Monier process); Terrino process (heating with $Fe_2(NO_3)_6$).[6]

All the sulphatizing roasting processes enumerated suffer from the drawback that there is an imperfect control of temperature and air, with the consequence that the ore is roasted either too little or too much, and in most cases is more or less sintered. The imperfect extraction of Cu in the first leaching requires additional treatment of the ore in order to increase the yield.

199. Sulphatizing Muffle Roasts.—Roasting pyritic concentrate in a muffle furnace under controlled temperature and air has been carried out first in the laboratory by Warlimont,[7] and then at the works of Predazzo, Italy, by Hesse.[8]

Other laboratory data are those of Hollis, Lannon, Quayle and Grommon,[9] Austin,[10] Handy.[11] Large-scale work has been carried on by Wedge in his multiple-hearth down-draft muffle furnace (Figs. 232 to 233) and Laist.[12] The results of Wedge are assembled in Table LXXXVII.

[1] WENDT, *School Mines Quart.*, 1885–86, VII, 218.

[2] FLECHNER, *Oesterr. Z. Berg. Hüttenw.*, 1882, XXX, 355; 1883, XXXI, 455, 463.

[3] SIMONS, *Berg. Hüttenm. Z.*, 1885, XLIV, 58.

[4] BEAUGAY, *Ann. Mines*, 1884, VI, 453; *Berg. Hüttenm. Z.*, 1885, XLIV, 242; FARBAKY, *op. cit.*, 1894, LIII, 175, 183, 225, 241, 249.

[5] REICHENECKER, *op. cit.*, 1870, XXIX, 449; TRIPPEL, *Eng. Mining J.*, 1872, XIV, 114, 129.

[6] *Berg. Hüttenm. Z.*, 1888, XLVII, 171.

[7] *Metallurgie*, 1909, VI, 83, 127.

[8] *Op. cit.*, 1909, VI, 580.

[9] *Colo. School Mines Bull.*, 1908, IV, 112.

[10] *Mines Meth.*, 1912, IV, 9.

[11] *Eng. Mining J.*, 1912, XCIV, 487.

[12] *Eighth Internat. Congress Appl. Chem.*, New York, 1912, III, 151; *Trans. A. I. M. E.*, 1913, XLIV, 818, *op. cit.*, 1913, XLVI, 362.

TABLE LXXXVII.—SULPHATIZING ROASTS IN THE WEDGE MULTIPLE-HEARTH DOWN-DRAFT MUFFLE FURNACE

Copper-bearing mineral	Analysis raw ore, per cent							Kiln roasting gave extraction, per cent				S in kiln-roasted ore, per cent	Muffle roasting gave extraction, per cent			
	Cu	Fe	S	SiO_2 (Insol.)	CaO	MgO	Al_2O_3	In water	In acid	In-soluble	Total soluble		In water	In acid	In-soluble	Total soluble
Chalcopyrite	1.07	49.25	32.60	6.80	....	2.18	1.59	27.8	63.4	8.8	91.2	4.7	60.3	38.1	1.6	98.4
Chalcopyrite	3.52	9.76	9.54	66.5	....	....	....	....	....	....	....	....	60 to 70	20 to 22	20 to 8	80 to 92
Chalcopyrite	4.38	9.61	16.37	61.21	1.10	0.72	....	....	....	....	....	....	73.7	15.7	10.6	89.4
Bornite, some silicate and carbonate	3.40	11.05	13.02	63.90	....	....	....	....	....	....	....	....	80.80	11.8	7.4	92.6
Oxide	3.14	2.25	none(a)	85.5	....	....	....	....	....	....	....	....	92.0			
Silicate	1.86	2.79	0.80(b)	88.3	....	3.4(c)	2.58	....	....	....	....	....	95.2			

(a) Five per cent pyrite (47.5 per cent S) added. (b) Six per cent pyrite (47.0 per cent S) added. (c) Figure is H_2O.

At the works of Predazzo, Italy,[1] a 60-mesh concentrate, in which the Cu occurs as chalcopyrite, is treated; it contains Cu 7.1, Fe 17.25, S 8.66, CaO 2.90, MgO 0.10, P_2O_5 0.23, Al_2O_3 5.45, Insol. 49.97 per cent. The roasting furnace is a horizontal boiler-iron revolving cylinder, 6 ft. 6¾ in. in diameter and 12 ft. 5½ in. long, resembling a Brückner cylinder, provided with ribs to raise and stir the ore. The cylinder is enclosed in a brick chamber and heated externally from three naphtha atomizing burners, 6 ft. 6¾ in. from the shell; the flames strike a bridge wall, which deflects the gases downward that they may pass around the cylinder and leave near the top through a flue provided with a damper. The furnace makes 0.75 r.p.m., and receives a charge of 3 tons, which it roasts in 13 to 14 hr.; discharging and recharging take 4 to 5 hr., thus making the capacity for 24 hr. 4 to 5 tons; one man per shift tends the furnace. Through the air-inlet collar is inserted an iron-constantan thermoelectric pyrometer to measure the temperature, which at first is held at 480° C. and later at 560°. The outlet collar is connected with an earthenware acidproof suction fan which draws in the air necessary for oxidation (an occasional lack of air may be supplemented by an auxiliary fan blower) and delivers the gases to a dust flue connected with a stack. Of the Cu, 65 per cent is water-soluble, 31 per cent acid-soluble (hot H_2SO_4 of 17° Bé.). With ore containing 20 per cent Cu, 98 per cent is soluble in acid. The brick lining of the furnace becomes encrusted in time; the crust has to be removed several times a year, but 80 per cent of its Cu is water-soluble, and an additional 14 to 16 per cent acid-soluble. The furnace makes 20 per cent flue dust; 93 per cent of its Cu is acid-soluble. It is essential for good work to have just the right amount of air in addition to maintaining a correct temperature. At 340° C. the S begins to burn, the temperature of the ore rises to 400° C. and makes it necessary to diminish and then to shut off the naphtha flames. The air to be admitted is regulated by the damper, the amount necessary being indicated by the temperature of the charge. The metals Fe and Cu are sulphatized at the same time; but $FeSO_4$ is changed at 480° C. into $Fe_2O_3 \cdot 2SO_3$, and this is decomposed at 560° C., while $CuSO_3$ changes at 670° C. into $2CuO \cdot SO_3$, and this at 736° into CuO.

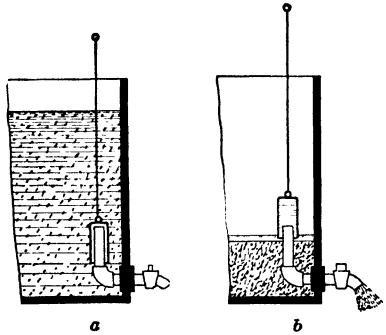

FIG. 228.—Borchers valve.

In roasting for CuO, which is done to free $CuSO_4$ from $FeSO_4$, the temperature is held between 590 and 610° C.

A charge of 3 tons of roasted ore is leached with 6 to 7 cu. m. (212 to 247 cu. ft., 1,585 to 1,850 gal.) H_2SO_4 of 17° Bé. at 40 to 50° C. in a Hofmann vat (§225) 9 ft. 10⅛ in. in diameter and 5 ft. 10½ in. deep; the stirrer makes 24 r.p.m. In order to prevent any settling of ore, a perforated lead pipe served with compressed air is attached to the side wall ⅜ in. above the bottom. Starting the

[1] HESSE, *Metallurgie*, 1909, VI, 580, with drawings.

stirrer requires 5 hp., but 2 hp. will keep it going. Five leaching tanks are placed in series on corresponding terraces, 3 ft. 11¼ in. high, and are connected at the sides by pipes, 3⅞ in. in diameter, provided with valves. The clarified liquors are drawn from the bottom through the settled ore by means of a Borchers valve. This[1] consists, as shown in Figs. 228*a* and *b*, of a suspended inverted cylindrical cup which can be raised and lowered by means of a handle. While the ore is being agitated, the cup is lowered, Fig. 228*a*, so as to close the top of the discharge pipe for clear liquor. When the ore has settled and the liquor become clear, the cap is raised so that the rim is in the liquor, and the discharge cock for liquor opened (Fig. 228*b*).

Roasted ore is charged into the top vat and fresh acid run gradually into the third; the ore travels downward in five steps, and the liquor upward, being raised by means of acid eggs. Tank No. 4 serves to wash the leached ore, and No. 5 to receive decopperized washed ore. Leaching in a tank lasts 2 hr., settling 0.5 hr. The Cu liquor drawn from the top tank measures 24° Bé., is only slightly acid, and contains 4 per cent Cu, 0.8 to 1.1 per cent $Fe^{\cdot\cdot}$, and 0.03 per cent $Fe^{\cdot\cdot\cdot}$. It is freed from Fe by the Hofmann process (§225) to 0.08 per cent Fe, in two stages of 50 hr. each, and filter-pressed. The residue from the press is treated with cold dilute acid, 1.5 to 2 per cent H_2SO_4, to dissolve any excess Cu and Cu_2SO_4. The Cu solution is concentrated to 33° Bé. and crystallized; the market vitriol is 98 per cent pure.

Experiments carried on at the works of the Shannon Copper Co., Clifton, Ariz., by Schimerka[2] with a sulphatizing roast of low-grade sulphide ore (Cu 2.37, S 3.02, SiO_2 58.60, Fe 8.90, Al_2O_3 13.90, CaO 2.10, MgO 2.38, Zn and Mn traces) resulted in an extraction of 84.5 per cent of the Cu with a consumption of 3.19 lb. H_2SO_4 per ton of ore.

The Bradley process[3] was tried on a large scale at Anaconda. Its leading steps are sulphatizing roast, lixiviation, treatment of liquor with $CaCl_2$, filtration of $CaSO_4$ from $CuCl_2$, precipitation of $Fe(OH)_3$ and $Al(OH)_3$ by CuO or $Ca(OH)_2$, filtration of hydroxide precipitates, and precipitation of CuO by $CaCO_3$. It is not in operation at present. It was found that in a chloride solution of Fe, Al, and Cu, the precipitant $CaCO_3$ separated first $Fe_2(OH)_3$, and then $CuCl_2 \cdot 3Cu(OH)_2$ with some $Al_2(OH)_3$.

The Hybinette process[4] is in operation in Norway. From 2 to 20 per cent Na_2SO_4 is added in the sulphatizing roast, the $CuSO_4$ formed is dissolved, and the Cu electrodeposited.

At the Braden copper mines[5] in Chile, sulphatizing in Wedge furnaces and electrodeposition of Cu is the process used for treating low-grade ores.

The sulphatization of the Cu in burned pyrite can be accomplished by roasting in a Wedge furnace, as shown in Table LXXXVII, or a furnace with a revolv-

[1] See also BORCHERS, *Metallurgie*, 1905, II, 375.

[2] *Eng. Mining J.*, 1913, XCVI, 1107.

[3] *Eng. Mining J.*, 1912, XCIII, 47, 533; *Met. Chem. Eng.*, 1912, X, 178; *Mines Meth.*, 1912, III, 404.

[5] *Met. Chem. Eng.*, 1913, XI, 6.

[6] YEATMAN, *Mining Sci. Press*, 1911, CIII, 769; Editor, *op. cit.*, 1913, CVI, 932.

ing hearth, as advocated by Richard.[1] The same can also be accomplished by spreading the ore, moistening with mother liquor, and exposing to the sun, as advocated by Truchot. The second method has been recommended for burned pyrite with <1.5 per cent Cu; it is not suited for richer ore.

200. Leaching Sulphide Ore after Conversion into Sulphate by Ferric Sulphate.—The leading facts regarding the action of $Fe_2(SO_4)_3$ upon CuS_x have been given in §172. In the weathering process (§188 to 190) the copper liquor is passed over FeS_2 to reduce $Fe_2(SO_4)_3$ to $FeSO_4$, but $Fe_2(SO_4)_3$ as a straight solvent for CuS_x is little used. The experiments of Austin[2] at Cananea form the most valuable record of the action of reagent and of its regeneration; the work of Gahl[3] at Morenci, Ariz., is of interest.[4]

201. Leaching Sulphide Ore after Conversion into Oxide by Roasting.—The roasting of sulphide ore that is to be leached has to be carried on at a low temperature in order to prevent the formation of silicate and ferrite, neither of which is readily dissolved. If the temperature of 450 to 480° C. recommended by Thomas[5] be maintained, the Cu will be present mainly as $CuSO_4$; if it be much exceeded to form CuO, there is danger of the Cu becoming insoluble.

202. Leaching Mill Tailing at Anaconda.[6]—The plant with a capacity of 2,000 tons per day was designed to work up the accumulated dump material averaging about 0.64 per cent Cu and 0.48 oz. per ton Ag. About 3 lb. per ton of the copper is oxidized and the remainder is as sulphide. Screen tests show 22.6 per cent of the material on 20 mesh, 82.0 per cent on 60, and 93.8 per cent on 100. The material runs 81 per cent SiO_2, about 3 per cent FeO, and about 10 per cent Al_2O_3.

The ore is first roasted in 28 six-hearth McDougall roasters fired on the third hearth from the top. The maximum temperature averages 535° C. on the fired hearth. The S is reduced from about 2.2 per cent in the feed to about 0.6 per cent in the product, one-third of which is as sulphate. The ore from the furnaces is discharged into water-cooled pipes 30 in. in diameter and 19 ft. long, which deliver it to a mixer where a small amount of water is incorporated to keep down the dust. The moist calcine is discharged on a belt, which delivers it to the leaching vats.

There are ten redwood tanks each 50 ft. in diameter and 14 ft. deep lined with 8-lb. lead. The average charge is 1,000 tons calcine. The filter bottom consists of 1¼-in. slats resting on 2 by 4 supports. On this are two layers of heavy cocoa matting protected by 1¾ by 3½-in. strips laid with 6-in. square spaces. The acid solutions rot the cocoa matting, but if not disturbed they serve the purpose for a long time after they are badly disintegrated.

[1] *Chem. Z.*, 1912, XXXVI, 565.

[2] *Mines Meth.*, 1910, II, 5.

[3] *Met. Chem. Eng.*, 1912, X, 306; *Trans. Am. Electrochem. Soc.*, 1914, XXV.

[4] J. IRVING (AUSTIN, *Mining Sci. Press*, 1914, CVIII, 77) patented a process in which $Fe_2(SO_4)_3$ is the solvent.

[5] *Metallurgie*, 1904, I, 8, 39, 59.

[6] LAIST and ALDRICH, *Trans. A. I. M. E.*, 1916, LV, 866; LAIST, *Trans. A. I. M. E.*, 1913, XLVI, 362; COLE, *The Anode*, 1923, IX, No. 8; U. S. Pat. 1076833, Oct. 13, 1913.

Up to 1919 the original procedure of adding salt to the charge was used, but at present straight acid leaching is practiced. An outline of both processes (copied from "The Anode") is given below:

OUTLINE OF THE "LEACHING WITH SALT" SCHEME
1,000 tons of calcine evenly distributed in the leaching tank

Solutions pumped on	Drainage to storage tanks
250 tons No. 1 solution. 0.9 per cent copper. 5 per cent acid. 9.5 per cent salt.	To copper-solution storage tank.
50 tons No. 2 solution. 0.3 per cent copper. 2 per cent acid. 6.5 per cent salt.	To copper-solution storage tank.
10 to 15 tons of salt spread over top of charge.	Drain valve closed.
100 tons No. 2 solution raised to 25 per cent acid with strong sulphuric acid.	To copper-solution storage until acid gets above 3 per cent. Then to the No. 1 solution storage tank.
110 tons No. 2 solution.	To No. 1 solution storage tank.
125 tons No. 1 wash water. Copper nil; 1 per cent acid; 6 per cent salt.	To No. 1 solution storage tank.
125 tons No. 2 wash water.	To No. 1 solution storage until per cent of acid drops to 3 per cent; then to No. 2 solution storage tank.
300 to 500 tons warm water. 50 to 60° C. from calcine coolers.	To No. 2 solution storage until acid drops to 1 per cent. Then to No. 2 wash-water storage tank.

Sample charge nine holes with a pipe sampler and turn water in, sluicing launder beneath tank, open sluicing gates and sluice out the charge with two 3-in. water hoses.

Cycle 4 to 5 days.

No. 1 wash water is three-fourths of the copper solution returned after it has passed over the scrap-iron launders. One-fourth of the solution passed over these scrap-iron launders is wasted to keep the storage solutions from becoming too heavy with iron and aluminum salts.

After the strong-acid stage, the charge is aerated 20 min. every 2 hr., by closing the drainage and circulating valves of the leaching tanks and turning 16-lb. air into the drainage line. The air rises through the charge and tends to loosen up the charge and is thought to have some oxidizing effect.

Salt is added to extract the silver present in the charge.

OUTLINE OF THE "LEACHING WITHOUT SALT" SCHEME
1,000 tons of calcine evenly distributed in leaching tank

Solution pumped on	Drainage to storage tank
250 tons No. 1 solution. 0.8 per cent copper; 5 to 6 per cent acid.	Hold in charge for 8 hr. Then drain to copper-solution storage.
100 tons warm water.	To copper-solution storage until solution is nearly all out of charge.
125 tons No. 1 solution plus. 25 tons strong acid from acid tank, by measurement.	Circulate from bottom to top of charge 36 to 48 hr., then drain to No. 1 solution storage tank.
200 tons No. 1 wash water. 0.2 per cent copper; 1 per cent acid.	To No. 1 solution storage until acid drops to 3 per cent.
200 tons No. 2 wash water. 0.05 per cent copper; 0.5 per cent acid.	Then to No. 1 wash-water storage. To No. 1 wash-water storage.
600 to 1,000 tons hot water.	To No. 2 wash-storage and copper-solution storage tanks.

Sample and sluice. Cycle 6 to 8 days due to roaster capacity cut down in 1919.

Aeration used after strong acid stage, the same as in salt leaching.

Both leaching schemes require approximately 70 lb. of strong sulphuric acid per ton of calcine.

The salt leaching process extracts about 50 per cent of the silver present, the other scheme about 5 per cent of the silver. Both schemes extract approximately 75 per cent of the copper in the charge.

The cement copper formed runs 70 per cent Cu. It is added to the charge in one of the roasters, the product of which is smelted in the reverberatories.

203. Leaching with SO_2.—A process for leaching with SO_2 was patented in 1902 by Neil and Burfeind,[1] but, because of difficulties in separating the solution from the pulp before precipitation of cupro-cupric sulphite ($Cu_2SO_3 \cdot CuSO_3$) took place, it never became a commercial success.

In the process developed at the Tucson, Ariz., station of the U. S. Bureau of Mines[2] the sulphites are oxidized as formed, which permits the removal of the copper in soluble form. The SO_2 attacks only the iron sulphide minerals. Some typical reactions are as follows:

(Malachite) $CuCO_3 \cdot CuOH_2O + 2SO_2 + H_2O = 2CuSO_3 + CO_2 + 2H_2O$

(Chrysocolla) $CuSiO_3 \cdot 2H_2O + SO_2 + H_2O = CuSO_3 + H_2SiO_3 + 2H_2O$

(Cuprite) $Cu_2O + 2SO_2 + H_2O = 2CuSO_3 + H_2O$.

A secondary reaction is

$$3CuSO_3 + CuO = Cu_2SO_3 \cdot CuSO_3 + CuSO_4.$$

The double salt is soluble in very weak sulphurous acid.

The apparatus is a wooden drum filled with baffles and special lifters. The pulped ore is fed in at one end and gases from a multiple-hearth roaster enter the other in continuous countercurrent flow. The baffles and lifters bring the pulp in intimate contact with the gas, which forms sulphurous acid with the water and then attacks the oxide copper minerals. Enough SO_2 must be present to effect rapid oxidation of sulphites to sulphates. The discharge temperature of the pulp should be about 50° C. Experiments on a 100-ton plant at Miami in 1919 gave maximum extraction of about 90 per cent.

204. Leaching Roasted or Oxide Ores with Ferric Salts, General.[3]—The principal difficulties which have hindered the general adoption of ferric salts as leaching agents are precipitation of basic salts in the ore and trouble in obtaining economical regeneration of the reagent. Middleton suggests that before recirculating the solution it be clarified in Dorr apparatus. Electrolytic deposition of the copper is unsatisfactory from solutions high in ferric salts, which makes these solvents less attractive than acids.

However, in places where power cost is low, experiments have shown[4] that, by a slight sacrifice of current efficiency, copper may be deposited commercially from sulphate solutions relatively high in iron. The return electrolyte from the

[1] U. S. Pat. 702582; JENNINGS, *Eng. Mining J.*, 1901, LXXI, 400; JENNINGS, *Eng. Mining J.*, 1908, LXXXV, 152, 556, 821.

[2] Bureau of Mines *Tech. Paper* 312.

[3] MIDDLETON, *Eng. Mining J.-Press*, 1922, CXIV, 451.

[4] Private Communication.

tank house, high in ferric sulphate, will successfully leach mixed oxide and sulphide ores yielding about 75 per cent of the sulphide copper and over 90 per cent of the oxide copper. The reaction with the sulphide reduces the iron to the ferrous condition. With certain ores this method may come into use.

Some of the reactions which may occur in leaching with ferric salts are as follows:

Ferric sulphate and cupric oxide:

1. $3CuO + Fe_2(SO_4)_3 = 3CuSO_4 + Fe_2O_3$
2. $3CuO + Fe_2(SO_4)_3 + 3H_2O = 3CuSO_4 + 2Fe(OH)_3$
3. $2CuO + Fe_2(SO_4)_3 = 2CuSO_4 + Fe_2O_3 \cdot SO_3$
4. $CuO + Fe_2(SO_4)_3 = CuSO_4 + Fe_2O_3 \cdot 2SO_3$
5. $2Fe_2O_3 + Fe_2(SO_4)_3 = 3Fe_2O_3 \cdot SO_3$
6. $Fe_2O_3 + 2Fe_2(SO_4)_3 = 3Fe_2O_3 \cdot 2SO_3$.

Ferric sulphate and cuprous oxide:

7. $Cu_2O + Fe_2(SO_4)_3 = CuO + CuSO_4 + 2FeSO_4$
8. $CuO + FeSO_4 = FeO + CuSO_4$
9. $Cu_2O + Fe_2(SO_4)_3 + H_2SO_4 = 2CuSO_4 + 2FeSO_4 + H_2O$.

Ferric chloride and cupric oxide:

10. $3CuO + FeCl_3 = 3CuCl_2 + Fe_2O_3$
11. $3CuO + FeCl_3 + 3H_2O = 3CuCl_2 + 2Fe(OH)_3$.

Ferrous chloride and cupric oxide:

$3CuO + 2FeCl_2 + 3H_2O = CuCl_2 + Cu_2Cl_2 + 2Fe(OH)_3$.

205. Leaching Sulphide Ore after Conversion into Chloride by Ferric Chloride.[1]—This method of treatment has rarely given any satisfactory result in actual work; the laboratory experiments of Froelich appear promising, but the proceeding as a whole cannot well become general, and will be applied only in special cases.

206. Doetsch and Froelich Processes. 1. *The Doetsch Process.*—This process,[2] once practiced at Rio Tinto and Tharsis, Spain, aims to convert CuS_x by means of $FeCl_3$ into soluble $CuCl_x$ with the formation of $FeCl_2$, to precipitate the Cu with Fe, and to regenerate the solvent by means of Cl.

2. *The Froelich Process.*[3]—Here a half-concentrated solution of $FeCl_3$ at 70 to 80° C. is circulated for a maximum of three days in a steam-jacketed agitating vessel, when CuS_x is converted solely into $CuCl_2$, no Cu_2Cl_2 being formed; the Cu is precipitated in a short time in a second vessel of the same construction; and the $FeCl_2$ regenerated with air in a third.

[1] CAMMERER, *Berg. Hüttenm. Z.*, 1891, L, 201, 262.

[2] Editor, *Eng. Mining J.*, 1882, XXXIV, 163; *Berg. Hüttenm. Z.*, 1882, XLVI, 461; LAUNAY, *Ann. Mines*, 1889, XVI, 498; *Berg. Hüttenm. Z.*, 1890, XLIX, 229; *Eng. Mining J.*, 1890, L, 741; DEUMIÉ, *Bull. Soc. Ind. Min.*, 1887, I, 858; *Berg. Hüttenm. Z.*, 1888, XLVII, 292; CUMMENGE and WIMMER, *op. cit.*, 1883, XLII, 292; COLLINS, *Trans. Inst. Min. Met.*, 1893–94, II, 23; FRANCKE, *Metallurgie*, 1910, VII, 487; MENGLER, *op. cit.*, 1911, VIII, 178.

[3] FROELICH, *Metallurgie*, 1908, V, 206; *Elektrochem. Z.*, 1908–09, XV, 163; *Z. für Chemische Apparatenkunde*, 1908, III, 65; AUSTIN, *Mines Meth.*, 1910, II, 68, 119; *Archimedian Screw Agitator*, DAVIS, G. E., "Handbook of Chemical Engineering," Davis Bros., Manchester, 1904, II, 151; HOFMAN, "General Metallurgy," 1913, p. 714.

The Slater process[1] is based upon the dissolving action of $FeCl_3$.

207. Leaching Sulphide Ore after Conversion into Chloride by Cupric Chloride. *Hoepfner Process.*—The only process to be considered is that of Hoepfner,[2] patented in 1888. It consists of two operations:

1. Dissolving finely crushed raw or rough-roasted ore in a hot solution of $CuCl_2$ in brine, whereby the $CuCl_2$ is reduced to Cu_2Cl_2, and the CuS of the ore converted into Cu_2Cl_2.

2. Dividing the solution into two equal parts, and passing one-half through the cathode and the other through the anode compartment of an electrolytic cell with parchment diaphragm.

3. Depositing Cu on the sheet-copper cathode, and setting free Cl at the carbon anodes, which converts the Cu_2Cl_2 of the anode division into $CuCl_2$. The two solutions combined after leaving the cell will form a regenerated solvent of $CuCl_2$ with half the Cu it contained when entering the cell. Solution may be expressed by $NaCl + CuCl_2 + CuS = NaCl + Cu_2Cl_2 + S$; $NaCl + 2CuCl_2 + Ag_2S = NaCl + Cu_2Cl_2 + 2AgCl + S$; and electrodeposition by $NaCl + Cu_2Cl_2 = NaCl + 2Cu + Cl_2$. A cell is estimated to absorb about 0.8 volt. The process has not proved successful on account of the difficulties encountered in getting the Cu into solution, and the short life of both the diaphragm and the anodes. Cohen and Lenz[3] did away with the diaphragm by a special arrangement of apparatus; this also reduced the e.m.f. necessary to <0.5 volt. There remain the imperfect extraction of the Cu from the ore and the corrosion of the carbons.

208. Leaching of Sulphide Ore after Oxidizing, Roasting, and Chlorinating by Ferrous or Calcium Chloride.—The two processes belonging to this heading are the Hunt and Douglas No. I and No. II.

1. *The Hunt and Douglas Process No. I.*[4]—This regenerative process is based upon the chloridizing effect of a neutral solution of $FeCl_2$ in hot (70° C.) brine upon pulverized oxide copper ore or sulphide ore which has been subjected to a complete oxidizing roast. The chemical reaction taking place is $3CuO + 2FeCl_2 + (x + 3)H_2O + yNaCl = 2CuCl + CuCl_2 + 2Fe(OH)_3 + xH_2O + yNaCl$. In the presence of Cu_2O there is separated Cu, according to $3Cu_2O + 2FeCl_2 + (x + 3)H_2O + yNaCl = 4CuCl + Cu_2 + 2Fe(OH)_3 + xH_2O + yNaCl$. This Cu might act upon $CuCl_2$ as shown by $Cu + CuCl_2 + xH_2O$

[1] Editor, *Eng. Mining J.*, 1913, XCVI, 595; MORSE, *Mining Sci. Press.*

[2] EILERS, *Eng. Mining J.*, 1892, LIII, 471; WEDDING, *Verhandel Verein. Beförd. Gewerbefl.*, 1892, LXXI, 133; *Berg. Hüttenm. Z.*, 1892, XLVI, 188; *Stahl u. Eisen*, 1892, XII, 315; *Rev. Un. Min.*, 1892, XVII, 159; HOEPFNER, *Z. angew. Chem.*, 1891, 160; *Mineral Ind.*, 1893, II, 285; COHEN, *Z. Elektrochem.*, 1895, II, 25; Editor, *Eng. Mining J.*, 1896, LXII, 584; RASCHIG, F., "Action of $CuCl_x$, upon Met S_y," Dissertation, Berlin, 1885; BORCHERS and MCMILLAN, "Electric Smelting and Refining," 1904, 266; THOMPSON and HAMILTON, "Electric Conductivity of $CuCl_2$, *Met. Chem. Eng.*, 1910, VIII, 347.

[3] *Z. Elektrochem.*, 1895, II, 25.

[4] HUNT, *Trans. A. I. M. E.*, 1871–73, I, 258; 1875–76, IV, 327; 1881–82, X, 11; OLCOTT, *op. cit.*, 1874–75, III, 394; HAUCH, *Oesterr. Z. Berg. Hüttenw.*, 1876, XXIV, 488; *Berg. Hüttenm. Z.*, 1877, XXXVI, 308; STAHL, *op. cit.*, 1891, L, 13; FRANCKE, *Metallurgie*, 1910, VII, 486; MENGLER, *op. cit.*, 1911, VIII, 177.

$+ yNaCl = 2CuCl + xH_2O + yNaCl$; but experience has shown that it is advisable to convert by roasting any Cu_2O present into CuO before leaching. The action of $FeCl_2$ upon CuO overheated in roasting is imperfect; a similar behavior with $Fe_2(SO_4)_3$ has been noted by Thomas.[1]

2. *The Hunt and Douglas Process No. II.*[2]—This process, also regenerative, is based upon the following:

(*a*) The solution of CuO in H_2SO_4, *viz.*, $CuO + H_2SO_4 + xH_2O = CuSO_4 + (1 + x)H_2O$.

(*b*) The partial chlorination of $CuSO_4$ by $FeCl_2$ or $CaCl_2$, *viz.*, $2CuSO_4 + FeCl_2 + xH_2O = CuSO_4 + CuCl_2 + FeSO_4 + xH_2O$ or $2CuSO_4 + CaCl_2 + xH_2O = CuSO_4 + CuCl_2 + CaSO_4 + xH_2O$.

(*c*) The formation and precipitation of CuCl by the forcing of SO_2 (9 per cent vol.) through the $CuSO_4$-$CuCl_2$ solution, with the simultaneous regeneration of the H_2SO_4, which is used again as solvent after the expulsion of dissolved SO_2, *viz.*, $CuSO_4 + CuCl_2 + SO_2 + (x + 2)H_2O_4 = 2CuCl + 2H_2SO_4 + xH_2O$.

(*d*) The regeneration of the $FeCl_2$, or $CaCl_2$, by the decomposition of CuCl with Fe, or $Ca(OH)_2$, *viz.*, $2CuCl + xH_2O + Fe = 2Cu + FeCl_2 + xH_2O$ or $2CuCl + xH_2O + Ca(OH)_2 = 2Cu(OH) + CaCl_2 + xH_2O$.

The advantages of this modification of process No. I are: absence of $Fe_2(OH)_3$ to be filtered, low consumption of Fe, and recovery of pure Cu. The disadvantages, loss of some Ag,[3] and imperfect precipitation of CuCl by SO_2.

209. Leaching of Sulphide Ore after Chloridizing Roasting.—Chloridation of sulphide copper with < 2.75 per cent Cu in connection with heap-roasting used to be the common practice at Rio Tinto.[4] Heaps 20 by 26 ft. and 10 ft. high with 800 tons of ore, or 26 by 30 ft. with 1,200 tons of ore, were built over three longitudinal and two transverse air flues, 20 in. square; the smaller heaps had two, the larger three, chimneys. The ore was roasted and then leached. The leached ore was removed from the tanks, mixed with raw ore, 2 to 3 per cent salt, and 2 to 3 per cent pyrolusite. This mixture was now placed upon an ordinary heap to a depth of 16.5 ft., when this had been fired and SO_2 was coming off freely. The chloridation then proceeded in the usual way. When the roasting was finished, the surface of the heap was divided by ridges into leaching beds 26 ft. square and watered. A leached heap was allowed to weather, and

[1] *Metallurgie*, 1904, I, 8, 39, 59.

[2] HUNT, *Trans. A. I. M. E.*, 1881–82, X, 11; 1887–88, XVI, 80; *Eng. Mining J.* 1885, XL, 37; DOUGLAS, *Min. Res. U. S.*, 1883–84, 279; HOWE, "Production Gold and Silver in the U. S.," 1883, 790; FRANKE, *Metallurgie*, 1910, VII, 486; MENGLER, *op. cit.*, 1911, VIII, 178; CANBY, *Eng. Mining J.*, 1911, XCI, 1156; DOUGLAS, *op. cit.*, 1911, XCII, 51; *Mineral Ind.*, 1908, XVII, 296; *Z. angew. Chem.*, 1891, IV, 24; *Iron*, 1892, XXXIX, 166; *Oesterr. Z. Berg. Hüttenw.*, 1892, XL, 88; *Berg. Hüttenm. Z.*, 1892, LI, 61; U. S. Pat. 903732, Nov. 10, 1908; *Eng. Mining J.*, 1911, LII, 51; LAUNAY, *Ann. Mines*, 1889, XVI, 502; *Eng. Mining J.*, 1890, L, 741; *Berg. Hüttenm. Z.*, 1890, XLIX, 230.

[3] Blowing hot air through dilute H_2SO_4 containing small amounts of $FeSO_4$, CuCl, and HCl causes first the formation of $Fe_2(SO_4)_3$ and $CuCl_2$, and then of some AgCl, which is dissolved by the chlorides, and later precipitated by Cu_2Cl_2.

[4] LAUNAY, *Ann. Mines*, 1889, XVI, 502; *Eng. Mining J.*, 1890, L, 741; *Berg. Hüttenm. Z.*, 1890, XLIX, 230.

then watered at intervals to recover additional amounts of copper. The encrusted cover was broken up when necessary.

210. Leaching of Sulphide Ore after an Oxidizing Followed by Chloridizing Roast. *Longmaid-Henderson Process.*—This mode of procedure was invented by Longmaid in 1842 and improved by Henderson in 1860; it goes by the name of Longmaid-Henderson process.[1] It is suited for burned pyrite, quite free from gangue and running low in Cu, and is based upon the chloridizing roasting of burned pyrite (cinder) for the conversion of Cu, and with it of any small amount of Ag and Au present, into soluble chloride, followed by the recovery of these metals from the solution by precipitation with Fe, the residual Fe_2O_3 forming a valuable iron ore. At present (1924) the use of sulphur as a source of H_2SO_4 has almost entirely replaced the burning of pyrite for this purpose, and consequently the Longmaid-Henderson process has fallen into disuse. It seems wise, however, to give a detailed description, for it has been successfully used over a period of years. A modification of the process, less important since the advent of the electrolytic refining of copper, is the precipitation of Ag and Au before the Cu, and the working-up of the two products independently.

Iron is present in roasted ore mainly as Fe_2O_3, then follow FeS_2, $Fe_2(SO_4)_3$ and $CuFeS_2$. Copper is present mainly as Cu_2S, then follow $CuSO_4$, CuO, and lastly comes $CuFeS_2$. The forms in which Cu is present and the respective amounts are shown in Table LXXXVIII.

TABLE LXXXVIII.—COPPER COMPOUNDS IN KILN-ROASTED PYRITE[a]

Sample No.	Cu, total, per cent	Copper, per cent, present as			
		$CuSO_4$	CuO	Cu_2S	$CuFeS_2$
1	4.41	50.00	16.1	28.10	5.70
2	4.67	14.46	13.1	64.47	8.03
3	4.42	31.39	22.8	45.90	0.00
4	1.86	12.00	19.8	54.90	13.30
5	1.06	32.10	18.6	38.80	10.50
Average...	3.28	27.9	18.1	46.43	7.51

[a] KOTHNY, *loc. cit.* The older data of WEDDING and ULRICH (*loc. cit.*) show different proportions. Complete analyses of burned pyrite are given by LUNGE (*loc. cit.*) and SCHELLE and SEMLITSCH (*loc. cit.*).

[1] LUNGE, G., "Sulphuric Acid and Alkali," Gurney and Jackson, London, 1913, I, part 3, 1470–1529; WEDDING and ULRICH, *Z. Berg. Hüttenw. Sal. Wesen i. Pr.*, 187, XIX, 298; *Berg. Hüttenm. Z.*, 1872, XXXI, 147; BRÄUNING, *Z. Berg. Hüttenm. Sal. Wesen i. Pr.* 1877, XXXV, 156; HOWE, "Production Gold and Silver in U. S.," 1883, 774; EGLESTON, *Trans. A. I. M. E.*, 1885, XIV, 198; SCHELLE and SEMLITSCH, *Oesterr. Z. Berg. Hüttenm.*, 1893, XLI, 517, 531; *Berg. Hüttenm., Z.*, 1894, LIII, 76; STAHL, *op. cit.*, 1894, LIII, 1; 1897, LVI, 185, 235, 319; HELMHACKER, *Mining Sci. Press*, 1898, LXXVI, 417; KRUTWIG, *Rev. Un. Min.*, 1899, XLVI, 35; CLEMMER, *Mineral Ind.*, 1899, VIII, 197 (Comment, *Eng. Mining J.*, 1900, LXX, 361); 1900, IX, 283; GIBB, *Trans. A. I. M. E.*, 1903, XXXIII, 669; BAHLSEN, *Metallurgie*, 1904, I, 258; COLBY, *J. Iron Steel Inst.*, 1906, III, 359; LILJA, *Met. Chem. Eng.*, 1910, VIII, 395; KOTHNY, *Oesterr. Jahrb.*, 1910, LVIII, 97; *Metallurgie*, 1911, VIII, 389; FRANKE, *op. cit.*, 1910, VII, 488; MENGLER, *op. cit.*, 1911, VIII, 179.

The burned pyrite to be treated by the process must contain little gangue (< 20, usually < 10 per cent), as this would consume an excessive amount of salt; it should not assay over 6 per cent Cu, as there is danger of the formation of kernels in roasting, which acts unfavorably upon chloridation (it usually contains < 4 per cent); and lastly must show 1 to 1.5 parts of S for every part of Cu to obtain a satisfactory percentage of $CuCl_2$. Any lack in S is made up by the addition of pyrite.

The operations to be considered are: crushing and mixing of ore and salt; chloridizing roasting; condensing of gases and vapors; leaching chloridized ore with water and tower liquor; clarifying the copper liquor; precipitation of Cu (with Ag and Au) by Fe; washing and refining the precipitated Cu; disposition of residue (blue billy, purple ore) from leaching; disposition of waste liquor; precipitation of Ag and Au independently of Cu; results and costs.

Illustrations of older plants have been given by Wedding (Widnes, St. Helens, England), Defrance (Hemixen, Belgium), and Bräuning (Oker, Germany), and of recent plants by Clemmer (Natrona, Pa.), and Colby (Newark, N. J.).

In Figs. 229 to 230 are given outline sketches of a modern 60-ton Longmaid-Henderson plant. Ore, *i.e.*, roasted pyrite or cinder, and salt are received in a delivery bin to be transferred by means of a 14-in. conveyor belt and tripper to two 100-ton cinder and one 20-ton salt bins. These raw materials are fed in weighed quantities to four 2-ton revolving mixers and thence discharged through chutes into two No. 4 Krupp ball mills[1] from which the mixed and ground pulp passes by means of conveyors or of chutes into the boat of the elevator which empties into a 60-ton storage bin. From this the pulp passes through a chute into a second elevator, which delivers into the 2-ton bin of the Wedge 5-hearth muffle furnace (detail in Fig. 232), where it is chloridized. The chloridized ore is discharged through four openings in the bottom into 1-ton cars, running on an elevated track, and delivered to the 2 by 7 = 14 leaching tanks (detail in Figs. 234 to 235), placed in two rows. The leached ore is removed from the tanks in 3-ton buckets traveling on an overhead trolley. The copper solution is collected in the concrete copper-liquor tank, whence it is run into nine copper-precipitating tanks placed in rows of three. These tanks receive the precipitating scrap iron through overhead trolley buckets filled from a storage building. The copper precipitate is transferred onto a copper screen moving over three wash tanks, freed from iron, washed, settled, and transferred to the filter press. The liquor freed from copper is run from the tanks into an open concrete catch pit charged with iron, in which floating particles of copper are settled and unprecipitated ones thrown out of solution. The effluent passes over a bright piece of iron which ought not to become tarnished.

It will be noted that sloping floors are made of reinforced concrete, and have upturned sides, in order that all drippings may be collected and conducted to a receiving pit.

[1] HOFMAN, "General Metallurgy," 1913, p. 590.

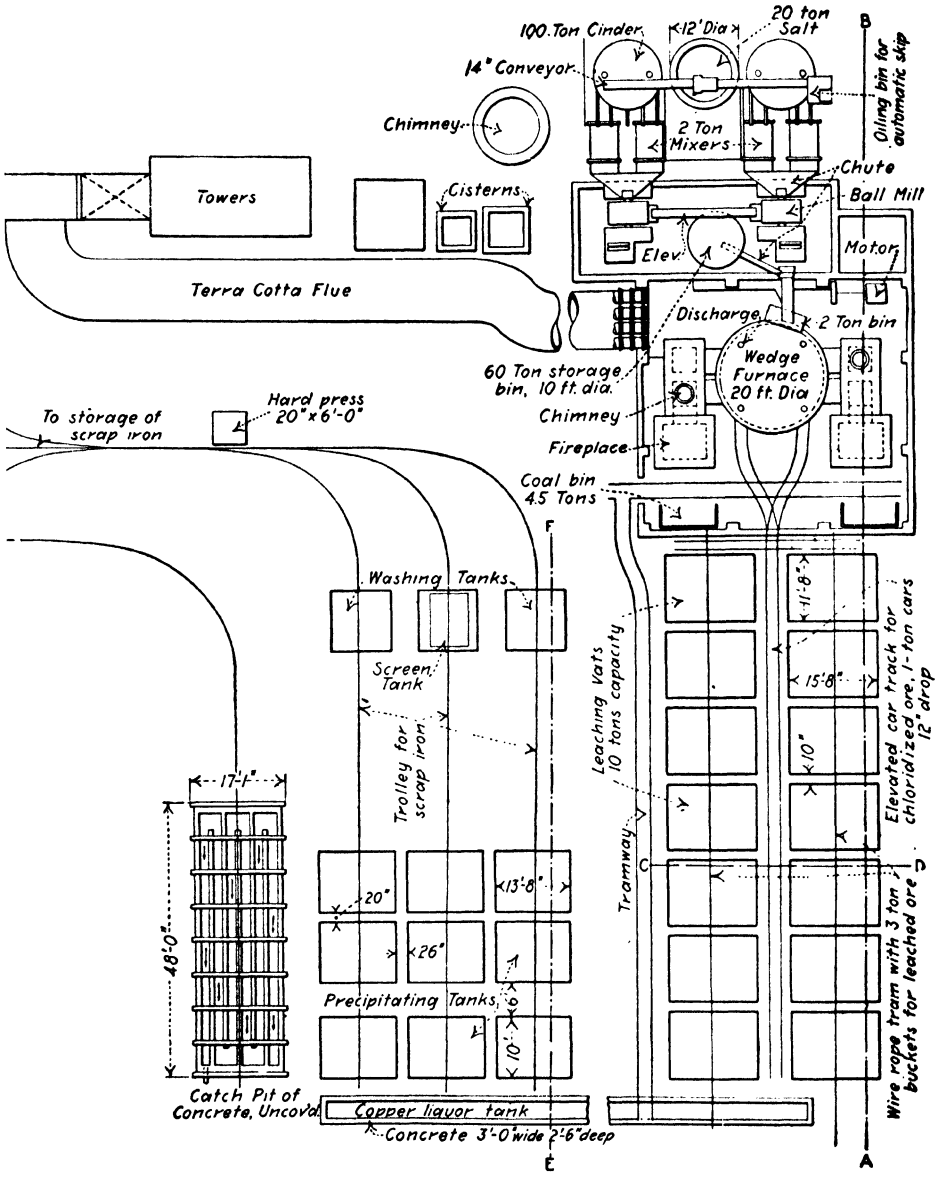

FIG. 229.—Longmaid-Henderson plant.

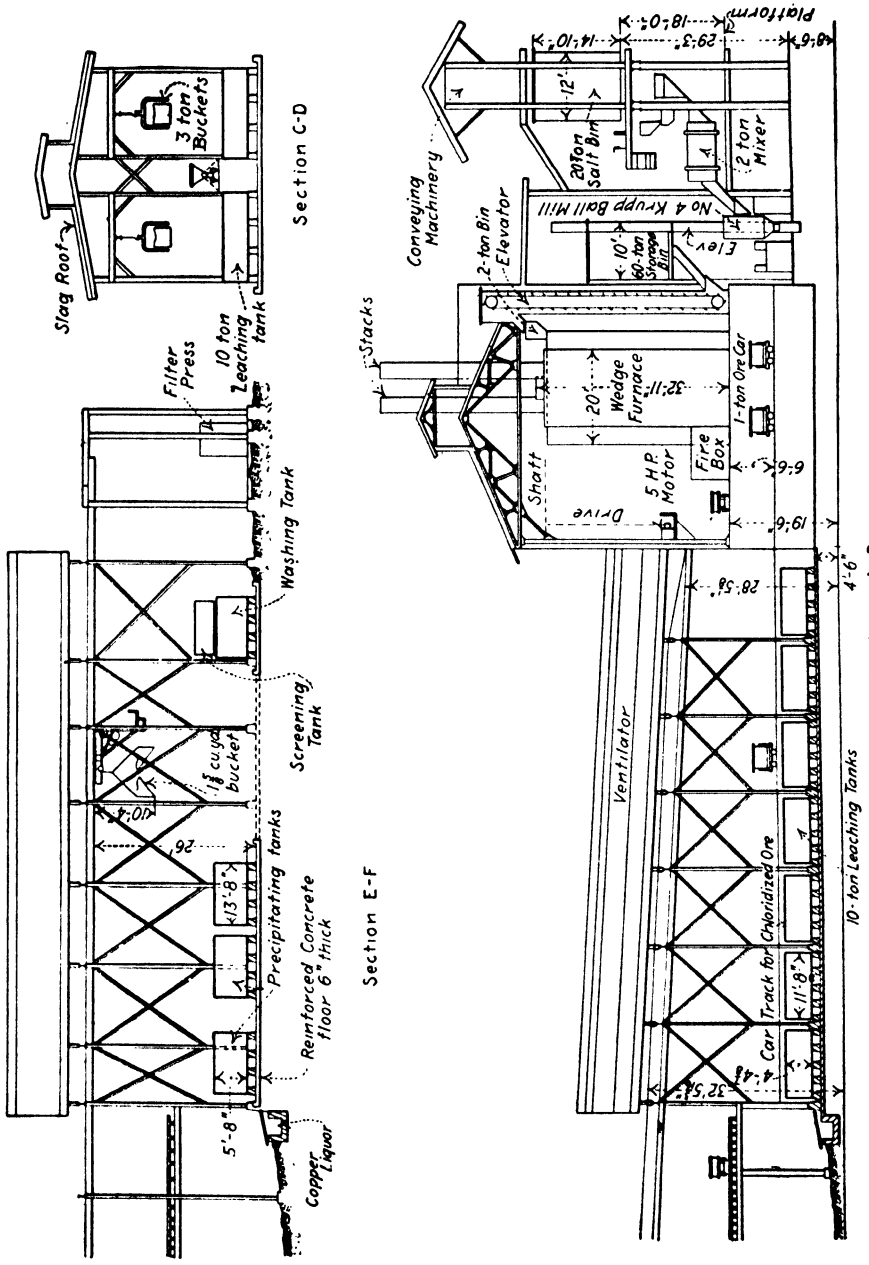

FIG. 230.—Longmaid-Henderson plant.

211. Crushing and Mixing of Ore and Salt.—Pyrite roasted in coarse-ore kilns does not exceed 3 in. in size, that from fine-ore kilns 0.25 in. As it is essential for a successful chloridation that ore and salt be intimately mixed, it becomes necessary to crush the two together. The finest size is probably 8-mesh, the coarsest 4-mesh; under 8-mesh makes too many fines for satisfactory filtration in leaching; over 4-mesh causes imperfect chloridation. Clemmer[1] states that the best results are obtained by crushing one-third of a mixture through an 8-mesh screen, the rest through a 20-mesh, and then mixing the two products. The machine commonly used is an edge roller;[2] sometimes a continuous Krupp ball mill is employed. In both cases attention has to be paid to the removal of dust. An edge roller, 9 ft. in diameter, with two runners 52 in. in diameter, weighing each 9,000 lb. and making 25 r.p.m., will crush through an 8-mesh sieve in 24 hr. 100 to 150 tons of mixture (10 per cent NaCl) according to moisture and coarseness of the feed; a ball mill, 6 ft. 2½ in. in diameter, holding 80 to 100 steel balls, 5 in. in diameter and smaller, weighing about 18 lb. each, and making 22 r.p.m., will treat with an 8-mesh screen in 24 hr. 100 to 120 tons of mixture (10 per cent NaCl). The smallest amount of salt necessary for an ore with 4 per cent Cu is given by Kothny (see below) as 7.5 per cent; the largest range in practice is from 10 to 20 per cent; the usual limit until recently was 12 and 15 per cent, when Wedge reduced it with his down-draft furnace (see below) to 9 per cent. The salt is generally not dried before using, although dried salt is easier to crush. At Oker, carnallite ($KCl \cdot MgCl_2 + 6H_2O$) was used to replace some of the salt in order to furnish the H_2O necessary for the formation of HCl. The crushed mixture is screened to insure uniformity.

212. Chloridizing Roasting and Condensation of Gases.—The chloridation of copper has been explained as being due largely to the presence in burned pyrite of $CuSO_4$, which, acting upon NaCl, formed $CuCl_2$ and Na_2SO_4, and to the decomposing effect of $FeSO_4$, either present as such or formed by the oxidation of FeS. The $FeSO_4$ from both sources could act upon NaCl and form $FeCl_2$, $FeCl_3$, and Na_2SO_4; or, after it had been decomposed by heat, the SO_3 set free would convert Cu_2S into $CuSO_4$; or, acting upon NaCl, it would give Cl (which would chloridize Cu_2S) and HCl in the presence of H_2O (and chloridize CuO). Kothny's analyses prove that neither FeS nor $FeSO_4$ is present in burned pyrite. His experiments[3] have shown that with burned pyrite mixed with salt and roasted at a temperature of 500 to 600° C. the following reactions take place:

1. $2FeS_2 + 7O_2 = Fe_2(SO_4)_3 + SO_2$ and $Fe_2(SO_4)_3 + 6NaCl = 3Na_2SO_4 + Fe_2Cl_6$.

2. $2Cu_2S + 5O_2 = 2CuSO_4 + 2CuO$, $2CuO + 2SO_2 + O_2 = 2CuSO_4$, and $3CuO + Fe_2(SO_4)_3 = Fe_2O_3 + 3CuSO_4$ to some extent.

3. $CuSO_4 + 2NaCl = CuCl_2 + Na_2SO_4$, $3CuO + Fe_2Cl_6 = Fe_2O_3 + 3CuCl_2$.

[1] *Mineral Ind.*, 1900, IX, 283.

[2] The Carlin mill: CLEMMER, *op. cit.*, p. 284.

[3] *Oesterr. Jahrb.*, 1910, LVIII, 97; *Metallurgie*, 1911, VIII, 389.

4. $Cu_2S + 4Cl + 3O = 2CuCl_2 + SO_3$ and $3Cu_2S + 2Fe_2Cl_6 + 9O = 6CuCl_2 + 2Fe_2O_3 + 3SO_3$, negligible.

5. $2NaCl + SO_3 + H_2O = Na_2SO_4 + 2HCl$ and $CuO + HCl$ = no reaction.

6. $Ag_2SO_4 + 2NaCl = 2AgCl + Na_2SO_4$ and $Au + 3Cl = AuCl_3$.

The $CuCl_2$ formed may be decomposed; by $2CuCl_2 + O_2 = 2CuO + 2Cl_2$, a reaction which is much retarded by the presence of Cl and HCl; by $CuCl_2 + H_2O = CuO + 2HCl$; by $CuCl_2$ + heat = $CuCl + Cl$, which does not take place between 350 and 550° C. in the presence of much NaCl.

Kothny concludes that for a successful chloridizing roast it is essential: (1) that ore and salt be finely divided (8-mesh) and intimately mixed; (2) that there be free access of air and vigorous rabbling; (3) that the amount of S present be equal to that of Cu; (4) that there be enough NaCl added to the charge, with 4 per cent Cu not < 7.5 per cent NaCl; (5) that the roast be not unnecessarily prolonged; and (6) that the temperature be held between 500 and 600° C.

Both reverberatory and muffle furnaces are used for roasting, and the ore rabbled either by hand or mechanically. The leading advantages of the rever-

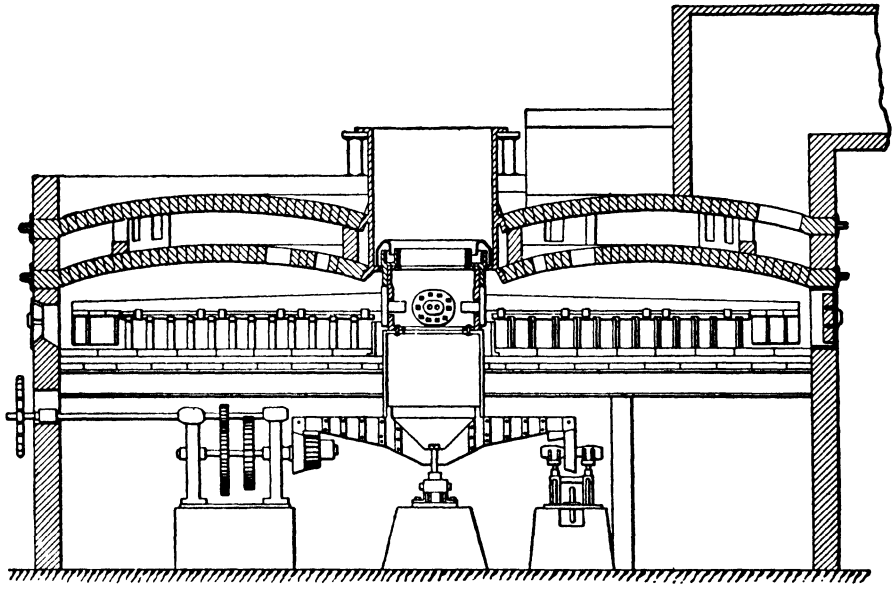

FIG. 231.—Wedge single-hearth mechanical reverberatory roasting furnace with top muffle effect.

beratory furnace are its cheapness, and the fact that it requires about half the fuel of the muffle furnace; the latter gives a more even temperature, furnishes a more concentrated gas, requiring half the condensing capacity for the towers, and has a stronger oxidizing and chloridizing effect, owing to the absence of fuel gases and the consequent smaller velocity of the gas current. Most reverberatory and muffle furnaces are single-hearth; recently multiple-hearth muffle furnaces have come into use, both hand and mechanically rabbled, and have effected a considerable saving in salt. Hand-rabbled furnaces have a very small

capacity, from 2, more commonly from 5, to 9 tons in 24 hr. They treat a charge weighing from 1,580 to 9,600 lb. in from 6 to 12 hr., the great variation being due to the percentage of Cu and the manner of operating. The mechanical furnaces of Wedge treat about 70 tons in 24 hr. and furnish on account of the mechanical rabbling a product richer in $CuCl_2$ than can be obtained with hand work. For the practice in the U. S., hand-rabbled furnaces need not be discussed in detail; they are fully treated by Lunge and Schelle and Semlitsch.

1. *The Wedge Single-hearth Mechanical Reverberatory Furnace with Top Muffle Effect.*—This furnace, shown in vertical section in Fig. 231 is 32 ft. in diameter, has a hearth 13 ft. wide, corresponding to a hearth area of 768 sq. ft.; the central shaft, 4 ft. in diameter, has four water-cooled stirring arms with heavy cast-iron rabbles, and makes one revolution in 4 min.; with two arms the shaft would make 2 r.p.m. The furnace is heated with four to six oil burners. The products of combustion and the roaster gases pass off together through the chamber covering the roof of the hearth before they enter the flue leading into the gossage tower. The burned pyrite, crushed with 17 per cent NaCl in an edge roller or a ball mill to 8-mesh, is fed mechanically near the center of the furnace and travels over the hearth in from 2 to 2.5 hr., giving a chloridation of 96 per cent ($CuCl_2$ 40 per cent, Cu_2Cl_2, CuO, etc., 56 per cent); the temperature is held at from 600 to 650° C. The furnace requires a 5-hp. engine, consumes 11.6 gal. oil residuum (= 178.6 lb. coal) per ton charge, and puts through in 24 hr. from 80 to 100 tons of charge.

2. *The Wedge Single-hearth Mechanical Muffle Furnace.*—This is of the same general construction as the reverberatory furnace, with this difference: that both the upper and lower heating chambers of the muffle are heated by oil burners, and that the fire and roaster gases pass off separately to the stack and the gossage tower. A muffle furnace consumes twice as much fuel as the reverberatory furnace, and the bottom is readily corroded if the chloridation is carried through on a single hearth. For this reason the reverberatory furnace is more common than the muffle furnace with a single-hearth type, in spite of the great advantages the latter offers over the former as regards control of temperature and concentration of roaster gas.

The single muffle had recently been replaced by the following furnace.

3. *The Wedge multiple-hearth, mechanical down-draft muffle furnace* is shown in vertical section in Fig. 232. This is a five-hearth muffle furnace, 18 ft. 5 in. inner diameter and 31 ft. high. The feeding and course of the ore are the same as in the Wedge roaster (§61, Fig. 57). On account of the low temperature the rabble arms are air-cooled instead of water-cooled. The leading novelty lies in the manner of firing. In the older mechanical muffle furnaces constructed upon the McDougall principle, as, *e.g.*, in the Haas furnace,[1] a single flame enters beneath the bottom muffle and then travels upward in zigzag in the flues enclosing the muffles. The result is that the bottom muffle is

[1] INGALLS, W. R., "Metallurgy of Zinc and Cadmium," Hill Publishing Co., New York, 1903, p. 143.

overheated, if the upper muffles are to be brought to the desired temperature; they are too cool, if the heat in the bottom muffle is correct. In the Wedge furnace each muffle is heated independently by having either oil or gas burners placed between the roof of one muffle and the floor of the next following, as shown in Fig. 232, or by having, with solid fuel, two fireplaces on the main floor and conducting the fire gases independently to the heating spaces between

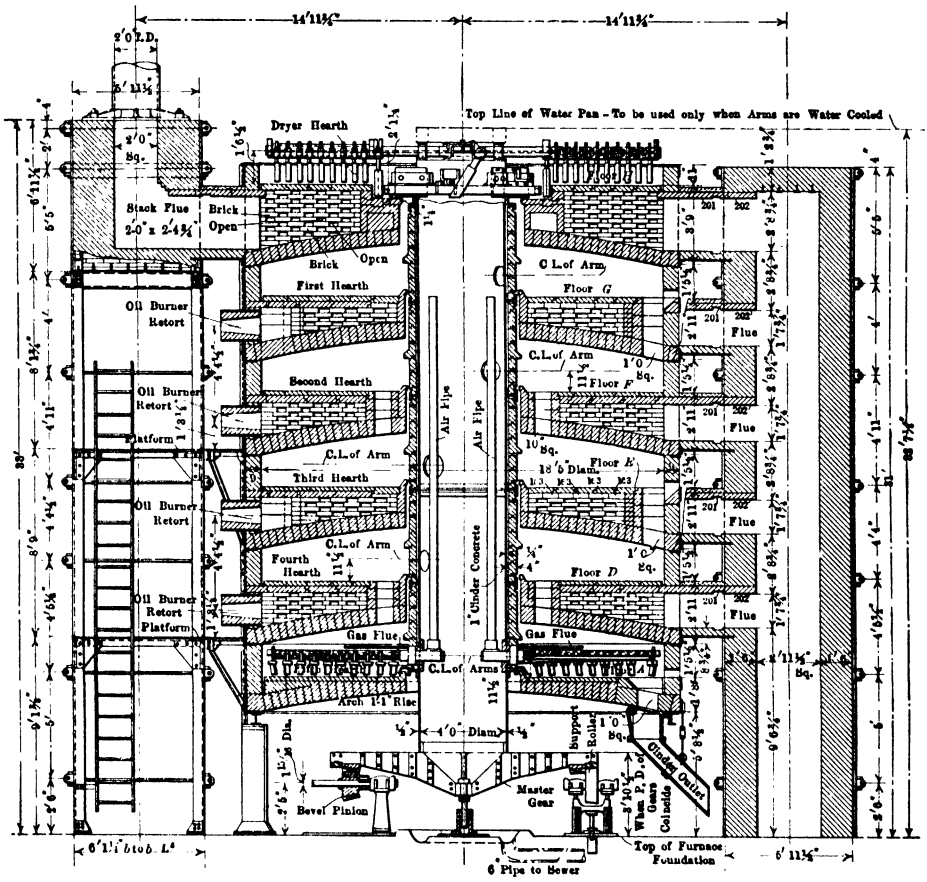

FIG. 232.—Wedge five-hearth mechanical down-draft muffle roasting furnace.

the muffles. Figure 232 shows the oil burners, of which there are eight; the products of combustion pass off at the right through horizontal flues into a main downtake leading to the stack. The roaster gases zig-zag upward and pass from the top muffle into a main leading to the gossage tower. The ore passes through the furnace in 8 to 11 hr., being stirred by two arms on a hearth making one revolution in 2 min. The chloridation is 86 per cent Cu as $CuCl_2$; an additional 10 per cent Cu or more is recovered by leaching with tower liquor. The furnace requires a 5-hp. engine, treats in 24 hr. 60 tons of Rio Tinto burned pyrite containing 3.5 per cent Cu, ground through a 20-mesh sieve and mixed

with 7 per cent salt; and consumes 280 lb. bituminous coal per ton of chloridized ore, which corresponds to 18.7 gal. oil residuum.

The following is a record of burned Spanish pyrite crushed through a 20-mesh sieve and mixed with 10 per cent salt, passing through the five-hearth muffle furnace.

First hearth, 375° C.	Water—soluble	Cu.....	0.54 per cent	= 26.09 per cent extraction.
	Acid—soluble	Cu.....	0.97 per cent	= 46.80 per cent extraction.
	Insoluble	Cu.....	0.56 per cent	=
	Total	Cu.....	2.08 per cent	= 72.89 per cent extraction.
Second hearth, 510° C.	Water—soluble	Cu.....	0.66 per cent	= 31.9 per cent extraction.
	Acid—soluble	Cu.....	0.95 per cent	= 45.8 per cent extraction.
	Insoluble	Cu.....	0.46 per cent	
	Total	Cu.....	2.07 per cent	= 77.7 per cent extraction.
Third hearth, 560° C.	Water—soluble	Cu.....	1.72 per cent	= 83.5 per cent extraction.
	Acid—soluble	Cu.....	0.18 per cent	= 8.9 per cent extraction.
	Insoluble	Cu.....	0.16 per cent	
	Total	Cu.....	2.06 per cent	= 92.4 per cent extraction.
Fourth hearth, 620° C.	Water—soluble	Cu.....	1.81 per cent	= 84.6 per cent extraction.
	Acid—soluble	Cu.....	0.29 per cent	= 13.5 per cent extraction.
	Insoluble	Cu.....	0.04 per cent	
	Total	Cu.....	2.14 per cent	= 98.1 per cent extraction.
Fifth hearth, cooling off	Water—soluble	Cu.....	1.82 per cent	= 85.04 per cent extraction.
	Acid—soluble	Cu.....	0.28 per cent	= 13.06 per cent extraction.
	Insoluble	Cu.....	0.04 per cent	
	Total	Cu.....	2.14 per cent	= 98.10 per cent extraction

4. *The Wedge Multiple-hearth Mechanical Down-draft Reverberatory and Muffle Furnace.*—This furnace, shown in vertical section in Fig. 233, has eight hearths over which the ore travels downward in the usual way in from 8 to 13 hr., being stirred with two arms on each hearth making one revolution in 2 min. as in the other furnaces of Wedge. The novel part of this furnace is the mode of firing from two lateral fireplaces. The gases from fireplace *a*, *e.g.*, rise in the vertical flue, enter ports *e* and *f*, come in contact with the ore spread over hearths Nos. 1 and 2, heat and kindle it, and pass off into flue *b*, leading to the stack. The kindled ore is transferred onto hearth No. 3, which forms the bottom of the muffle. The heat generated by oxidation and chloridation is sufficient to make extraneous fuel unnecessary while the ore travels over hearths Nos. 3, 4, and 5. If the temperature becomes too low on hearths Nos. 6 and 7, the dampers closing the heating flues *c* and *d* are drawn the amount required to furnish the muffles the desired amounts of heat. The gases from the six muffles pass off into the condensation tower. By the arrangement shown, the temperature of the furnace can be regulated to suit the character of the ore that is to be chloridized. With a pure Spanish pyrite the dampers of flues *c* and *d* will remain closed, as the temperature of 500 to 600° C. is sufficient to

obtain with a low percentage of NaCl a high chloridation. With burned pyrite containing some blende or galena, the dampers will have to be opened more or less in order to furnish the heat necessary for the decomposition of $ZnSO_4$ and the partial dissociation of $PbSO_4$.

This Wedge furnace is identical with that of Ramén and Beskow used in most of the modern European plants, the furnaces having been constructed independently on either side of the Atlantic.

5. *Condensation of Gases.*—The gases issuing from a chloridizing furnace contain SO_2, SO_3, H_2SO_4 (from $SO_2 + Cl_2 + 2H_2O = H_2SO_4 + 2HCl$), Cl, HCl, N and O, some volatilized Cu_2Cl_2, As, Sb, flue dust, and, with reverberatory furnaces, CO_2 and perhaps some CO. They ascend in a gossage tower in which

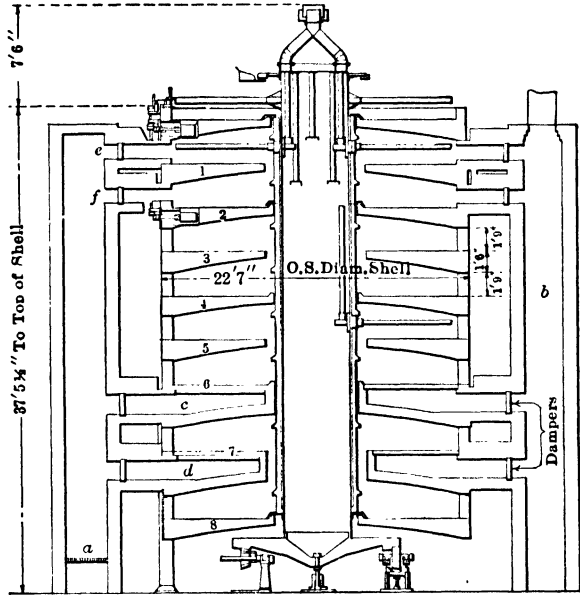

FIG. 233.—Wedge multiple-hearth mechanical down-draft reverberatory and muffle furnace.

water trickles down slowly absorbing the acids, condensing volatilized chlorides, and collecting particles of flue dust. The collected water forms the "tower liquor" used as a solvent for Cu_2Cl_2 and CuO. The gossage tower is a square or circular shell of heavy sheet lead suspended in a wooden frame or a square brick tower lined with acidproof brick, packed in the case of muffle furnaces with coke or quartz, in the case of reverberatory furnaces with acidproof brick laid checkerwise, as larger interstitial spaces are necessary for the greater volume of gas.

With the quickly working muffle furnaces at Natrona there is in use one tower 12 ft. square and 50 ft. high for seven furnaces having a total hearth area of 1,900.75 sq. ft., or 1 sq. ft. horizontal condensing area for 13.2 sq. ft. hearth area, treating, in 24 hr., 1,400 lb. ore mixture. With the slowly working reverberatory furnaces of Oker there are in use two towers 5.6 ft. square and

17.4 ft. high for three furnaces having a hearth area of 720 sq. ft., or 1 sq. ft. horizontal condensing area for 22.9 sq. ft. hearth area, treating in 24 hr. 961.8 lb. ore mixture.

With the 5-hearth Wedge muffle furnace having a hearth area of 1,246 sq. ft. and treating 60 tons of charge in 24 hr. there is in operation a gossage tower 8 ft. 4 in. square (= 69.4 sq. ft.) and 41 ft. 3 in. high, or 1 sq. ft. horizontal condensing area for 18 sq. ft. hearth area, treating in 24 hr. 1,734 lb. ore mixture.

With the Wedge reverberatory furnace the condensing area required is twice that for the muffle furnace.

About 48 cu. ft. of water are required per ton of roasted ore.

213. Leaching Chloridized Ore by Water and Tower Liquor.—The leaching vats at present are usually 12 ft. square, 4 to 5 ft. deep, and hold about 10

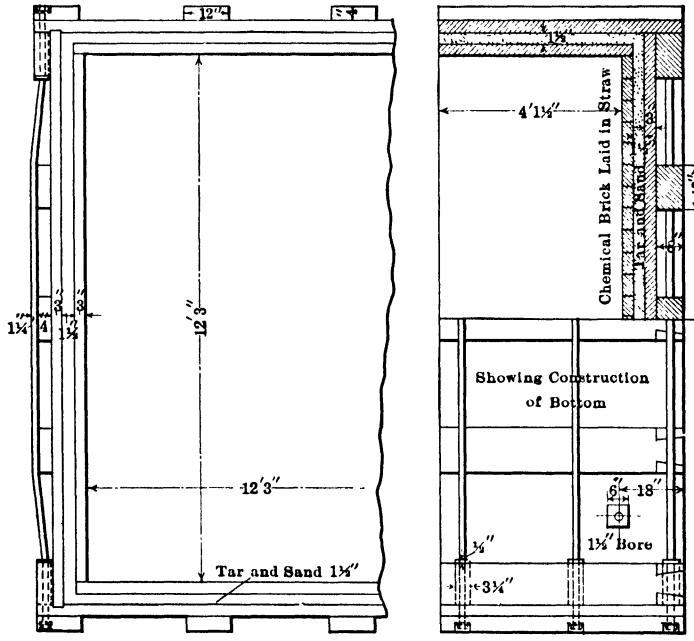

FIGS. 234–235.—Leaching vat, paved with acid-proof brick laid in straw.

tons of charge. They are made of 3-in. planks, well calked with oakum and red lead, and tied by cast-iron corner pieces and wrought-iron girder-shaped screw bolts. The wood is painted on both sides with tar; in some instances the vats have been lined with lead. The filter bottom has been constructed in various ways. The simplest is to place on the floor close together 2 by 2 in. slats beveled at the top and cover them with a filter bed of small pieces of coke. A better method is to protect the wooden floor with a layer of hard-burned acidproof perforated brick and place on this a gravel filter 6 in. deep, made up of one 3-in. layer of pebbles 1.5 in. in diameter, followed by another of sand 0.75 in. in diameter. Figures 234 to 235 show the vat of the Pennsylvania Salt Manufacturing

Co. of Natrona, Pa. The 3-in. yellow-pine planks used in the construction are well tarred before being put in place. The vat consists of an outer and an inner box separated by a 3-in. layer of sand and soft pitch poured in place. The filter consists of hard-burned acidproof brick laid in straw. Figures 236 to 237 represent the spigot for drawing off the solution. In front of a row of tanks are two launders for strong and for weak liquors to be delivered to the clarifying tanks on the next lower level.

The English mode of operating is to dump the ore hot (200° C.) into the vat and then fill the vat with weak wash liquor. This remains in contact with the ore for about 2 hr., becomes heated, and, dissolving most of the $CuCl_2$, becomes strong (8° Bé.), so that it can be drawn into the clarifying and thence into the precipitating vats. When withdrawn, the ore is washed with hot water, producing weak liquor, which is stored and serves as first wash water for another tank. The water leaches carry at least 75 per cent of the Cu and 95 per cent of the Ag. The Cu extracted is purer than that recovered by means of the tower liquor with which the ore vat is now filled, because this liquor may contain As, Sb, Bi, Pb, etc. The ore used to require as many as six treatments with tower liquor to extract an additional 20 per cent of Cu.[1] The leaching is not continuous; the different washes are allowed to remain in contact with the ore for given periods, which are determined in part to avoid prolonging the whole treatment beyond 48 hr.

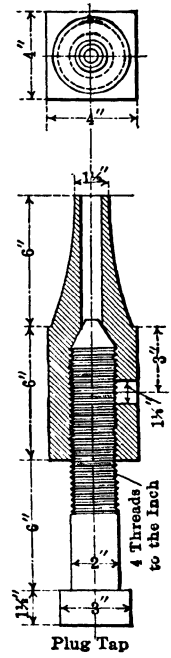

FIGS. 236–237.—Spigot of leaching vat.

At Oker, Germany, part of the mother liquor from the precipitation of the Cu is used as first solvent after having been heated to 40° C. This liquor, being used over and over, becomes charged with NaCl, $FeCl_2$, and other chlorides; it weighs 18° Bé., and contains Cu 0.015, Pb trace, FeO 2.14, Fe_2O_3 0.15, Al_2O_3 0.11, ZnO 0.06, MnO 0.31 (NiCo)O 0.01, CaO 0.12, MgO 0.52, Alk. 2.61, Cl 2.56, H_2SO_4 5.89, As and Sb traces, total solids 14.495 per cent. The $FeCl_2$ has a chloridizing effect upon CuO; the chlorides assist the solution of AgCl, $AuCl_3$, and Cu_2Cl_2.[2] The leaching is continuous and is stopped after from 4 to 5 hr., when the solution ceases to show a bluish color. The liquor extracts from 75 to 80 per cent of the Cu, weighs 38° Bé., and contains: Cu 3.71, Pb 0.01, Ag 0.005, Bi trace, $(FeAl)_2O_3$ 0.29, ZnO 4.97, MnO 0.58, (NiCo)O 0.04, CaO trace, MgO 0.27, Alk. 10.60, Cl 12.56, SO_3 8.95, As and Sb 0.32 per cent. As in time it becomes overcharged with salts, it is concentrated by storing in vats in the open, and the crystallization of salts assisted by introducing brush wood.

[1] With mechanical furnaces more $CuCl_2$ is produced than with hand-raked furnaces as long as the temperature remains the same, so that the water leach may extract as much as 85 per cent of the Cu.

[2] As the presence of Cu_2Cl_2 interferes with the precipitation of Ag by KI (Claudet method), it would be necessary to leach first with H_2O and then with mother liquor, if the Ag was to be thus recovered.

The tower liquor which is subsequently used as solvent is run into the ore vat, and remains there until its dissolving power has been used up, which lasts about 4 hr. The last solvent is boiling dilute H_2SO_4 of 8° Bé.; it remains in contact with the ore for 48 hr. The time for treatment of a charge is about three and one-half days.

214. Clarifying of Copper Liquor.—The rich copper liquor from the leaching tanks, above 18° Bé., is likely to be cloudy from fine ore, $PbSO_4$, etc. The $PbSO_4$ has been found to carry down considerable Au, assaying as much as 5 oz. per ton. The liquor is run into tarred wooden settling tanks, usually 12 ft. square and 6 ft. deep, which have a discharge through a perforated wooden block, 6 by 6 in., placed in the side near the bottom. The number of settling tanks is the same as that of the leaching tanks. Settling takes several hours. In front of a row of tanks is a single launder to receive the clarified liquor.

215. Precipitation of Copper by Iron.—A precipitating vat, made of wood and tarred, is 12 ft. square and 6 ft. deep. It has a false bottom of slats 2 ft. above the true bottom, to furnish a support for the iron, and a space for the collection of the cement copper; it is provided with a pipe for heating the liquor by means of live steam, and has a discharge for liquor through a 6-in. wooden block closed by means of a plug. There are half as many precipitating tanks as there are leaching tanks. Each tank is filled loosely with scrap iron, the copper liquor is run in, and the steam turned on to bring it to a boil. Tanks are kept covered with boards to diminish the loss of heat and to retard the formation of oxychlorides, which increase the consumption of Fe. Precipitation may last only 12 hr., but usually takes a day and even longer; it is finished if a bright iron rod does not become tarnished with Cu. When this is the case, the mother liquor is run off through settling tanks, sometimes also through a horsehair filter, to settle and catch particles of float copper. For the sake of safety, the liquors from a row of vats are passed through auxiliary precipitating tanks placed in series; in the overflow of the last is suspended a bright iron rod. There is consumed 1 lb. Fe for 1 lb. Cu, the low consumption being due to the Cu_2Cl_2 present. With rich solutions, a clean-up is made once a week; with poor solutions once a month. In both cases the mud is passed over 8-mesh copper screens to remove particles of Fe.

216. Washing and Refining of Cement Copper.—The cement copper is transferred from the precipitating tanks to washing vats, where it is freed from all chloride liquor. Careful washing is essential, as in the subsequent smelting, any Cl would cause a considerable loss of Cu by volatilization. Analyses of cement copper are given in Table LXXXIX.

The washed cement copper is partly dried, compressed, and bagged if it is to be shipped. If it is to be treated at the leaching plant, it is charged more or less moist (8 to 10 per cent H_2O) into a reverberatory furnace either by itself or with the addition of pure white metal, and smelted for blister copper; if it is not sufficiently pure for this purpose, it is added to a matte charge.

TABLE LXXXIX.—ANALYSES OF CEMENT COPPER

	England	Oker, Germany	Hemixen, Belgium	Washed	Natrona, Pa.
Cu	72.50	77.45	75.07	95.93	90
Pb	2.60	0.63	.....	0.05	
Ag	0.046	0.10	.....	.....	35 oz.
Bi	.....	0.006	.....	.....	Au 0.15 oz.
As	0.306	0.04	.....	0.14	
Sb	.....	0.15	.....	0.35	
Fe_2O_3	4.41	6.72	.....	.....	
FeO	.....	.....	5.80	2.55 Fe	
Al_2O_3	.....	0.99	2.36	.....	
Zn	.....	1.02	.....	.....	
Mn	.....	0.02	0.99	.....	
NiCo	.....	0.03	.....	0.17	
CaO	.....	0.10	1.28	0.10	
MgO+Alk	.....	2.71	.....	.....	
NaCl	.....	.....	0.55	.....	
Na_2SO_4	.....	.....	2.04	.....	
SO_3	.....	4.58	.....	0.16	
Cl	.....	1.19	.....	0.21	
Insol. and Loss	.....	0.61	4.10	.....	
H_2O	.....	3.654	8.00	.....	
Reference	Lunge	Bräuning	Egleston	Stahl, Dissertation, 1886	Clemmer

217. Disposition of Residue from Leaching, and of Waste Liquor.—The residue of the leaching vat is a rich iron ore with 90 ± per cent Fe_2O_3, usually low in P and S if it has been well washed. It goes by the name of Purple Ore or Blue Billy. It is removed from the vats by shoveling onto a slightly inclined platform back of the leaching vats, *i.e.*, on the side opposite the clarifying tanks. The platform has discharge openings through which the ore is transferred into cars after the water has been drained off. Table XC gives a few analyses.

TABLE XC.—ANALYSES OF PURPLE ORE

	England		Oker, Germany
Fe_2O_3	90.61	95.10	79
Al_2O_3	.....	.....	3
Cu	0.15	0.18	0.3 to 0.8
S	0.08	0.07	
P			
$PbSO_4$	1.46	1.29	
$CaSO_4$	0.37	0.49	
CaO	.....	.....	2.5
MgO + alk	.....	.....	1.0
Na_2SO_4	0.37	0.29	
NaCl	0.28		
H_2SO_4	.....	.....	5.5
Insoluble	6.30	2.13	6
Reference	Lunge	Lunge	Bräuning

Purple ore is used as a flux for siliceous lead ores, as a fettling for puddling furnaces, or as an iron ore for blast furnaces. In the last case[1] it is usually first converted into lump form by briquetting and sintering (Gröndall process), by nodulizing, or by mixing with fuel and agglomerating in a Dwight-Lloyd machine whereby the S content is reduced to traces. The disposition of waste liquor has to be considered in the location of a plant, as the pollution of rivers may cause serious inconveniences. Attempts have been made to recover the Na_2SO_4, but they have not been successful (Lunge).

218. Precipitation of Copper Independently of Silver and Gold.[2]—Several processes have been devised for the separate recovery of the small amounts of Ag and Au present in the $CuCl_2$ solution by precipitating with suitable reagents. Since the perfection of the electrolytic refining of copper these processes have lost their former importance.

1. *The Claudet Process.*—This process is in use (1913) in many European plants, but has been given up in this country, as the precipitation was found to be incomplete, leaving, according to Clemmer, 5 oz. Ag per ton in the copper, and expensive when compared with the price received by the electrolytic refiner who pays for 95+ per cent of the silver content.

The process consists of precipitating Ag (Au) by ZnI_2 as AgI, and decomposing the separated precipitate with Zn and HCl, whereby the ZnI_2 is regenerated. The Ag content in the clarified copper liquor from the water leaches in the English method of leaching, or from the final liquor wash in the Oker method, is determined, the solution drawn off into a precipitating vat, and diluted with 10 per cent H_2O containing an excess of ZnI_2 over that required for the Ag, as some Pb is precipitated as PbI_2. The dilution causes some $PbSO_4$ and Cu_2Cl_2 to separate. The presence of Cu_2Cl_2 interferes with the complete precipitation of the Ag. The AgI_2 settles in about 48 hr.; this time has been reduced to 24 hr. at Oker by the addition of a coagulant of glue (60 g. glue + 10 liters H_2O) and tannin (30 to 40 liters) obtained by boiling white-oak bark. The precipitate consists principally of AgI_2, PbI_2, and $PbSO_4$. It is removed from the vat when a sufficient amount has been accumulated, washed, and treated wit Zn and HCl. The loss in I is made good by addition of KI. Metallic sponge obtained from its decomposition contained Ag 5.95, Au 0.06, Pb 62.28, Cu 0.60, ZnO 15.46, Fe_2O_3 1.50, CaO 1.10, SO_3 7.68, Insol. 1.75 per cent (Lunge).

2. *The Mayer Process.*—Here Ag is precipitated with NaI, and the AgI treated with Na_2S, forming Ag_2S and NaI. The precipitate at Åtvidaberg contained 10.5 per cent Ag, that of Königshütte 25.30 per cent.

3. *The Gibbs Process.*—By fractional precipitation with H_2S, nearly all the Ag is thrown down as Ag_2S with about 6 per cent of the Cu, furnishing a black slime assaying about 200 oz. Ag per ton; the Cu, precipitated later with Fe, assays about 3 oz. Ag per ton.

4. *The Snelus Process.*—Iron sponge is blown into the solution to precipitate about 19 per cent of the Cu, which carries down about 80 per cent of the Ag.

[1] HOFMAN, "General Metallurgy," 1913, p. 629, 644.

[2] STAHL, *Berg. Hüttenm. Z.*, 1892, LI, 443.

5. *The Jardine and Chadwick Process.*—Dilution of the Cu liquor is to cause falling out of AgCl, and addition of $Pb(C_2H_3O_2)_2 + 3H_2O$ to form $PbSO_4$, which quickly carries down most of the AgCl.

219. Results and Cost.—The yield in Cu is from 95 to 98 per cent; that of Ag (Au) is about 75 per cent with ores assaying from 0.75 to 1.2 oz. Ag and 0.02 oz. Au per ton. The cost of working a ton of burned Spanish pyrite (in 1899), at Natrona, Pa., with a plant treating 200 tons charge per day with hand-rabbled muffle furnaces[1] was as follows: labor, 80 men at $1.50 to $2.50, $134.75; unloading cinder and salt, and loading purple ore, $35; 21 tons of salt at $3, $63; pyrite fines, $7; 20 tons of coal at $1, $20; 5.5 tons of iron scrap at $7, $38.50; repairs, depreciations, management, etc., $40; total $338.25, or $1.87 per ton burned pyrite and $1.69 per ton mixture. As the 14 furnaces of the plant require 28 men at $1.75 = $49, the cost of treatment with a mechanical furnace ought to be considerably lower; the amount of salt required ought also to be reduced on account of the more uniform stirring.

The cost of treatment in 1913 (including grinding, furnacing, leaching, precipitating with recovery of a portion of the gold, silver, and lead values), using an eight-hearth furnace (Fig. 233) and recovering 47 lb. copper was, according to the best European practice, substituting American prices for labor: labor in process $0.67; labor in repairs $0.11; materials in process $0.70; materials in repairs $0.20; total $1.68. The cost of materials used in the process (70 cts.) is made up as follows: fuel for boilers 8 cts.; fuel for furnacing 8 cts. (4 per cent coal[2] on burned pyrite at $2.16 per ton); salt 38 cts.; iron 10 cts.; miscellaneous 6 cts. The cost of furnacing alone is $0.25 (labor 13 cts., fuel 8 cts., repairs 4 cts.).

220. Longmaid-Henderson Process Following H_2SO_4 Leach.—Addicks[3] proposes a process for treating copper concentrates by first roasting in a standard multiple-hearth roaster under conditions which will give maximum copper solubility and minimum iron solubility in H_2SO_4 and treating the tails by the Longmaid-Henderson process. The H_2SO_4 treatment extracted about 80 per cent of the copper in the material used, while the Longmaid-Henderson process extracted 99 per cent of the remaining copper and 79 per cent of the silver. The copper from the H_2SO_4 solution can be deposited electrically, while that from the chloride solution is recovered as argentiferous copper by cementing on iron. The tests showed an acid consumption amounting to 2.28 lb. per pound of copper extracted, using solutions running 5.6 per cent free acid.

B. LEACHING COPPER MATTE

221. Leaching of Copper Matte in General.—Before the general introduction of the copper converter and the electrolytic refining of copper, the precious metals were frequently recovered from copper matte by leaching methods. These methods are of little or no importance as such today, but they contained certain

[1] CLEMMER, *Mineral Ind.*, 1899, VIII, 202.

[2] Some European plants use only 2 per cent coal.

[3] *Trans. A. I. M. E.*, 1916, LV, 856.

interesting metallurgical features which warrant a brief description. The first edition of this book gives further details.

222. The Augustin Process.[1]—The process has been used for ore, matte, speise, and metallic copper (§227). The leading steps in the process with copper matte are oxidizing roast to produce CuO and Ag_2SO_4; chloridizing roast to convert Ag_2SO_4 into AgCl; solution of AgCl in hot brine; precipitation of Ag by means of Cu; recovery of Cu by means of Fe.

223. The Ziervogel Process in General.[2]—This process was invented in 1840, introduced at Mansfeld in 1844, and is carried on there at present (1913). Pulverized silver-bearing high-grade copper matte is subjected to a sulphatizing roast to form CuO, Fe_2O_3, and Ag_2SO_4; the Ag_2SO_4 is dissolved with hot H_2O acidulated with H_2SO_4, and precipitated from its solution with granulated or sheet copper. The resulting mother liquor is used again as solvent for Ag_2SO_4 and its Cu recovered at intervals by means of Fe. The leached CuO, containing some Fe_2O_3, and any precipitated Cu are smelted in a reverberatory furnace for blister copper.

224. The Freiberg Vitriolization Process.[3]—This process is now of only historic importance, but is worthy of brief attention. The aim is to dissolve with hot dilute H_2SO_4 the CuO from high-grade dead-roasted argentiferous matte and convert it into marketable blue vitriol; the insoluble silver-bearing residue is added to a lead blast-furnace charge. The process is based upon the solubility of CuO and the relative insolubility of Ag(Au) in dilute H_2SO_4. If dead-roasted copper matte is treated with hot dilute H_2SO_4, CuO and ZnO will first go into solution, then follow Fe_2O_3, NiO, and CoO, and, to a very small extent, Ag. Any Cu_2O present is decomposed, $Cu_2O + H_2SO_4 = Cu + CuSO_4 + H_2O$. The Cu will precipitate some Ag that may have been dissolved, but the dead-roast is usually prolonged sufficiently to convert all Cu_2O into

[1] GRÜTZNER, A., "Die Augustin'sche Silberextraction in ihrer Anwendung auf Hüttenproducte und Erze," Vieweg, Brunswick, 1851; KERL, CROOKES and RÖHRIG, "Practical Treatise on Metallurgy," Longmans, Green & Co., London, 1868, I, 368; RIVOT, L. E., "Traité de Métallurgie," Dunod, Paris, 1871, I, 405; HOWE, "Production Gold and Silver in the U. S., 1883, p. 764; BALLING, C. A. M., "Metallhüttenkunde," Springer, Berlin, 1885, p. 355; HAHN, *Trans. A. I. M. E.*, 1873–74, II, 99; *Eng. Mining J.*, 1898, LXV, 434; GRÜTZNER, *loc. cit.*; KERL, CROOKES and RÖHRIG, *loc. cit.*; EGLESTON, *Trans. A. I. M. E.*, 1875–76, IV, 295; KMVABARA, *School Mines Quart.*, 1893–94, XV, 355.

[2] STEINBECK, *Z. Berg. Hüttenm. Sal. Wesen i. Pr.*, 1863, XI, 95; RIVOT, L. E., "Traité de Métallurgie," 1871, I, 425; HOWE, "Production Gold and Silver in the U. S.," 1883, p. 753; BRADFORD, *Trans. A. I. M. E.*, 1903, XXXIII, 50; At Mansfeld: LEUSCHNER, *Z. Berg. Hüttenm. Sal. Wesen i. Pr.*, 1869, XVII, 135; *Berg. Hüttenm. Z.*, 1869, XXIX, 432; Report of 1881, *op. cit.*, 1881, XL, 430; Report of 1904, *Metallurgie*, 1904, I, 229; Report of 1907, *op. cit.*, 1908, V, 27. EGLESTON, *School Mines Quart.*, 1890–91, XII, 207; Private notes, 1911; Private communication by R. Franke, 1913; In Colorado: EGLESTON, *Trans. A. I. M. E.*, 1876, IV, 276; PEARCE, *op. cit.*, 1889–90, XVIII, 55; PEARCE, *op. cit.*, 1889–90, XVIII, 67.

[3] KUHLEMANN, *Z. Berg. Hüttenm. Sal. Wesen i. Pr.*, 1871, XIX, 180; *Berg. Hüttenm. Z.*, 1872, XXXI, 76; CAPACCI, *Rev. Un. Min.*, 1881, IX, 276; HOWE, "Production Gold and Silver in the U. S.," 1883, 790; DOERR, *Mineral Ind.*, 1896, V, 225; GIGNOUX (Lyon Mill, Dayton, Nev.), *Min. Res. U. S.*, 1882, 297; RICKARD, *Mineral Ind.*, 1908, XVII, 588, Selby Lead Works, San Francisco, Cal.; *Fifth Internat. Congress Appl. Chem.*, Berlin, 1903, I, 597, *Eng. Mining J.*, 1903, LXXVI, 358; HOFMAN, "Lead," 1898, p. 373.

CuO. The PbO present is changed into $PbSO_4$. Arsenates and antimonates will be partly decomposed, the former being more soluble than the latter. The residue will contain Ag(Au), $PbSO_4$, and other insoluble sulphates.

The process was developed at Freiberg, Saxony; it has been replaced there by the vitriolization of metallic Cu; in the United States it was for a time in operation at the Selby Lead Works, San Francisco, Cal., where blue vitriol was produced from matte.

225. The Hofmann Vitriolization Process.[1]—The process developed and put into operation at the works of the Kansas City Smelting and Refining Co.

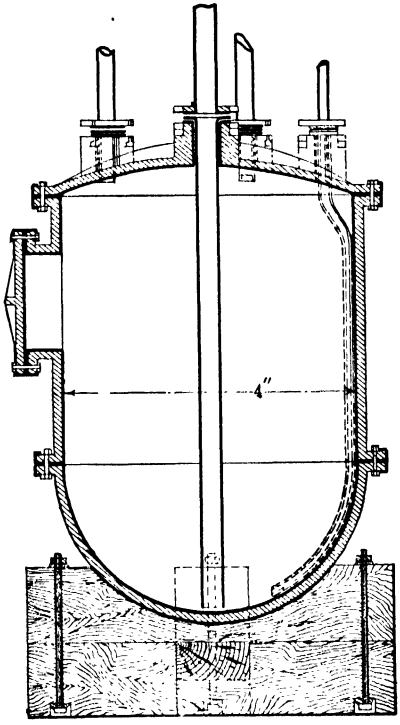

Section on Line *A B*

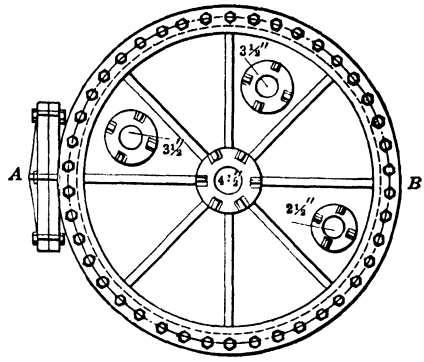

Plan showing Size of Openings

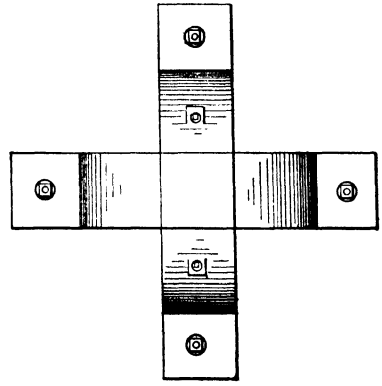

Plan of Supporting Frame

FIGS. 238–239.—Cast-iron pressure-tank.

Argentine, Kan. (now dismantled), resembles in its general features the Freiberg vitriolization, in that CuO is extracted from roasted ore by means of H_2SO_4 and crystallized as $CuSO_4$ + aq.; it differs from it in that any Fe present is precipitated as Fe_2O_3, and this permits the use of matte rich in Fe as raw material. The refining of the liquor and crystallization of $CuSO_4$ in the Hofmann process are of sufficient general importance to warrant a more detailed description.

[1] HOFMANN, O., *Mineral Ind.*, 1899, VIII, 189; 1900, IX, 222; 1901, X, 230; "Hydrometallurgy of Silver," McGraw-Hill Book Co., Inc., New York, 1907, p. 259; HESSE, "Works at Predazzo," *Metallurgie*, 1909, VI, 580 (drawings).

Refining of Copper Liquor.—The finished charge is drawn off into an upright pressure tank and forced with 40 to 50 lb. pressure through a filter press. The cast-iron pressure tank is shown in Figs. 238 to 239; it is lined with lead, and the latter protected from wear by wood. In filling the tank, some compressed air is admitted with the pulp in order to prevent the latter from packing. The filter press has hard-wood frames and plates 4 ft. square, is 25 ft. long, and holds 5 tons of residue. The filtrate flows into a collection vat, from which it is elevated by means of a pressure tank to the top of the refining tower, shown in Fig. 240, for the precipitation of Fe_2O_3, As, Sb, Bi, Ni, Co . . . This purification is accomplished by adding CuO (really roasted copper matte) to the hot neutral solution of $CuSO_4$, through which is forced at the same time finely divided air. The main reaction taking place may be expressed by $FeSO_4$ + dissolved impurity + O + CuO = Fe_2O_3 + precipitated impurity + $2CuSO_4$; some basic ferric and cupric salts are formed, which remain in the residue. The latter is treated with dilute (2.5 to 3 per cent) H_2SO_4, which dissolves only the Cu, and is filtered. The filtrate goes to the collection vat for the refining tower, the residue is worked with the residue of the solution tank. The refining tower (Fig. 240) is built of 4-in. staves of California redwood well bound by iron rods; it stands on a trestle and carries timbers anchored to the foundation by heavy guide rods to guard against oscillation likely to be caused by the compressed air. The 4-in. air-inlet pipe is made of lead. Its horizontal arm enters the tower 18 in. above the bottom and is connected with a radial 6-in. lead pipe closed at the opposite end and perforated on the lower side. The vertical arm reaches to the top of the tower where it is joined through a valve to an iron pipe reaching down to the receiver of the air compressor. This arrangement prevents the solution from running into the compressor when the latter is not in operation. Opposite the air inlet is a 1-in. steam pipe held in the cast-iron door of the manhole; at right angles to it is the 4-in. discharge pipe provided with a hard-lead valve. On the top of the tower are a 4-in. inlet for solution and an 8-in. outlet for steam and air (not shown). The latter enters a lead-lined box with zig-zag shelves to precipitate and carry down particles of liquor entrained by the air. The upper third of the vat contains glass gages to watch the filling.

In operating, the tower is charged with 5,000 gal. liquor, steam is turned on as well as some air. The latter makes the heating proceed uniformly and causes some basic ferric sulphate (not over 50 per cent of the Fe present) to fall out. When the temperature of the liquor has reached 70 to 80° C., more air is admitted, and some roasted matte fed. After from 3 to 4 hr., all the impurities will have been precipitated. The progress of the precipitation is followed by testing for Fe samples taken from a cock in the side wall. As soon as the solution is freed from Fe, all the other impurities will have been eliminated, as they fall out of solution before the Fe.

Evaporation and Crystallization.—The refined Cu liquor, of 24 to 26° Bé., and free from Ag (any dissolved Ag_2SO_4 having been precipitated by $FeSO_4$), goes to storage tanks. These supply the evaporators, where it is brought up to about 30° Bé. and sent to the crystallizing plant.

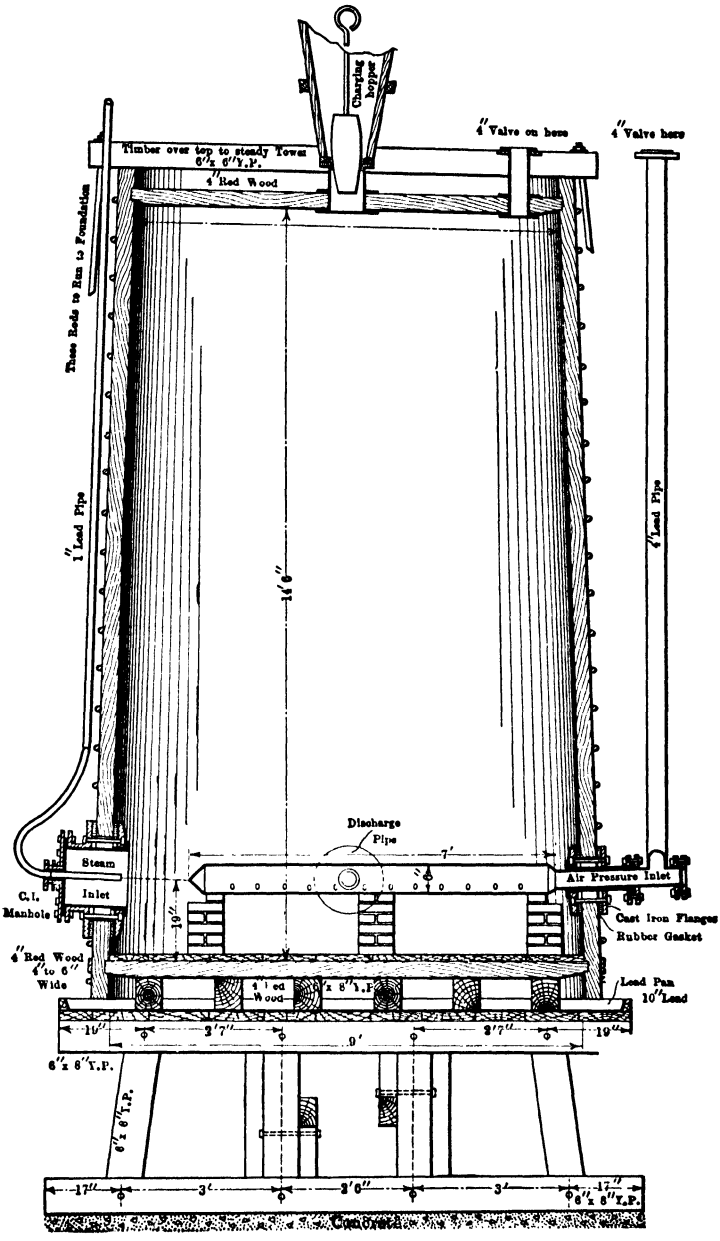

FIG. 240.—Refining tower.

The crystallization plant is shown in Fig. 241. There are two rows of tanks, between which is a traveling rotable belt elevator with copper cups, which raises the crystals, shoveled into the boot, and delivers them to the hopper. Here they drain and are discharged into the car below; the mother liquor collects in channels on the sides of the track and flows to a collecting pit.

The tanks are built of two 9-in. courses of acid-proof brick separated by a 2-in. space filled with a mixture of asphalt and sand. Each tank is 6 ft. deep and has a capacity of 720 cu. ft.; on top is a wooden frame carrying strips of lead 5 ft. long; crystals form on these as well as on the sides and the bottom of the vat. Crystallization requires seven days; when finished, the mother liquor is drawn off through brass tubes into the side launders and flows to the collecting pit, whence it is elevated by pressure tanks to storage vats, to be used again in the solution tank and refining tower.

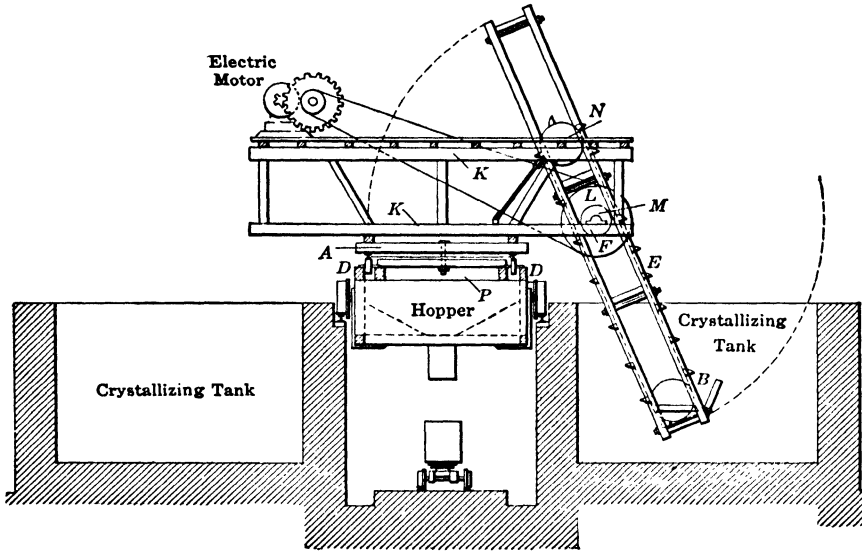

FIG. 241.—Crystallization plant.

K, frame with turntable *A*, held by pin *P*, and circular track; *E*, belt elevator swinging on shaft *F*; *L* and *M*, pulleys for driving elevator pulley *N*; *B*, boot of elevator.

The frame with strips of lead and adhering crystals is raised by block and tackle; the crystals are knocked off and go with the side and bottom crystals to the elevator. The car receiving the crystals delivers them to a bin, whence they are fed to a crusher consisting of a fast-moving roll and a toothed stationary plate. The broken crystals are transferred to an inclined trough, washed with water, and sized in two hexagonal drums with brass shaft and arms and maple sides having openings 0.375 and 0.125 in. in diameter. The undersize crystals with the wash water go to dissolving tanks, the oversize are dried in a brass centrifugal machine. The crystals from the neutral solution retain their bluish color longer than do those from a slightly acid solution.

In order to reduce as much as possible the formation of small crystals, a tank filled with concentrated copper liquor is covered with a layer of water

spread about 1 in. thick from a flat nozzle. This prevents the formation of small crystals on the surface (*salting out*) which sink to the bottom as soon as formed, a phenomenon caused by evaporation of the liquor on the surface.

The plant at Argentine with a daily capacity of 60 tons of blue vitriol had 3 Pearce furnaces, 8 solution tanks, 1 pressure tank, 5 filter presses with storage tanks, 8 refining towers, 11 evaporators for 90,000 gal. refined copper liquor per day, and 112 crystallizing vats, each of 720 cu. ft. capacity.

C. LEACHING METALLIC COPPER

226. Leaching of Metallic Copper in General.—The leaching of metallic Cu with H_2SO_4 has many points in common with the similar treatment of copper matte. Leaching Cu has been replaced by electrolysis, at least with pure metal.

Two process have to be considered, the obsolete Augustin, and the Harz vitriolization, which has retained its place as an independent process with impure Cu, and as an auxiliary process in the preparation of the blue vitriol electrolyte in the electrolytic refining of Cu.

227. The Augustin Process.[1]—The underlying principles are the same as those for the treatment of copper matte, except that metallic copper is subjected to a chloridizing roast.

228. The Vitriolization Process.[2]—The process in its present form was put into operation in 1858 at the Copper Smelter of Oker, Harz Mountains, and often goes by the name of Harz vitriolization. It is based upon the solubility of Cu in hot dilute H_2SO_4 in the presence of air, and the relative insolubility of Ag, Au, Pb, As, Sb, etc. The leading steps are refining and granulating silver-bearing impure metallic Cu, dissolving the Cu granules in hot dilute H_2SO_4 in the presence of air, separating the Cu solution from the residue, crystallizing the $CuSO_4$ + aq. and converting it into marketable blue vitriol, and working up the insoluble residue.

1. *Refining and Granulating Black Copper.*—Black copper contains 90± per cent Cu. The aim in refining is to scorify Pb, Fe, Ni, Co, Zn, etc., so as to prevent their being attacked or dissolved by the acid, as, when crystallizing with the blue vitriol, they would impair its quality. The slagging of Pb, Fe, and Zn is readily accomplished, that of Ni, Co, and Bi (§168) less so. According to Egleston[3] the scorification of Ni(Co) is greatest at the period when Cu gives off the last of its S, hence some of the Ni in Cu can be concentrated in a small amount of slag. The curve of Wanjukow (Fig. 210) also

[1] AUGUSTIN, *op. cit.*; EGLESTON, *Trans. A. I. M. E.*, 1876, IV, 295; CAPACCI, *Rev. Un. Min.*, 1881, X, 201; HOWE, "Production Gold and Silver in the U. S.," 1883, p. 764; MARKUS, *Berg. Hüttenm. Z.*, 1852, XI, 5; 1855, XIV, 64; KERPELY, *op. cit.*, 1871, XXX, 190, 285; WAGNER, *Oesterr. Z. Berg. Hüttenw.*, 1873, XXI, 319; BALLING, C. A. M., "Metallhüttenkunde," Springer, Berlin, 1885, p. 358.

[2] KUHLEMANN, *Z. Berg. Hüttenw. Sal. Wesen. i. Pr.*, 1871, XIX, 180; BRÄUNING, *op. cit.*, 1877, XXV, 166; HOWE, "Production Gold and Silver in the U. S.," 1883, p. 790; EGLESTON, *op. cit.*, 1884, p. 600; CLEMENT, *Mineral Ind.*, 1900, IX, 278.

[3] *Trans. A. I. M. E.*, 1882, X, 49.

shows that the elimination of Ni is rapid during the boiling period. A similar observation was made by Kuhlemann.[1]

The mode of operating is the same as in refining copper (§163 and following).

An analysis of granules from Altenau[2] gave Cu 95.00, Pb 2.71, Fe 0.07, Ni-Co-Zn 0.048, Sb 1.53, As trace, Ag 0.30 per cent. Granules ought to be flat, 1.2 in. in diameter, and have thin walls 0.02 in. thick; they resemble somewhat flaked breakfast food; frequently they are rounded. The form of the granule depends upon the pitch of the Cu and the granulation proper. According to Egleston,[3] the Cu ought to be granulated at the end of the boiling period, *i.e.*, when it has absorbed some Cu_2O, but has not yet reached the stage of set copper. At Oker[4] the metal is tapped before it has ceased boiling; at Freiberg[5] the same is the case, the reason being that the liberation of SO_2 causes the walls to become thin.

The progress made in the refining of the black copper is carefully regulated toward the end in order to obtain just the pitch which is correct for granulating, as with the right pitch the granulation is simple and effective, while with a wrong pitch the granules are likely to be spherical and solid, and violent explosions are common. An excess of Cu_2S in the bath is indicated by films of Cu_2S flitting over the surface of the metal which has been freed from slag, and by the swelling of the slag when this is being skimmed. The excess is removed by charging small amounts of roasted white metal; or by rabbling or blowing. An excess of Cu_2O is indicated by the brightness of the surface of the Cu and the quickness with which the skimmed slag solidifies; a stick of sulphur thrown on the bath burns with the evolution of the brownish fumes of S vapor. The excess of Cu_2O is removed by charging small amounts of white metal or of stick sulphur. A granulated sample of Cu of the right pitch is pale red and shows no blackish specks, which indicate Cu_2S; purplish granules indicate an excess of Cu_2O.

Beside the pitch, the temperature of the copper is of importance; the latter ought to be as low as will permit the metal to run in a thin stream from the taphole. The lower the temperature, the more effective is the expulsion of SO_2.

For granulating, the copper is run from the furnace in a thin stream into a deep covered water tank, of wood, iron, or of brick, well cemented, let into the ground, and provided with a steady inflow of cold water. On leaving the spout the copper either meets a strong jet of water, which scatters the metal and thus assists in the forming of flat granules, or it drops onto a pole of green wood, which breaks up the stream; in the latter case the basin is filled with hot water (Freiberg). The basin must be deep. Granulating with a jet of water requires cold water in order that the granules shall have become solid before they reach the bottom; if this is not the case, there is danger of serious explosions, and of the granules adhering to one another and forming lumps. The granulating

[1] *Loc. cit.*, p. 205.

[2] KUHLEMANN, *loc. cit.*, p. 203.

[3] *Trans. A. I. M. E.*, 1875–76, IV, 296.

[4] BRÄUNING, *loc. cit.*, p. 163.

[5] Private notes.

basin is always covered, as explosions of more or less violence are always likely to occur. The basin must be deep enough so as not to be more than half filled with granules by a furnace charge. At Oker about 3 tons of copper are granulated in an oval wooden tank 8 ft. 2½ in. by 4 ft. 11 in. and 4 ft. 7 in. deep; at Frieberg about 10 tons in a circular boiler-iron tank 6 ft. 10 in. in diameter and 9 ft. 10 in. deep. In the tank is placed a basket connected by chain or wire rope with an overhead traveling pulley to remove the granules and transfer them to the solution tank.

2. *Dissolving of Granules.*—The main reaction taking place in the solution of the copper is $Cu + H_2SO_4 + O = CuSO_4 + H_2O$; a secondary reaction is $2CuSO_4 + 2Cu = 2Cu_2SO_4$ and $Cu_2SO_4 + H_2SO_4 + O = 2CuSO_4 + H_2O$, *i.e.*, some of the $CuSO_4$ formed by the main reaction acts upon Cu and is reduced to Cu_2SO_4, but the latter is oxidized again to $CuSO_4$ in the presence of H_2SO_4 and O. Thus the Cu is dissolved by the direct action of H_2SO_4 and O, and the indirect action of $CuSO_4$.

The behavior of foreign metals with hot dilute H_2SO_4 is similar to that in treating roasted matte. There will go into solution Cu, Zn, Fe, Ni, Co, and small amounts of As_2O_5 and Sb_2O_5; the residue will contain Ag, Au, $PbSO_4$, most of the As_2O_5 and Sb_2O_5, some $Pb_3As_2O_8$, and basic sulphates of Sb, Sn, and Bi. The manner of operating varies considerably.

3. *Crystallization.*—Trade demands that the crystals of blue vitriol shall be pure, large, and of a correct color. The conditions are fulfilled by having a clean and clear solution of the right concentration (28 to 29° Bé.) with not over 1 per cent free acid, by a slow crystallization (six to eight days) in covered tanks in which are suspended strips of lead from cross-bars, by freeing the crystals from mother liquor through washing, and by drying the washed crystals. In allowing blue vitriol to crystallize out of solution in the usual way, large crystals form on the lead strips (similar to rock candy on threads), smaller crystals on the sides of the tank, and the smallest on the floor. As the last bring only a low price, it is important to hinder their formation as much as possible; which is accomplished by the method of O. Hofmann given in §225. Usually the bottom crystals are redissolved and recrystallized.

4. *Working-up of Insoluble Residue.*—This is briquetted and smelted in a suitable furnace for lead bullion or copper matte as the conditions may require.

229. Examples of Vitriolization.—A description of plants in the Harz Mountains has been given by Bräuning[1] and by Egleston.[2] Plants in the United States are discussed by Clemmer.[3]

[1] *Z. Berg. Hüttenm. Sal. Wesen. i. Pr.*, 1877, XXV, 165.

[2] "Production of Gold and Silver in the U. S.," 1884, p. 660.

[3] *Mineral Ind.*, 1900, IX, 277.

CHAPTER IX

ELECTROLYSIS OF COPPER

230. In General.—The raw materials from which Cu might be extracted by means of an electrolytic process are ore, matte, speise, and, lastly, metal which is to be refined to a higher degree than is practicable by dry methods.

231. Electrolysis of Ore.—All direct processes have been failures. A direct process is one in which the ore forms the anode. Such a treatment cannot be successful. An indirect process is one in which the raw or roasted ore is treated with a solvent, and the solution electrolyzed, not in contact with ore. Some of these have already been discussed.

232. Electrolysis of Copper Matte.[1]—After the electrolytic refining of metallic copper had proved a commercial success, it seemed natural to go one step back and attempt the electrolysis of copper matte in a bath of acidulated blue vitriol with cast matte as anode and sheet copper as cathode. This process was patented by Marchese in 1882[2] and carried out on a large scale with 30 per cent matte at the Casarza works near Sestri-Levante, Genoa,[3] and proved a failure. Later it was taken up again at Stolberg, Westphalia,[4] with matte of 15 to 16 per cent Cu, but proved again to be unsuccessful. It was held that the matte would be decomposed in part by electrolysis, in part by the $Fe_2(SO_4)_3$, formed in the bath, and that a potential of about 1 volt would be sufficient for the work. The process failed; because the e.m.f. required reached 5 volts; because the anode became coated with non-conducting matter (S); because decomposition was unequal and disintegration of the anodes followed; because more Cu plated out than went into solution and the electrolyte was enriched in $FeSO_4$, which offered a greater resistance than $CuSO_4$ and required frequent renewal of the bath; because the character of the deposited Cu was inferior; and because the deposited Cu was redissolved by the $Fe_2(SO_4)_3$ formed.

In order to make electrolysis of matte in aqueous solution successful, it is necessary that the matte be nearly pure Cu_2S, which leaves behind only a small amount of residue (S), and at the same time will not contaminate the electrolyte with impurities (Fe). This has been done at Mansfeld, Germany, with the Borchers-Franke-Günther process.[5] The matte with Cu 72 to 76 per cent is

[1] BORCHERS and MCMILLAN, *op. cit.*, p. 247.

[2] *Rev. Un. Min.*, 1883, XIV, 331; 1884, XV, 668, 1885, XVII, 563.

[3] BADIA, *La lumière électrique*, transl. in *Sci. Am. Suppl.*, 1885, XIX, 7623, 7646, Nos. 478 and 479; also *Berg. Hüttenm. Z.*, 1885, XLIV, 330; *Eng. Mining J.*, 1885, XL, 21; ZOPETTI, *Il Politecnico*, Nov. and Dec., 1885, transl. in *Rev. Un. Min.*, 1886, XIX, 197; XX, 94; also *Berg. Hüttenm. Z.*, 1886, XLV, 207, 221, 538.

[4] COHEN, *Berg. Hüttenm. Z.*, 1888, XLVII, 406; 1894, LIII, 328; *Z. Elektrochem.*, 1894, p. 50.

[5] WAGNER and PRIMROSE, *Eng. Mining J.*, 1907, LXXXIV, 673; Editor, *Metallurgie*, 1908, V, 29; BORCHERS, "Metallurgy of Copper."

cast into anodes, 40 in. square by 2 in. thick, which have to be annealed to prevent their cracking. They are suspended in parallel alternating with Cu cathode sheets in the usual wooden lead-lined electrolyzing tank for metallic copper, by T-shaped pieces of Cu embedded in the matte and tinned at the ends. The electrolyte is an acidulated solution of blue vitriol held at 70° C., circulated and aerated; the current density 7 amp. per square foot at a pressure of 0.75 volt. The Cu is dissolved and goes to the cathode, S and the other insoluble matter go into the anode mud; if the current density is too low, only half of the Cu goes into solution. The anode has to be removed before it becomes too thin and begins to crumble. The mud is filter-pressed, treated with a hot solution of acetylene tetrachloride to dissolve the S, which separates upon cooling, and then worked by the Ziervogel process (§221) to recover the Ag. While metallurgically the process was successful, the cost of treatment was too high; the process was therefore abandoned.

233. Electrolysis of Speise.—Considering that all attempts at the electrolysis of ordinary copper matte have been unsuccessful, it is not to be expected that a similar treatment of speise will be anything else but a failure. A process was suggested by André in 1877,[1] but there is no record of anything more.

234. Electrolysis of Metallic Copper in General.[2]—The aim of the electrolytic refining of copper is to produce pure copper from a high-grade blister copper by means of the selective chemical action of the electric current. The current is intended to dissolve copper from the blister copper suspended as anode in a solution of $CuSO_4$ acidulated with H_2SO_4, and to deposit it on a copper cathode. Most of the usual impurities will remain behind and form the anode mud, some will be dissolved and become concentrated in the electrolyte, some may be deposited on the cathode.

The possibility of such a process was proved experimentally in 1847 by von Leuchtenberg, but its industrial applicability was first recognized by Elkington, who patented in 1865 the multiple system of the process, and erected the first successful plant in 1869 at Pembrey, Wales. His example was soon followed by others in England, Germany, and elsewhere. In the United States the Balbach Smelting & Refining Co.[3] in 1883 was the pioneer of the industry,

[1] *Dinglers polytech. J.*, 1879, CCXXX, 281; 1880, CCXXXVI, 415.

[2] ULKE, T., "Modern Electrolytic Copper Refining," John Wiley & Sons, Inc., New York, 1903; BORCHERS, W. and MCMILLAN, W. G., "Electric Smelting and Refining," J. B. Lippincott & Company, Philadelphia, 1904, pp. 187 to 245; BILLITER, J., "Die Electrochemischen Verfahren der Chemischen Grossindustrie," Knapp, Halle, 1909, I, pp. 37 to 139; KELLER, *Mineral Ind.*, 1898, VII, 229; CROCKER-ARENDT, *School Mines Quart.*, 1903, XXV, 3; BANCROFT, *Trans. Am. Electrochem. Soc.*, 1903, IV, 175; *Electrochem. Ind.*, 1902–03, I, 484, 584; *Mines Minerals*, 1903, XXIV, 182, 229; *Eng. Mining J.*, 1903, LXXVI, 740; *Metallurgie*, 1904, I, 670; SCHWAB-BAUM, *J. Phys. Chem.*, 1903, VII, 493; BURGESS, *Trans. Am. Electrochem. Soc.*, 1905, VII, 51; *Electrochem. Metal. Ind.*, 1905, III, 173; ADDICKS, *J. Franklin Inst.*, 1905, CLX, 421; *Mining Sci. Press*, 1906, XCII, 38; BENNETT, "Electrodeposition (plating) of Copper," *Trans. Am. Electrochem. Soc.*, 1913, XXIII, 233; *Met. Chem. Eng.*, 1913, XI, 284; BURNS, *Trans. A. I. M. E.*, 1913, XLVI 703, (Great Falls Plant); Discussion, *Met. Chem. Eng.*, 1913, XI, 670 (MOTHERWELL, BURNS).

[3] ULKE, *Electrochem. Ind.*, 1903, I, 240; Editor, 1904, II, 303.

which has grown to such a degree that in 1912, with the United States furnishing over one-half of the world's copper, 81 per cent of its product was electrolytic copper.

The second form of the process in operation today is the Hayden or Series System introduced in 1886.

Table XCI[1] gives the leading works of the United States and their capacities.

When $CuSO_4$ is dissolved in acidulated water, it is in part dissociated into $Cu^{\cdot\cdot}$ and SO_4'' ions. If the solution is electrolyzed, using copper electrodes, the SO_4'' ions migrate to the anode, are deposited, give up their charges to the

TABLE XCI

	Capacity, millions of pounds	Per cent
Baltimore Copper Co.,[a] Baltimore, Md.	720	27.4
Nichols Copper Co., Laurel Hill, N. Y.	500	18.8
Raritan Copper Works,[b] Perth Amboy, N. J.	480	18.0
A. S. & R. Co., Perth Amboy, N. J.	240	9.0
U. S. Metals Refining Co.,[c] Chrome, N. J.	[d] 240	9.0
Anaconda Copper Mining Co., Great Falls, Mont.	216	8.1
Tacoma Smelting Co.[a], Tacoma, Wash.	204	7.6
Calumet & Hecla Co., Hubbell, Mich.	60	2.1
Total United States	2,660	100.0
Consolidated Mining & Smelting Co., Trail, B. C.	50	
British American Nickel Corporation, Deschenes, Que.	8	

[a] A. S. & R. Co.
[b] Anaconda Copper Mining Co.
[c] American Metal Co.
[d] 50 per cent increase now under construction.

anode, and combine with an equivalent amount of copper. Similarly, the $Cu^{\cdot\cdot}$ ions migrate to the cathode, give up their charges to the cathode, and are deposited as metallic copper.

Another way of expressing the same idea is that the Cu at the anode receives two positive charges ($Cu + 2 + = Cu^{\cdot\cdot}$), is converted into $Cu^{\cdot\cdot}$, and goes into the solution; at the cathode the two positive charges of $Cu^{\cdot\cdot}$ are neutralized by two negative charges of the current ($Cu^{\cdot\cdot} + 2 - = Cu$), and Cu falls out of solution. The second statement shows that in a process with soluble copper electrodes there is only a transference of Cu from anode to cathode, hence there is required little energy or only a small e.m.f. to set in motion, by overcoming the resistance of the solution, large quantities of Cu or SO_4 on their paths to the cathode, or anode. The quantity of current, on the other hand, has to be proportional to the number of $Cu^{\cdot\cdot}$ ions, or, in industrial work, the amperage will be high as compared with the voltage. This regularity of equal solution at anode and deposition at cathode may be disturbed by the formation

[1] Yearbook, Am. Bureau of Metal Statistics, 1922.

of Cu_2O[1] with a low current density, *e.g.*, if below 0.09 amp. per square foot. Here $Cu^{\cdot\cdot}$ ions in the electrolyte, instead of receiving two negative charges ($Cu^{\cdot\cdot} + 2 - = Cu$), receive only a single one ($Cu^{\cdot\cdot} + 1 - = Cu^{\cdot}$), with the result that $CuSO_4$ is reduced only to Cu_2SO_4 instead of to Cu, and $Cu_2SO_4 \rightleftarrows Cu + CuSO_4$ or $2Cu^{\cdot} \rightleftarrows Cu + Cu^{\cdot\cdot}$. This disturbance is favored by a high temperature and a high concentration of the electrolyte. It forms the explanation[2] of the fact that in the electrolysis of copper in $CuSO_4$ solution there is always set free finely divided Cu, which collects in the anode mud. But Cu_2SO_4 may be and is in part converted into $CuSO_4$ by the reaction $Cu_2SO_4 + O + H_2SO_4 = 2CuSO_4 + H_2O$, and this is one of the reasons for the neutralization of the free acid in the electrolyte.

235. Behavior of Individual Impurities.—In industrial electrolysis the anode is not pure copper, but blister copper with 98+ per cent Cu. The behavior of impurities likely to occur in such material was first studied by Kiliani[3] with a solution containing 15 per cent $CuSO_4 + 5$ aq. (= 3.81 per cent Cu) and 5 per cent free H_2SO_4, with a current density of 1.8 amp. per square foot, and an electrode distance of 2 in. Though the composition of this electrolyte resembles that in use at present, the current density is very low; nevertheless the data of Kiliani may serve as a general guide, and will be supplemented by later information.

According to their behavior in general, impurities are conveniently grouped under four heads:

1. Ni, Co, Fe, Mn, Zn, Pb, Sn.
2. Au, Ag, Pt.
3. Cu_2O, Cu_2Se, Cu_2Te, Cu_2S, Ag_2Se, Ag_2Te.
4. As, Sb, Bi.

A general idea of the amounts of most of these elements and compounds present in the anode, and of their distribution in solution and residue after electrolysis, is given in Table XCII.[4]

The impurities of Group 1 are all electropositive to Cu, and will be therefore dissolved before Cu and concentrated in the electrolyte at the expense of Cu. The first five, Ni, Co, Fe, Mn, and Zn, are also attacked chemically by the free H_2SO_4 and therefore neutralize it. The Fe goes into solution as $FeSO_4$, is changed into $Fe_2(SO_4)_3$ by anodic oxidation ($2FeSO_4 + O + H_2SO_4 = Fe_2(SO_4)_3 + H_2O$), and requires an addition of H_2SO_4; the $Fe_2(SO_4)_3$ formed is again reduced to $FeSO_4$ at the cathode by deposited Cu, *viz.*, $Cu + Fe_2(SO_4)_3 = CuSO_4 + 2FeSO_4$. In general, impurities electropositive to Cu offset its chemical corrosion; they may be present in considerable amounts before they affect the cathode deposit. It has been noticed that, if the anode contains much

[1] FÖRSTER and SEIDEL, *Z. Elektrochem.*, 1897, III, 479.

[2] RÖSSLER, *Dinglers polytech. J.*, 1881, CCXLII, 286; WOHLWILL, in BORCHERS and MCMILLAN, *op. cit.*, p. 199; *Z. Elektrochem.*, 1903, IX, 311.

[3] *Berg. Hüttenm. Z.*, 1883, XLII, 235, 250, 375, 399, 423; 1885, XLIV, 249, 261, 273.

[4] KELLER, *Eng. Mining J.*, LXIV, 514; *Mineral Ind.*, 1898, VII, 239.

Ni, the residue formed may assay as high as 10 per cent nickel, the NiO going into the mud, the Ni into the electrolyte.[1]

TABLE XCII.—ANALYSES AND DISTRIBUTIONS OF ANODE IMPURITIES

Element or compound	Example No. 1				Example No. 2			
	Analysis		Distribution in		Analysis		Distribution in	
	Anode, per cent	Residue, per cent	Solution, per cent	Residue, per cent	Anode, per cent	Residue, per cent	Solution, per cent	Residue, per cent
Ag	0.3432	53.894	.....	100	0.3444	55.150	.....	100
Au	0.00173	0.2959	.....	100	.....	0.198	.....	100
Cu	99.30	11.010	99.93	0.07	99.40	13.820	99.914	0.086
Pb	0.0093	0.910	.....	.....	.....	2.070		
Bi	0.0320	3.930	21.78	78.22	0.0035	0.340	39.29	60.71
Sb	0.0651	6.250	38.86	61.14	0.0510	2.440	70.10	29.90
As	0.0586	2.107	77.10	22.90	0.0180	1.090	62.16	37.84
Se	0.0025	0.394	.....	100	0.0045	0.718	.....	100
Te	0.0075	1.174	.....	100	0.0056	0.892	.....	100
Fe	.....	.....	.....	.....	(?)	0.800		
SO_4	.....	5.268	.....	.....	.....	10.680		
H_2O (250° C.)	.....	2.365	.....	.....	.....	2.604		

Lead is converted into $PbSO_4$, which is practically insoluble and goes wholly into the anode mud, consuming acid.

Tin goes into solution and then falls out as a basic sulphate or arsenate, liberating free acid. It has been noticed that Sn acted favorably upon the smoothness of the cathode copper. This is probably due to its causing the reduction of copper arsenate to arsenite, with which it forms an insoluble compound and thus purifies the bath.[2] At the works of the Chicago Copper Refining Co. (now dismantled), the late H. L. Bridgman used to add 25 lb. Sn to 100 tons of Cu in treating copper rich in As; the practice was too expensive for ordinary work. At present the arsenic is eliminated by smelting methods, and no high-arsenic copper is used as anode.

Of the metals in Group 2, Au and Pt are not dissolved; Ag also is insoluble under normal conditions of electrolyte. Any Ag found in the cathode has been carried to it mechanically. Should the electrolyte become neutral, Ag will be dissolved and deposited.

Of the compounds assembled in Group 3, Cu_2O is always present in the anode; it is not attacked electrolytically, but reacts with H_2SO_4 as follows: $Cu_2O + H_2SO_4 = Cu + CuSO_4 + H_2O$. The Cu enters the mud and the $CuSO_4$ enters the electrolyte. The compounds Cu_2Se, Cu_2Te, Ag_2Se, Ag_2Te, and Cu_2S are attacked neither electrolytically nor chemically.

In Group 4 are collected the three metals which are partly dissolved and which partly fall again out of solution as basic sulphates and arsenates, or may be deposited with the copper on the cathode. The e.m.f. necessary for decomposition is for Cu 0.30, for As 0.27, for Bi 0.21, for Sb 0.10 volt.[3]

[1] L. Addicks, 1912.

[2] ULKE, *Mineral Ind.*, 1897, VI, 242; PETERS, "Modern Copper Smelting," 1895, p. 600.

[3] NEUMANN, *Z. phys. Chem.*, 1894, XIV, 229.

Arsenic in the metallic state is dissolved as $As_2(SO_4)_3$, and this salt is more or less decomposed by hydrolysis: $As_2 \cdot (SO_4)_3 + 6H_2O \rightleftarrows 2H_3AsO_3 + 3H_2SO_4$, when H_3AsO_3 (or As_2O_3 + aq.), being only slightly soluble, falls out of solution and goes into the mud. If with a difference in potential of 0.3 volt, a current density of 15 to 20 amp. per square foot, and a bath temperature of 40 to 50° C., the As content of the electrolyte reaches 2 per cent some may be occluded in the cathode; hence the aim is to keep the As content below 1.25 per cent. Deposition also takes place when the Cu content falls below 2.8 per cent. With an anode containing 0.3 per cent As, from 30 to 35 per cent of the As goes into the mud, and from 70 to 65 per cent into the electrolyte. This general figure is changed by the As content of the electrolyte, as, with a bath already containing a considerable amount of As, more of this metal will go into the mud than into the solution. With very small quantities of As, as in refining some Lake copper, all the As is precipitated by other impurities and goes into the mud. According to Wickes,[1] deposition of As is largely governed by the degree of hydrolization.

The relation between As content of electrolyte and conductivity of cathode Cu is shown in Fig. 242 (Addicks).

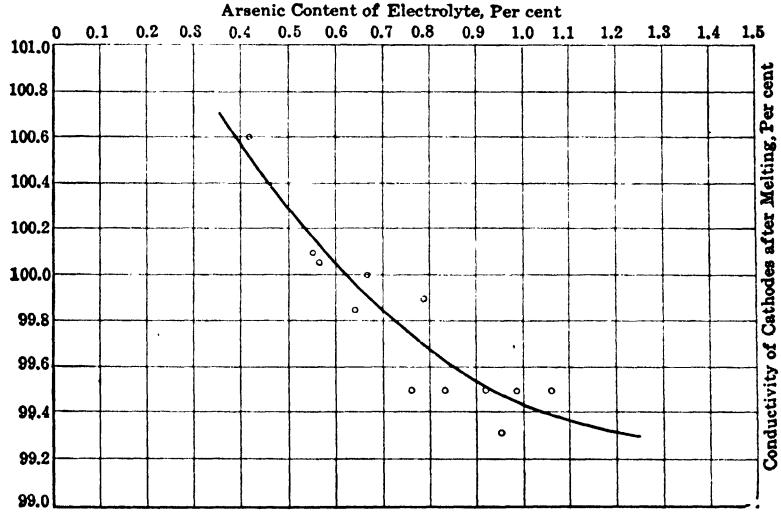

FIG. 242.—Relation of arsenic-content of electrolyte and conductivity of cathode copper (Addicks).

From a neutral solution As is readily deposited on the cathode.

Wen[2] found that additions of small amounts of HCl, Na_2SO_4, $AlCl_3$, and NaCl improved the cathode copper chemically in hindering the deposition of As and Sb, and physically in preventing the formation of trees. Of these inorganic additions, NaCl is the most effective.[3] Organic agents, such as

[1] *Trans. A. I. M. E.*, 1905, XXXV, 40.

[2] Dissertation, Columbia University, 1911; *Trans. Am. Electrochem. Soc.*, 1911, XX, 121.

[3] See also SPEER, *op. cit.*, 1912, XXII, 281.

gelatine and tannin, aid in furnishing smooth deposits; this is not the case with peptone.[1] The combined addition of 0.01 per cent Cl in the form of NaCl, and of 0.01 to 0.02 per cent gelatine gives a smooth ductile deposit of great purity with an electrolyte containing $CuSO_4 + 5$ aq., 15 per cent and free H_2SO_4 10 per cent held at 40° C., even when this contains as much as 6 per cent As, the current density being 40 amp. per square foot and the pressure about 0.5 volt.

It is common practice to add a very small amount of glue to the storage tank for electrolyte. Even the usual small addition decreases the conductivity of the bath; further it has been found that it takes a much longer time in the refining furnace to bring such cathodes to the stage of set copper than if no glue whatever has been used.

Antimony.[2]—The behavior of Sb is similar to that of As, but Sb is less readily deposited. In large-scale work some insoluble dark antimony compound is often seen floating on the surface of the electrolyte; there is then danger of its adhering to the cathode and becoming entrapped. Care is usually taken to collect it from the last of a series of tanks forming cascades, by placing a screen across the outlet or beneath the overflow. The antimony content of the electrolyte appears to remain approximately constant at 0.03 per cent.

The effects of adding organic agents have been noted under arsenic.

Bismuth.—This stands between As and Sb as regards its behavior in electrolysis (page 353); it is more readily deposited than As. According to Terrill,[3] an addition of a drop of Br water to a sample of electrolyte will indicate by the formation of a white cloud the presence of Bi; if the cloud appears at once, the danger point of electrodeposition has been reached; if it takes about 1 min. to form, the danger point will be reached in about 48 hr. Usually Sb, and especially Bi, occur in quantities too small to cause any trouble with the cathode copper.[4]

236. The Current.—The efficiency of the refining process is dependent upon the character and temperature of the electrolyte, the current density, and voltage.

For a given temperature the conductivities of a $CuSO_4$ and a H_2SO_4 solution increase within certain limits with the $CuSO_4$ and H_2SO_4 present, but by the addition of H_2SO_4 to the $CuSO_4$ solution the dissolving power of the latter for $CuSO_4$ is diminished, as well as the dissociation of the salt, *i.e.*, the conductivity of the electrolyte. In the same manner the dissociation of H_2SO_4 in the electrolyte is diminished by the presence of $CuSO_4$. Tables XCIII and XCIV give the experimental results of Richardson and Taylor.[5]

[1] JARVIS, *School Mines Quart.*, 1909, XXX, 100.

[2] HAMPE, *Eng. Mining J.*, 1892, LIV, 78; *Berg. Hüttenm. Z.*, 1892, LI, 177; *Chem. Z.*, 1892, XVI, 417; SPRENT, C., "Das Verhalten von Antimon bei der Kupferraffination," Dissertation, Dresden, 1911.

[3] *Trans. Inst. Min. Met.*, 1897–98, VI, 215.

[4] See also MOTHERWELL, *Met. Chem. Eng.*, 1913, XI, 670.

[5] *Trans. Am. Electrochem. Soc.*, 1911, XX, 179; *Met. Chem. Eng.*, 1911, IX, 536.

TABLE XCIII.—CONDUCTIVITIES OF MIXTURES OF $CuSO_4 + 5$ AQ. AND H_2SO_4 IN RECIPROCAL OHMS PER CUBIC CENTIMETER

Temperature	25° C.					45° C.				
Gram H_2SO_4 in 100 c.c	0	5	10	15	20	0	5	10	15	20
Gram $CuSO_4$ +5 aq. in 100 c.c.										
0	.....	0.208	0.410	0.565	0.683	.....	0.246	0.492	0.683	0.839
5	0.953	0.204	0.388	0.531	0.646	0.0205	0.242	0.461	0.643	0.791
10	0.0221	0.195	0.350	0.500	0.600	0.0294	0.222	0.422	0.626	0.738
15	0.0343	0.189	0.338	0.458	0.558	0.0468	0.217	0.381	0.545	0.690
20	0.0423	0.182	0.319	0.433	.....	0.0574	0.212	0.378	0.521	0.643

TABLE XCIV.—CONVERSION OF DATA IN TABLE XCIII TO PRACTICAL NOTATIONS

Gram $CuSO_4$+5aq. in 100 c.c.	Cu, per cent	$CuSO_4$+5 aq. per cent	Gram H_2SO_4 in 100 c.c.	H_2SO_4, per cent
4.0	1	3.91	5.15	5
8.2	2	7.82	10.17	10
17.4	3.99	15.64	16.5	15
27.4	5.99	23.46	22.8	20
32.9	6.98	27.37		

The conductivities of working solutions are about 15 per cent smaller than those found by the experimental work with mixtures of pure $CuSO_4 + 5$ aq. and H_2SO_4.

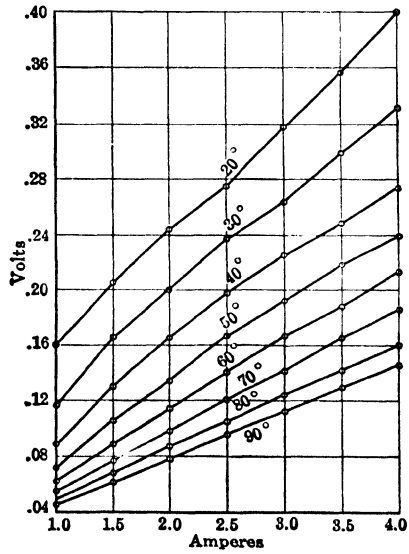

FIG. 243.—Relation of current and temperature in electrolyte with 16 per cent $CuSO_4$ + 5aq., 9 per cent free H_2SO_4.

Table XCIII has shown that a rise in temperature of bath increases the conductivity. The relation between voltage and current density in a bath with

16 per cent $CuSO_4$ + 5 aq. (or 4 per cent Cu) and 9 per cent free H_2SO_4, for temperatures ranging from 20 to 90° C., is shown in Fig. 243.[1] The voltage does not

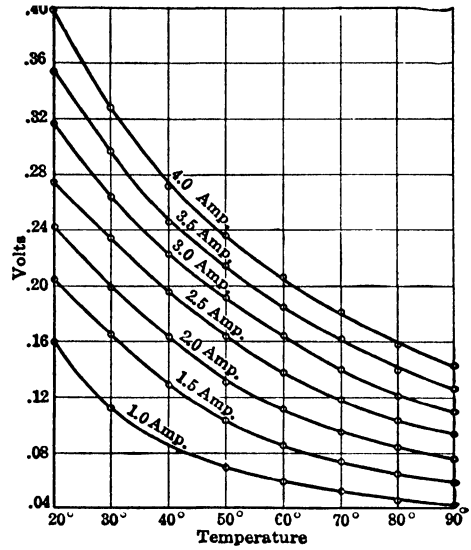

FIG. 244.—Relation of voltage and temperature for different current densities in electrolyte with 16 per cent $CuSO_4$ + 5aq., 9 per cent free H_2SO_4.

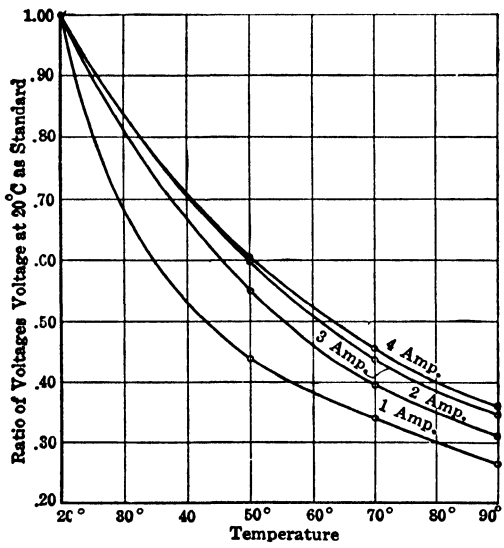

FIG. 245.—Relation of voltage-ratio and temperature for different current-densities in electrolyte with 16 per cent $CuSO_4$ + 5aq., 9 per cent free H_2SO_4.

rise in the same ratio as the amperage, as might be expected, and give a straight-line curve; the curves converge toward the current density axis, and do this the more the lower the temperature of the bath.

[1] SCHWAB and BAUM, *J. phys. Chem.*, 1903, VII, 497.

The relation between voltage and temperature for different current densities is given in Fig. 244. The voltage, measured with electrodes 1 cm. apart, decreases as the temperature rises; the decrease is rapid at low temperatures, and becomes less and less as the temperature rises.

In order to make the curves in Fig. 244 independent of the electrode distance, the curves in Fig. 245 have been drawn by Schwab and Baum, in which the voltage ratio has been plotted as ordinate instead of the real voltage, voltage at 20° C. having been made the standard. If the voltage at one temperature is known, that for another temperature is found through the curve.

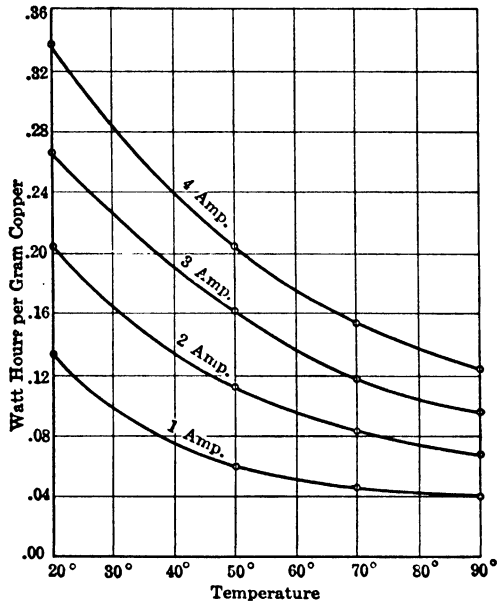

FIG. 246.—Relation of watt-hour and temperature for different current-densities in electrolyte with 16 per cent $CuSO_4$ + 5aq., 9 per cent free H_2SO_4.

Theoretically 1 amp.-hr. deposits from a $CuSO_4$ solution 1.186 g. Cu, or, in order to deposit 1 lb. av. Cu, there are required 382.4 amp.-hr. In practice, 400 to 500 amp.-hr. are necessary. The relation between the watt-hour required for the deposition of 1 g. Cu and the operating temperature based on the laboratory experiments of Schwab and Baum is given in Fig. 246.

Kern and Chang[1] have also studied the conductivity of electrolyte under different conditions. Some of their results are given in Tables XCV and XCVI. They draw the following conclusions from their work:

(*a*) The copper content of refining electrolytes should be kept between 30 and 35 g.p.l. (approximately 120 to 140 g. $CuSO_4 \cdot 5H_2O$) and the free sulphuric acid as high as economy permits up to 175 g.p.l. With higher free sulphuric acid content the solubility of copper sulphate decreases rapidly, and also the added increase in conductivity with more concentrated sulphuric acid is relatively not so rapid.

[1] *Trans. Am. Electrochem. Soc.*, 1922, XLI, 181.

(*b*) Maintain the temperature of the electrolyte as high as economy permits. The economical temperature limit seems to be 55° C.

(*c*) Keep nickel and iron content of the electrolyte as low as possible, as the presence of sulphates of these metals greatly depresses the conductivity of the electrolyte.

TABLE XCV.—SPECIFIC CONDUCTIVITY OF SOLUTIONS OF SULPHURIC ACID, COPPER SULPHATE, AND OF SOLUTIONS CONTAINING FREE SULPHURIC ACID AND COPPER SULPHATE

Conductivity expressed in reciprocal ohms per centimeter cube

Temperature of solutions 25° C.

Grams of free H_2SO_4 per 100 c.c.		0	5	10	15	20
Grams of $CuSO_4 \cdot 5H_2O$ per 100 c.c.	0	.....	0.2165	0.4069	0.5559	0.6684
	5	0.0148	0.1977	0.3714	0.5123	0.6195
	10	0.0252	0.1868	0.3480	0.4815	0.5729
	15	0.0333	0.1772	0.3214	0.4392	0.5256
	20	0.0402	0.1750	0.3017	0.4087	0.4852

Temperature of solutions 40° C.

Grams of free H_2SO_4 per 100 c.c.		0	5	10	15	20
Grams of $CuSO_4 \cdot 5H_2O$ per 100 c.c.	0	.....	0.2490	0.4722	0.6498	0.7901
	5	0.0191	0.2233	0.4272	0.6016	0.7433
	10	0.0320	0.2096	0.3989	0.5619	0.6792
	15	0.0425	0.1992	0.3688	0.5135	0.6263
	20	0.0517	0.1956	0.3486	0.4807	0.5810

Temperature of solutions 55° C.

Grams of free H_2SO_4 per 100 c.c.		0	5	10	15	20
Grams of $CuSO_4 \cdot 5H_2O$ per 100 c.c.	0	.....	0.2751	0.5262	0.7312	0.8981
	5	0.0229	0.2418	0.4740	0.6731	0.8339
	10	0.0382	0.2250	0.4394	0.6313	0.7733
	15	0.0510	0.2135	0.4055	0.5765	0.7144
	20	0.0623	0.2059	0.3835	0.5403	0.6643

TABLE XCVI.—EFFECT OF THE PRESENCE OF ARSENIC, NICKEL SULPHATE, AND FERROUS SULPHATE UPON THE CONDUCTIVITY OF A COPPER-REFINING ELECTROLYTE CONTAINING 135 G. FREE SULPHURIC ACID AND 35 G. COPPER (137 G. $CuSO_4 \cdot 5H_2O$) PER LITER OF SOLUTION

Conductivity expressed in reciprocal ohms per centimeter cube

Temperature of solutions 25° C.

Grams of impurities per liter	Effect of presence of		
	Arsenic	Nickel	Iron
0	0.4094	0.4094	0.4094
10	.....	0.3827	0.3726
20	0.4014	0.3595	0.3424
30	0.3981	0.3379	
40	0.3948		

TABLE XCVI.—(*Continued*)

Temperature of solutions 40° C.

Grams of impurities per liter	Effect of presence of		
	Arsenic	Nickel	Iron
0	0.4766	0.4766	0.4766
10	.....	0.4463	0.4345
20	0.4708	0.4202	0.4003
30	0.4670	0.3956	
40	0.4621		

Temperature of solutions 55° C.

Grams of impurities per liter	Effect of presence of		
	Arsenic	Nickel	Iron
0	0.5307	0.5307	0.5307
10	.....	0.4980	0.4834
20	0.5265	0.4688	0.4469
30	0.5231	0.4440	
40	0.5194		

A. MULTIPLE SYSTEM

237. The Multiple (Elkington) System in General.[1]—In this process (Figs. 247 to 248), the anodes *a* of high-grade copper and cathodes *b* of pure copper

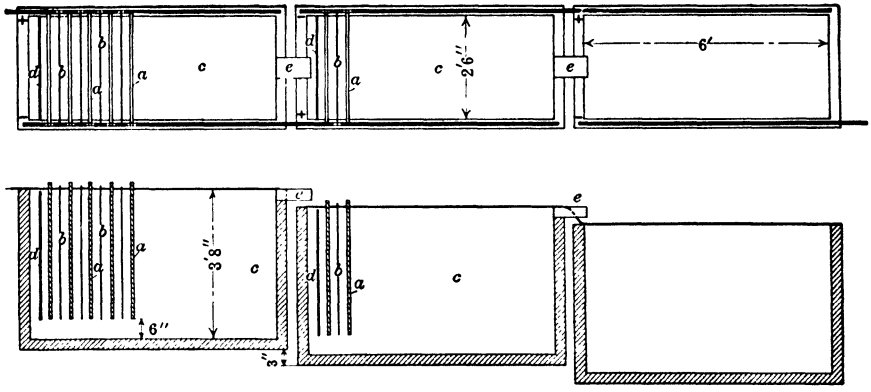

FIGS. 247-248.—The multiple system.

[1] Anaconda: Editor, *Eng. Mining J.*, 1896, LXII, 271; HERING, *Berg. Hüttenm. Z.*, 1893, LII, 54; HOFMAN, *Trans. A. I. M. E.*, 1904, XXXIV, 308; Raritan No. 1: ADDICKS, *Mineral Ind.*, 1900, X, 261 (remodeled in 1912 on lines of No. 2); Balbach S. & R. Co.: *Electrochem. Ind.*, 1904, II, 303 (remodeled 1910); Great Falls: HOFMAN, *Trans. A. I. M. E.*, 1904, XXXIV, 308; BURNS, *op. cit.*, 1913, XLVI, 703; Chrome: ADDICKS, *Mineral Ind.*, 1906, XV, 301; *Eng. Mining J.*, 1907, LXXXIII, 1001; VAIL, *Eng. Mining J.*, 1913, XCV, 1031; Raritan No. 2: EASTERBROOKS, *Electrochem. Met. Ind.*, 1908, VI, 181, 245, 277; *Eng. Mining J.*, 1917, CIV, 691; Lithgow, N. S. W.: BLAKEMORE, *Trans. Australian Inst. Mining Eng.*, 1912, XV, 36; *Eng. Mining J.*, 1910, XC, 717, 769; Port Kembla, N. S. W.: CASEY, *Eng. Mining J.*, 1910, XC, 1111; Trail, B. C.: RICKARD, *Min. Sci. Press*, 1916, CXIII, 903, 939; ANTISELL and SKOWRONSKI, "Electrolytic Copper Refining," *Eng. Mining J.*, 1917, CII, 874; MCALLISTER, "Cost and Operation of Electrolytic Refineries," *Eng. Mining J.*, 1918, CVI, 95, 337.

are connected in multiple and suspended crosswise in an oblong tank *c*, charged with a solution of blue vitriol containing free sulphuric acid. A current of suitable strength passes from the anodes through electrolyte to cathodes, dissolves copper from the anodes and deposits it on the cathodes, while insoluble impurities collect on the bottom of the tank as a residue called anode mud or anode slime. The deposited copper with its cathode is removed at intervals, melted down in a reverberatory furnace, toughened, and cast into suitable forms. The anode mud containing the electronegative precious metals and insoluble impurities is refined for recovering the precious metals. Occasionally, other substances, such as selenium, platinum and palladium, are recovered as by-products; tellurium, for which there is a limited market at present, usually goes to waste. The uncorroded part of the anode goes back into the furnace from which the anodes are cast.

238. Electrolyte—Composition, Temperature, and Circulation.—The range of composition of the electrolyte is $CuSO_4 + 5$ aq., 12 to 16 per cent (= 3 to 4 per cent Cu) and free H_2SO_4, 10 to 16 per cent; the usual figures are: Cu 3 and free H_2SO_4 12 per cent.

The Cu content is never allowed to fall below 2½ per cent, as otherwise there is danger of As being plated out; with over 13 per cent free H_2SO_4 the bath is decomposed electrolytically and polarization is likely to offset increased conductivity.[1] In Table XCVII are given analyses of electrolytes of different degrees of purity and concentration.

TABLE XCVII.—ANALYSES OF ELECTROLYTE

	Great Falls, Mont.		Perth Amboy, N. J.		Maurer, N. J.
	Refining tank	Starting-sheet tank	Room I	Room II	
Cu	3.280	3.404	3.91	4.00	3.1
As	0.500	0.425	1.03	1.02	1.0
Sb	0.041	0.034	0.03	0.03	0.03
Ni	0.377	.....	0.38	1.00	
Co	0.016				
Bi	0.021				
Fe	0.600	0.383	0.096	0.104	0.25
Se	None				
Te	None				
Pb	Trace				
Zn	0.418				
Ag, Au	None				
$CaSO_4$	.....	.....	0.13	0.19	
Na_2SO_4	.....	.....	1.26	0.85	
Free H_2SO_4	13.030	10.213	12.85	12.24	12.0
Total H_2SO_4	.....	.....	19.73	18.89	
Cl	0.004	0.0034	.....	0.0030	0.003
Specific gravity	1.220	1.175	1.255	1.255	1.2
Reference	(a)	(a)	(b)	(b)	(c)

(a) BURNS, *Trans. A. I. M. E.*, 1913, XLVI, 716.
(b) Private communication, C. H. Aldrich.
(c) Private communication, H. H. Alexander.

[1] ADDICKS, "Rapid Measurement of Conductivity," *Electrochem. Ind.*, 1904, II, 306.

The different soluble metal sulphates appear to act cumulatively as regards conductivity, thus, *e.g.*, the conductivity of a bath with 3 per cent Cu and 0.5 per cent Ni is approximately the same as one with 3.5 per cent Cu.

In working, the normal composition of the bath is likely to be changed. It is impoverished in Cu because the electropositive metals Zn, Fe, Ni, Co, and Mn go into solution and replace equivalent amounts of Cu; it is enriched in Cu by the chemical action of the free H_2SO_4 and by the dissolving effect of $CuSO_4$ upon Cu (§228), which takes place largely at the surface of the bath; the total amounts to from 0.5 to 1 per cent of the Cu deposited. With the high-grade anode in common use at present, any impoverishment in Cu is more than balanced by enrichment; hence some Cu is removed at intervals either in the metallic state, by plating out, or as blue vitriol by crystallizing out. In general, from 1 to 2 per cent of the cathode capacity has to be removed. However, in the presence of much Fe and Ni, more Cu may be deposited than is dissolved. The electrolyte is always impoverished in its content of free H_2SO_4, because of the separation of impurities as normal or basic sulphates, and the chemical action of the free H_2SO_4 upon Cu and Cu_2O. The acid has, therefore, to be replenished.

The temperature of the bath ranges from 40 to 60° C. The hotter the bath the lower the resistance and the smoother the cathode deposit, but the chemical action of the acid is also greater. The electric energy raises the temperature to about 34° C.; for a higher temperature heating by steam coils (1 to 2 in. in diameter) in storage tanks is required. With 60° C. the evaporation in 24 hr. in a tank is about 22 lb. water per square foot solution exposed. The fall in temperature of the electrolyte in passing through a cascade is about 5° C. in summer, and 10° C. in winter. The idea of covering tanks[1] to diminish the reduction of temperature owing to radiation is at present impracticable.[2] Experiments are, however, under way to make it practicable.

Continuous circulation is essential to correct differences in composition of electrolyte caused by the process. At the anodes, where copper goes into solution, the electrolyte is heavier than at the cathodes, where it goes out of solution; the heavier part sinks and the lighter rises, causing layering in the bath; the current passing mainly through the heavier solution causes uneven corrosion of the anode and irregular deposition on the cathode. The greater the current density and the higher the temperature of the bath the more rapid the circulation required. Thus, with a current density of 40 amp. per square foot of cathode area, the electrolyte is exchanged once in 3 hr.; with 15 amp. once in 4 hr., with 10 amp. once in 5 or 6 hr., the rate of flow ranges from 6 to 3 gal. per minute.[3] It is important that the flow be sufficiently slow to permit all anode residue to settle, and its path in such a direction as to leave settled residue undisturbed. The rate of circulation is also governed by the impurity and precious metal of the anode. Thus, the higher the As content the greater has to be the rate of circulation, if the deposition of As is to be avoided; on the other hand, the higher the content in precious metal the slower has to be the

[1] SCHWAB and BAUM, *J. Phys. Chem.*, 1903, VII, 493.

[2] ADDICKS, *Electrochem. Ind.*, 1903, I, 487.

[3] Tests at Great Falls by BURNS, *Trans. A. I. M. E.*, 1913, XLVI, 721.

circulation in order to prevent stirring up the large amount of mud which settles on the bottom of the tank.

Kiliani[1] measured the differences in potential arising when working with and without circulation.

The usual method of circulation is to have rows of tanks on wide terraces with steps 2 to 3 in. high, and to let the electrolyte overflow from the tanks on the top row into those on the next row below and so on. Some plants have only one level for the tanks, others two, three, or five. In Fig. 249 the electrolyte is raised from a well into a main whence one part flows into a distributing box for the electrolyzing tanks arranged on either side in cascades, while another is diverted to the liberators, *i.e.*, tanks with insoluble anodes in which electrolyte is freed from Cu, As, etc., and then returned as fresh acid to the main circuit. From the last row of electrolyzing tanks the electrolyte flows into a trough emptying into the well or sump connected with the pump. Each of the tanks

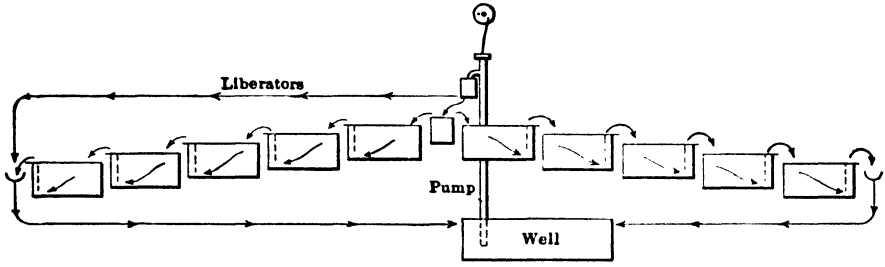

FIG. 249.—Circulation of electrolyte.

in Fig. 249, as well as in Figs. 260 to 262 (Great Falls, Mont.), shows a partition at the discharge end which reaches to within 6 or 8 in. from the bottom so as to leave room for the settling of the anode mud. The electrolyte is received on the top of the bath at one end, and withdrawn from near the bottom at the other; it thus has to travel diagonally through the tank, whereby a uniform density is maintained.[2] Another arrangement (Figs. 247 to 248) is to have the partition *d* at the feed end; when the electrolyte is delivered back of the partition, it sinks downward and travels diagonally upward to the discharge spout *e* at the delivery end.

The arrangement at the Raritan plant No. 2, Perth Amboy, N. J., is shown in Fig. 250. The electrolyte is delivered to a tank back of a semi-circular lead partition at the inflow side and passes to the bottom; the bulk of it overflows at the top at the opposite end, but a small amount of heavier solution is withdrawn near the bottom through three rows of small holes in the lead partition. Attention may be called in connection with Fig. 251 to the means employed for preventing any countercurrent or stray electric current from interfering with the main current. The delivery and receiving mains rest upon glass; the branch

[1] *Berg. Hüttenm. Z.*, 1885, XLIV, 273.

[2] Inefficiency of method with high current density at Great Falls: BURNS, *Trans. A. I. M. E.*, 1913, XLVI, 704.

delivery and receiving lead pipes are cut and connected by non-conducting hose, and are protected by vitrified brick.

If the tanks are all on one level, they may either receive their solutions severally from a common feed trough, as was the case with the original plant of Great Falls, Mont.,[1] and deliver into a common discharge trough, or the solution of each tank may be circulated independently by the Siemens-Borchers apparatus[2] sketched in Fig. 251. An L-shaped lead pipe *a* is lowered at one end of the tank so that the horizontal arm shall lie on the bottom and underneath the tray *b*, which is to receive the anode mud. A smaller lead tube *c*, drawn down at the bottom, is inserted into the vertical arm. Air under 3 or 4 lb. pressure is forced down tube *c*, rises between *a* and *c*, acts as an air-lift pump,

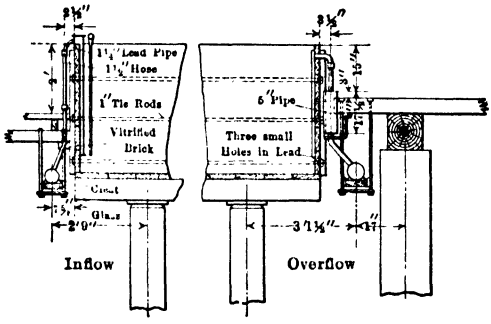

FIG. 250.—Circulation of electrolyte at Raritan plant No. 2.

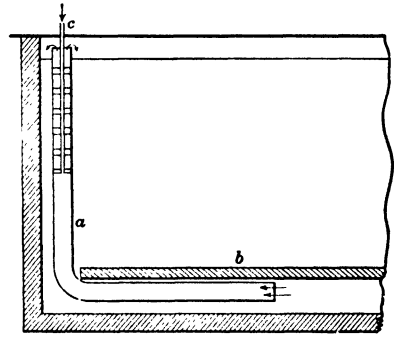

FIG. 251.—Siemens-Borchers circulation of electrolyte.

and causes the solution to overflow from pipe *a*; a corresponding amount, of course, must enter at the bottom. In this manner the solution of each tank is circulated independently of its neighbor, and at the same time aerated. The aeration of warm solution will cause ferrous salt to be converted into insoluble basic ferric salt, and the electrolyte to become purified. Schneider and Szontag[3] slightly modified the above device at Maurer, N. J. The rate of circulation by the apparatus is not sufficiently large for the current density used in the United States, and the method has therefore been given up.

A modification is in operation at Lithgow, N. S. W.,[4] where a vertical ¼-in. copper pipe connected with air under 5 lb. pressure at the upper end and turned up at the lower, discharges into the lower end of a ¾-in. vertical lead pipe reaching to within 6 in. from the bottom of the tank; the compressed air acts as a Pohle air-lift pump and raises the bottom part of the solution to the top; this is done in addition to the regular circulation of the electrolyte down the cascade. The fall in temperature of a bath varies with the size of tank, and the rate of circulation, which in its turn is dependent upon the current density.

[1] BURNS, *Trans. A. I. M. E.*, 1913, XLVI, 704.

[2] BORCHERS and MCMILLAN, *op. cit.*, p. 221; *Z. Elektrochem.*, 1904, p. 221.

[3] ULKE, *Eng. Mining J.*, 1896, LXII, 464.

[4] *Trans. Australian Inst. Mining Eng.*, 1912, XV, 36; *Eng. Mining J.*, 1910, XC, 717.

As shown on page 361 the range of temperature is from 5 to 10° C., varying with the season of the year.

The electrolyte from the lowest numbers of the cascades is collected in a sump and pumped into a distributing tank. Formerly lead-lined acid eggs and

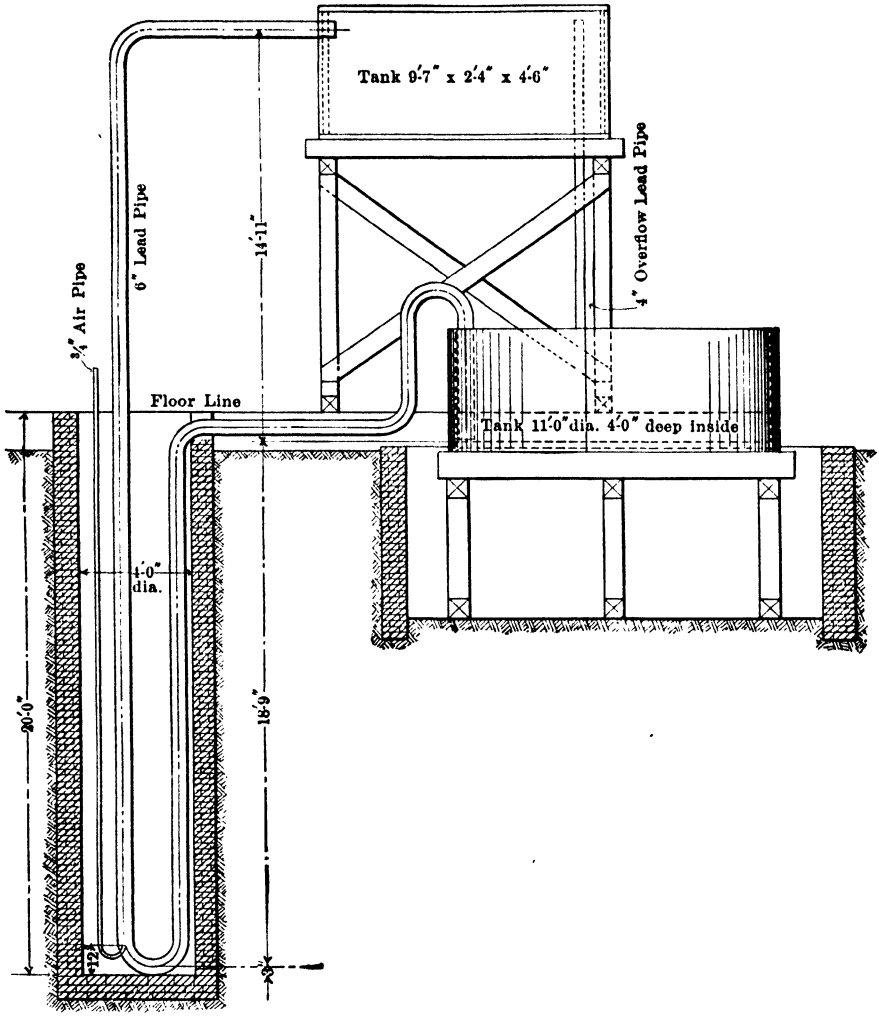

FIG. 252.—Pohle air-lift pump, Great Falls, Mont.

plunger pumps were used for this purpose; at present the Pohle air-lift pump[1] and the Antisell centrifugal pump have replaced the older apparatus.

The Pohle air-lift pump in use at Great Falls, Mont., is shown in vertical section in Fig. 252. The feed and delivery pipes, connected by a return bend, are 6 in. inside diameter, have ¾-in. walls of hard lead, are cast in 4-ft. lengths

[1] HOFMAN, "General Metallurgy," 1913, p. 71c.

with flanges (the air pipe is ¾ in.); the whole is held in a cement-lined well, 18 ft. 9 in. deep and 4 ft. in diameter. Working against a head of 14 ft. 8 in., 160 gal. of electrolyte (specific gravity 1.22) are raised per minute with 80 cu. ft. free air of 16-lb. pressure.

The Antisell centrifugal pump (Figs. 253 and 254) of the Raritan Copper Works, Perth Amboy, has a hard-lead (12 per cent Sb) cylinder, 4 ft. 6¾ in. high and 14 in. in diameter, above which are the bearings of the driving shaft carrying at its lower end the rotor making 750 r.p.m. The inlet and outlet pipes are 8 in. in diameter. The pump handles 46.5 cu. ft. solution per minute, has a capacity of 66 cu. ft., and requires 5 hp.

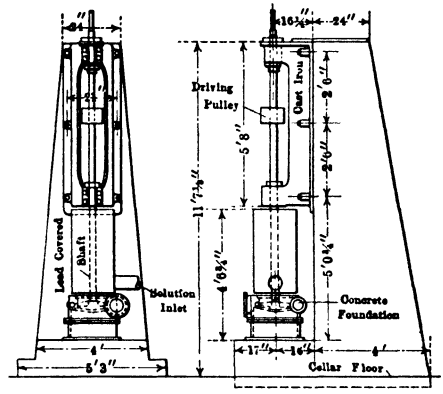

FIGS. 253–254.—Antisell circulating pumps, Raritan works.

239. The Current.—The drop in potential between tanks ranges from 0.2 to 0.4 volt. Magnus[1] found at Anaconda that of this total fall as much as 22.5 per cent was due to contact resistances and current leakages. At Great Falls, Mont.,[2] the drop between anode busbar and anode with the high current density used in 1913 was 7.40 per cent of total voltage, between cathode busbar and cathode 9.24 per cent, and across the electrolyte 83.36 per cent. Addicks[3] distributes the resistances in a tank as follows: metallic 10 per cent, liquid 60, transfer 5, contact 15, counter 5, slime 5. With well-insulated tanks and broken connections in circulating pipes, the current shunted around by grounds should not exceed 1 per cent of this total; short-circuits between anodes and cathodes or by indirect contacts between electrodes and tank walls amount to 5 ± per cent; hence the efficiency shows a range of 90 to 95 per cent. It is essential to keep contacts bright by scouring with emery; the bright surfaces are coated lightly with oil to retard corrosion and prevent creeping of electrolyte.

The current density shows a range of 15 amp. to 25 amp. per square foot (Great Falls);[4] the former average of eastern refineries of 15 amp. has been raised to 18. The low current density is due to the desire of preventing even a trace of As in the anode from passing to the cathode. The high density of Great Falls finds its explanation in the cheap water power of the Missouri River, which compensates by the large output for the given plant for the loss of energy. With a large density it is necessary to exchange the cathodes more frequently than with a low, in order to prevent short-circuiting. Thus, at

[1] *Electrochem. Ind.*, 1903, I, 561.

[2] BURNS, *loc. cit.*

[3] *J. Franklin Inst.*, 1905, CLX, 431; Private communication, 1912; See also HUTCHINSON, *Electrochem. Ind.*, 1904, II, 13; ADDICKS, *op. cit.*, p. 180; SPALDING, *Mining World*, 1910, XXXII, 102 (POWER).

[4] Forty amperes in 1904, and 34 in 1913.

Great Falls, in 1904, with 40 amp., exchanging cathodes every second day gave an ampere efficiency of 91 per cent, while with four-day cathodes this fell to 85 per cent.

The data by Burns,[1] dealing with current densities of 32.6 to 36.9 amp. per square foot, used in 1913, are given in Table XCVIII.

TABLE XCVIII.—RELATION OF AGE OF CATHODES AND NUMBER OF ELECTRODES IN TANK

Age of cathodes, days	Electrodes per tank		Average amperes	Average amperes per square foot	Ampere efficiency, per cent	Cu per kilowatt-hour, pounds	Cathode, ounces Ag per ton	Cathode, per cent As + Sb
	Anodes [a]	Cathodes						
4	20	20	9,300	36.9	88.0	3.93	1.32	0.0036
2	20	20	8,808	35.0	90.85	3.72	0.83	0.0030
3	20	20	8,878	35.2	89.00	3.75	0.83	0.0032
2	21	21	9,035	34.1	90.90	3.84	0.89	0.0032
3	21	21	9,223	34.8	89.40	3.87	1.02	0.0029
2	22	22	9,071	32.6	90.50	4.02	0.89	0.0033
3	22	22	9,167	33.0	88.80	4.07	0.95	0.0030

(a) Converter anodes: Cu 99.13, As 0.127, Sb 0.055 per cent; Ag 33.91 and Au 0.22 oz. per ton.

Addicks[2] gives figures showing the relation between age of cathodes and current density. These are given in Table XCIX.

TABLE XCIX.—RELATION BETWEEN AGE OF CATHODES AND CURRENT DENSITY

Current density	Pounds per tank-day	Pounds per cathode-day	Cathode age in days	Pounds per cathode	Cathodes per ton	Total per ton
5	81	3.4	100.0	340	5.9	$0.18
10	162	6.7	37.0	248	8.1	0.24
15	243	10.1	15.2	154	13.0	0.39
20	324	13.5	9.6	130	15.3	0.46
25	405	16.9	6.8	115	17.4	0.57
30	486	20.2	5.2	105	19.0	0.52
35	567	23.6	4.0	95	21.1	0.63
40	648	27.0	3.2	86	23.3	0.70

With a density of 15 to 20 amp., two cathodes serve for one anode; with 10 to 12 amp., they are exchanged only when the corroded anode is ready to be removed.

Large plants are divided into several sections, each of which is served by one generator. Numerical examples are shown in Table CVI, where details are given with the descriptions (§257) of Great Falls and Raritan No. 2 plants.

240. Anode.—The anode ought to be of such a character that it is evenly corroded and does not affect the cathode deposit. Even corrosion is possible only if the amount of impurity present is small and the pitch of the copper right. An anode rich in precious metals usually assays 97.5 per cent Cu; one with little silver, 99 per cent Cu and over; 95 per cent Cu is probably the lowest

[1] *Loc. cit.*

[2] "Copper Refining," 1st ed., 1921.

permissible figure. Analyses of anodes are given in Table C. If an excess of harmful impurity is present in any shipment, it is the policy to mix this with material of higher grade from another source in the casting furnace instead of running chances of overcharging the electrolyte with harmful metal and obtaining inferior cathode copper.

In the United States most of the anode material is converter copper, hence high-grade, and low in As, say, 0.05 to 0.10 per cent. Formerly, with reverberatory copper the As content frequently exceeded 1 per cent.

TABLE C.—ANALYSES OF COPPER ANODES[a]

	Range, U. S.	Average, U. S.	Kosaka, Japan	Maurer, N. J.	Great Falls, Mont.	Raritan, Perth Amboy, N. J.	
Cu	98 to 99.5	99.25	99.034	.....	99.1300	98.986	99.5741
Ag oz.	0 to 300	incl in.	42.19	300	39.98	90.00	75.00
Au oz.	0 to 40	Cu	0.4509	.....	0.23	1.25	0.60
As	0 to 2	0.05	0.044	0.08 to 0.15	0.1183	0.196	0.048
Sb	.....	0.05	0.065		0.0534	0.017	0.018
Bi	.....	0.01	0.049	..	0.0038	0.014	0.0055
Fe	.....	0.01	0.004	0.03	0.0110	0.047	0.019
Ni	.....	0.08	....	.....	0.0420	0.093	0.021
Co	.....	.....	....	.....	0.0018		
S	.....	0.003	0.009	.....	0.2610	0.177	
Se	.....	0.03	.....	some	0.0090	0.006	0.011
Te	.....	0.03		some	0.0170	0.014	0.013
Si	.....	0.05					
Pb	....	0.02	0.109		0.0065	0.140	0.013
Zn	.....	0.01	0.001	.....	0.0035		
Reference	ADDICKS, *J. Franklin Inst.*, 1905, clx, 422.	ADDICKS, private communication, 1912	Private communication, 1910	Private communication, 1912	BURNS, *Trans. A. I. M. E.*, 1913, xlvi	Private communication, 1912	

[a] See also p. 352.

Anodes cast direct from the converter are less desirable than after the copper has been transferred to a reverberatory furnace and poled to reduce the O and SO_2 content, as the anode is irregular in thickness, calling for wide spacing in the tank, is unevenly corroded, gives much scrap, and furnishes an anode mud rich in Cu due mainly to the presence of much Cu_2S. Thus experiments at Great Falls, Mont.,[1] showed that converter copper with Cu 99.27 and As, Sb 0.071 per cent, Ag 61.14 and Au 0.20 oz. per ton, gave 8 per cent scrap, screened (40-mesh) mud with Cu 40.3 per cent, Ag 6,755 and Au 18.34 oz. per ton, and cathodes with 1.25 oz. Ag per ton; while similar copper with Cu 99.27, As, Sb 0.071 per cent, Ag 61.14 and Au 0.219 oz. per ton poled in the reverberatory furnace gave 5.30 per cent scrap, mud with Cu 18.80 per cent, Ag 14,079 and Au 38.45 oz. per ton and cathodes assaying 0.95 oz. per ton. If, nevertheless, anodes are sometimes cast direct from the converter, the reason is that saving the expense of the work in the reverberatory furnace more than balances the disadvantages of a higher percentage of scrap, of a greater cost of treating

[1] HOFMAN, *Trans. A. I. M. E.*, 1904, XXXIV, 310; BURNS, *op. cit.*, 1913, XLVI, 713, 727.

the mud, and of the loss of Ag in the cathode copper. In preparing anode material in the refining furnace, the poling is carried only to plate pitch, *i.e.*, the cast plate shall have a level surface, and for this the copper must retain a considerable amount of Cu_2O.

The size of the anode is largely determined by the convenience of handling. At first, anodes were made small, 30 by 24 in. and 1 in. thick, and weighed about 230 lb. They were raised and lowered singly by a block and tackle suspended from an overhead track. At present, they are usually larger, about 3 ft. square, sometimes weighing as much as 700 lb. The anodes of a tank are raised and lowered together by means of an overhead electric traveling crane. The width of the anode is limited in part by the tendency of the opposing cathode to curl before it has thickened sufficiently to become rigid. In fact, a new cathode is usually removed after it has been in the tank for two days, straightened in order to make the electrode distance uniform, and lowered again in place. This curling can be avoided by using two cathodes for one anode, as was done at Anaconda, but this complicates the handling by means of a crane. The length may be influenced by the percentage of precious metal present, as the lower end of the cathode is likely to become richer in Ag than the upper because of contamination with falling slime. Anodes containing much precious metal will be made shorter than those containing little; the other remedy, deepening of tanks, means a larger crane lift.

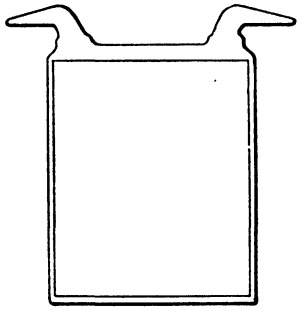

FIG. 255.—Anode with shoulder.

The thickness depends again upon the amount of precious metal as well as upon the cost of handling. A thick anode takes a long time for corrosion and represents a large average for tank resistance, but requires only a single handling; a thin anode furnishes a large percentage of scrap to be resmelted because of the disproportionate weight of the supporting lugs. An anode is expected to be corroded in from two to six weeks, and is made from 1 to 1.5 in. thick. Details of some anodes are given in Table CVI.

The manner of suspension, and with it the form of the upper part of the anode, varies at different works. Ordinarily, the anode is cast with a projection or arm or lug on either side, as in Fig. 255, representing the Anaconda anode, by which it rests on the conductor bars. Various other methods of suspension have been used in order to diminish the amount of scrap which must be returned to the melting furnaces, but it has been found in all cases that the remelting cost was less than the additional cost of the device used and all refineries now use some form of cast lugs. Some details of shape and thickness vary but the differences are slight.

The manner of casting has undergone many changes. At first, the open cast-iron anode molds placed on the floor were filled by hand ladles;[1] later suspended (bull) ladles came into use, and these are still common in plants

[1] Illustration, *Mining Sci. Press*, 1899, LXXIX, 266.

dealing with charges of 30 tons of copper and less; for some time the metal was tapped into sand molds. The advent of the Walker casting machine (Figs. 218 to 219), which permitted reverberatory-furnace charges of 200+ tons of copper, did away with ladling in large plants. Link-belt machines (page 279)

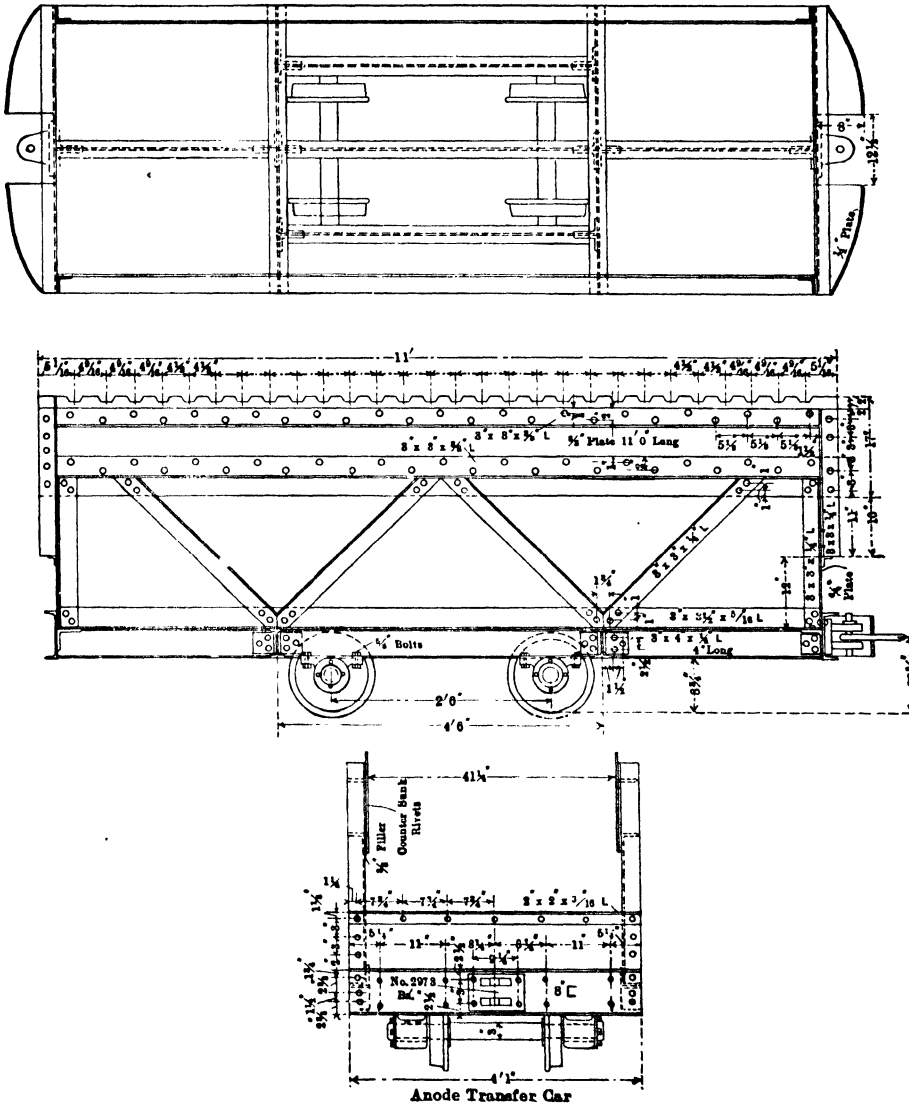

FIGS. 256–258.—Transfer-car for anodes.

are found at Perth Amboy, N. J., and Anaconda, Mont. Special attention has been given to the details of the molds to prolong the life, to insure a smooth bearing surface of the arm, and to obtain an easy release of the anode. An anode is released from the mold either by a knock-out pin (page 276) raised

near the top a detachable part of the rim of the mold. A released anode is picked up by a compressed-air lifting apparatus and lowered in an iron water tank, the sides of which have notches to receive the shoulders of the anodes. A tank is of the same size as a depositing tank, and the distance between the notches is equal to the electrode distance. The anodes are cooled and scaled, *i.e.*, freed from Cu_2O, by the immersion. From the immersion tank the anodes are removed by an overhead electric crane and deposited on a transfer car (Figs. 256 to 258), on which they are hauled to the tank room.

The anode molds used are always open. Truswell has developed a closed mold,[1] and also Ladd.[2]

241. Cathode.—The cathode, or starting sheet, is a thin plate of copper deposited upon rolled-sheet copper, ⅛ to ¼ in. thick, in a special set of "stripping tanks," which usually are made deeper than the regular corroding tanks. Figures 259 to 260 shows such a "stripping sheet" riveted to a pair of cross-bars. In order to prevent the deposited metal from adhering to the rolled sheet, the latter is greased and then sprinkled from a pepper box with well-conducting graphite, or painted with a low-grade mineral oil. Sometimes the rim of the rolled sheet is coated for the width of 1 in. with asphalt in order to prevent the plating-out of any copper and thus facilitate the stripping of the deposited copper when this has reached a thickness of about 1/16 in. The coating of asphalt is applied with a brush, or the sheet is dipped. Sometimes grooved strips of wood slipped over the sheet take the place of the asphalt. Ordinarily instead of giving the sheet copper approximately the shape of the starting cathode, a small groove, 1/16 in. deep, is made in the stripping sheet, ¼ in. from the rim, *a*–*a* on one side and *a'*–*a'* on the other in Fig. 259, which traces the outline of the starting cathode; than the sheet is greased, peppered, and suspended in a corroding tank supplied with the regular anodes. The deposited copper will part readily along the groove when the plated metal is being removed. This makes the stripping, first of the metal and then of the border by means of a chisel-pointed bar, easy, and the starting cathodes are well trimmed at the same time. At Great Falls the starting sheets are deposited on hard lead from which they may be stripped without the necessity of using grease or oil on the surface. According to Huntington,[3] the lines of crystallization of deposited metal are at right angles to the surfaces on which the deposit is made; hence in a groove there will be discontinuity of the two sets of crystals and a line of weakness will be developed, a phenomenon resembling the line of weakness in a rectangular

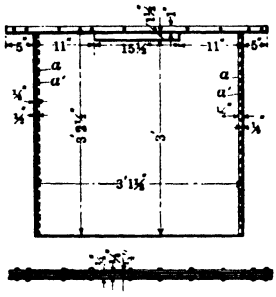

FIGS. 259–260.—Cathode stripping-sheet.

[1] *Eng. Mining J.*, 1906, LXXXI, 853.
[2] *U. S. Patent* 1,498,971, June 24, 1924.
[3] *Eng. Mining J.*, 1905, LXXX, 1109 (photomicrographs).

mechanically from the center of the mold, or by prying after having removed casting in which the crystals arrange and group themselves with their principal axes in lines perpendicular to the cooling surfaces.[1]

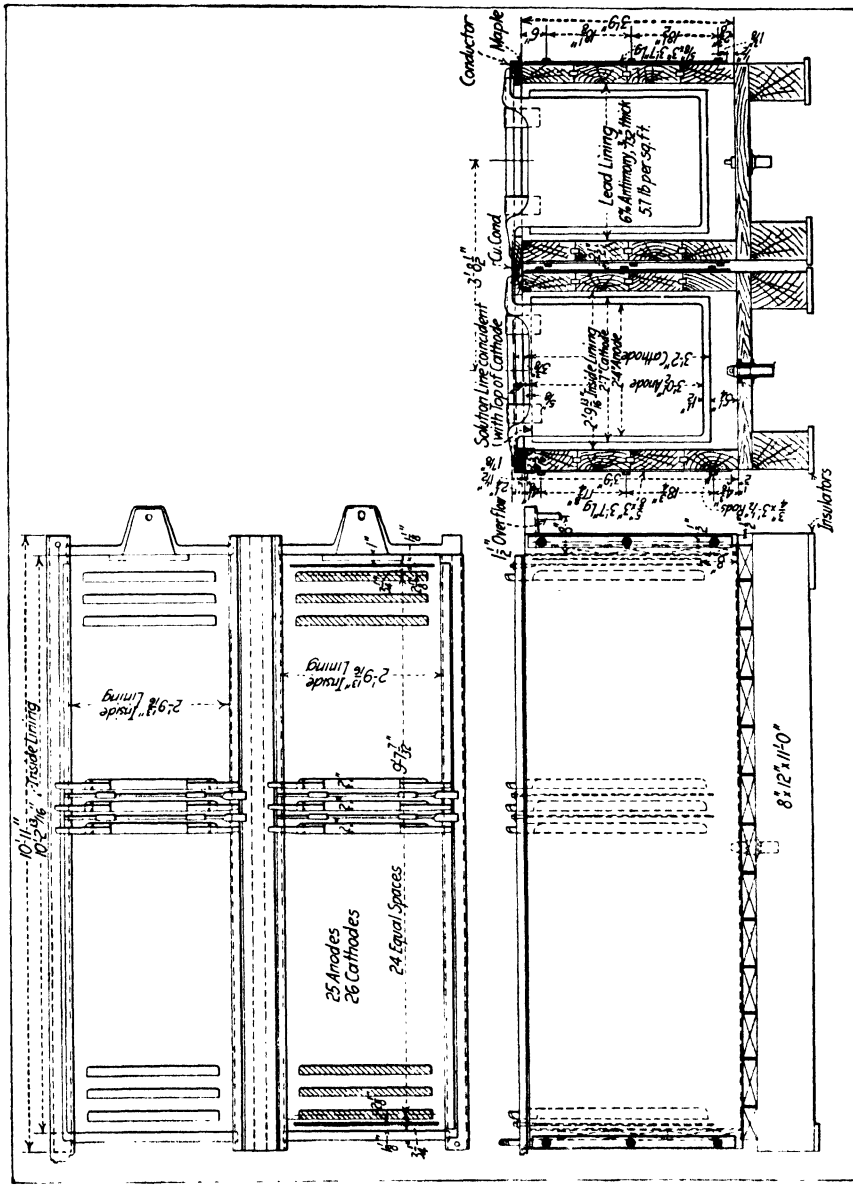

FIGS. 260–262.—Great Falls tanks.

In order to give the thin starting cathodes the tensile strength[2] necessary to carry the weight of the copper to be deposited, it is important that the copper

[1] Microphotographs of WÄSER and KÜHNEL, *Elektrochem. Z.*, 1912, XVIII, 151, 211.

[2] FÖRSTER, *Berg. Hüttenm. Z.*, 1899, LVIII, 473.

be plated out slowly; hence the current density is made lower than in regular work, *e.g.*, one-half at Great Falls. This is accomplished by dividing the current, and by increasing the resistance of the electrolyte, either by reducing the copper and acid content or by adding gelatine to the bath. The ampere efficiency is about 85 per cent.[1] There is provided one starting sheet tank for 6 to 12 corroding tanks. The time required for preparing a starting cathode of a given thickness is ascertained from the fact that 1 amp. per square inch (or 144 amp. per square foot) will give in 1 hr. a deposit 0.008104 in. thick. Ordinarily, it takes one day to prepare a sheet; at Great Falls the time is 12 hr. The cathode is usually made slightly longer and wider than the anode (Figs. 260 to 262) in order to prevent or diminish the formation of excrescences. The cathode extends downward to 6 or 8 in. from the bottom of the tank, in order to leave room for the accumulation of anode mud and for the passage of

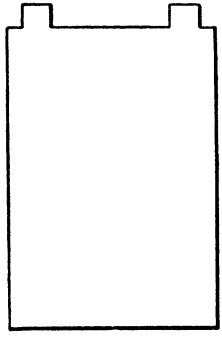

FIG. 263.—Starting-sheet with extensions to be bent over.

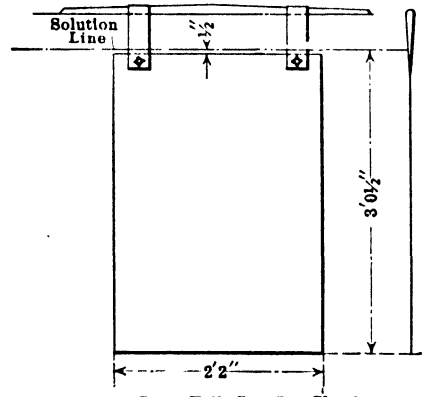

Great Falls Starting Sheet with Morrow Clip

FIGS. 264–265.

the electrolyte; it is about 2 in. narrower than the tank and furnishes a 1-in. space on either side for the electrolyte.

The form of the upper part of a starting cathode depends upon the manner in which it is suspended from its cross-bar. This is always of copper, usually 1 in. in diameter and flattened at the ends to furnish the necessary contact surface. Formerly, the cathode was a rectangular sheet of which one end was bent 180 degrees and hooked on the bar; at present there are usually two strip-like extensions at the suspension end, as shown in Fig. 263, by means of which the cathode is connected with the cross-bar. Ordinarily, the strips are made sufficiently long to serve as flat hooks after having been bent 180 deg. At the former plant in Anaconda, the upper rim of the small (11 by 33 in.) starting sheet used to be bent and clamped over the ends of a loop of sheet copper, 11 by 4.5 in., by a machine similar to one used in making stove pipe. At Great Falls and Perth Amboy (Raritan No. 2), the Morrow clip (Figs. 264 to 265) is in use.

[1] Table by BURNS, *loc. cit.*

A loop of deposited copper is fastened to the starting sheet by a machine which on one side punches a hole through the loop and sheet, bends over the protruding ends at the opposite side, and forces them down. At Maurer, N. J., two holes are punched through loop and sheet to insure against accident. Whatever may be the manner in which the starting cathodes are suspended, care must be taken to have them straight before they go into an electrolyzing tank; after having been in a tank for two days, they are taken out singly, placed on an inclined wooden plane, held on a movable wooden support, and straightened with suitable wooden beaters.

The cathodes of a tank are removed together by means of an overhead electric crane after seven to fourteen days, sprayed or dipped into hot water, and then deposited on a transfer car to go to the refining furnace to be melted, fire-refined, and cast. The cast copper generally shows an electric conductivity lower by 1 to 1.5 per cent in comparison with the cathode copper.[1] This is due to occluded electrolyte and anode mud, which are practically harmless as they exist in the cathode but are reduced during the melting and contaminate the copper. There is a further deterioration due to the absorption of impurities, principally sulphur from the furnace gases.

242. Manipulation of Electrodes.[2]—An electrolyzing tank holds at present 28+ anodes and one cathode in excess of the number of anodes; as many as 60 electrodes are permissible. Formerly, each electrode was handled by itself; at present the anodes of the tank are charged and removed together, as well as the cathodes. Thus, as already indicated, the anodes for a tank are stacked upright on a skeleton transfer car (Figs. 256 to 258), which is hauled by steam or electric locomotives to the tank house. Here they are raised together by an overhead electric traveling crane, transferred to the tank for which they are intended, and lowered (see Fig. 266). The remains of the corroded anodes of a tank are removed in the same way, transferred to a washing tank, where they are brushed to free them from anode mud, and removed to the anode furnace room.

The starting sheets, prepared in a division of the tank house, are also stacked, taken by the crane, and lowered in the tanks. The finished cathodes are handled similarly (see Fig. 267). At Great Falls the cathodes are first dipped into water and drained, then 30 per cent of the sheets making up a charge are dipped into milk of lime and allowed to dry. The coat of lime protects the plates from the sulphur in the fire gases while melting.

The electrode distance is usually about 4 to 4½ in. center to center of anodes. The larger figure will be found with anodes that are impure or that run high in precious metal. If the distance is too small, fragments of copper, anode mud, excrescent growths, etc. tend to bridge the space and cause short-circuiting; if it is too large, there is an unnecessary increase in resistance, less copper is deposited, and electric energy is lost by being converted into heat. The fall in potential between anode and cathode is about 0.3 volt.

[1] EMRICH, *Trans. A. I. M. E.*, 1912, XLIII, 453.

[2] Editor, *Eng. Mining J.*, 1911, XCII, 50.

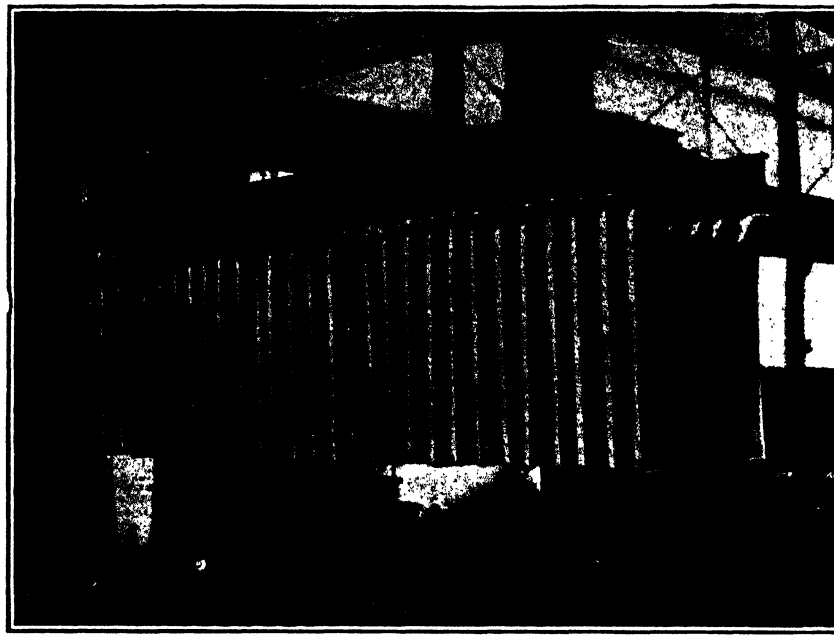

FIG. 266.—Method of handling anodes.

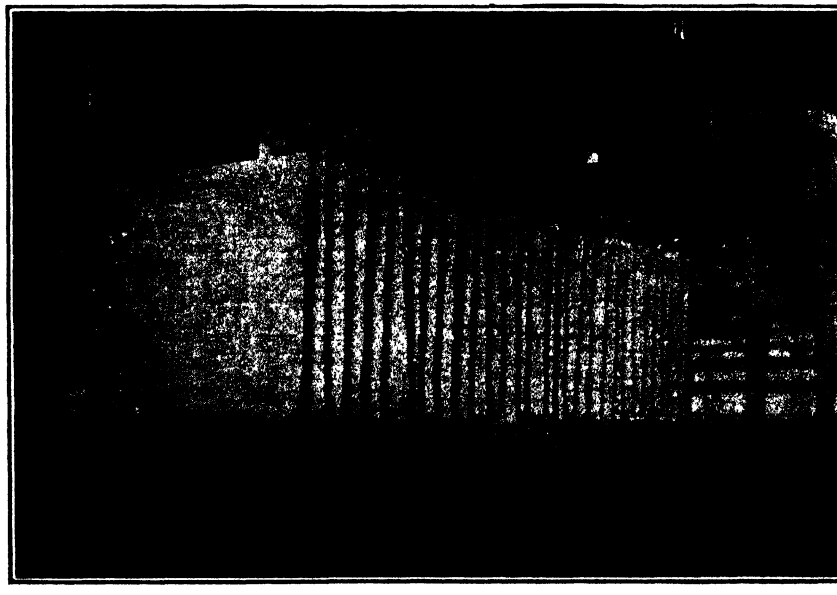

FIG. 267.—Method of handling cathodes.

243. Depositing Tank.—Formerly, the depositing tanks were arranged in single rows (Figs. 247 to 248). The tanks (Fig. 268) were built almost universally of 3-in. planks connected by rabbet (*a*), tongue and groove (*b*), or feather (*c*), joints; threaded tie rods (*d*) passed at the ends through the projecting side planks (Figs. 260 to 262). This method is still common with tanks that stand isolated. Sometimes the tanks used to be coated with asphalt, rubber, or some other impervious paint; but more generally they were, and are today, lined with 6- or 8-lb. lead which extends over the top to prevent the wood from absorbing the electrolyte.

In the newer eastern plants of the United States, the Walker tanks and their arrangement in blocks have met with general favor.

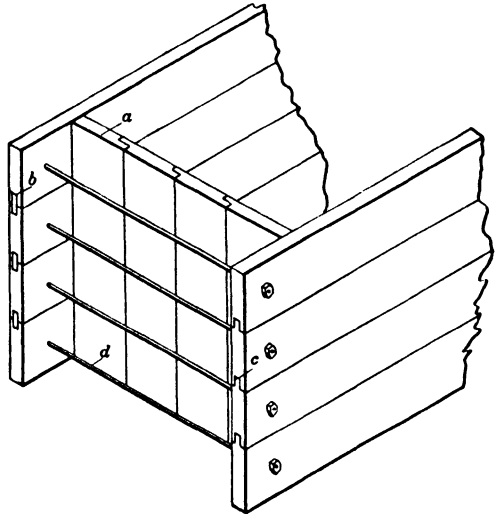

FIG. 268.—Depositing tank.

The details of the tank construction at the Raritan works are given in Figs. 269 to 273. The inner boards are only 1.75 in. thick, the outer planks the usual 3 in.; both boards and planks are connected by feather joints. In a block two adjoining tanks are separated by an open space 1.75 in. wide with airholes for ventilation; three tie rods pass through such a space tying channel-iron buckstays, while in the two outer tanks of a block the rods are placed in openings drilled through the planks. The side walls do not extend to the top of a tank, but are mortised in a cap, 9.25 in. high by 5.25 in. wide, which carries a maple board, 7⅞ by 1½ in., supporting a triangular bar, 1⅛ in. at base; the strong cap carries the large weight of the electrodes. The tanks rest on longitudinal sills, 8 by 8 in., standing upon insulating glass plates, 14 by 14 by 1 in., carried on 12 by 12-in. brick posts laid in cement. A tank bottom and sides are usually lined with ½-in. boards, placed lengthwise, to protect the lead lining from falling pieces of anode and from being cut while charging or discharging. At each end of the tank is a cross-board, held in place by brackets, which prevents the longitudinal boards from being floated.

Figure 274 illustrates the suspension of the electrodes in the Walker system.

Whitehead has patented a method[1] by which the number of electrode contacts is reduced and the current efficiency correspondingly increased. His arrangement is shown in Figs. 275 to 277. The principal feature is that the cathode bars of one tank rest directly on the anode lugs of the adjoining tank

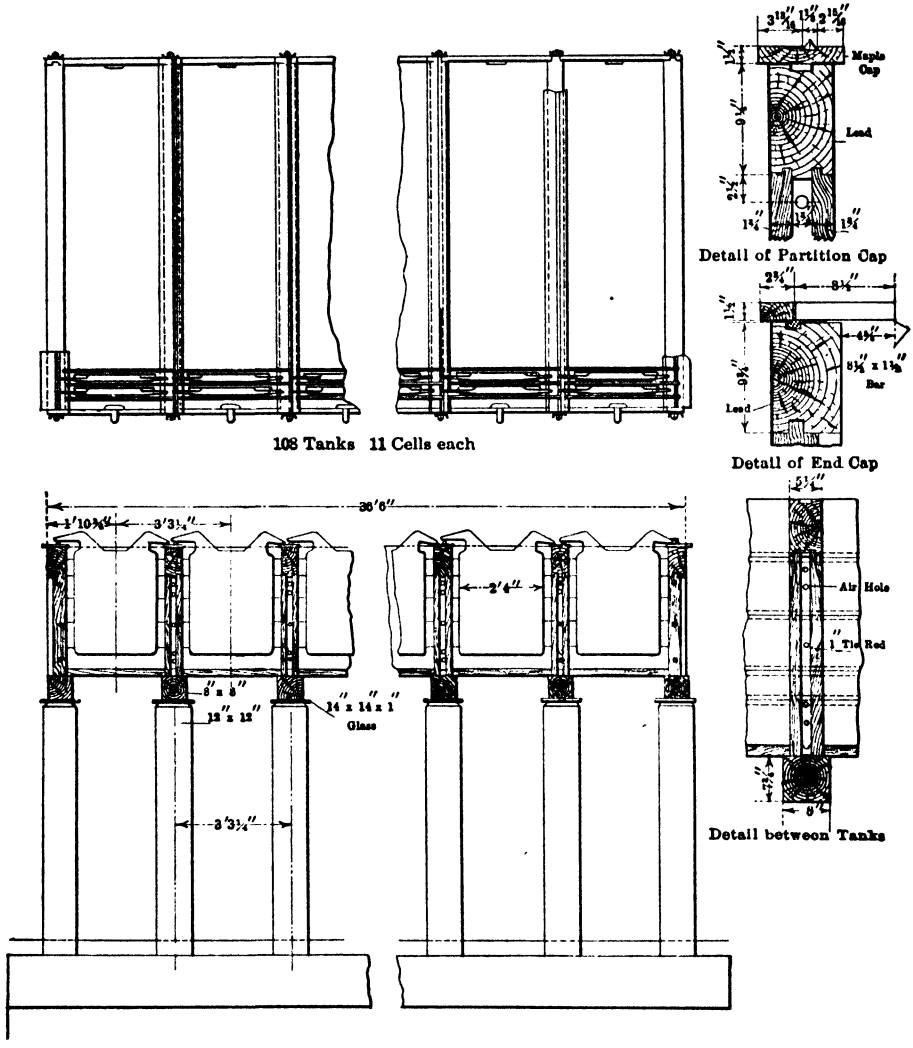

FIGS. 269–273.—Walker system of depositing tanks.

instead of both resting side by side on a common busbar as in the Walker system. A notch in the cathode bar fits over a projection on the anode lug, as indicated in Fig. 277, and gives a good contact.

This system not only cuts down the number of contacts, but also makes the intermediate busbars unnecessary, thus saving copper.

[1] U. S. Pat. Nos. 1206963, 1206965 (1916).

The length of a tank depends on the number of electrodes it is to hold and their spacing. A common figure is perhaps 10 ft. with 20 to 22 anodes; at

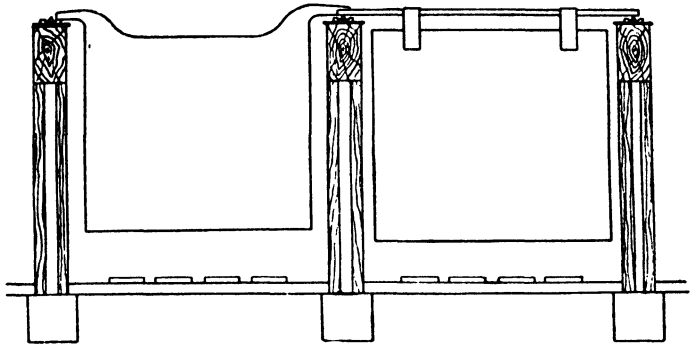

FIG. 274.—Electrodes suspended by Walker system.

Chrome[1] there are at present 26 anodes in a tank. The width and depth vary with the size of the electrode. Ordinary dimensions are 2 ft. 8 in. and 3 ft.

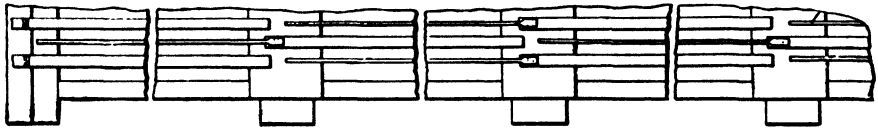

FIG. 275.—Electrodes suspended by the Whitehead system.

9 in.; in recent years[2] anodes have been increased from 3 ft. wide by 2 ft. deep to 3 by 3 ft., which increases the necessary depth of tank by 12 in.

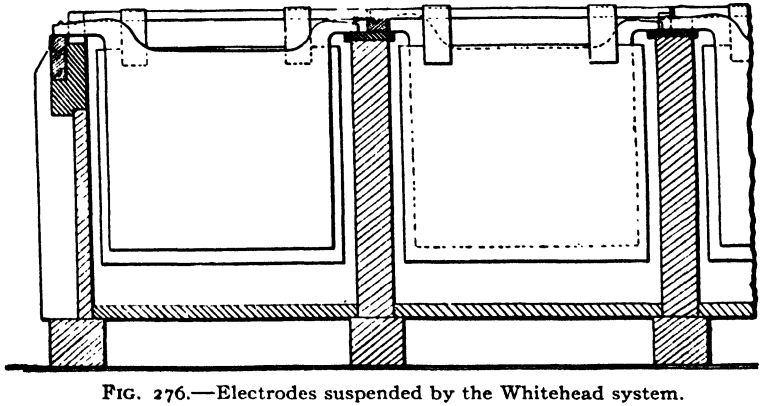

FIG. 276.—Electrodes suspended by the Whitehead system.

In all modern plants the tanks are placed on piers, so as to leave head room of about 9 ft. beneath for ventilation, discovery of leaks, etc.

[1] WALKER, *Mineral Ind.*, 1910, XIX, 218.
[2] WALKER, *Eng. Mining J.*, 1911, XCI, 41.

The basement floor is made acidproof by being built of chemical brick with joints filled with pitch; it slopes toward troughs ending in a sump.

A common electric connection of the depositing tanks is shown diagrammatically in Figs. 247 to 248. It is typical for tanks arranged in single rows. The advantage is ready accessibility of contacts; the disadvantages are requirement of much floor space, an excessive amount of copper is tied up, and twice as many contacts have to be kept bright as is necessary in the single-busbar arrangement. The Walker system is the one favored in eastern refineries, as it gives a good contact, and locks up the least copper. The bars have to be well insulated from the tanks; their supports are therefore made non-conductive by soaking wood in paraffine or similar substance, or by using glass. The cross-sectional area of a bar depends upon the amount of current that is to pass through it. With rectangular bars 1 sq. in. for 300 amp. used to be the standard; this was raised to 550 amp., but even with 1,000 amp. they remain sufficiently cool; with triangular bars 400 amp. at the contact gives no trouble.

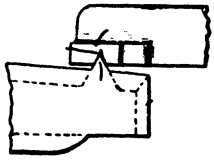

FIG. 277.—Electrode contact in the Whitehead system.

The cross-bars from which the electrodes are suspended are usually rectangular bars of copper, but are sometimes round rods 1 in. in diameter, flattened at the ends. Formerly, they were made of soft steel copper-plated.

244. Corrosion of Anode.—According to their places in the electrochemical series, the metals electropositive to copper ought to go into solution before the copper, but with an anode of 98 per cent Cu and over there can be only a tendency in this direction. On the surface the more positive metal will be dissolved first, but the copper will follow closely. As the positive impurities as well as the Cu_2O are not evenly distributed, and parts of an anode will have cooled more quickly than others and become harder, the anode will not be evenly corroded; corrosion pittings or hollows form; the free acid also acts chemically, especially at the contact of copper, electrolyte, and air. The result is that the anode becomes honeycombed, and even spongy if it was impure. Particles of copper fall off and collect in the anode mud. The purer the anode the more even the corrosion. Usually the anode is removed in from 3 to 4 or 5 weeks, *i.e.*, before parts have become so thin that there is danger of a piece falling and thereby injuring the bottom lining of the tank or causing a short-circuit, or both. In most cases the bottom of a tank is protected by boards (page 376). The weight of the corroded anode which goes back to the anode furnace amounts to about 10 to 15 per cent of the original anode. Such anode scrap is placed in a hot-water tank and scrubbed with long-handle brushes to remove adhering anode mud.

245. Deposition on Cathode.—The purity of the cathode copper depends upon the purity of the anode, the slowness of deposition, the constancy of current, the composition, clarity, temperature, and circulation of the electrolyte, and lastly upon the prevention of anode matter coming mechanically in contact with the cathode. With a low current density the surface is crystal-

line,[1] solid, free from pinholes, blisters, streaks, etc. With the usual high current density, the deposit, smooth at first, soon becomes rough, shows knobs, especially near the edges, unless a daily addition of a very small amount of glue, 1 per cent to about 10,000 cubic feet of electrolyte, is made, which keeps the deposit smooth until the copper content of the electrolyte falls below 2.5 per cent. This is accomplished, however, at the expense of voltage, which grows, probably on account of an increased transfer resistance. The increase in voltage may reach 20 and even 30 per cent with the usual extremely small amounts of glue charged.

In working with an insoluble anode, *i.e.*, with a potential of 2 to 2.5 volt, in purifying fouled electrolyte, there are formed at the edges of the cathode large crystals,[2] as shown in Fig. 278.

FIG. 278.—Electro-deposition crystals of copper.

The deposition of copper in the form of tube, sheet, or wire is carried out on a large scale in Europe.[3] A discussion of details lies outside of the scope of this treatise.

The impurities in the cathode copper are either electrodeposited or mechanically occluded.[4] Under normal conditions no impurities are electrodeposited. Electrolyte enclosed between coarse crystals of copper does not play an important rôle, but if fouled by 1 per cent As it assists in the reduction of the electric conductivity. Cathode copper rarely contains < 0.001 per cent As. Mechanical contamination from floating slime, easily noticed by the Ag content of the cathode, is the most common source of impurity, as any local disturbance at the cathode may cause some slime to become suspended in the electrolyte, and to be floated to the cathode by electrostatic action.

In general, the Ag content of the cathode is proportional to the anode. The gold loss is about half the silver loss. The relation between precious metal and current density is shown in Fig. 279 (Addicks).

The frequency with which cathodes are removed has already been referred to (page 373). The more frequent this is the less the danger of short-circuiting,

[1] HUNTINGTON, *Eng. Mining J.*, 1905, LXXX, 1109.

[2] ADDICKS, *Electrochem. Met. Ind.*, 1905, III, 267.

[3] COWPER-COLES, *Electrochemist and Metallurgist*, 1904, III, 411; *Engineering Rev.*, 1905, XIII, 392; *Electrochem. Met. Ind.*, 1908, VI, 412; ELMORE, *Eng. Mining J.*, 1886, XLII, 315; 1888, XLVI, 124; 1890, L, 243; 1891, LI, 355, 463, 465, 713; LII, 238; 1892, LIII, 248; 1900, LXIX, 522; 1904, LXXVII, 197; 1905, LXXX, 35; *Electrochemist Metallurgist*, 1903, III, 150.

[4] EMRICH, *Trans. A. I. M. E.*, 1912, XLIII, 453.

and the higher the efficiency of deposition. When the cathodes of a tank have been raised together, they are allowed to drain, are transferred to a water tank to be dipped, and removed to a transfer car to be hauled to the refining furnace. The tarnished cross-bars are placed in bunches in a pair of suspended hooks, and washed in hot water by raising and lowering with a compressed-air cylinder. The round places for the loops are polished on an emery wheel, and the flat ends on an emery board.

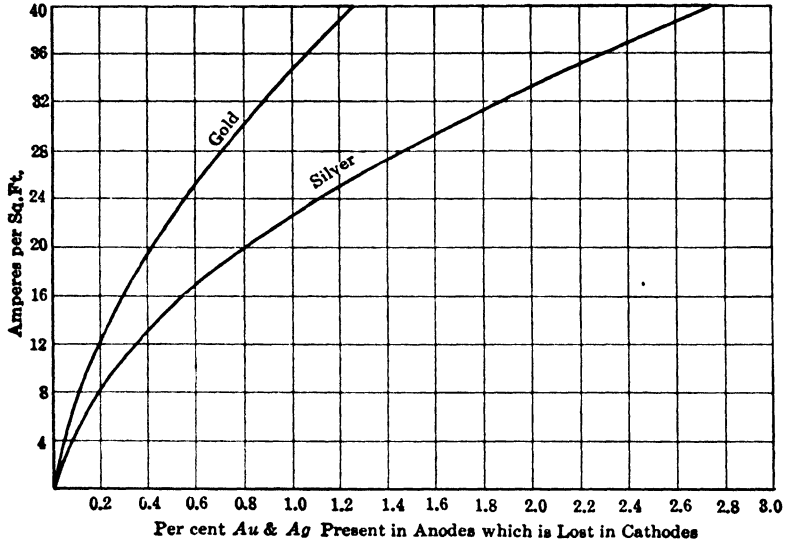

FIG. 279.—Relation between current-density and precious-metal losses (Addicks).

246. Anode Mud.[1]—The insoluble residue formed in refining is a black, slimy mass which amounts to 1 to 3 per cent of the weight of the anode after coarse particles have been removed by passing through a 40-mesh screen. As practically all the 40-mesh material will pass through a 200-mesh screen, there is no necessity of using a screen finer than 40-mesh to separate metallics. The composition of the mud varies considerably with the character of the anode. Analyses are given in Table CI. Slime from Montana is likely to run high in Te, that from Arizona in Se.

When anode mud has collected in sufficient quantity in the tanks of a cascade to be removed, these are cut out of service. The anodes as well as the cathodes of the lowest tank are removed with the overhead electric crane. The electrolyte is allowed to clarify for about 1 hr., and then drawn off either by siphons or through an opening in the side of the tank. The plug in the bottom is now drawn out and the slime sluiced out through a communicating trough into a stationary tank or movable slime buggies. The plug is replaced, the electrolyte from the next higher tank is drawn off into the one just cleaned, whereupon new

[1] ADDICKS, *Mineral Ind.*, 1900, IX, 271, 274; WHITEHEAD, *op. cit.*, 1901, X, 229; KROUPA, *Oesterr. Z. Berg. Hüttenw.*, 1903, LI, 173; BETTS, *Electrochem. Met. Ind.*, 1905, III, 141; KERN, *Met. Chem. Eng.*, 1911, IX, 417.

TABLE CI.—ANALYSES OF ANODE MUD

	Great Falls, Montana			Raritan, No. 2, Perth Amboy, N. J.		New Jersey		Baltimore		General U. S.		Kosaka	Great Cobar	General Range
Cu	12.90	14.80	43.3400	12.86	12.26	.....	.....	11.0100	13.820	25	20	6.281	46.8	15 to 55
Ag	53.29	57.00	17.1870	26.58	53.68	37.83	37.08	53.8940	55.150	40	40	26.3708	15.5	5 to 50
Au	.....	.....	0.1200	0.36	0.28	2.24	2.17	0.2959	0.198	2	1	0.2602	1.5 to 4.0	0.02 to 0.70
Pt	.....	.....	0.000166	.....	.....	.....	.....	.....	.....	.....	tr.			
Pb	tr.	5.26	0.7600	10.94	3.58	5.20	5.10	0.9100	2.070	18(incl. SiO_2, SO_3, etc.)	2	12.965	.....	0.5 to 6.0
Sb	3.30	2.00	3.4600	16.21	6.76	8.00	8.32	6.2500	2.440	10	4	.....	.....	2 to 8
As	1.15	2.60	3.0300	7.13	5.42	5.30	4.90	2.1070	1.090		4	.....	.....	1.5 to 6
Bi	1.55	5.70	0.1100	1.62	0.45	.....	.....	3.9300	0.340	.....	2	.....	0.7	0.2 to 8
Ni	.....	.....	0.0800	0.90	0.30	0.75	1.00	.....	.....	.....	3			
Co	.....	.....	0.0060											
Fe	.....	.....	0.3640	0.17	0.14	.....	.....	.....	0.800	.....	.....	.....	.....	0.5 to 1.5
Zn	.....	.....	0.0900											
Se	.....	2.0	1.2000	3.82	2.30	2.40	2.00	0.3940	0.718	5	4	.....	0.65	0.1 to 2.5
Te	.....	1.0	2.1000	4.10	3.56	1.00	0.70	1.1740	0.892		3	.....	.....	0.1 to 3.5
Si	.....	.....	0.1770	0.93 SiO_2	0.93 SiO_2									
SO_3	11.96	.....	13.2100 S	1.73 S	1.15 S	.....	.....	5.2680	10.680	.....	4 S	.....	2.2 S	0.5 to 12
Cl	.....	.....	0.0260											
H_2O (250° C.)	.....	.....	.....	.....	.....	.....	.....	2.3650	2.604					
C	.....	.....	0.0590											
References	(a)	(a)	(b)	(c)	(d)	(d)	(g)	(e)	(c)	(f)	(g)	(h)	(i)	(j)

(a) BETTS, *Electrochem. Met. Ind.*, 1905, III, 142. (b) BURNS, *Trans. A. I. M. E.*, 1913, XLVI. (c) ALRDICH, private communication, 1912. (d) Private communication, 1912. (e) KELLER, *Mineral Ind.*, 1897, VI, 238. (f) ADDICKS, *J. Franklin Inst.*, 1905, CLX, 424. (g) ADDICKS, Private communication, 1912. (h) Private communication. (i) KERN, *Met. Chem. Eng.*, 1911, IX, 417. (j) CLARK, *Met. Chem. Eng.*, 1912, X, 121.

electrodes are put in place. The total operation lasts from 5 to 8 hr., according to the number of tanks.

The slime is screened through a coarse copper sieve (8-mesh) to remove particles of anode copper, and then through a 40-mesh screen; a centrifugal machine with bronze screen does the work quickly and effectively. In large works where much mud has to be handled, the stationary tank for receiving the mud from the mud troughs may be a copper or bronze revolving drum.

247. Treatment of Anode Mud.—The screened mud from the electrolytic tanks may contain, exclusive of the entrained electrolyte, varying amounts of Cu, Ag, Au, Ag_2Se, Ag_2Te, Cu_2Se, Cu_2Te, $PbSO_4$, compounds of As, Sb, and Bi, and in isolated cases Ni.

The first step in treatment is to remove as much as possible of the electrolyte by settling and decantation followed by filtering, using lead-lined apparatus. The electrolyte is returned to the tank house and the filter cake given further treatment to recover various valuable constituents.

The methods for treating the caked slimes may be classified under two general heads with subdivisions.

I. Treatment without Removing the Copper

(*a*) *Direct Smelting.*—This is carried on in a reverberatory furnace with movable hearth fired with two oil burners. The oval hearth is 8 ft. long, 6 ft. wide, and 10 in. deep; consists of a cast-iron bed plate and a ⅜-in. wrought-iron ring; and is rammed with a mixture of 2,800 lb. dolomite, 1,800 lb. cement, and 1,150 lb. fire clay to a thickness at the sides, front, and back of 12 in. and at the bottom of 4 in. The side lining encloses a 2-in. water-cooled pipe. The stored mud is stirred up, drawn into a pressure tank, and filtered in a press 3 ft. in diameter with 14 plates. The filtrate passes through 8 settling tanks placed in series, which collect any mud that may have passed through the cloth, and flows into the storage tank of the tank room. The 3-in. cakes are discharged into a car, to which is added soda ash and siliceous ore rich in precious metal. The mixture is fed into the furnace at intervals at the sides near the burners; the slag flows off at the front. A furnace treats in 24 hr. about 5 tons of mud, burns 500 to 600 gal. oil, makes 2.5 tons slag, 0.5 ton flue dust and doré silver, 0.820 to 0.860 fine. The slag goes back to be smelted, the silver is further purified in a lead cupeling furnace, and the flue dust is passed through a suspended sheet-iron oval flue (4 by 3 ft. and 200 ft. long) with discharge doors, in which the temperature is reduced to 125° C. before the gases enter a wet scrubber which collects most of the remaining dust and fume. The collected dust is treated in the dry way, by mixing with litharge and smelting in a reverberatory furnace, or in the wet way (see below).

Direct fusion is applicable only in a refinery that is connected with a lead plant to take care of the intermediary products. In general, it is not considered good practice today.

(*b*) *Lead Soaking.*—The filter-pressed cakes of slime are partly dried and charged in paper bags, from 10 to 15 lb. at a time, onto the lead bath of a cupel-

ing furnace, when the copper and other impurities are readily oxidized and scorified. As coppery litharge has a strongly corroding effect, the cupel should be water-jacketed and in addition lined with magnesite brick. It is better practice to leach out the copper before using this process.

II. Treatment after Removal of Copper

(*a*) *Removal of Copper by Agitating with Air in a Solution of* H_2SO_4 *and* $NaNO_3$.—This process is carried out using a hot solution and agitating until the copper is oxidized by the air and niter and dissolved by the acid. The residue is then treated in doré furnaces as described under (*b*). This method has been largely replaced by substituting oxidation by roasting.

(*b*) *Removal of Copper by an Oxidizing Roast Followed by Leaching with* H_2SO_4.—This is the method usually followed in modern refineries. The caked slime from the filters is roasted at 300 to 400° C. for about 12 hr., which converts the copper to CuO. The roasted product is then treated in convenient lots (about 1,000 lb.) in lead-lined agitators with hot H_2SO_4 solution containing about 15 per cent free acid. The resulting $CuSO_4$ solution is passed over metallic copper to precipitate any Se and Te which may have been dissolved and is then returned to the tank house.

The residue from the acid treatment containing less than 1 per cent copper may be treated by either of two methods. If the plant is a combined lead and copper refinery, it is customary to add the dried slime to the cupels, as described above under "Lead Soaking." The second and more usual method is to smelt the wet cakes in a small reverberatory furnace (10 by 6 ft. at one plant) with suitable fluxes. This reverberatory is commonly called the doré furnace. The treatment will take about 40 hr. for 20,000 lb. of wet slime. If the slimes contain much lead, the first skimming will be mainly litharge, resulting from melting in an oxidizing atmosphere. Niter flux from a preceding charge is then added and the slag, which is skimmed goes to the anode furnace (3,000 oz. per ton) or the ore furnace (1,000 oz. per ton). There forms on the metal bath a dark cherry-colored selenide of copper and silver (Cu 33, Ag 33, Se 33 per cent), which is oxidized by rabbling and by forcing air through the bath by means of an iron pipe.

The flue dust collected, rich in precious metal, contains from 30 to 50 per cent Se and Te, both of which are recovered. To the bath is added soda ash to purify the metal. The slag formed is skimmed, and fresh flux is added until the slag ceases to become dark, whereupon soda ash and niter are charged to fine the silver. After the first 13,000 lb. of decopperized anode mud have been thus treated and a bath of more or less pure silver has been obtained, more mud is charged and refined until the furnace has received its complement of 22,000 lb. mud, the total treatment of which takes four and one-half days and furnishes 7,000 lb. doré silver.

248. Products from the Doré Furnace.—Addicks[1] gives (Table CII) the analyses of slimes and various products of a doré furnace. The percentage of

[1] "Copper Refining," 1st ed. 1921, p. 112.

different products plus volatile matter and minus fluxes is about as follows: first slag 25 to 30 per cent; second slag, 15 per cent; doré bullion, 30 per cent; flue dust, 20 per cent. It will be noticed that most of the gold goes directly to the doré metal, while a considerable slag loss of silver is suffered. The first slag is added to the charge in the anode furnace, while the second slag, which contains soluble sodium salts of tellurium and selenium, may be leached with water to recover these elements. The silver-bearing residue is then charged to the anode furnace.

TABLE CII.—ANALYSES OF DORÉ FURNACE PRODUCTS

	Slimes	First slag	Second slag	Doré	Flue dust
Copper	2.39	4.25	7.90	1.34	0.1
Silver	40.0	4.03	3.31	96.345	5.0
Gold	0.767	0.041	0.0041	2.37	0.017
Nickel	1.94	7.58	1.02	0.0065	
Arsenic	2.34	1.593	0.73	0.0075	2.65
Antimony	5.91	11.34	3.30	0.0084	10.9
Bismuth	0.343	0.5378	0.64	Trace	
Sulphur	2.80	0.264	0.90		
Iron	0.23	5.63	3.88	0.1233	
Lead	5.43	6.14	2.78		
Selenium	11.89	1.58	11.06	0.0020	35.0
Tellurium	5.45	1.80	19.36	0.0068	1.5
Zinc	Trace	Trace	Trace	None	
Silica	4.25	19.90	2.26		
Alumina	.....	4.93	2.15		
Magnesia	.....	1.604	1.31		
Lime	.....	1.075	0.18		

The leaching of the soda slag removes only about half the selenium and tellurium and the return of the leached residue to the anode furnace tends to build up these elements in the circuit. Attempts are being made to treat this slag in a special furnace for the removal of the selenium and tellurium by volatilization.

249. Treatment of Doré.—The bullion from the reverberatory furnace containing the precious metals is cast into plates 21 by 19 in. by ¼ in. and parted either by the electrolytic process or by boiling in sulphuric acid.

In the electrolytic process either the Thum or the Moebius system may be used. The cells for the Thum system (Figs. 280 to 281) are of glazed porcelain or acidproof stoneware 4 ft. long and 2 ft. wide with a sloping bottom. The depth at one end is 8½ in. and at the other 6¾ in. The cathode is a carbon plate, which covers the bottom; the doré silver serves as the anode and is held in a wooden rack lined with cotton cloth. The rack is supported on the sides of the cell and dips into the electrolyte. The electrolyte usually contains 60 grams per liter of Ag as $AgNO_3$, and 20 to 40 grams of Cu as $Cu(NO_3)_2$. Owing to the possibility of dissolving impurities from the anode no free acid is used. The current density is 40 to 50 amp. per square foot and the potential 2½ to 3 volts. In operating, the silver is deposited on the carbon in a loose granular

form, which permits easy removal by means of rakes. The gold and platinum remain as a black mud on the cloth lining of the baskets.

The principle of the Moebius system is the same, but the doré anodes surrounded by cotton bags are suspended vertically in the electrolyte alternating with silver cathodes. Mechanically operated scrapers remove the silver crystals from the cathodes, allowing them to drop into trays in the bottom of the tanks. This method saves space and permits of slightly higher current density but is not so conveniently operated.

In acid parting, the granulated doré silver is boiled with 66° sulphuric acid in cast-iron pots. The silver with any platinum and palladium goes into solution and the gold remains as a residue. The silver, platinum and palladium are precipitated on scrap copper and if enough platinum and palladium are present the precipitate is cast into anodes and electrolyzed, recovering them in the slime. This process is not commonly used in copper plants today.

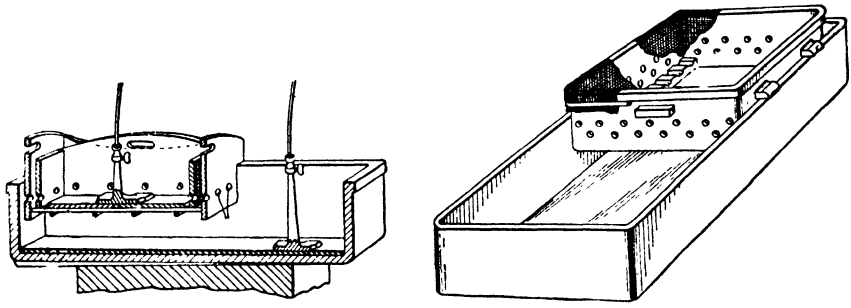

FIGS. 280–281.—Thum parting cells.

250. Recovery of Silver.—The silver from the parting process is melted in a special furnace and cast into standard 1,000-oz. bars for the market. It runs 999+ fine.

251. Treatment of the Gold Slime.—The slime remaining from the electrolytic parting process may contain gold, platinum, palladium, and some residual silver. It may be boiled with H_2SO_4 and KNO_3, which removes the silver and platinum metals leaving the gold, which is washed, dried, fused, and shipped. The silver is then precipitated by scrap copper and the solution worked up for platinum and palladium.

Another method of treating the gold slime is by the Wohlwill process. The slime is melted and cast into anodes which are electrolyzed in stoneware cells. The electrolyte contains from 80 to 125 grams per liter of gold as chloride and 125 grams per liter of free HCl. It is used at 65 to 75° C. The cathodes are rolled gold and the current density is about 100 to 110 amp. per square foot at 1 volt. The gold deposits on the cathode, the silver is precipitated as chloride, and the platinum and palladium enter the electrolyte, from which they may be recovered periodically, usually when they reach a combined concentration of about 50 g.p.l.

252. Recovery of Platinum and Palladium.— The solution containing these metals is treated with NH_4Cl and HNO_3, which precipitates them as NH_4PtCl_6 and NH_4PdCl_6. These compounds are filtered, dried, and reduced to metal.

They are parted by dissolving in aqua regia, boiling with HCl to drive off excess HNO_3 and reduce the palladium, and adding NH_4Cl. This precipitates the platinum as NH_4PtCl_6 and leaves the reduced palladium in solution. After filtering off the platinum salt, nitric acid is added to the solution oxidizing and precipitating the palladium. Each is then reduced to sponge metal and marketed.

253. Treatment of Flue Gases.[1]—It is general practice to pass all fumes from the furnaces treating anode mud and by-products through cooling flues and scrubbers and then to Cottrell precipitators. The installation at the United States Metals Refining Co., Carteret, N. J., will serve as an example. It is illustrated in Fig. 282. There are three units, each capable of handling 4,000

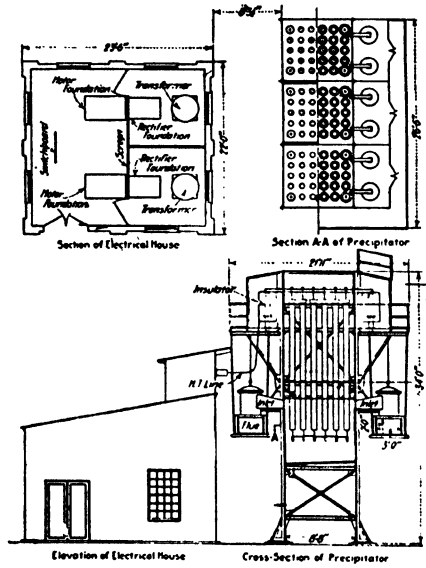

FIG. 282.—Cottrell equipment at Carteret, New Jersey.

cu. ft. gas per minute with a velocity of 7 ft. per second at 50 to 70° C., but the quantity and velocity may be doubled with a slight loss of efficiency. All parts of the precipitator coming in contact with gases are lined with the highest quality lead. The lining is attacked if even small quantities of antimony are present.

Each unit contains 30 pipes 16 ft. long. The four corner pipes are 11 in. in diameter and the others 8 in. The precipitate which collects on the pipe is periodically washed down with water. During the washing of a unit the power is shut off and the gases directed to the other units. Power is furnished by two motor-generator sets delivering current at 220 volts and 113 amp. This is transformed to 65,000 volts and rectified by a mechanical rectifier.

The operation of the precipitator is efficient and only slight fume losses occur.

TABLE CIII.—ANALYSES OF FLUE DUST AND SCRUBBER SLUDGE FROM REFINING ANODE MUD

	As	Sb	Se	Te	Cu	Pb	Bi	Ag	Au	SiO_2	FeO	CaO	Ni	S
Flue dust.....	4.80	13.90	5.20	3.10	1.00	0.70	....	4.018	0.002					
Flue dust.....	9.00	25.30	3.00	1.60										
Scrubber sludge...	12.18	39.01	4.50	3.00	0.61	9.34	2.88	1.98	0.103	0.35	8.10	0.40	trace	0.97

[1] SMITH and HEIMROD, *Chem. Met. Eng.*, 1919, XXI, 360.

254. Recovery of Selenium and Tellurium.[1]—There are five principal sources of selenium and tellurium in the products from treating anode mud. Any or all of these may be utilized, depending on market conditions. The first source is the niter slag from the doré furnace, the leaching of which has already been referred to. Considerable selenium and most of the tellurium come from this source. The second source is the water used for scrubbing the flue gases from the refinery furnaces. If this water is recirculated, it takes up considerable water-soluble selenium. The third source is the flue dust and filter-pressed sludge from the scrubbers, which is roasted at a low heat to volatilize the selenium. This condenses in a chamber as water-soluble crystals of selenious oxide (SeO_2). Sources four and five are, in reality, modifications of three. In four, the dust is leached with hot water instead of roasting as in three. In five, the water-leached dust is treated with sulphuric acid and an oxidizing agent, such as sodium chlorate or chloride of lime, which oxidize and dissolve the selenium.

The combined solutions from all sources are then treated with H_2SO_4, which destroys the excess alkali and precipitates white tellurious oxide (TeO_2). Care must be taken to avoid an excess of acid, which dissolves TeO_2. The precipitated TeO_2 is settled and filtered and, if the market warrants it, may be reduced to Te by charcoal or dissolved in HCl and precipitated by SO_2.

The Se is precipitated from solution by SO_2. For this purpose a deep lead-lined tank (or barrel) is used. The solution is brought up to about 10 per cent free H_2SO_4 with sometimes a small amount of HCl and SO_2 bubbled through it. The Se is precipitated as a red slime which, after washing and drying on steam coils, changes to a black powder which is ground and shipped.

255. Foul Solutions.[2]—The electrolyte in time becomes overcharged with impurities, such as As, Sb, Bi, Ni, Fe, which interfere with the quality of the cathode deposit, and with the blue vitriol, which is recovered by crystallization. A fouled electrolyte from Great Falls[3] contained per liter, Cu 51.8, Fe 13.2, As 14.02, Sb 0.62, H_2SO_4 48 g.; the low percentage of Sb is due to the addition of enough HCl to the head tank to maintain 0.04 g. Cl per liter in the solution.

There are two general methods for purifying the electrolyte; one is direct removal of impurities by precipitation, the other withdrawal of part of the foul electrolyte and its replacement by blue vitriol and the necessary free H_2SO_4 while the foul solution is being treated.

The direct removal of impurities by precipitation has not been sufficiently successful in practice to become adopted. Thus, boiling with metastannic acid in order to precipitate As; filtering through oxidized granulated copper to throw down Sb and Bi; blowing air through the solution heated to 35° C. and over, to oxidize $FeSO_4$ and cause it to fall out as a basic ferric sulphate, accompanied perhaps by Sb and Bi salts, have all been tried and given up again.

[1] MERRISS and BINDER, *Eng. Mining J.*, 1918, CVI, 443.

[2] ULKE, *Mineral Ind.*, 1897, VI, 239; *Z. Elektrochem.*, 1898, IV, 309; *Berg. Hüttenm. Z.*, 1898, LVII, 264; BURNS. *Trans. A. I. M. E.*, 1913, XLVI.

[3] HOFMAN, *Trans. A. I. M. E.*, 1904, XXXIV, 312.

The general practice is to withdraw continuously 1 or more per cent of the electrolyte from the main stream, purify it, and allow fresh electrolyte or purified solution to flow into the head tank.

The following methods of purification may be considered as covering the ordinary modes of operating:

Crystallization, suited for an electrolyte practically free from Ni.

Crystallization followed by electrodeposition, suited for an electrolyte heavily charged with Ni.

Electrodeposition, suited for an electrolyte lightly charged with Ni.

1. *The Crystallization Method.*—The free acid is neutralized, or rather reduced to below 1 per cent, by dissolving in it granulated copper in the presence of air, vitriolization process (§228). The neutral or slightly acid liquor is concentrated in lead pans by steam coils to 43° Bé. and then crystallized, after which, in the absence of $NiSO_4$, from 85 to 90 per cent of the blue vitriol can be recovered of a sufficient purity to permit re-solution and crystallization for a marketable product. Following is an analysis of impure crystals:[1] Cu 22.78, Fe 0.589, Ni 0.0496, Pb 0.0122, Bi 0.0640, Sb 0.2920, As 0.2470 per cent.

The copper remaining in the mother liquor is recovered in two ways. It is precipitated by Fe with the As and Sb that is present; the first precipitate is kept separate from the last, as this may contain as much as 60 per cent As and form the raw material for the manufacture of arsenical compounds.

In the second method the liquor is concentrated to the point at which both sulphates of Cu and As crystallize together; the crystalline mass, separated from the mother liquor, is treated with just enough water to dissolve the copper sulphate; the residual arsenical salt is suited for the production of copper-arsenic salts.

Drawings of the Sulphate Building of the first electrolytic refining plant of Great Falls, Mont., have been published by Burns (*loc. cit.*).

As regards the separation of $CuSO_4$ and $NiSO_4$ by fractional crystallization, it is held[2] that if an acid solution at 35° C. contains an excess of $CuSO_4$ over a presupposed cryohydrate of $2NiSO_4 + xH_2O$: $1CuSO_4 + yH_2O$, $CuSO_4 + zH_2O$ will separate, but that with an excess of $NiSO_4$ there will be formed crystals of $NiSO_4 + 7H_2O$. The ordinary $CuSO_4 + 5H_2O$[3] gives up 2 molecules H_2O at 28° C., and $NiSO_4 + 7H_2O$ loses 2 molecules H_2O only, at 40° C.

2. *Crystallization Followed by Electrodeposition.*—The electrolyte is concentrated to 42° Bé. in wooden lead-lined tanks with steam coils carried by cast-lead frames. A tank 16 by 15 ft. and 4 ft. 10 in. deep with 350 ft. of 1.5-in. lead pipe will evaporate in 24 hr. 1,000 cu. ft. liquor of 1.240 sp. gr. to 340 cu. ft. 1.460 sp. gr. The concentrated solution is run into a crystallizing tank constructed to cause a rapid separation of crystals. Such a tank 12 by 6 ft. and 4 ft. deep with eight cross-timbers, 6 by 6 in., each carrying eight rows of vertical zig-zag 1-in. water-cooled lead pipes, will cause 82 per cent of the copper to

[1] KELLER, *Mineral Ind.*, 1898, VII, 238.

[2] Private Communication by C. S. Witherell, 1912.

[3] HOFMAN and WANJUKOW, *Trans. A. I. M. E.*, 1912, XLIII, 523.

crystallize in 48 hr. in the form of small crystals, which carry some $NiSO_4$ + aq. The mother liquor goes to the liberating tanks; water is run into the crystallizing tank, steam is turned on, the crystals are dissolved, mud is allowed to settle, and the liquor run to the tank house. The liberating tanks receiving the mother liquor are depositing tanks, with sheet-lead anodes and sheet-copper cathodes, in which all the copper and some of the arsenic are deposited in a sufficiently coherent condition to permit scraping off the deposit with a chisel-pointed bar, and are turned over to the smelting department. A liberating tank has the same dimensions as a depositing tank. There are usually provided 1.5 to 2 liberating tanks for every 100 depositing tanks. The e.m.f. required ranges from 2 to 2.5 volts.

In order to hold back in the bath the choking fine particles of H_2SO_4 which are carried off into the air with the O liberated at the anode, the electrolyte is covered with a layer of oil. In some instances accidents have occurred on account of the formation of AsH_3; hence at several works these tanks are placed in an open shed.

The further treatment of the copper-free solution containing, *e.g.*, Ni 1+ per cent, As 1 per cent, free H_2SO_4 15 per cent, varies somewhat.

The As_2O_5 salts are first reduced to the As_2O_3 stage with SO_2 gas by allowing the solution to run down one covered cascade in which the gas ascends, and then As_2S_3 is precipitated by H_2S in a second cascade. The arsenic-free solution is concentrated in a series of lead pans (twelve, 6 by 4 ft. and 13 in. deep) followed by iron pans (four round-bottomed of the same dimensions), with the fireplace beyond the last iron pan. The fire gases pass under the iron pans and then under the lead pans, while the liquor flows in the opposite direction leaving the last iron pan at a concentration of from 72 to 75 per cent free H_2SO_4 to be collected in an iron pan where, upon cooling, $NiSO_4$ contaminated with 1 to 2 per cent $FeSO_4$ falls out. The nickel-free acid goes to the tank house. The $NiSO_4$ and $FeSO_4$ are dissolved in H_2O, the $FeSO_4$ is oxidized with $CaOCl_2$ in the cold and precipitated with $CaCO_3$. The purified $NiSO_4$ is evaporated to dryness in a pan, and calcined in a reverberatory furnace to drive off H_2O and SO_3. The NiO is mixed with charcoal and smelted in an oil-fired reverberatory furnace at the rate of 1.5 tons in 24 hr. and is either cast into ingots in upright split molds, or shotted after the C it had absorbed has been removed by additions of NiO. The purified $NiSO_4$ solution may also be evaporated to 40° Be. and allowed to crystallize 10 to 12 days at 30° C. The resulting $NiSO_4 . 6H_2O$ is very pure and finds extensive use in the nickel plating industry.

Instead of concentrating the copper-free liquor in a single operation, two steps are taken, steam concentration to 50° Bé., and direct-fire concentration in a V-shaped boiler-iron tank to 72 per cent H_2SO_4. The resulting anhydrous $NiSO_4$ may be freed from part of its H_2SO_4 by placing on a quartz filter, transferring to an inclined lead-covered drainage floor, placing on a perforated lead plate provided with suction, and adding a small amount of wash water. The crystals will contain Ni 31 per cent and free H_2SO_4 8 per cent. The $NiSO_4$ crystals from the solution with 72 per cent H_2SO_4 may be freed from most of

their H_2SO_4 by washing with a little water in a centrifugal machine. Copper- and nickel-free concentrated acid may be freed from As by boiling with charcoal, which reduces As_2O_5 to As_2O_3, and precipitating by diluting to 40° Bé.; the As_2O_3 settles readily and with it the coloring C_xH_y formed in the treatment with charcoal.

One plant takes impure black acid, distils off SO_3, and condenses it to 60° H_2SO_4, leaving As salt cake, which is discarded.

At Great Falls, Mont.,[1] the electrolyte is purified in the following manner: From the 320 tanks (9 ft. 7 in. by 2 ft. 4 in. and 3 ft. 9 in. deep) there are withdrawn daily 25,000 l. electrolyte to be purified. The solution, concentrated to 48° Bé., is drawn into crystallizing tanks, and remains there 4 days, during which 82 per cent of the Cu crystallizes out. The resulting mother liquor, containing H_2SO_4 475, Cu 17.4, As 20.2, Sb 1.1, Fe 15.2 g.p.l., is electrolyzed in four purifying tanks, of the above dimensions, containing lead anodes and copper cathodes. With a circulation of 7 l., or nearly 2 gal. per minute (depositing tanks have one of 6 gal. = 22.5 l.), there are removed 99 per cent of the Cu, 78 of the As, 91.1 of the Sb with an ampere-efficiency of 50 per cent. The more or less slimy cathode deposit contains H_2O 9.66, Cu 46.30, SiO_2 0.38, FeO 1.66, Al_2O_3 0.4, CaO 1.08, S 5.02, As 21.48, Sb 2.28, Ni 0.35, Zn 0.32 per cent, Ag 3.61 and Au 0.03 oz. per ton.

The changes taking place in the electrolyte of the four tanks placed in series, with a circulation of 4 l. per minute, are shown in Table CIV. Correcting

TABLE CIV.—REMOVAL OF CU, AS, AND SB FROM ELECTROLYTE IN INSOLUBLE-ANODE TANKS
Circulation, 4 l. per minute—9,000 amp; 31.8 amp. per square foot

Tank	Grams per liter					Volts per tank	Temperature, degree C.
	H_2SO_4	Cu	Fe	As	Sb		
Inlet tank No. 1.....	144	37.060	6.242	3.200	0.463	.....	17
Outlet tank No. 1.....	184	7.376	6.813	2.240	0.260	2.22	42
Outlet tank No. 2.....	194	0.504	7.364	0.400	0.061	2.25	57
Outlet tank No. 3.....	208	0.088	7.701	0.056	0.038	2.25	64
Outlet tank No. 4.....	216	0.048	7.915	0.028	0.028	2.25	65

TABLE CV.—ANALYSES OF TABLE CIV CORRECTED TO BASIS OF CONSTANT VOLUME OF ELECTROLYTE

Tank	Grams per liter					Percentage elimination of original amounts			Ampere efficiency, per cent
	H_2SO_4	Cu	Fe	As	Sb	Cu	As	Sb	
Inlet tank No. 1.....	144	37.060	6.242	3.200	0.4630				
Outlet tank No. 1.....	169	6.760	6.242	2.050	0.2380	81.8	35.9	48.7	71.70
Outlet tank No. 2.....	165	0.427	6.242	0.339	0.0517	17.1	53.5	40.2	19.50
Outlet tank No. 3.....	169	0.071	6.242	0.045	0.0308	0.9	9.2	4.7	1.68
Outlet tank No. 4.....	170	0.038	6.242	0.022	0.0220	0.1	0.7	1.7	0.15
Totals and averages.	.....	.....	.....	.....	.....	99.9	99.3	95.3	23.26

[1] BURNS, *loc. cit.*

the analyses for a basis of unchanged volume of solution (in which Fe = 6.242 g.p.l.) gives the data in Table CV. This shows that while the percentage deposition of Cu, As, and Sb with a circulation of 4 l. per minute is much higher than with one of 7 l., the ampere efficiency has fallen from 50 to 23.26 per cent.

The electrolyte, freed from most of its Cu, As, and Sb, still retains Fe, Ni, Bi, and Zn. In order to remove these, the liquor is transferred to a lead-lined tank (13 ft. in diameter and 4.5 ft. deep, lined with 12-lb. chemical sheet lead, provided with 600 ft. of 1-in. 8-lb. lead pipe), concentrated to 55° Bé., run into an open tank 10 by 4 ft. and 3 ft. deep, allowed to stand for 4 days; during which Fe, Ni, Bi, and Zn will crystallize as sulphates, leaving behind a mother liquor with H_2SO_4 1,100, As 1, Sb 0.2, Fe 1, Ni 5.3, Zn 1.5 g.p.l.

Originally, the electrolyte cut out from the main stream was run direct into the insoluble-anode tanks. The deposit was in the form of a black slime, which in part adhered to the cathode and in part collected on the bottom of the tank. Its composition was H_2O 10.0 per cent, Cu 55.1, SiO_2 1.1, FeO 0.4, Al_2O_3 0.4, CaO 0.3, S 4.1, As 10.3, Sb 2.5, Ni 0.35, Zn 0.32 per cent, Ag 3.4 and Au 0.02 oz. per ton. The method was abandoned because the ampere efficiency was much lower and the amount of slime produced much higher than when 82 per cent of the Cu had been first removed by crystallization.

3. *Electrodeposition.*—In the liberating tanks as much pure copper as is feasible is deposited, leaving only a small amount of impure copper containing most of the arsenic and antimony. This fractional deposition is accomplished by retarding the flow of solution in the liberating tanks in which the arsenic is to come down. The separated arsenical copper, and the impurities, in part adhere to the cathode, and the remainder falls to the bottom and forms a dark mud. The acid freed from As and Sb goes to the tank house. If it should be too rich in Fe, it is concentrated to about one-third its volume and cooled, whereby most of the Fe will crystallize.

At the plant of the United States Metals Refining Co., Carteret, N. J., Pyne[1] devised a method for lowering the copper content of the electrolyte withdrawn for stripping. Advantage was taken of the tendency for the electrolyte to stratify due to the greater concentration of copper at the anodes. A portion of the electrolyte is passed through stratification tanks, which are the same as ordinary tanks, except in the method of circulation. The tanks are provided with an inlet for electrolyte at one end just above the anode mud line and two outlets at the opposite end, one near the top and one on a level with the inlet. The flow of solution is regulated so a portion low in copper is removed from the top outlet and passed to stripping tanks, while a portion high in copper is removed from the lower outlet and returned to the regular circulation.

256. Costs.—The cost of a multiple electrolytic plant is great on account of the large amount of copper and blue vitriol locked up. Thus at the old plant at Great Falls, Mont.,[2] with 300 tanks, 9 ft. 7 in. by 2 ft. 4 in. and 3 ft. 9 in. deep, each holding an electrolyte with 3.280 per cent Cu, 22 anodes weighing 500 lb.

[1] *Trans. Am. Electrochem. Soc.*, 1915, XXVIII, 111.

[2] BURNS, *loc. cit.*

and 22 cathodes weighing 2.5 lb., and with a daily production of 174,000 lb. copper, employing a current density of 34 amp. per square foot and 2-day cathodes, there are locked up in anodes 2,300,000 lb. Cu, 44,000 oz. Ag, and 316 oz. Au; in slime 22,300 lb. Cu, 140,000 oz. Ag, and 850 oz. Au; in cathodes 180,000 lb. Cu; in solutions 95,000 lb. Cu; or a total of 2,597,300 lb. Cu, 184,000 oz. Ag, and 1,166 oz. Au.

It is generally held (1913) that a plant having a daily capacity of 100 tons of copper, casting anodes as well as cathodes, costs about $450,000, excluding the precious metal that is tied up. The cost of refining by the multiple process at Anaconda in 1897 to 1898 with a yearly output 30,000 tons of copper was 0.75 cts. per pound, or $15 per ton of copper produced.[1] With increase of size of

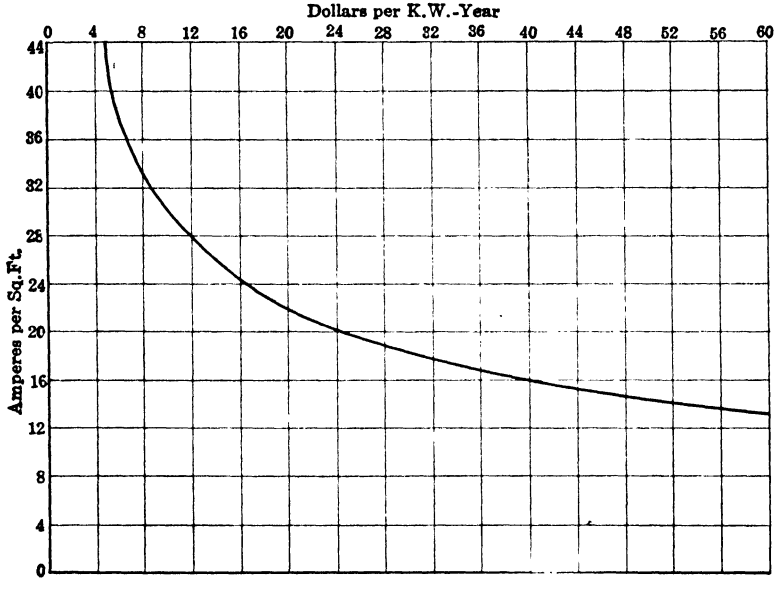

FIG. 283.—Current density *vs.* cost of power (Addicks).

plant and improvement in the methods of handling and of operating, the cost in eastern refineries with a daily capacity of 200 tons and over is (1913) from $4 to $5 per ton of copper, excluding all overhead charges. The old rule that 1 ton of coal is required for 1 ton of cathode copper still holds good today.

The curve given in Fig. 283, drawn by L. Addicks,[2] shows the relation that exists between the current density and the cost of power in the different plants of the United States using the multiple process.

257. Examples of Multiple Process.—Two examples may serve to show the general arrangements of multiple plants: Great Falls, remodelled in 1915; and Raritan No. 2, erected in 1908.

[1] KELLER, *Mineral Ind.*, 1898, VII, 236.
[2] See also *Met. Chem. Eng.*, 1914, XII, 91.

1. *The Great Falls Refinery.*[1]—The present refinery, erected in 1915, has a capacity of 9,000 tons of cathodes per month. The anodes which are cast at the Washoe Smelter in Anaconda are 36 ½ in. long, 28 in. wide, 2 in. thick, and weigh 640 lb. Their analysis is 99.3 Cu, 0.04 As, 0.03 Sb, 80.0 oz. per ton Ag and 0.4 oz. Au.

The cathode starting sheets are deposited in 16 hr. and weigh 7½ lb.

The 1,020 tanks are arranged in two electrical circuits, each of which carries 10,000 amp. at 200 volts. This is equivalent to a current density of 25 amp. per square foot at 0.4 volt per tank. The current efficiency is about 90 per cent.

The refining tanks are arranged in cascades of five tanks. The electrolyte is delivered at the top of a cascade by a Pohle air lift and circulates through the

FIG. 284.—Great Falls refinery.

series at the rate of 6 gal. per minute. The average temperature is 56° C., which is maintained by means of steam coils immersed in the basement storage tanks.

The life of an anode is 24 days, at the end of which time about 11 per cent remains to be returned as scrap to the melting furnaces. Cathodes are drawn every six days, when they have attained a weight of about 142 lb. each. The anode mud is removed at the time the anodes are replaced.

The regular routine calls for drawing of 160 tanks of cathodes and 40 tanks of anodes per day, thus producing 580,000 lb. of cathode copper, which averages 99.97 per cent Cu, 0.0016 As, 0.0015 Sb, and 0.5 oz. per ton Ag.

The average composition of the electrolyte in grams per liter is Cu 40, As 7, Sb 0.5, Fe 6.0, Ni 6.0. The specific gravity is 1.235.

Figure 284 shows a photograph of the interior of the tank house.

[1] BURNS, *The Anode*, 1922, VIII, No. 6.

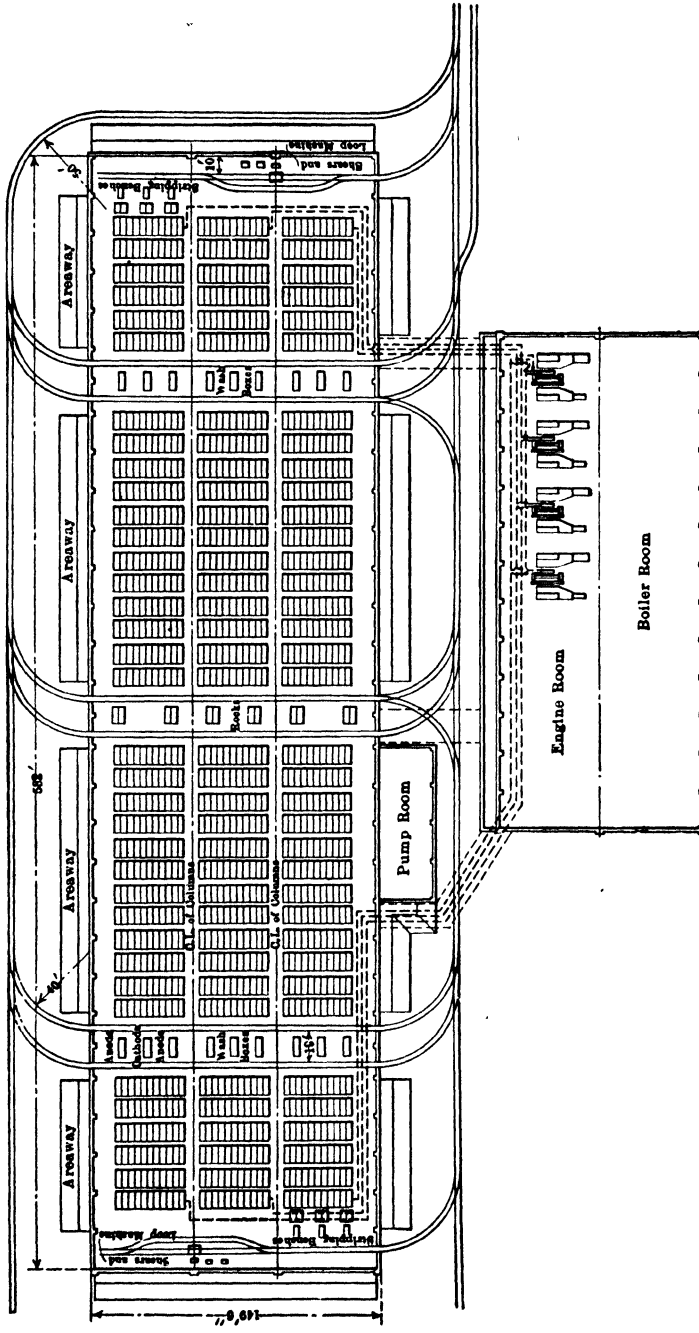

FIG. 285.—Plan of tank house No. 2 Raritan Copper Co.

2. *The Raritan Plant, No. 2 (Walker System).*—The plan of the tank house is given in Fig 285. The building, 610 ft. long by 208 ft. wide, has in the tank room on the main floor four parallel rows of tanks, each of which is served by two 10-ton three-motor overhead cranes, 19 ft. 8 in. above the floor, for handling anodes and cathodes. Beneath the main floor, supported by concrete pillars (Fig. 270), is a light cellar 9 ft. 9 in. high with acidproof floor consisting of 6-in. concrete covered with pitch and overlain by a 2-in. course of chemical brick with pitch joints. The floor drains through gutters to a sump. The building is warmed with exhaust steam and has artificial ventilation to keep everything dry and thus prevent leakage of current. The air is changed by a rotary fan once in 20 min.; 75 per cent of the air goes through the cellar, 25 per cent through the room. There are 1,656 tanks in the room grouped in three rows of 396 tanks and one row of 468; a row has 36 nests, and a nest 11 or 13 tanks, 10 ft. long by 2 ft. 8in. wide by 3 ft. 11 in. deep. There is one liberating tank for every 44 electrolyzing tanks. The engine room has four generators, a generator requiring 1,250 hp. furnishes 396 tanks with a current of 7,200 amp. at 135 volts. The heavily dotted lines show the passage of the current from the generators to each of the three rows of tanks, through which it travels lengthwise. The current density is 15 amp. per square foot cathode area. The main conductors have a cross-sectional area of 12.75 sq. in. and receive a current of 500 amp. per square inch. The fall in potential from anode to cathode is 0.15 volt, and from tank to tank 0.26 volt. At the ends of the building, opposite stripping benches, are the tanks for preparing the starting sheets; nearby are shears and Moore looping machines. In the cross-aisles are washing boxes to clean corroded anodes before they are returned to the anode furnace, and to dip cathodes twice in hot water to wash off adhering electrolyte; in the same aisles are stands or racks for a complement of anodes and cathodes to be taken to or from the tanks. In the pump room are six Antisell centrifugal pumps. The return electrolyte flows into six sheet-iron lead-lined pump boxes of 4 cu. ft. capacity, which overflow either into three emergency tanks, 16 ft. in diameter and 12 ft. deep of sheet iron and lead-lined, or normally into the inlet pipes of the pumps. The electrolyte is raised 27 ft. and delivered to one of the 6 heating tanks, 28 by 4 ft. and 4 ft. deep, provided with 12 lead steam pipes, 1.5 in. diameter, to raise the temperature to about 50° C. For the circulation of the electrolyte, containing 3 per cent Cu and 12 per cent free H_2SO_4, the tank room is divided crosswise into six units, two at the ends, and four in the center, each with 276 tanks. A unit with its six cross-rows of tanks is served from a centrifugal pump: two neighboring cascades are fed from one branch pipe. The rate of circulation is 4 gal. per minute, and the system is shown in Fig. 250. The construction of the tanks has been given in Figs. 269 to 273; a tank contains 28 anodes, 36 by 28 by 2 in., and 29 cathodes, 37 by 30 in., giving it an active cathode surface of 369.5 sq. ft. An anode weighs 490 lb., and has shoulders 1 in. thick narrowed toward the ends, so that the center of gravity lies near them. A starting cathode is ready after 24 hr. deposition. An anode remains in the tank for 30 days and furnishes from 12 to 13 per cent

scrap, of which 5 per cent is in the shoulders; a cathode remains 10 days and weighs 135 lb. A tank is cleaned up, the anodes are exchanged. The working-up of the mud has been discussed in §247.

There are locked up in the plant in rods, plates, busbars, leads, etc., 650,000 lb. Cu, in the electrodes under treatment 18,000,000 lb., and in the electrolyte 300,00 lb. The lead used in construction, pipes, anodes, etc. totals 1,600,000 lb.

3. *Tabulated Data.*—Table CVI contains the leading facts of the principal electrolytic plants of the United States using the multiple process.

B. SERIES SYSTEM

258. Series (Hayden) System in General.—In this process cast or rolled electrodes of high-grade copper are placed vertically in series in an electrolyzing tank charged with acidulated blue vitriol so as to fit closely the sides. Figure 286 gives a diagrammatic sketch. As the current passes through the tank, the electrodes, with the exception of those at the ends, become negatively charged on the sides facing the entrance and positively on the sides facing the exit of the current. The positive current entering through one end electrode, which is solely anode, causes Cu to be dissolved and to be deposited on the negative side of the next following intermediary electrode, while on the positive side of the latter Cu goes into solution, and so on through the tank to the last electrode which, solely cathode, is connected with the exit wire. In this manner the copper is dissolved, and deposited until the original intermediary electrodes, anodes on one side and cathodes on the other, have been changed into electrodeposited copper, and the end electrodes have become lighter or heavier. The insoluble impurities and precious metals collect on the bottom of a tank as anode mud. The pure copper and the anode mud are worked up as in the multiple process.

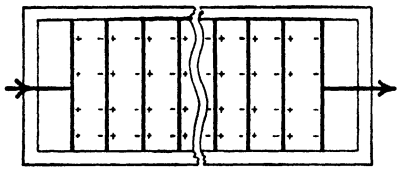

FIG. 286.—The series (Hayden) system.

The Hayden process[1] has outlived the other two series processes of Smith and of Randolph. In the former, the electrodes were placed horizontally and separated by diaphragms, and the current entered at the top; in the latter it entered at the bottom. Stalmann's idea[2] of riveting sheets of copper to the negative sides of the vertical intermediary electrodes of Hayden, and thus facilitating the removal of the last of any undissolved electrode from the newly deposited copper, has been found to be unnecessary. In the Hayden process, then, the vertical electrodes of a tank are connected in series, and the tanks in multiple. Series processes are in operation in the United States at the works of the Nichols Copper Co., Laurel Hill, N. Y., and the Baltimore Copper Smelting & Rolling Co., Baltimore, Md. The former uses cast anodes and the latter uses rolled anodes. The tank details at Baltimore are shown in Figs. 287 to 291.

[1] BADT, *Eng. Mining J.*, 1892, LIV, 126.

[2] U. S. Pat. 467350, 467484, Jan. 18, 1892.

TABLE CVI.—GENERAL DATA ON ELECTROLYTIC REFINING

	American Smelting and Refining Co., Perth Amboy, N. J.	Anaconda Copper Mining Co., Great Falls, Mont.	United States Metals Refining Co., Chrome, N. J.	Raritan Copper Works., Perth Amboy, N. J.	American Smelting and Refining Co., Tacoma, Wash.
Electrolyte:					
Per cent Cu	3.5	4.2	3.0	3.5	3.2
Per cent free H_2SO_4	12.5	21.0	11.5	12.0	12.9
Temperature ° C	57	60° in 55° out	60	55	55
Circulation gallons per minute	5	6	3	4	3½ to 4
Circulation apparatus	Vertical centrifugal pumps	Air lifts[a]	Vertical centrifugal pumps	Antisell pump	Electrically driven centrifugal pumps
Current:					
Amperes per square foot cathode	19	25	18	15	18 to 20
Voltage per tank	0.32	0.4	0.325	0.30	0.3 to 0.35
Current, kilowatts per generator	1,250	1,025 { 205 v. 5,000 amp.	1,330 { 133 v. 10,000 amp.	896 { 128 v. 7,000 amp.	300 { 2,000 750 { 150 v. 5,000 amp. 1,110 { 185 v. 6,000 amp.
Anodes:					
Composition	Cu 99.5, Au 0.7 oz. Ag4082, Pb 0.02, Sb 0.006, As 0.0076, Se 0.009, Ni 0.038	Cu 99.3, Au .04 oz. Ag 85 oz. Sb 0.03, As 0.07, Fe 0.03, Te 0.07, Ni 0.008	Cu 98.61, Au 1.12 oz. Ag 118.25 oz. Pb 0.1911, Sb 0.182, As 0.038, Fe 0.037, Ni 0.153	Cu 99 to 99.5	Cu 99.1, Au 1 to 4 oz. Ag 40 to 160 oz., Pb 0.2, Fe 0.10, Ni 0.07, As 0.085, Sb 0.09
Length, width, thickness	2′ 10¾″ × 2′ 10¾″ × 1¼″	36½″ × 28″ × 2″	36 × 36 × 1¼″	36 × 28 × 1½″	37 × 28 × 1½″
Weight, pounds	440–460	630	525	500	480
Mode of suspension	Copper extension lugs	Copper extension lugs	Cast lugs	Cast lugs	Cast lugs
Life, days	20	24	23	30	26 to 28
Per cent scrap	19	11.3	20	12 to 15	18
Cathode:					
Size starting sheet l.×w.×t.	37½ × 36 × 1/32 to 5/64	38 × 31	38 × 38	37 × 30 × 0.023	38 × 29
Weight, pounds	±13½	8	10.5	8	11
Mode of suspension	Copper loops on rectangular rod	Copper loops on bar	Copper loops	Morrow loop	Loops attached by punch machine
Replaced after ? days	10	6	11.5	10	7 to 12
Weight, pounds	±200	135	212	135	140
Manipulation of electrodes	Overhead electric cranes	Overhead electric cranes	Electric crane	Overhead 10 ton cranes	
Deposition vats:					
Length, width, depth	11′ 6″ × 3′ 5¾″ × 3′ 6½″	10′ 3″ × 2′ 10″ × 3′ 9″	11′ × 3′ 6″ × 3′ 9¼″	10′ × 2′ 10″ × 3′ 8″	8′ 3″, 12′ 4″, 14′ 8″ 2′ 9″, 2′ 9″, 2′ 9″ 3′ 8″, 3′ 10″, 3′ 10″
No. anodes, cathodes	28	25, 26	30, 31	29–30	21 and 22, 32 and 33, 38 and 39
Electric connection	Whitehead single contact 21 sq. in.	.....	Triangular bus bar	Walker	
Busbar, cross-section		10 sq. in.	1¾ × 7″	1¼ × 9″	2½ × 4¾″ 2¾ × 7″ 3 × 8″
Ampere per square inch, cross-section	476	1,000	± 800	620	500
Anode mud:					
Per cent of anode	0.4	0.6	1.75	0.6	0.9
Composition	Au 175 oz. per ton Ag 10,000 per ton Cu 19 per cent Pb 5 per cent	Au 50 oz. per ton Ag 12,000 oz. per ton Cu 17 Pb 1.0	Au 84 oz. per ton Ag 8,143 oz. per ton Cu 9.28 Pb 11.73	Ag 25 per cent Cu 20 per cent	Au. 190 oz. Ag 9,000 oz.
Removed after ? days	20	24	11.5	30	26 to 28

[a] A 6-in. air lift operating at 20-lb. air pressure has a capacity of 400-gal. solution per minute raised 11½ ft. with consumption of 149 cu. ft. free air.

259. Electrolyte.—The composition, temperature, and circulation of the electrolyte are about the same as in the multiple process. It contains about 12 per cent blue vitriol and 9 per cent free H_2SO_4; the circulation is 2.5 gal. per minute; the temperature 40 to 43° C. A low temperature is required because of the mastic linings in the electrolytic tanks which would soften at the temperatures used in the multiple process. The electrolyte at the Baltimore plant is siphoned from the bottom of the tank at the discharge end instead of being made to overflow. The siphon is shown in Fig. 289; it has an orifice at the top which serves as an overflow and starts the siphon, whereupon the regular flow begins near the bottom of the tank. The rate of circulation is usually less than in the

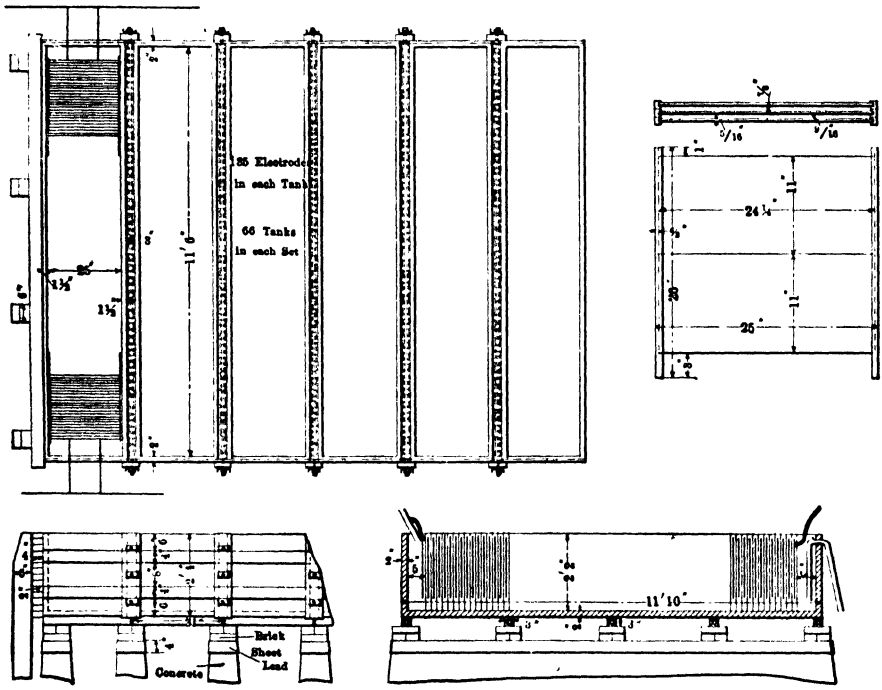

FIGS. 287–291.—Tank-details of the Baltimore electrolytic refinery.

multiple process. The limit of impurities in the electrolyte has never been determined but the following figures have been found safe: Ni, 1.1 per cent; As, 0.8; Sb, 0.08; Fe, 0.25.

260. Current.—The current connection is made through conductor bars at the ends of a tank (Figs. 287 to 289). The current density is 21 amp. per square foot and the e.m.f. 22 volt with a tank holding 135 electrodes; the fall in potential from plate to plate is about ⅙ volt. On account of the high voltage there is a strong leakage of current, which reduces the ampere efficiency to from 65 to 70 per cent. The normal current through a series tank is about 500 amp., while in the multiple process it may reach 10,000 amp.

261. Electrodes. *Baltimore Practice.*—The electrodes are rolled sheet copper. In order to permit rolling, the copper must be of good quality and may not contain too much Cu_2O; hence blister copper from the reverberatory furnace or the converter has to undergo a partial fire refining before it may be cast into suitable cakes. A small addition of Pb, not over 0.1 per cent, to the refining charge improves the rolling quality of the copper.

TABLE CVII.—COPPER SUITED AND UNSUITED FOR ROLLING ELECTRODES[a]

Copper	Pb	Bi	Sb	As	Se and Te	Ag, ounces per ton	Au, ounces per ton
Suited for rolling	0.0082	0.0025	0.0443	0.0068	0.0071		
Suited for rolling	0.0093	0.0320	0.0651	0.0586	0.0098		
Unsuited for rolling	0.0 58	0.0274	0.1245	0.1160	0.0153	100.60	0.45
Unsuited for rolling	0.0073	0.0340	0.1350	0.0582	0.1067	229.40	0.12
Suited for rolling after adding Pb	0.0069	0.0095	0.0602	0.0312	0.0527	156.30	0.48
Suited for rolling after adding Pb	trace	0.0055	0.0370	0.0255	0.0365	172.90	0.60

[a] KELLER, *Mineral Ind.*, 1898, VIII, 233.

Toughened copper from a 250-ton reverberatory furnace is run into ladles, of 6,000 lb. capacity, placed on trucks; they discharge their contents into a retaining tilting ladle of 20,000 lb. capacity, from which billets weighing 490 lb. are cast at the rate of 60 tons per hour by means of a rotating-table casting machine with 40 molds 10½ by 42 by 3½ in. The red-hot billets are dropped onto a conveyor which delivers them to the first of a series of 5 two-high continuous rolls, 21 in. in diameter, which roll the billets into sheets 5/16 in. thick at the rate of 10 tons per hour.[1] From the fifth roll, the sheet is transferred to a sixth roll, in line with the fifth but moving in the opposite direction, which delivers the sheet into a water trough provided with rollers. The cooled sheet goes to crocodile shears, which cut it into electrodes 11 by 24¼ by 5/16 in., forming 6 per cent scrap from the ends. The electrodes are straightened under a drop hammer and go to the frame division (Figs. 290 to 291) where two are placed by hand between a pair of grooved wooden strips; the joints on the positive sides are then painted with tar to facilitate the removal of the deposited copper from any remaining electrode material. The difference between the commercial cathode and the cathode freed from all electrode scrap is shown in Table CVIII.[2] Series copper usually contains 1.5 to 2.0 oz. Ag per ton; multiple copper 0.3 oz.

TABLE CVIII.—CATHODE FROM THE HAYDEN SYSTEM (BALTIMORE)

Cathode	Pb	Bi	Sb	As	Ag, ounces per ton
Commercial	0.00047	0.00018	0.00136	0.00059	1.11
Freed from all scrap	0.00055	.....	0.00094	0.00025	0.36

Nichols Practice.—The anode copper is refined very thoroughly and cast into long narrow slabs about 4½ ft. long, 1 ft. wide, and ½ in. thick. These are

[1] Editor, "Rolling Copper," *Iron Age*, 1907, LXXX, 507.

[2] KELLER, *Mineral Ind.*, 1898, VII, 241.

punched in two corners to form lugs, to which are attached small copper rings suspended from an iron hanger bar. After preparing the anode the side which is to receive the deposited copper is painted with a resinous mixture to facilitate the stripping of the residual anode material. The spacing of the electrodes is accurately regulated by the distance between the hanger bars. Cranes are used for handling the electrodes. The life of an anode is about 18 days.

The copper content of the series anode should not be below 99.10 per cent, and for the best practice the impurities are usually kept below the following percentage figures: Sb, 0.1; Pb, 0.1; As, 0.15; Ni, 0.2; Se, 0.08; Te, 0.05. They could probably be run higher if necessity demanded it.

262. Depositing Tank.—On account of the high voltage in the series process and the consequent danger of short-circuiting, the usual construction of the tanks of wood lined with lead is impracticable. Formerly, the tanks were of slate with joints made tight by a tar cement; the sides were coated with tar, and the tops covered with slats. At present (Figs. 287 to 289) the tanks at Baltimore are 11 ft. 6 in. long by 25 in. wide by 26 in. deep, composed of a mixture of asphalt, asbestos, and sand molded in place; 66 tanks form a block, which rests on square glazed drain-tile pipes each carried by two courses of brick and concrete walls; between brick and wall is placed sheet lead to deflect any leakage of electrolyte. Between the several tanks are spaces 3 in. wide through which pass tie rods, enclosed in lead pipe, connecting wooden buck stays and channel-iron washers, which take up the end thrust of the tanks through plates let into the tanks. The side thrust of a block is taken up by a 4-in. wall built of 2-in. strips, the wall being held in place by posts buried in the ground. The spaces between the single tanks are filled with broken stone, and the interstices closed by pouring in molten sulphur. The 66 tanks of a block are connected in parallel and receive a current of 500 amp. at 220 volt. The tanks at Nichols are about 16 ft. long, 5½ ft. wide, and 5½ ft. deep. Five anodes hung side by side fill up the cross-section of the tank.

263. Corrosion and Deposition.—Both proceed uniformly, and an electrode is corroded in 17 to 18 days. On the edge of the deposited copper there is usually found, in Baltimore practice, a small strip of electrode material, which is pulled off with nippers. At the center there remains sometimes a skeleton-like undecomposed patch of electrode which has to be removed. In Nichols practice there are irregular patches of anode copper.

264. Clean-up.—When the electrodes in a tank have been decomposed they are disconnected; the electrolyte is siphoned off and the cathodes washed with a hose, being turned over like leaves in a book. At Baltimore, after the strips are taken off, the copper is transferred to the reverberatory furnace. The mud is sluiced out and worked up, as well as the fouled electrolyte, as in the multiple process.

At the Nichols plant the adhering anode copper is carefully removed by hand. About 8 per cent of the original anode is removed in this way. Instead of introducing the cathode copper into the refining furnaces by charging machines, as is done with multiple cathodes, they are usually charged through

slots high up on the sides of the furnace. In this procedure the furnace temperature is not greatly lowered, heat is conserved, and the life of the brickwork prolonged.

C. MULTIPLE VERSUS SERIES SYSTEM

265. Multiple and Series Systems Compared.[1]—The advantages claimed for the multiple system are: (1) treatment of anode copper rich in precious metals and high in impurities; (2) handling of material in large units at low cost; (3) permissible variation in composition of electrolyte.

The advantages claimed for the series system are: (1) smallness of power required per unit of deposited copper; this is a direct saving in current expense and a saving in investment, due to smaller generators; (2) small amount of copper tied up in electrodes, electrolyte and busbars, and small amount of precious metals in electrodes; (3) low percentage of scrap produced, (4) little space required per unit of copper deposited, resulting in considerable saving of investment in land, buildings, and equipment.

1. *In the multiple system* anodes with over 1 per cent impurity and 400 to 1,000 oz. AgAu per ton are frequently treated. In the series process the rolling of electrodes requires pure electrode material, but this does not hold where cast anodes are used, as at Nichols; the small electrode distance, favoring the settlement of slime on the deposited copper, and the adhesion of anode material would cause the market copper to be rich in precious metal. In the series system therefore the electrodes should not contain over 0.166 per cent impurity and not over 100 oz. AgAu per ton; 70 oz. is preferred.

2. In the multiple system the electrodes and anode scrap are handled mechanically in large units, but in the series system there is considerable hand labor.

3. In the multiple system there are open spaces between the tank and the electrodes, and the electrode distance is large, both of which permit a rapid circulation without danger of stirring up anode mud. The more rapid the circulation the more impure can be the electrolyte without endangering the cathode copper, and the less frequent has to be its renewal.

1. *In the series system*, as the electrode distance is small, the fall in potential is low; it is about two-thirds or one-half that of the multiple system, or 0.15 *vs.* 0.30 volt. This means that in the series system half or two-thirds the power will be required to deposit a given amount of copper as in the multiple. This advantage is partly offset by the great cost of casting thin electrodes or of rolling cakes into sheets when compared with the casting and handling in the multiple system.

2. In the series system part of the copper in the busbars and all in the crossbars is saved. The amount of copper and precious metal locked up in tanks is equal to the daily product multiplied by the time interval of the clean-up periods; *i.e.*, in the series system the factor is 15, in the multiple it is 26 for copper

[1] PETERS, "Modern Copper Smelting," 1895, p. 577; KELLER, *Mineral Ind.*, 1898, VII, 229; HABER, *Z. Elektrochem.*, 1903, IX, 384; Editor, *Electrochem. Met. Ind.*, 1908, VI, 223; WALKER, *Mineral Ind.*, 1908, XVII, 327.

and 33 for precious metal, allowing for scrap in both cases. With average copper bullion the interest on the metal locked up in the series system is one-half that in the multiple. Another important item is the large stock of starting sheets (usually 2 months' supply) required in a multiple plant as protection against possible labor troubles.

3. The scrap produced in the series system amounts to 3 to 8 per cent of the weight of the electrode; in the multiple the usual figure is 10 and often 13 per cent.

4. The series system formerly required much less floor space than the multiple. This does not hold good any longer, since refiners using the multiple system have increased the depth of the immersed anode; thus the U. S. Metals Refining Co. has anodes 3 by 3 ft., and requires 330 sq. ft. of tank room per ton of copper produced per day, a figure which is lower than in the series system.

Summary.—The cost of operating by the two systems is about the same; the multiple has the advantage of being able to treat almost all classes of copper bullion, and of requiring less care in conducting tank-room operations.

CHAPTER X

COST OF METALLURGICAL OPERATIONS

266. General Discussion.—The subject of costs is of vital interest, but unfortunately the figures which are available are at best very inadequate for giving a complete insight into the operating details. Each company has its own system of cost accounting and there is considerable variation in the methods of distributing overhead charges. Furthermore, costs vary greatly in different localities and even in the same locality a large plant can usually operate at lower cost than a small one, but under very careful management, or due to some particularly favorable factors, the conditions may be reversed. It is not strange, therefore, that most companies are extremely reticent about revealing costs, and published figures are usually of a very general nature.

267. Taxes, Insurance, Amortization, Etc.—These items inevitably have a considerable effect on the cost of production, yet it is doubtful if any two companies agree in apportioning them. The first item will inevitably vary with local conditions and policy, the second with the practice of a given company, and the third with a variety of factors, such as type of construction, available ore supplies, weather conditions, etc.

268. Central Office Expenses.—Large companies maintain a central office and often district offices in addition to the plant offices. The expense of these must be prorated among the plants.

269. General Costs.—Some costs of American copper production have been compiled by H. A. C. Jenison.[1] He divides the producers into three classes: (1) the vein and replacement group, represented by the mines of Butte, the Copper Queen, the United Verde, the Calumet and Arizona, etc.; (2) the low-grade disseminated ore mines, such as Utah, Nevada, Inspiration, Ray, etc.; (3) the Lake mines.

The costs include mining, milling, smelting, refining, transportation, selling costs, general administration charges, depreciation of plant, state and local taxes. Federal income and excess profits taxes and depletion charges were not included. Tables CIX and CX give the tabulated production in pounds and the cost figures. The curves (Figs. 292 to 293) express the results graphically.

[1] *Eng. Mining J.*, 1922, CXIII, 442.

TABLE CIX.—AVERAGE COSTS OF PRODUCING COPPER BY THE PRINCIPAL VEIN, LAKE, AND PORPHYRY MINES IN THE UNITED STATES, FOR THE YEARS 1909 TO 1920, INCLUSIVE

Year	Vein		Lake		Porphyry	
	Production, pounds	Average cost per pound, cents	Production, pounds	Average cost per pound, cents	Production, pounds	Average cost per pound, cents
1909	272,830,408	8.97	226,575,286	9.9	154,089,208	9.2
1910	487,289,463	8.2	218,272,734	9.9	205,593,242	8.4
1911	463,322,929	8.8	213,093,306	9.6	263,284,521	8.1
1912	510,801,542	9.0	215,859,751	10.7	314,037,391	8.7
1913	492,092,409	10.1	130,487,378	13.8	389,239,696	9.3
1914	428,435,453	9.8	159,278,415	11.5	365,445,511	8.3
1915	557,696,842	9.5	243,802,361	9.6	442,126,316	7.9
1916	787,443,989	10.7	259,511,319	12.4	665,469,103	9.3
1917	712,239,051	12.2	253,769,681	15.6	680,700,041	12.7
1918	723,478,901	13.6	226,901,556	18.9	724,069,192	13.98
1919	408,348,013	14.6	177,463,610	18.4	467,695,747	14.6
1920	450,760,285	14.2	153,021,787	18.2	470,250,341	14.6

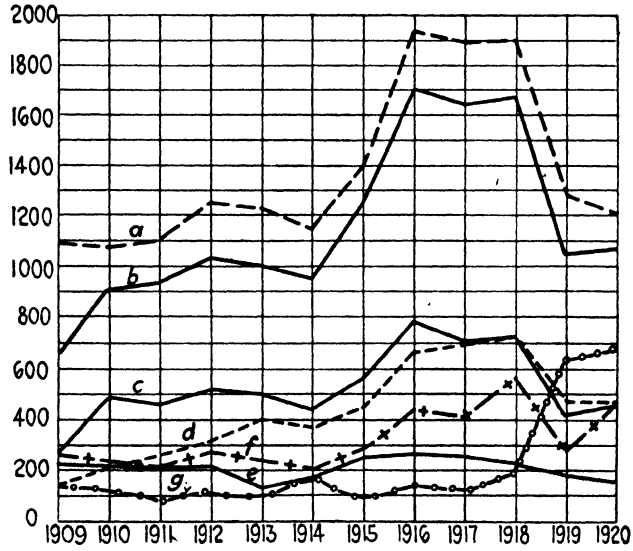

FIG. 292.—Production and stocks of copper.

a—Total smelter production of the United States from domestic ore.
b—Total production of principal mines (all groups).
c—Production of principal mines (vein and replacement group).
d—Production of principal mines (porphyry group).
e—Production of principal mines (Lake group).
f—Stocks of blister and materials in process of refining at end of each year.
g—Stocks of new refined copper in hands of refiners at end of each year.
Note—Vertical scale is in millions of pounds.

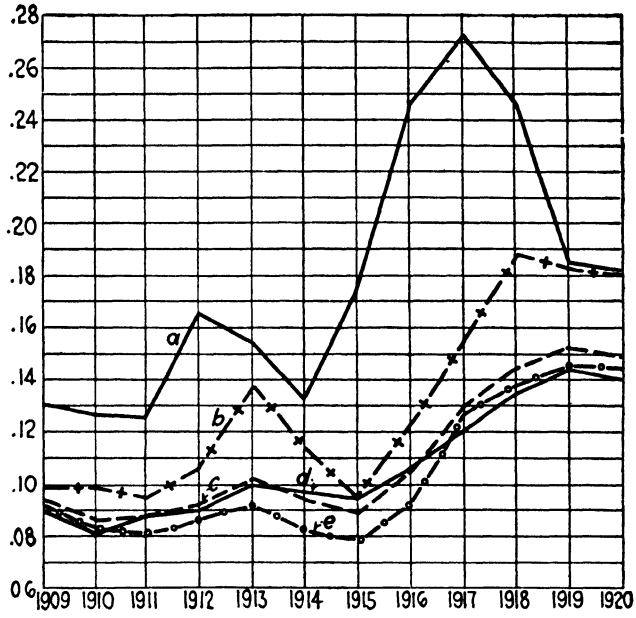

FIG. 293.—Average selling price and costs of copper production.

a—Average selling price per pound.
b—Average cost per pound (Lake group).
c—Average cost (all groups).
d—Average cost per pound (vein and replacement mine group).
e—Average cost per pound (porphyry group).

Note—Costs include mining, milling, smelting, refining, transportation, selling costs, general administration costs, depreciation of plant and equipment charges and all taxes except Federal income and excess profits taxes. Depletion charges not included. Values of the precious metals recovered and miscellaneous income incident to actual mining operations are credited to costs of production. Vertical scale is cents per pound.

The weighted average cost of all American copper in 1918[1] exclusive of federal excess profits tax, was as follows:

Labor	$0.0531
Material and supplies	0.0376
Overhead	0.0214
Depreciation	0.0094
Depletion	0.0072
Tolls	0.0500
	$0.1787
Less credits	0.0171
	$0.1616

In 1921 the figures were estimated as follows:

Labor	$0.0410
Material and supplies	0.0322
Overhead	0.0214
Depreciation	0.0100
Depletion	0.0072
Tolls	0.0500
	$0.1618
Less credits	0.0123
	$0.1495

[1] *Eng. Mining J.*, 1921, CXI, 91.

TABLE CX.—AVERAGE COST OF PRODUCING COPPER BY PRINCIPAL MINES DURING THE PERIODS 1909 TO 1914, INCLUSIVE, PRE-WAR YEARS; 1915 TO 1918, INCLUSIVE, WAR YEARS; AND 1919 AND 1920, POST-WAR YEARS

Year	Total smelter production in the U. S. pounds	Production by principal mines, pounds	Average price received per pound, cents	Average cost per pound, cents
Pre-war period				
1909	1,092,951,624	653,494,902	13.0	9.3
1910	1,080,159,509	911,155,439	12.7	8.6
1911	1,097,232,749	939,700,756	12.5	8.8
1912	1,243,268,720	1,040,698,684	16.5	9.3
1913	1,224,484,098	1,011,819,483	15.5	10.2
1914	1,150,137,192	953,159,379	13.3	9.5
	6,888,233,892	5,510,028,643	14.0	9.3
Average cost			9.3	
Difference between average price received and average cost			4.7	
War period				
1915	1,388,009,527	1,243,625,519	17.5	8.9
1916	1,927,850,548	1,712,424,411	24.6	10.4
1917	1,886,120,721	1,646,708,773	27.3	12.9
1918	1,908,533,595	1,674,449,649	24.7	14.5
	7,110,514,391	6,277,208,352	23.2	11.9
Average cost			11.9	
Difference between average price received and average cost			11.3	
Post-war years				
1919	1,286,419,329	1,053,507,370	18.6	15.2
1920	1,209,061,040	1,074,032,413	18.4	14.9
	2,495,480,369	2,127,539,783	18.5	15.1
Average cost			15.1	
Difference between average price received and average cost			3.4	
Grand total, 1909–1920	16,494,228,652	13,914,776,778	18.65	11.35
Average cost			11.35	
Difference between average price received and average cost			7.30	

The published costs at the Tennessee Copper Co.[1] are as follows:

Mining expense	$0.05440
Railway expense	0.00208
Treatment (smelting and milling)	0.04217
Converter expense	0.01283
General expense	0.02189
Total, exclusive of New York office	$0.13337

Published figures at the United Verde Co.[1] are as follows:

Labor	$0.0367
Fuel	0.0203
Other supplies	0.0264
Freight on bullion	0.0070
Refining	0.0115
Taxes	0.0198
Depreciation	0.0050
	$0.1267

270. Roasting Costs.—In 1913 the cost of roasting in an Eastern acid plant with four furnaces treating 60 tons pyrite in 24 hr. was 18 cts. per ton, divided as follows: labor 12, repairs 3, sundries 3.

At Anaconda before 1914 the cost of roasting was 30 cts. per ton, which is probably the cost in most smelting plants at that time with most of the overhead expenses included.

At present the costs vary from 30 to 60 cts. per ton. The figures do not include overhead and apply only to cases where no fuel is required. The figure will vary if fuel is used. About 50 cts. may be taken as a fair average with the division about as follows: labor about 15 cts., repairs about 10 cts., power about 5 cts., and general handling of ore about 20 cts.

271. Roasting Plant Costs.—In 1916 the cost of a Wedge furnace erected was about $25,000. At that time a complete installation of 24 roasters with tracks, conveyors, flues, etc. was made at a cost of about $1,500,000.

In 1918 a roasting plant with four McDougall-type furnaces was constructed for about $250,000. Of this about $90,000 was for furnaces, $110,000 for building d conveying equipment, and $5,000 for a waste-gas flue about 300 ft. long connecting with the main flue. It is probable that, with all items of expense included, a single furnace erected would cost today over $30,000 and a complete plant with 30 furnaces about $2,000,000.

272. Smelting Costs in the Blast Furnace.—The first edition of this book (1914) contained the following statement regarding the cost of blast furnace smelting:

The cost of blast furnace smelting in the U. S. varies within wide ranges, the lowest is probably 50 cts., the highest $3. Beardsley estimates the cost at Mount Lyell to be $2.36; at Copper Hill, $1.24; in Mexico, $2.03; at Granby, B. C., same as Copper Hill.

[1] *Eng. Mining J.-Press.*, 1923, cxv, 888.

Austin gives for Tennessee Copper Co. $0.96, for Granby $1.20. The report of Tennessee Copper Co. for 1911 gives the cost as $0.89 per ton of charge; that of Balaklala $3 per ton; that of Cananea $2.57 per ton of copper-bearing material. Sworn data for Butte in 1901 to 1902 were Ore Purchasing Co., $5.96; Butte & Boston, $4.84. The cost in Montana today is about $1.

The present (1924) costs are probably 1½ to 1⅔ times the 1911 figures, but the increase has not been the same in all places and modifications in smelting methods have greatly changed conditions at some plants, *e.g.*, Mount Lyell. A fair figure for operations in the southwestern part of the United States is $2.15 per ton of dry charge exclusive of taxes and depreciation.

273. Cost of Blast Furnace.—A complete blast furnace equipped to handle 1,000 tons of ore per day, including ore-bedding facilities, blowing equipment, etc. will cost at present (1924) about $2,000,000, while in 1913 it would have cost about $1,250,000.

274. Cost of Reverberatory Smelting.—In 1913 the reverberatory smelting cost at Anaconda was about $1.50 per ton and at Garfield about $1.40. At present the usual cost is $2 to $2.50 per ton of charge, which may be divided approximately into the following items: fuel 50 per cent, labor 10, repairs 12½, slag and matte handling 7½, ore handling 20. It is obvious that these percentages will vary in different localities. In the item of fuel a ratio of 1:6 or 1:7 is a fair average when using hot calcine. If cold material is used, the fuel may be as high as 25 per cent of the charge. During 1918 and 1919 smelting costs in several large plants reached $3 to $3.50, principally due to high labor and fuel costs. The figures do not include interest and depreciation.

275. Cost of Reverberatory Plant.—In 1919 one reverberatory furnace in the Southwest 27 ft. wide and 130 ft. long cost $110,000. This cost included overhead tracks and the proportional cost of the reverberatory building. In addition to this was a cost of $48,000 for a waste-heat boiler. At present (1924) a fair estimate is $60,000 for a furnace, $40,000 for calcine tracks, slag tracks, and proportional building cost, and $35,000 for a waste-heat boiler.

A roasting and reverberatory smelting plant to handle 1,000 tons of ore per day, complete with all necessary auxiliary equipment, including waste-heat boilers, will cost about $2,400,000.

276. Cost of Converting.—The cost of converting depends greatly on the grade of matte used. At one plant where a 13 per cent matte is used the cost is $20 per ton of matte, while with a high-grade matte and exceptionally satisfactory operating conditions the cost may be as low as $2.50 per ton. Probably at most plants the cost falls between $5 and $7. This may be distributed under the heads: labor 15 to 30 per cent, power (including compressor) 25 to 40 per cent, repairs 12 to 15 per cent, casting and sampling 15 to 20 per cent, slag handling 15 to 20 per cent, miscellaneous 10 to 15 per cent.

277. Cost of Converter Plant.—In 1917 a Peirce-Smith 13-ft. diameter converter was installed in Utah for $78,000 and a similar one in Arizona for $86,000. Two installed in one plant in the Southwest in 1918 cost $60,000 each. These costs did not include blowing equipment or flues but did include hood.

Blowing equipment for the two 1918 converters referred to above cost $80,000 exclusive of boilers.

A converting plant for producing 90 tons of blister copper per day from 45 per cent matte complete with all necessary equipment (exclusive of boilers) would cost about $650,000.

278. Cost of Refining.—The cost of electrolytic refining, including the casting of the anodes, preparation of the cathodes, and casting of the fine copper, is about $15 to $20 per ton of copper. This is nearly equally divided between casting expense and tank-room expense. Of the casting expense, about two-thirds is equally divided between labor and fuel, and power represents about half of the tank-room expense. An important item of refining expense is interest on the copper and precious metals in process. This is a variable, depending on the amount of precious metals in the copper. In general, it is fair to figure four to six months' interest on the plant capacity.

279. Cost of Refining Plant.—The approximate cost of an electrolytic refinery is $25 per ton of annual capacity plus $5 per ton for the power plant.

280. Cost of Leaching.—Leaching costs vary so widely that no generalization can be safely made and, since detailed costs at individual plants are not available, no figures will be given here.

INDEX

A

B

C

D

E

F

G

M

N

O

P

T