LUBRICATION AND LUBRICANTS.

CHARLES GRIFFIN & CO., LTD., PUBLISHERS.

⁂ *Note:—All prices are net, postage extra.*

INDUSTRIAL OIL ENGINEERING. A Reference Book of Data relating to Lubrication and Industrial Oils, including Tables, General Oil Information, and Engineering and Industrial Requirements. In Two Volumes.

By JOHN ROME BATTLE, B.Sc. in M.E., M.E.

Vol. I.—**LUBRICATION AND INDUSTRIAL OIL SECTION (Complete).**

SECOND EDITION, Revised. In Large Crown 8vo. Cloth. Pp. i-x+1141. Profusely Illustrated. **45s.**

Vol. II., dealing with "**Liquid Fuel**" is in preparation.

A MANUAL OF LOCOMOTIVE RUNNING SHED MANAGEMENT.

By WALTER PATERSON, M.I.Loco.E., and HARRY WEBSTER, M.I.Loco.E.

In Large 8vo. Cloth. Pp. i-xii+200. With 44 Illustrations and 2 Folding Tables. **15s.**

THE RUNNING AND MAINTENANCE OF THE MARINE DIESEL ENGINE. A Reference Book for Marine Motor Engineers. Practical suggestions from Sea Experience.

By JOHN LAMB, M.Inst.Mar.Eng., Chief Eng., British Mer. Marine.

THIRD EDITION. Large Crown 8vo. Thoroughly Revised and Enlarged. Re-set on Larger Page. **18s.**

A MANUAL OF MARINE ENGINEERING: comprising the Design, Construction, and Working of Marine Machinery (including the Diesel Engine).

By A. E. SEATON, M.Inst.C.E., Vice-President Inst. N.A., M.Inst. Mech E, etc

NINETEENTH EDITION, Revised In Large 8vo. Cloth. Pp. i-xxviii+974. With Frontispiece, 375 other Illustrations, and 116 Tables. **36s.**

MATERIALS AND THEIR APPLICATION TO ENGINEERING DESIGN. Being a Practical Treatise for Engineers, Designers, and others, prepared from the standpoint of Works Practice.

By Prof. E. A. ALLCUT, M.Sc., etc., and **E. MILLER,** Hons Medallist Electro-Met., City and Guilds London Inst., etc.

In Medium 8vo Cloth. Pp i-xiii+519, with Frontispiece and 221 Illustrations. **32s.**

THE DESIGN OF TOOTHED GEAR.

By CLAUDE W. HILL, A.M.Inst.C.E., M.Inst.Elect.E., etc.

In Large 8vo. Stiff Boards. Pp. i-vii+60. With 17 Illustrations in the Text. **3s. 6d.**

AIDS IN THE COMMERCIAL ANALYSIS OF OILS, FATS, AND THEIR MANUFACTURED PRODUCTS.

By GEORGE FENWICK PICKERING.

In Medium 8vo. Cloth. Pp. i-viii+133. With Tables. **7s. 6d.**

CHARLES GRIFFIN & CO., LTD., 42 DRURY LANE, LONDON, W.C. 2.

LUBRICATION AND LUBRICANTS.

A TREATISE ON THE

THEORY AND PRACTICE OF LUBRICATION,

AND ON THE

NATURE, PROPERTIES, AND TESTING OF LUBRICANTS.

BY

LEONARD ARCHBUTT, F.I.C., F.C.S.,
PAST PRESIDENT OF THE SOCIETY OF PUBLIC ANALYSTS AND OTHER ANALYTICAL CHEMISTS,
FORMERLY CHEMIST TO THE MIDLAND RAILWAY COMPANY,

AND

R. MOUNTFORD DEELEY, M.Inst.C.E., M.I.Mech.E., F.G.S.,
FORMERLY LOCOMOTIVE SUPERINTENDENT, MIDLAND RAILWAY

FIFTH EDITION.

Revised throughout, greatly enlarged, reset.

LONDON:
CHARLES GRIFFIN & COMPANY, LIMITED,
42 DRURY LANE, W.C.2.
1927.

Printed in Great Britain by
Neill & Co., Ltd., Edinburgh.

PREFACE TO THE FIFTH EDITION.

So much new work has been done since the last revised (third) edition of this book was published in 1912, that it has been necessary to rewrite several chapters and to rearrange much of the subject-matter. The present edition is therefore, in some respects, a new treatise.

The nature of "oiliness" and the condition of a lubricated surface are now so much more clearly understood, that it is possible to formulate a general theory of solid friction. The second and third chapters of the present volume are devoted to a discussion of the latest researches on this subject; the general aspects of the problem of lubrication being briefly set out in Chapter I., mainly to help the reader to understand the plan which has been followed in dealing with it.

It may be remarked that the results of recent experimental work show that the views outlined in earlier editions were sound; but it is now possible to deal with the theory of static friction in a much more satisfactory manner.

We are indebted to Mr. F. M. Lidstone for having kindly revised and amplified the mathematical portion of Chapter IV. on the Viscosity of Liquids.

Chapter V., on the Theory of Viscous Lubrication, has been revised and new matter added, relating principally to the important work of Michell on the lubrication of inclined plane surfaces, and the interesting researches of Stanton on journal friction.

Dr. J. S. S. Brame has very kindly revised for us, and practically rewritten, the first two sections of Chapter VI. on the Sources, Composition, and Manufacture of Mineral Lubricating Oils, and we are indebted to him for the section on Lubricating Oils from Low Temperature Tar, and for many helpful suggestions in our revision of the divisions A. and B. of this chapter. Dr. F. B. Thole has kindly helped us by reading through Section A. IV. on the Properties and Composition of Mineral Lubricating Oils. For the information contained in Section G., on Lubricating Greases, and for many suggestions kindly offered, we are mainly indebted to Mr. V. F. Eberle.

Chapters VII. and VIII. have been extensively revised and much new matter added. The standard methods for the testing of lubricants published by the Institution of Petroleum Technologists and the British Engineering Standards Association have been included, and the British Standard Method for the Determination of Viscosity in Absolute C.G.S. Units by means of tube viscometers is set out in the Appendix. New sections have been added on the Specific Heats of Lubricating Oils, on the Heats of Adsorption of Oils by Metal, and on Demulsification Tests. In Chapter VIII. a full account is given of Wells' and Southcombe's "Germ Process" for improving mineral lubricating oils by dissolving in them small quantities of free fatty acids. The section of this chapter on the Resinous and Asphaltic Impurities of Mineral Oils has been rewritten, and the principal Oxidation, Coking, and Sludging Tests are given in detail.

Chapter X., on the Frictional Testing of Lubricants and Bearing Metals, has been largely rewritten and rearranged, and full particulars are given of the latest machines and methods devised by Deeley, Hardy, Stanton, and Lanchester for measuring the oiliness of lubricants and surfaces.

In earlier editions of this work the remaining part of the subject has been dealt with in two rather long final chapters. The amplification necessitated by the revision of these has made it desirable to split them up into six shorter chapters, each dealing with a separate subject. In this edition, therefore, various types of Lubricators are described in Chapter XI., Bearing Metals and types of Bearing Design are treated in Chapter XII., and a separate chapter, XIII., is devoted to Ball and Roller Bearings. Chapter XIV. contains some notes on the Lubrication of Engines and Machines. Lubricating Oil Recovery, in which great advances have been made by the invention of centrifugal filters and the Hele-Shaw stream-line filter, forms the subject of Chapter XV., and a final chapter on the Management of Machinery concludes the volume. Our thanks are due to Sir Henry Fowler, K.B.E., for information relating to the composition of bearing metals and antifriction alloys used on British and other railways.

We trust that the present volume will be found helpful by those desirous of obtaining reliable information on this important subject, and we again express our thanks to many correspondents and friends who have kindly assisted us in many ways.

L. ARCHBUTT.
R. M. DEELEY.

January 1927.

PREFACE TO THE FIRST EDITION.

ALTHOUGH the subject of lubrication and lubricants is by no means unrepresented in our technical literature, we are not acquainted with any one work in which it is adequately treated in the light of our present knowledge, from the point of view of the engineer and also of the chemist. Nevertheless, it was not without considerable hesitation that we accepted the invitation of the publishers to write a treatise on the subject.

So much still remains to be learned, relating to the chemical constitution and physical properties of lubricants, and also regarding the manner in which they act, under certain circumstances, in reducing friction, that we cannot claim to have produced a complete treatise. We trust, however, that our work, though necessarily incomplete in many respects, will prove of value to the engineer, the chemist, and the manufacturer.

Being the joint production of a chemist and an engineer, the responsibility for the chemical and mechanical sections of the work must necessarily rest mainly upon one or other of the authors; the purely physical sections are, however, to a large extent of joint authorship. Our object has been to, as far as possible, make each section complete in itself. In the first four chapters, friction, the viscosity of liquids, and lubrication are treated mainly from a theoretical point of view; in the five succeeding chapters, the nature, properties, and testing of lubricants are dealt with; and the two final chapters are devoted to a description and discussion of the practical application of lubricants to machinery for the purpose of reducing friction and wear. In the last chapter, which has been written chiefly for engineers in charge of machinery, many points are again briefly discussed which have already been more fully treated in earlier portions of the work.

The descriptions of oil-testing machines in the chapter on the mechanical testing of lubricants are based almost entirely on published information; but, in the instructions for their manipulation, an endeavour has been made to state the conditions under which tests may be made for "oiliness" or for viscosity, much that has been written on the subject being unsound, owing to a want of knowledge concerning the conditions under which these two properties of lubricants are of active value.

For the theory of viscous lubrication we are indebted, firstly, to the experimental work carried out for the Institution of Mechanical Engineers by Mr. Beauchamp Tower, and secondly, to the theoretical explanation of Mr. Tower's results communicated to the Royal Society by Professor Osborne Reynolds, F.R.S. Without losing sight of the valuable work done by other investigators, amongst whom should be mentioned Professors Thurston and Goodman, also Mr. Veitch Wilson, who, as a manufacturer, has laboured for so many years to spread a correct knowledge of the nature and properties of lubricants among users, it is not too much to say that the work done by Mr. Beauchamp Tower and Professor Osborne Reynolds has been mainly instrumental in leading to the adoption of scientific methods of lubrication, and has enabled the part played by the viscosity of the lubricant to be clearly stated. An equally complete treatment of the theory of oiliness or greasiness is at present impossible; but the bearing upon this important branch of the subject of the investigations on the stability and thickness of liquid films carried out by Professors Reinold and Rücker has been called attention to. Lord Rayleigh's contributions to the theory of superficial forces have also enabled us to show the important part played by superficial tension.

The adoption of more correct ideas concerning the theory of lubrication, and the demand for machines of greater efficiency and power, have led to very rapid improvements in the designs of bearings and in the methods of applying lubricants. Since we undertook to write this work, great progress has been made in this direction. Every endeavour has been made to give the latest practical information, and we trust that, in giving prominence to new designs, we shall not be regarded as having passed over with undue haste older methods and principles which still commend themselves to many practical engineers.

Owing to the advances made during recent years in the manufacture and refining, as well as in the methods of application and testing of lubricants, it is too much to expect that the information which we have sought to convey is, in all respects, up to date. We shall, therefore, gratefully welcome any suggestions on the part of our readers which may enable us in a future edition to remedy defects and supply omissions.

References are given throughout the text to the chief literary sources whence we have derived information. In the case of chemical and physical papers appearing in foreign periodicals, we have referred chiefly to the valuable abstracts published by the Society of Chemical Industry and the Society of Public Analysts. The tables of chemical and physical constants of oils, etc., have been compiled mainly from the data collected by Dr. Lewkowitsch for his standard treatise on the analysis of oils, partly from results accumulated in our own experience. *The Engineer* has also been freely quoted.

Our best thanks are due to Mr. C. E. Wolff, B.Sc., for assistance in some of the mathematical portions of the work; to Mr. T. H. Adams for assisting in the experimental work; and to Messrs. H. R. Haigh, J. F. Ingleby, H. Jessop, Colin R. Strong, R. Weatherburn, and others, to whom we are indebted for information, suggestions, or assistance in other ways.

L. ARCHBUTT.
R. M DEELEY.

DERBY, *September* 1899

CONTENTS.

CHAPTER I.

CHAPTER II.

THIN FILMS AND SURFACE FORCES.

CHAPTER III.

FRICTION OF CLEAN, SOLID SURFACES, AND SURFACES COVERED BY ADSORBED FILMS.

CHAPTER IV.

INTERNAL FRICTION OR VISCOSITY OF LIQUIDS. PLASTIC FRICTION.

CHAPTER V.

THE THEORY OF VISCOUS LUBRICATION.

CHAPTER VI.

LUBRICANTS: THEIR SOURCES, PREPARATION, AND CHIEF PROPERTIES.

CHAPTER VII.

PHYSICAL PROPERTIES AND METHODS OF EXAMINATION OF LUBRICANTS.

CHAPTER VIII.

CHEMICAL PROPERTIES AND METHODS OF EXAMINATION OF LUBRICANTS.

CHAPTER IX.

THE SYSTEMATIC TESTING OF LUBRICANTS BY PHYSICAL AND CHEMICAL METHODS.

CHAPTER X.

THE FRICTIONAL TESTING OF LUBRICANTS, BEARING METALS, AND OTHER SURFACES.

CHAPTER XI.

APPLIANCES FOR LUBRICATION (LUBRICATORS, ETC.).

CHAPTER XII.

THE COMPOSITION, DESIGN, AND LUBRICATION OF BEARINGS AND OTHER FRICTION SURFACES.

CHAPTER XIII.

THE DESIGN AND LUBRICATION OF BALL AND ROLLER BEARINGS.

CHAPTER XIV.

THE LUBRICATION OF ENGINES AND MACHINES.

CHAPTER XV.

THE CLARIFICATION AND RECOVERY OF USED LUBRICATING OIL.

CHAPTER XVI.

THE MANAGEMENT OF MACHINERY.

APPENDIX.

LIST OF TABLES.

MEANING OF THE SYMBOLS EMPLOYED IN THIS WORK.

A.—*Area.*
a *and* l.—*Dimension in the direction of motion.*
b.—*Dimension at right angles to direction of motion.*
c.—*A constant.*
F.—*Total resistance.*
f.—*Resistance per unit of area.*
g.—*Acceleration due to gravity.*
H.—*Unit of heat.*
h.—*Head of liquid.*
k.—*A constant.*
N.—*Revolutions per minute.*
P.—*Total pressure.*
p.—*Pressure on unit area.*
T.—*Force of tension or compression.*
r.—*Radius or distance from a centre line.*
r_0.—*Radius of a tube or cylinder, or half the distance separating two planes.*
t.—*Time.*
V.—*Volume.*
v.—*Velocity.*
v_1.—*Maximum velocity.*
$\bar{v}$.—*Mean velocity.*
W. *and* w.—*Weight or load.*
η.—*Viscosity.*
μ.—*Static coefficient of friction.*
μ_1.—*Kinetic coefficient of friction.*
π.—*Ratio of circumference to radius.*
τ.—*Thickness.*
d *and* ϱ.—*Relative density.*
σ.—*Value analogous to density.*

LUBRICATION AND LUBRICANTS.

CHAPTER I.

THE PROBLEM OF LUBRICATION.

THE object of lubrication is the reduction of friction, and in order that the problem of lubrication may be understood, it is necessary clearly to distinguish between the friction that occurs when two solid surfaces are in actual contact (solid friction), and when they are entirely separated by a viscous liquid film (fluid friction). Lubrication, both in theory and practice, has, in fact, to be considered from two entirely different standpoints, according to whether solid friction or fluid friction is being dealt with.

The word "lubrication" is derived from the Latin *lubricus*, slippery, a liquid or soft solid being regarded as a lubricant, when its presence on a surface renders the latter more slippery than when the surface is quite clean. Even in very early times (before the invention of complex, high-speed, modern machines), devices such as wheel axles, mill gearing, etc., were lubricated with substances which were found to make the surfaces more slippery, and which prevented the bearings from suffering undue heating and wear. Indeed, lubrication under the conditions of solid friction has been practised from time immemorial, but has been less carefully studied (until quite recently) than have the more modern methods of viscous film lubrication. In fact, it is only within the last few years that our knowledge of the structure and properties of matter has become sufficiently detailed for even tentative theories of solid friction to be propounded, and much of the experimental work bearing upon the subject has been carried out since the third edition of this work was published in 1912.

By means of electro-magnetic waves of very short length, known as X-rays, Sir William Bragg and his son have determined the arrangement of the atoms in the molecule and the orientation of the molecules in the solid of a large number of substances. Based partly upon such researches, much work has been done to elucidate the structure and properties of thin (adsorbed) films of matter, which adhere to solid surfaces and often increase the slipperiness of their surfaces. Among those who have worked at this subject may be mentioned the American chemists, G. N. Lewis, Irving Langmuir, and W. D. Harkins, the results of their work being recorded in papers on surface tension, cohesion, capillarity, adsorption, etc., Langmuir especially, in a series of papers, having developed a chemical theory of surface phenomena which has thrown much light on lubrication problems.

R. M. Deeley [1] has advanced the theory that "oiliness," the property which makes a liquid a lubricant, is due to the chemical union of the molecules of the lubricating liquid with the atoms or molecules of the solid surface, and has invented the machine described in Chapter X., by which the oiliness of a liquid or soft solid may be measured.

During the last seven years the friction between lubricated surfaces has been studied by Sir William B. Hardy and Miss Ida Doubleday, who have measured the relative lubricating values of a number of pure chemical substances under controlled conditions. The experiments carried out by these investigators are of extreme interest and value, and an account of them will be found in Chapter III. In Chapter II. the nature of adsorbed films on solids and liquids is considered, and in Chapter III. the friction phenomena between such surfaces are discussed.

Experiments by Hardy and Doubleday have shown that when a clean surface of bismuth slides against another clean surface of bismuth the friction F is proportional to the load W, the value F/W being always the same for the same substance at the moment sliding commences, except with very small loads. This is called the *static coefficient of friction*, or the *threshold friction*. The magnitude of this coefficient is different for each element, the change being probably a periodic one with increasing atomic weight.

The film formed by a lubricant on a solid surface has a frictional value which depends partly upon the chemical nature of the solid and partly upon the chemical nature of the lubricant, the frictional results of the solid and the adsorbed film upon it being cumulative. Calling the slipperiness of solids "unctuousness" and the lubricating value of adsorbed films "oiliness," the actual efficiency of a bearing can be said to be partly due to unctuousness and partly to oiliness.

The lubrication of modern machinery, the bearings of which have to carry heavy loads and the contact surfaces of which have high relative velocities, could not be adequately accomplished by the older methods. It was soon found that when the lubricant was supplied abundantly and continuously, much smaller frictional losses resulted than had hitherto been obtained with less generous supplies of oil.

The classical "friction experiments" made by Beauchamp Tower for the Institution of Mechanical Engineers in 1883 and 1884,[2] and the mathematical investigation of his results by Osborne Reynolds,[3] established the fact that a well-lubricated journal or shaft, rotating at a fair speed, becomes automatically separated from its bearing by a film of liquid oil, which is under pressure, and that the frictional resistance is then entirely due to the viscosity of the oil. The mathematical theory has been further developed by Sommerfeld, A. G. M. Michell, Harrison, and Stanton; Michell's work having special reference to flat surfaces, such as thrust bearings. All bearings are now designed in accordance with Reynolds' theory, so as to ensure, as far as possible, that the surfaces do not touch when running, and that a film of liquid oil is maintained between them. In Chapter IV. of this book the theory of fluid friction is discussed, the theory of lubrication under conditions of fluid friction being dealt with in Chapter V. Liquid film or viscous lubrication, as this type may be termed, depends entirely upon the viscosity of the oil, and as mineral oils of suitable viscosity are as efficient lubricants under these conditions as animal

[1] Memorandum to the Lubricants and Lubrication Inquiry Committee, 5th December 1918, and "Oiliness and Lubrication," a paper read before the Physical Society, 28th November 1919.

[2] *Proc. Inst. Mech. Eng.*, 1883, p. 632; 1884, p. 29; 1885, p. 58; 1888, p. 173; 1891, p. 111.

[3] *Phil. Trans.*, 1886, p. 157.

or vegetable oils, are sufficiently abundant to supply modern requirements, and are the more inert chemically as well as being cheaper, they are very widely used.

In the first edition of this book, issued in 1899, it was pointed out that although the results obtained by Tower in his experiments with perfectly lubricated journals were proved by Osborne Reynolds to be entirely due to the viscosity of the oil, it was well-known to engineers that when the supply of oil was insufficient, or the conditions of load, speed, etc., were unfavourable to the formation of the liquid oil film (in other words, when the oily solid surfaces came into close contact and rubbed against each other), lubrication depended upon some property of the lubricant other than viscosity, and in default of a better term we used the term " oiliness " to designate this property.

The general experience of engineers has been confirmed by F. W. Lanchester,[1] who states as his experience, when in charge of the testing of gas engines, that if a new bearing ran hot when on test with a mineral oil lubricant, the substitution of castor oil for the mineral oil could be depended upon to remove the trouble. Mr. Lanchester also found, in experimenting with his worm-gear dynamometer, that the lubricating properties of an oil for worm gear, in which very high pressures are developed and there is much solid friction, depended more upon the nature of the oil than upon its viscosity—in fact, two oils of the same viscosity often gave entirely different frictional readings, owing to the superior " oiliness " of one oil over the other.

These observations have been confirmed and extended by experiments made at the National Physical Laboratory with the Lanchester machine,[2] in which a series of mineral oils of widely different viscosities were compared with rape, trotter, sperm, and castor oils. All the mineral oils tested gave higher frictional resistances than the animal and vegetable oils, and showed a tendency to lose their lubricating value when the temperature of the oil rose above a certain figure. No such tendency was shown when the animal and vegetable oils were used as lubricants. The particular interest of these experiments lies in the remarkable difference in behaviour between the mineral oils and the fatty oils, and the absence of any clear connection between the lubricating value and the viscosity of the oils tested. At the pressures used in these tests, the viscosity of castor oil was about six times as great as that of the trotter oil at the same temperature, and yet the frictional resistances were very nearly the same. The reduction of friction must, therefore, have been due to some property of the lubricating oil other than viscosity, and the results confirm the view that this property is possessed in greater degree by animal and vegetable oils than by mineral oils. This is the property which has come to be designated by the term " oiliness."

In many cases it is impossible to so design bearings that they shall automatically maintain a thick film of oil between the rubbing surfaces. When such is the case, and it is very necessary to reduce friction and wear to a minimum, oil is forced into the bearings under pressure by means of a pump continuously operated by the machine, and a thick oil film is thereby maintained between the surfaces. This device is being used more and more as time goes on. The moving parts of motor vehicles and aircraft engines are generally lubricated in this manner.

In cases where bearings have to run long distances without attention, ball bearings or roller bearings are now largely used. The balls, rollers, and races of such bearings will run very satisfactorily with adsorbed film lubrication only, as the contact is almost wholly rolling contact. It appears from the fore-

---

[1] Discussion on Lubrication, *Proc. Physical Society of London*, xxxii. (1919), p. 1S.

[2] *Report of the Lubricants and Lubrication Inquiry Committee*, 1920.

going that two entirely different conditions have to be considered in connection with the problem of lubrication, viz.: (1) the condition in which the solid surfaces, covered by an adsorbed film, come into close contact and rub against one another, and (2) the condition in which the solid surfaces become completely separated by a film of liquid oil which forces itself between them. In the first condition which may be termed "solid film or boundary lubrication," the efficiency depends upon the *oiliness* of the lubricant and the *unctuousness* of the solid, not upon the viscosity. In the second condition, which may be termed "liquid film or viscous lubrication," the friction depends wholly upon the viscosity of the oil. In boundary lubrication, *i.e.* in lubrication under the peculiar molecular conditions which exist close to and in contact with the boundary friction surfaces, the lubricating film, though excessively thin and behaving as a solid, may be several molecules in thickness, as will be shown when the subject is discussed in detail in Chapters II. and III.

Between surfaces lubricated by a liquid film the coefficient of friction F/W is often as low as 0·002 to 0·004, but between adsorbed solid films in rubbing contact it is very much higher, say 0·1 or even 0·30, according to the nature of the solids and liquids used.

CHAPTER II.

THIN FILMS AND SURFACE FORCES.

Oiliness and Unctuosity. It has been stated in Chapter I. that although Osborne Reynolds proved that the results obtained by Beauchamp Tower with properly lubricated journals were entirely due to the viscosity of the oils employed, it has always been known by engineers that when the supply of oil is insufficient, and when the relative velocities of the moving surfaces in contact are very slow, or the load excessive, lubrication depends on other less generally understood properties of the lubricating substance. A liquid may, in fact, have the required viscosity to keep the surfaces apart during normal conditions of running, but may fail to lubricate properly under other conditions. J. Veitch Wilson, for example, stated, many years ago, that body or viscosity is not the only quality by which the antifrictional value of an oil is determined, and that the differentiating principle must be attributed to some other property. This other property, which, when it is markedly present, makes a liquid a good lubricant, is now known as "oiliness."

To lubricate any kind of bearing, the liquids or soft solids used must give small frictional resistances when the surfaces are in relative motion *and in contact*; for this indicates that the particular kinds of surfaces which are merely wetted with them will slide more freely and easily over each other than they would if they were clean. R. M. Deeley, who made a large number of experiments to ascertain the forces required to cause lubricated surfaces to slip, found that the force varied not only with the lubricant, but also with the metals in opposition, and concluded that oiliness is rather an effect produced by the lubricant upon the surfaces, than a property of the lubricant as a liquid. Deeley[1] remarks that "the unsaturated molecules of the lubricant seem to attach themselves to the molecules of the metals they wet and form skins capable of preventing the free molecules of opposing metallic surfaces from adhering. If such be the case, it is reasonable to suppose that the friction coefficient between such metallic skins would vary with the metals as well as with the nature of the oils." When this was written, the writer was not acquainted with the work of Irving Langmuir on surface tension and thin films, work which throws a flood of light upon the whole question and makes it necessary to adopt a chemical theory of surface tension and other phenomena, rather than the classical theory, which regards these as being purely physical in their nature. Lubrication is now seen to be effected by the chemical action of various substances upon surfaces, and therefore dependent for its explanation upon a study of surface forces and *adsorbed* films.

The friction between solids also varies with the chemical nature of the substance, each solid giving a frictional resistance which is peculiar to it.

---

[1] Preliminary report communicated to the Lubricants and Lubrication Committee of the Department of Scientific and Industrial Research on 5th December 1918, and published in *The Engineer* for 21st January 1921. Also "Oiliness and Lubrication," *Phys. Soc. of London*, xxxii. (1919), 1S–11S.

This property of solids is called unctuousness or unctuosity. An adsorbed film of any lubricant gives a friction coefficient which depends not only upon its own chemical nature, but also upon the chemical nature of the solid to which it adheres chemically, and it would appear that in all cases the more unctuous the solid and the more oily the lubricant the smaller is the coefficient of static friction.

Chemical Nature of Adsorption.—As long as surface energy was regarded as being merely a physical phenomenon, little advance was made in the theory of the subject, for, generally speaking, the forces between molecules have been considered to be radial forces which vary solely as a function of the distance between them ; but when the forces are regarded as being of a chemical nature many obscure phenomena are easily explained. Irving Langmuir [1] in one of his very important papers, " On the Fundamental Properties of Solids and Liquids," remarks that " When the chemist does consider the forces acting between atoms or molecules, he does not look upon these as forces of attraction between the centres of the molecules, but he thinks rather of the specific nature of the atoms forming the molecules and the manner in which these atoms are already combined with each other. He thinks of the molecules as complex structures, the different portions of which can act entirely differently towards any given reagent. Furthermore, he considers that forces involved in chemical changes have a range of action which is usually much less than the diameter of a molecule and perhaps even less than that of an atom." He further remarks,[2] that "*All* the interatomic and intermolecular forces involved in the structure of matter are chemical forces ; that is, they are of the same nature as the forces that the chemist has been studying in the past. In general, these forces are of two kinds : those represented by primary and those represented by secondary valence." In a paper on the " Mechanism of the Surface Phenomena of Flotation," read before the Faraday Society in 1919,[3] Langmuir refers to his work on high vacuum phenomena, especially the effects produced when various metals are heated in gases at very low pressures. He says : " It was frequently found that adsorbed films of extraordinary stability were formed on the surface of the metal. The evidence from a large number of such experiments indicated clearly that these stable films consisted of a single layer of atoms chemically combined to the underlying atoms of the solid. The adsorbed atoms were chemically saturated, but the atoms in the surface of the metal were not saturated by their combination with the adsorbed atoms, and therefore remained firmly held by the next underlying layer of metal atoms. This viewpoint was based to a large extent on the work of the Braggs on crystal structure." Recent work has shown that the oriented molecules forming the surface film on a solid affect the molecules of the liquid further from the surface, and thus produce adsorbed films more than one molecule thick. Langmuir further remarks :—

" The atoms in the very stable films referred to are clearly held to the surface by direct chemical union of the primary valence type, like that holding oxygen to carbon in carbon dioxide. Further investigation showed that in some cases of adsorption, such as that of nitrogen or argon by charcoal, etc., the forces involved, although no less chemical than the others, were of the type represented by secondary valence, such as that holding water of crystallisation or ammonia in complex ammonia derivatives.

" A further extension of this theory led to the view that no fundamental distinctions should be drawn between the so-called physical phenomena and these recognised as chemical. Thus condensation of vapours, crystallisation,

---

[1] *Jour. Amer. Chem. Soc.*, xxxix. (1917), p. 1852.

[2] *Ibid.*, p. 1853.

[3] *Faraday Soc. Trans.*, xv. part iii. (1920), p. 62.

surface tension, adsorption, etc., are manifestations of forces of the same kind as those involved in the formation of chemical compounds."

In a paper on the "Relation between Viscosity and the Chemical Constitution of Lubricating Oils," read before the Institution of Petroleum Technologists in 1918, Dunstan and Thole[1] remark: "In recent years, the progress of organic chemistry has largely been due to the realisation that unsaturation, or the possession of residual affinity, plays an all-important part in the reactivity and the very personality of a compound. Colour, odour, taste, physiological activity, and, in a word, all the characteristic properties of bodies are influenced by this condition. It appears now that we may add lubricating ability to the already long list of effects proceeding from this one prime cause."

Many oils which are adsorbed by solid surfaces also spread over the surfaces of water, mercury, etc., and greatly modify their surface properties. Surface tension phenomena have been much studied of recent years, and it has been found possible to apply much of the information gained by the examination of liquid films to the elucidation of the conditions obtaining in adsorbed films on solid surfaces as well as on liquid ones. Indeed, a proper understanding of the nature of adsorbed lubricating films and their lubricating value can only be obtained from a study of the phenomena presented by films on liquids.

The investigations of Langmuir and of Harkins[2] have made it quite clear that the molecules of a liquid do not behave as spheres, but as rings, chains, etc., which have one or more unsaturated chemical affinities (stray fields) of various strengths located at the ends or other parts of the chains, the corners of the rings, etc. Thus when the molecules of any particular liquid are brought into contact with water, whether they dissolve or not depends upon whether the attraction of the molecules for each other is greater than for the water, and the orientation of the molecules on the water surface depends upon which portion of the molecule has the greatest affinity for the water. Such being the case, it cannot be stated with accuracy that the adsorbed film behaves towards the solid or liquid upon which it rests merely as would be indicated by their respective surface tensions.

Adsorbed Films on Liquids.—When a drop of lubricating or other oil is placed upon a clean surface of water of moderate area, one or both of two things may result, namely, the spreading, from the drop, of an invisible film which covers the whole surface, or the spreading of the drop itself by actual flattening over the whole surface. The formation of the invisible film has been called, by Sir William Hardy, "primary spreading," whilst the flattening out of the drop he terms "secondary spreading."[3] In the latter case, if the quantity of oil placed upon the water be not too great, the liquid may draw itself up into patterns surrounding clear spaces which are covered by primary invisible films.

A. Marcelin[4] showed that when a very small quantity of an oil, such as olive oil, is placed upon a large clean surface of water, the oil spreads rapidly upon the water surface until a definite area has been covered, and then the oil shows little or no tendency to spread further. This is a primary film in a stretched condition. The surrounding water has a surface tension much greater than that of the normal primary film of oil; but the *stretched* primary film on water has the same surface tension as water. Miss Pockels[5] showed that very small

---

[1] *Jour. Inst. Pet. Tech.*, iv. (1918), pp. 191-228.
[2] *Jour. Amer. Chem. Soc.*, xxxix. (1917), pp. 354 and 541.
[3] Hardy and Doubleday, *Proc. Roy. Soc.*, A, c. (1921-22), p. 573.
[4] "Minimum Thickness of Oil Films on Water," *Ann. Phys.*, i. (1914), p. 19.
[5] *Nature*, xliii. (1891), p. 437.

amounts of oil on the surface of water produce films which have the same surface tension as the surrounding water, but that the surface tension begins to decrease when the amount of oil produces a film just greater than is necessary to cover the whole water surface. Further additions of oil result in the covering of the whole surface, and a lowering of the surface tension occurs as additions of oil are made until the tension proper to the oil film is reached.

On chemically clean water it must not be supposed that the surface differs, other than in a possible difference in the arrangement of the molecules, from the water beneath. In the interior, a molecule is attracted by other surrounding molecules in accordance with its chemical affinities. Indeed, in a liquid we must suppose that a large proportion of the molecules, at any given time, are chemically bound to each other, whilst others are free, a constant interchange between the bound and free conditions occurring. However, in the case of a liquid when a bond is broken, due to heat vibration or other causes, the same bond is not necessarily made again, especially if the liquid be subjected to stress, and it is to this that the mass owes its viscosity. When the bonds that break are remade as before, even under stress, then the substance is a solid.

At the surface, when in contact with a gas or immiscible liquid, the attraction outwards is more or less lacking, and the molecules tend to be pulled inwards, and so decrease the surface area. However, for many purposes, the effect may conveniently be regarded as producing a surface tension. N. K. Adam[1] has recently discussed this subject.

Films on liquids may be either in the solid or liquid state, the two forms behaving quite differently. Langmuir studied both solid and liquid films. In the case of palmitic acid, which is a solid, when the maximum area of the monomolecular film on water is much reduced, all dust particles in the film become fixed in their relative positions, the film becomes solid and, with further reduction in area by pressure, begins to crumple, and a peculiar appearance (strain lines) is often observed on the surface. This phenomenon may be seen on a pool of water when the surface film of foreign matter is blown against the side by the wind. Liquid primary films, on the other hand, such as cetyl alcohol, which is ordinarily a solid, and oleic acid, preserve their mobility even when allowed to contract to very small fractions of their maximum areas on a water surface.

After a solid film has been crumpled up, it will not expand again on releasing the pressure. Liquid films spread out again, but often with marked hysteresis effects. In solid films, the molecules adhere to each other as they do in a solid body, and form a rigid structure adhering to the water surface; but in the case of liquid films, individual molecules are shot out as the film contracts, and it becomes more than one molecule thick in places, or all over if the decrease of area be sufficient.

Solid monomolecular films do not show a measurable surface tension, any more than do solid masses; for, as Adam points out, they offer resistance to compression. However, as already stated, it often occurs that a film of small area, resting upon a water surface, is stretched by the surface tension of the surrounding water surface, and in this stretched condition the molecules become mobile and the film behaves as a liquid one does.

Although Devaux, Rayleigh, Miss Pockels, and many others, had studied surface tension phenomena, the first detailed experiments on the behaviour of liquid and solid films with change of area were made by Irving Langmuir,[2] described in his paper on "The Constitution and Fundamental Properties of Solids and Liquids," with an apparatus therein illustrated. These and other

---

[1] *Nature*, cxv. (1925), pp. 512–513.

[2] *Jour. Amer. Chem. Soc.*, xxxix. (1917), p. 1869.

experiments were repeated by N. K. Adam[1] with a similar apparatus improved in some details. With this apparatus, Adam obtained results showing more clearly the phenomena accompanying the expansion and contraction of adsorbed films on water.

Although the credit for the elucidation of the molecular structure of thin films mainly belongs to Langmuir, we shall illustrate the apparatus used by N. K. Adam when we come to deal with apparatus for determining surface tension values.

In Miss Pockels' and in the late Lord Rayleigh's experiments, a very small amount of oil was placed on a water surface contained in a long, narrow trough. The oil was prevented from spreading over the whole surface by barriers consisting of strips of glass placed across the tray and resting on the edges. By sliding these barriers along the tray, the area of water over which the given quantity of oil may spread could be varied at will. Rayleigh measured the surface tension of the contaminated water between the barriers by Wilhelmey's method, which will be presently described. As the thickness and area of the oil film was varied by shifting the position of one of the barriers, the surface tension changed.

The nature of the change in the surface tension of palmitic acid, obtained by Adam,[2] is shown in fig. 1. Here the ordinates are dynes per centimetre. The experiments were made at 20° C., at which temperature the surface tension of water is 72·8 dynes per cm. The areas per molecule are expressed in terms of the unit 10^{-16} sq. cm. (Ångström units—Å.U.). Adam makes the ordinates compressions in dynes per cm., the pull of the clean water surface at the end of the trough being ignored for convenience.

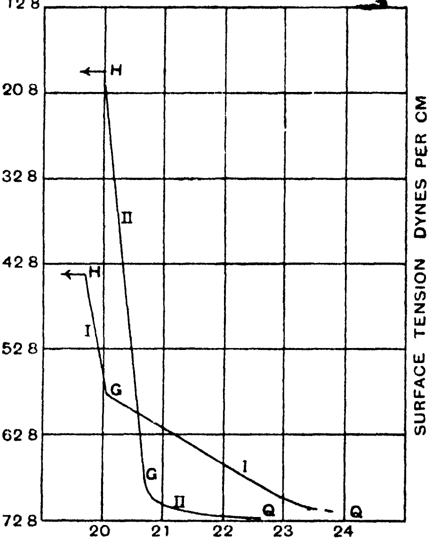

FIG. 1.

When the area of the trough in which the experiment is made is reduced so that the surface tension begins to decrease at the point Q, motes on the film-covered surface cease to be blown about by the air blast, denoting that the film has assumed the solid form. Solidification usually occurred on neutral solutions at Q, and on acid solutions at or soon after the steep part of the curve was reached. Below H, where solid films begin to crumple and liquid films to contract without further decrease of surface tension, the films are one molecule in thickness, and show little signs of hysteresis.

Both curves I. and II. (fig. 1) are for palmitic acid. The curve II. is obtained when the water has rested in the trough for about five days before the experiment is made. The molecular chains pack themselves closely and very quickly; but with fresh distilled water curve I. is obtained, the molecules packing themselves much more slowly. Only the fatty acids show this phenomenon, and the solution must be near a hydrogen ion concentration of P_{H6}. Whether

---

[1] *Proc. Roy. Soc.*, A. xcix. (1921), pp. 336–351; *ibid.*, A, ci. (1922), pp. 452–472; and *ibid.*, A, ci. (1922), pp. 516–531.

[2] *Ibid.*, A, ci. (1922), p. 457.

this difference is due to the molecules of the water which has been still for some time having oriented themselves in some manner which affected the film is not certain. The experiments on palmitic acid were made at temperatures between 10° and 20° C., no measurable change in the curves occurring over this range, as plotted by Adam's method.

In the case of myristic acid, the curve changes from the form shown in curve I. to that of curve II. (fig. 2), with rise of temperature. The curves for this substance are shown for a number of temperatures. Adam calls such films "expanded films." The condition of the palmitic acid film II. (fig. 1) is the condensed form, the substance being either in the liquid or solid condition. At a certain temperature the films expand markedly along the surface, the actual amount of expansion with rise of temperature depending both on the nature of the substance forming the film and on the composition of the solution.

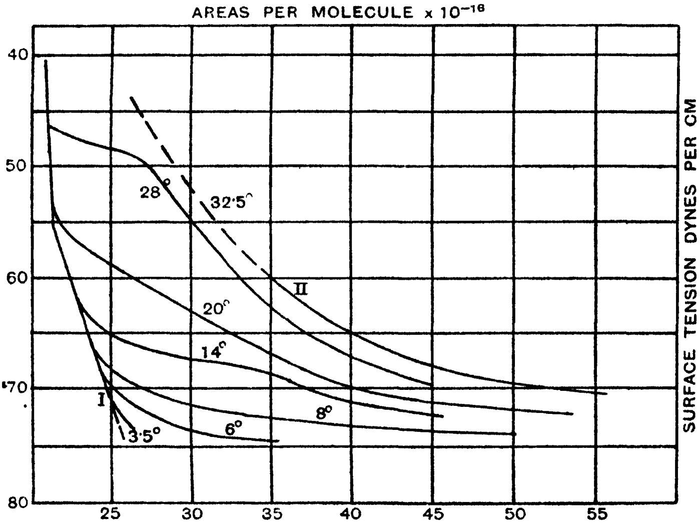

FIG. 2.

The curves in fig. 2 are stated in terms of surface tension, the curves given by Adam having been altered in accordance with the fall of surface tension with rise of temperature. Water at 20° C. is taken as 72·8 dynes per cm., and the decrease of surface tension with fall of temperature=0·141 dynes per cm. per degree Centigrade.

Devaux [1] determined the areas dominated by the molecules of monomolecular films from weighed amounts of oil. To do this he prepared a dilute solution (1 : 1000) of the oil in pure benzene and placed one or two drops of this solution upon the surface of the water. The benzene evaporated and left the oil on the surface, covering a measurable area. Knowing the volume of the oil added in this manner and the area covered by it, the thickness of the film was readily calculated. The accuracy of this method is based upon the assumption that the film has the same density as the oil in bulk.

There must be some uncertainty as to the significance of these molecular areas, for they are the areas dominated by both the molecules in the film and

---

[1] **Devaux published a large number of papers between 1913 and 1914. A review of his work up to 1913 was published in the *Annual Report of the Smithsonian Inst.*, 1913, p. 261. Sub. papers are *Soc. franc. phys.*, lv. (1914), p. 3, and lvii. (1914), p. 3.**

the molecules of the liquid upon which they rest. The significance of this will be seen when we come to deal with lubricating films in Chapter III.

Benzene molecules (C_6H_6) have been found to arrange themselves so that the rings lie flat on the surface of the liquid, since the flat sides of these rings are the least active portions of the molecules. Kekulé's ring-formula, showing the arrangement of the carbon and hydrogen atoms, has been very generally accepted. Sir William Bragg[1] has studied the structure of organic crystals by X-ray methods, and concludes that in naphthalene ($C_{10}H_8$) the structure is as shown in fig. 3. Here the molecules retain their identity in the solid; but the carbon atoms are not all in the same plane, as Kekulé supposed. It is certain, therefore, that Langmuir's suggestion that the benzene molecules do rest flat on the water surface when they form a monomolecular layer is correct. If an active group, such as OH, is substituted for one of the hydrogen atoms in the benzene ring, forming phenol or carbolic acid, this group is drawn into the body of the liquid, tilting the benzene ring up on edge; but when two such active groups replace hydrogen atoms on opposite sides of the ring, then the whole molecule lies flat on the water.

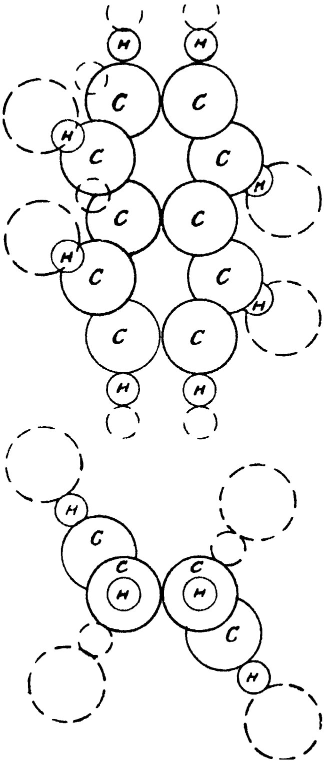

FIG. 3.—Arrangement of Atoms in the Naphthalene Molecule ($C_{10}H_8$). Dotted atoms show nature of bonding to atoms of adjacent molecules.

It is natural to assume that the reason for the spreading of an oil upon water is that there is an attraction between certain atoms or atomic groups in the molecules of the oil and the water. If the molecule as a whole should have an attraction for the water greater than it has for itself, then the oil would be soluble in the water; but in cases when one atomic group of the oil molecule has an attraction for the water, and the other portions of the molecule attract each other more powerfully than they attract water, then the oil spreads over the water as a film, the more active group being immersed and the less active group forming the external surface of the layer. Langmuir[2] remarks:

"Acetic acid is readily soluble in water because the COOH group has a strong secondary valence by which it combines with water. Oleic acid is not soluble, because the affinity of the hydrocarbon chains for water is less than their affinity for each other. When oleic acid is placed on water the acid spreads upon the water because by so doing *the* COOH *can dissolve in the water* without separating the hydrocarbon chains from each other."

In another paper[3] Langmuir says: "The same theory has been applied to surface tension phenomena in general. According to this theory, the molecules of organic liquids arrange themselves in the surface layer in such a way that

---

[1] *Nature*, cx. (1922), p. 117.

[2] *Jour. Amer. Chem. Soc.*, xxxix. (1917), p. 1850.

[3] "The Mechanism of the Surface Phenomena of Flotation," *Trans. of the Faraday Soc.*, xv. (1920), p. 65.

their active portions are drawn inwards, leaving the least active portion of the molecule to form the surface. Surface tension is a measure of the potential of the stray field extending out from the surface layer of atoms. The molecules of the surface layer arrange themselves so that this potential energy is a minimum. The surface energy of a liquid is thus not a property of the molecule as a whole, but depends only on the *least active portions of the molecules* and on the manner in which these are able to arrange themselves in the surface layer."

Langmuir also deals with the surface conditions of liquids which result when solution takes place. He[1] remarks: "In moderately concentrated solutions of all substances which strongly depress the surface tension, the surface consists of a layer, *one molecule deep*, of the dissolved substance, and there is never a transition layer in which the concentration varies progressively as we go further from the surface into the solution." It is certain, however, that some surface films are more than one molecule deep, especially when they are on solids.

When oleic acid is placed on water, the carboxyl groups dissolve in the liquid; that is, they combine with water chemically (by secondary valence). The long hydrocarbon chains have too much attraction for each other, however, and too little for water, to be drawn into solution, and when the quantity of oleic acid is small all the carboxyl groups combine with the water without causing the hydrocarbon chains to separate from one another, and a monomolecular layer of finite size is formed.

Oils without active groups, such as pure paraffin oil, benzene, cymene, etc., do not spread at all, for their molecules attract each other more powerfully than they do the molecules of water.

When more oleic acid is placed on a water surface than is necessary to cover it, a monomolecular film is also formed, the excess of oil gathering itself up in lenticles. This is due to the fact that the upper surface of the molecular layer is composed entirely of hydrocarbon chains, for which the carboxyl groups of the excess of oil have less affinity than they have for each other.

Langmuir has studied the phenomena presented by the surface films on water of a large number of substances, and finds that on the above assumptions the facts can be readily accounted for. The old classical theory of surface tension, which did not take into consideration the chemical affinities of the substances, failed completely to account for the more important facts.

Adsorbed Films on Solids.—Although comparatively little work has been done to elucidate the nature of films adsorbed by solid surfaces, there can be little doubt but that they are of much the same nature as those on liquids; *i.e.* when they are liquid hydrocarbons they form films on solids, the most active portions of the molecules being attached by chemical bonds to the solid surface.

According to Langmuir,[2] the mobility of a liquid is due to a shifting of the relative positions of atoms which are all chemically combined with each other. A similar theory was suggested by R. M. Deeley[3] to explain the viscosity of ice. If the forces holding solid bodies together are chemical forces represented by primary or secondary valence, then there is every reason for believing that chemical forces are also responsible for holding the atoms and group molecules of liquids together. Conversely, all the experimental evidence we find regarding the chemical nature of the forces within liquids may be considered as additional evidence in favour of a similar theory for solids.

---

[1] *Proc. Nat. Acad. Sci.*, iii. (1917), p. 256.

[2] "Fundamental Properties of Solids and Liquids," *Jour. Amer. Chem. Soc.*, xxxix. (1917), p. 1858.

[3] *Phil. Mag.*, xxv. (1888), pp. 156–162; *Proc. Roy. Soc.*, A, lxxxi. (1908), pp. 250–259.

Assuming the correctness of Langmuir's views, solids should adhere to solids when brought into contact, just as liquids do. Such adhesion must be distinguished from the spreading of liquids over solids. If the attraction of the molecules of the liquid for themselves is greater than for the solid they rest upon, they will not spread over a solid or liquid but may be caused to form a film by condensation. Pure paraffin oil will not spread over water, nor will it spread over a metal; but it may form an adsorbed film on a solid surface rubbed over with it. Liquid mercury on iron adheres to the solid surface and forms an adsorbed film; but when the mercury is separated from the surface this absorbed film is apparently torn off by the tension of its surface.

Wilson Taylor[1] states that mercury spheres, with diameters from 0·05 mm. to 2·25 mm., can be suspended from the underside of a glass surface. They are attached to the glass either directly or by suspending them in water adhering to the glass and allowing the water to evaporate. The mercury surface is joined to the glass surface in the periphery of a wide circular contact area, and forms an angle with the glass surface.

If liquids and soft solids will adhere to solid surfaces, there is no reason why hard solids should not adhere also. Langmuir's conception that the forces which cause adsorption are chemical in their nature, throws much light upon the phenomena of adhesion; for on this theory the intensity of the union will depend upon whether the chemical bonds causing it are of primary or secondary valence, or are merely due to unsaturated affinities. It must be remembered that solid surfaces cannot be so accurately made as to touch at more than a few points.

We have, it will be seen, ample evidence that lubricants and other liquids and soft solids adhere chemically to surfaces upon which they are spread, and that such films adhere in accordance with their chemical affinities at ordinary temperatures. An adsorbed film on water may be in either the liquid or solid condition; but even liquid films on solid surfaces form films that may be regarded as being in the solid condition; for the molecules are fixed on a rigid surface. Solid surfaces consequently have their unctuousness (slipperiness) entirely altered by the presence on them of an adsorbed film.

Theory of Surface Tension.—Reasons have already been adduced in support of the view that the molecules of both solids and liquids have a powerful chemical attraction for each other when brought into close juxtaposition. In the amorphous state, the chemical valence bonds of the molecules or atoms would appear to be irregularly satisfied. In the crystalline condition the several bonds, regularly and selectively uniting, result in the formation of a very perfect space-lattice system. Even in the liquid state, where a large number of the molecules or atoms are combined chemically, whilst others are more or less free, the structure of the combined molecules may be similar to that of an amorphous solid; but there is a tendency even in liquids to form a regular skeletal structure, such as is found in liquid crystals.[2] When a liquid is allowed to spread over another liquid with which it is not miscible, the stray surface fields result in the formation of a strikingly regular orientation of the molecules at the interface, an orientation which may affect the molecules of both liquids; or, when a soft solid rests upon a solid, it may result in the formation of stratified layers in the soft solid. Sir William Bragg[3] states that when a small quantity of fatty acid is placed upon a plate of glass or mica, either by melting or pressing, a formation of layers results, much more so by the latter operation than by the former, for it would appear that the pressing and working encourages the arrangement of the molecules in a regular manner.

---

[1] *Nature*, cix. (1922), p. 10.

[2] H. A. Miers, *Science Progress*, i. (1897), pp. 119–128.

[3] *Nature*, cxv. (1925), p. 267.

Langmuir[1] says: "According to this theory, the group molecules of organic liquids arrange themselves in the surface layer in such a way that their active portions are drawn inwards, leaving the least active portion of the molecule to form the surface layer. By 'active portion of a molecule' is meant a portion which is characterised by a strong stray field (residual valence). . . . Surface tension (or surface energy) is thus a measure of the potential energy of the electro-magnetic stray field which extends out from the surface layer of atoms. The molecules in the surface layer of the liquid arrange themselves so that this stray field is a minimum."

The surface energy of a liquid is thus not a property of the group molecules, but depends only on the *least active portions of the molecules* and on the manner in which these are able to arrange themselves in the surface layer.

It is clear that the molecules in the interior of a liquid are attracted by other molecules on all sides. On the other hand, those at the surface are differently situated, for the forces are then not even approximately equal in all directions. In other words, the molecules in the surface layer have their attractive forces only partially satisfied and their stray fields are striving to reduce their number, and, therefore, to decrease the surface area. Any increase of the surface area involves an increase in the number of molecules whose attractions (stray fields) are not satisfied, and to effect this work must be done. We thus have all liquid surfaces tending, with considerable force, to contract their surface areas, and exhibiting the phenomena of superficial tension. The resultant effect of the mutual attractions (chemical affinities) between different portions of a fluid really gives the same result as would be obtained if the liquid were "absolutely deprived of the attractive forces of its molecules, and its whole surface coated over with an infinitely contractile film, possessing a uniform contractible force."[2] This is a convenient way of illustrating the contractible film; but, as we have seen, it does not explain many of the most important facts.

Liquid and Solid Interfaces.—Even when we have the surfaces of two different liquids, or two different solids, in contact, the molecular stray fields may not be completely satisfied at their interfaces, and they may be unable tc mix, owing to the molecules of each liquid, or solid, attracting each other more powerfully than they attract the molecules of the other liquid or solid. When two such immiscible liquids are in contact, the interface is in a condition of strain (surface tension).

Lord Kelvin, who carried out a number of experiments on the behaviour of dissimilar liquids when in contact, found it convenient to employ carbon disulphide and a solution of zinc sulphate, as no immediate or injurious chemical or physical action results on bringing such liquids together. Additional advantages arise from the fact that carbon disulphide assumes an intense violet coloration with iodine, which enabled observations to be more readily noted; while the zinc sulphate solution could be adjusted to any desired density. When both liquids were of the same density, it was found that globules of either suspended within the other assumed a spherical condition, as the result of the tension at their surfaces of contact.

Shapes of Molecules.—In the classical theory of surface tension it was tacitly assumed that the thickness of the film gave the *diameter* of the molecule. Langmuir, however, from his measurements of the areas covered by films of various substances, has been able to calculate the *lengths* and *cross-sections* of molecules, and has shown that they differ widely.

---

[1] "The Constitution and Fundamental Properties of Solids and Liquids," *Jour. Amer. Chem. Soc.*, xxxix. (1917), p. 1849.

[2] Kelvin, *Popular Lectures and Addresses*, i. (1891), p. 16.

The oil or solid fat experimented upon was dissolved in freshly distilled benzene (usually 50 mg. in 100 c.c.), and by means of a calibrated dropping pipette, one or two drops of the solutions were placed upon a clean water surface in a photographic tray, and the maximum area covered by the film was measured. Dividing this area by the number of molecules of oil on the surface, the area of water covered by each molecule was readily obtained, and knowing the area of the film and its volume, the lengths of the molecules were also obtained. Some preliminary measurements by Langmuir[1] are given in Table I.

TABLE I.

Substance.	Cross-section, sq. cm.	Length, cm.	$\sqrt{\text{Cross-section}}$, cm.
Palmitic acid, . .	21×10^{-16}	24×10^{-8}	$4{\cdot}6\times10^{-8}$
Stearic acid, . .	22×10^{-16}	25×10^{-8}	$4{\cdot}7\times10^{-8}$
Cerotic acid, . .	25×10^{-16}	31×10^{-8}	$5{\cdot}0\times10^{-8}$
Tristearin, . .	66×10^{-16}	25×10^{-8}	$8{\cdot}1\times10^{-8}$
Oleic acid, . .	46×10^{-16}	$11{\cdot}2\times10^{-8}$	$6{\cdot}8\times10^{-8}$
Triolein, . . .	126×10^{-16}	13×10^{-8}	$11{\cdot}2\times10^{-8}$
Trielaidin, . .	120×10^{-16}	$13{\cdot}6\times10^{-8}$	$11{\cdot}0\times10^{-8}$
Cetyl palmitate, .	23×10^{-16}	41×10^{-8}	$4{\cdot}8\times10^{-8}$
Myricyl alcohol, .	27×10^{-16}	41×10^{-8}	$5{\cdot}2\times10^{-8}$

An examination of these results shows that the cross-sections of the molecules vary over quite a wide range—from 21 to 126×10^{-16} sq. cm. The three saturated acids, palmitic, stearic, and cerotic, all occupy nearly the same areas ($21-25\times10^{-16}$ sq. cm.), notwithstanding the fact that the number of carbon atoms in the molecules increases from 16 to 26. Each tristearin molecule covers a space of 66×10^{-16}, which is exactly three times that of a stearic acid molecule. Furthermore, the molecule of cetyl palmitate takes up an area of 23×10^{-16} sq. cm., which is again about the same as that of stearic acid. Thus we see that each 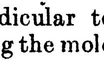 $-\mathrm{C}(=\mathrm{O})-\mathrm{O}-$ group occupies an area of about 23×10^{-16} sq. cm., no matter whether it occurs in an acid or in an ester. This area is substantially independent of the length of the hydrocarbon chain to which the active group is attached. As all these areas were measured on water surfaces, they may be dependent in some measure upon the sizes of the water molecules to which they were attached, and may require revision.

We may also, as stated, calculate the length of the molecules in a direction perpendicular to the surface. The volume of each molecule is found by dividing the molecular volume of the oil by the Avogadro constant. By dividing this volume by the cross-section of each molecule, the length of the molecule in a direction perpendicular to the surface is given. The results are set out in the second column of Table I.

It is interesting to compare these lengths with the cross-sections. As a rough approximation, Langmuir assumed that the dimensions of the molecule in directions parallel to the surface can be found by taking the square root of the cross-section. This is equivalent to assuming that each molecule in the surface film occupies a volume represented by a square prism with its axis vertical. The length of the square side, which we shall refer to as the average

---

[1] *Jour. Amer. Chem. Soc.*, **xxxix.** (1917), p. 1865.

diameter, is given in column three of Table I., while the height of the prism (a length of the molecule) is given in the second column.

It is seen at once that the molecules are very much elongated. Thus the length of the palmitic acid molecule is about 5·2 times the average diameter. The results prove that the molecules arrange themselves on the surface, with their long dimension vertical. Sir William Bragg[1] thinks that in all cases the long dimension of the molecule may not be quite perpendicular to the plane of cleavage.

The molecule of tristearin has the same length (perpendicular to the surface) as the stearic acid molecule, but three times the cross-section. Thus each of the three active groups has been drawn down to the surface of the water, while the hydrocarbon chains are packed in side by side and are erect upon the surface.

Surface Tension of Solids.—In solids, as in liquids, the surface molecules have stray fields, which enable them to adhere to other substances and form adsorbed films on their surfaces. The surfaces of solids must, therefore, be in a state of tension; but, in this case, it is only in rare instances that the stresses are sufficiently powerful to produce perceptible deformation of the mass. Very viscous liquids, such as pitch, do show the reality of the stress, even when the liquids are so viscous that they act very much as brittle solids do; for in the course of time, they round off their sharp corners and show all the peculiar surface tension phenomena of mobile liquids. A piece of glass, having sharp cutting edges, when heated rounds off its corners. It would scarcely be reasonable to argue that superficial tension only comes into existence the moment the solid is softened by the heat. Rather must the surface be regarded as being in a tense condition even when solid, and this tense surface rounded off the corners as soon as the material was soft enough.

Very little is really known, as the result of direct experiment, of the nature of adsorbed films on solids. They are doubtless similar to those on liquid surfaces, and in Chapter III. will be more fully dealt with.

Soap (Bubble) Films.—If the looped end of a piece of wire be dipped into a solution of soap and water and then removed, there will be seen stretched across the loop a thin diaphragm of liquid. Such a film possesses considerable elasticity and strength, as may be proved by placing upon it a small moistened wire ring, which it supports without breaking. In other words, the film somewhat resembles a sheet of indiarubber, some force being required to stretch or distort it. Such films are of a very complex character and have received a good deal of attention. Sir William Bragg has dealt with this subject recently in a discourse delivered at the Royal Institution.[2]

The orientation of the molecules in liquids or soft solids is often greatly affected by what takes place at their bounding surfaces; for what is found in the interior of a body is often of much less importance than the composition and state of its surface film. When soft solids are in contact with solid surfaces, or when films are formed, such as those of bubbles, the molecules are often oriented so as to form not merely one film, but to form several similar ones in close juxtaposition.

When a bubble is near its end a black patch often appears, and soon afterwards the bubble bursts. The patch is black because it is so thin, and therefore reflects little light. Reinold and Rücker, Rayleigh, Johannot, and many others, were greatly interested in the sharpness of its outline, its thinness, and the uniformity of its texture. They recognised two degrees of blackness, as Newton had done long before.

---

[1] *Nature*, cxv. (1925), p. 267.

[2] *Ibid.*, p. 266.

The thin films of bubbles have recently been closely studied by Perrin. Sir W. Bragg[1] says: " Our knowledge of these details is due to the beautiful work of Perrin, published in 1918, and to its repetition by Wells in 1920. To state Perrin's results very briefly, it appears that the two degrees of thickness first observed are due to the existence of a very thin, uniform film and its doubling, as had already been shown; that the existence of three more degrees of blackness observed by Johannot was due to further repetitions of the same layer, and that a close examination revealed the existence of dozens of these layers, all multiples of the same fundamental thickness. In the blackest spot there was but one layer, and this was, strangely enough, the most stable of all. Other similar layers could be found superadded, like sheets of paper of the same uniform thickness, until the film was thick enough to show the rich colours of Newton's rings which the soap film ordinarily displays. . . . The examination of crystal forms by means of X-rays shows that the peculiar arrangement of the molecules in these films on water extends also to the solid crystal in a great number of cases, and may probably be considered as characteristic of the structure of a large and important class of substances."

In the stratified layers already mentioned as being formed when small quantities of solid fats, or even of some liquids, are pressed on glass or other solid substances, we have the very same formation that Perrin observed in the liquid films.

The film thus formed is a real crystal, because it contains all the molecular orientations. The black spot is simply the thinnest possible flake of oleic acid. The solution from which the oleic acid has separated cannot be made to enter between the two surfaces now united in crystalline fashion. *These films slide over each other with little if any friction.*

J. C. M'Connel[2] appears to have been the first to observe that ice is capable of being deformed without fracture in its crystalline state by small stresses in a direction at right angles to the optic axis. R. M. Deeley[3] remarks: " We may, I think, fairly conclude from a consideration of M'Connel's experiments, and those above described on pitch, that the nature of the shear which can be produced in an ice crystal at right angles to its optic axis very closely obeys the laws of viscous flow . . . a crystal of ice being liquid along one plane only."

Wetting of Solids.— The behaviour of liquids in contact with solids varies greatly. A particular liquid does not, for instance, act towards all solids in the same way. Water will wet and spread over a clean sheet of glass, but when a drop of water is placed upon a sheet of solid paraffin, it draws itself up into a bead. Mercury will not wet any known solid with which it does not amalgamate, the mercury being torn off wholly when the bead is removed. The stray fields of the mercury atoms at the surface attract the solid less forcibly than the attraction of mercury atom for mercury atom. Fortunately there are a large number of oily liquids and solids which spread over and wet the surfaces of metals, etc., and they adhere so strongly that it is difficult to displace them. Liquid lubricants also wet such materials as cotton and worsted, and siphon through wicks made of them.

It was at one time thought that in every case a liquid of lower surface tension than the solid would spread over the solid if the solid surface were uncontaminated. However, cases are known in which this does not occur. Pure paraffin oil, for example, will not spread over the surface of water.

---

[1] *Nature*, cxv. (1925), p. 266.

[2] *Proc. Roy. Soc.*, A, xlix. (1891), p. 323.

[3] *Ibid.*, A, lxxxi. (1908), p. 258.

A slip of clean glass dipped into a surface of water or oil, and then withdrawn, will be found to have a thin film adhering to it. The film may consist of two or more surface layers covering the glass, and the free liquid may all flow away, leaving a monomolecular or multimolecular film of the substance on the glass. If the plate be held vertically and partially immersed in a vessel of the liquid, the film on the glass becomes continuous with the surface layer of the water or oil, and it will be observed that the liquid surface where it meets the solid is distorted, in the manner shown in fig 4.

Here the surface layer of the liquid in the vessel is in a state of tension, the external surface on the raised glass plate is in a similar state of tension, and the two stresses are acting at right angles to each other. To balance these tensions a small quantity of water, shaded in the figure, is lifted above the general level, and the free surface becomes curved. The weight of the water or other liquid raised is a measure of the superficial tension of the vertical surface layer or film which covers the glass, just as the load on a spring-balance is a measure of the stress on the spring.

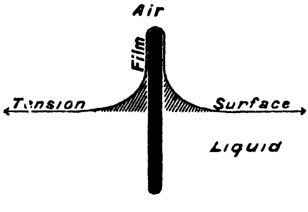

FIG. 4.

Cause of Wetting.—Langmuir considers that the spreading of an oil upon water is due to the presence of an active group in the molecule; that is, some group of atoms which has a marked affinity (secondary valence) for water. Pure paraffin oils composed of saturated hydrocarbons which are without such active groups, and have a greater affinity for each other than they have for water, do not spread at all, neither do such substances as benzene, cymene, etc. But it is possible to form films of such substances upon water by condensing their vapours upon it.

It has been supposed, as we have already remarked, that a substance with a low surface tension would spread upon one which has a higher surface tension. This, however, is not correct, as the influence of chemical affinity is all important. Some substances, when they are placed on a solid surface, spread all over it spontaneously, forming a thin film. Others will only form such adsorption films when they are smeared over a clean, solid surface, or have a measurable vapour pressure. In the latter case, it is the vapour that condenses on the surface and the film slowly spreads.

Capillarity.—Although this is merely a striking manifestation of superficial tension, it is commonly known as capillary attraction, having in the first instance been studied in connection with capillary-tubes.

When experimenting on capillary phenomena, care should be taken that all tubes, etc., are quite clean; for one adsorbed film is not always easily displaced by another. Thus if a steel needle be heated, dipped in water, and then dipped in oil, the oil will not displace the water at once. Similarly, if the needle be first dipped in oil, water will not wet it. As a clean tube or surface may be quickly contaminated by a greasy film deposited from the atmosphere, it is well, after cleaning the tube, to at once moisten it all over with the liquid to be experimented upon.

When a capillary tube which has thus been cleaned and moistened is dipped into a beaker of water, the liquid rises rapidly in the bore, and may reach a height of an inch or more. When this takes place in a moist atmosphere, the whole of the surface of the tube, both internally and externally, is covered by a film of water which is continuous with the water in the beaker. On the outside of the tube, the vertical stress of the film raises a small ring-shaped mass of water above the general surface level, the weight of which just balances the tension of the film. On the inside of the tube, the tension of the film covering the walls of the bore draws up a long column of water, which also balances the tension of the internal surface film, and is a measure of the pull. The volume of liquid forming this liquid column is much more easily measured than that of the raised ring outside the tube.

Siphoning of Wicks. -In order to secure the rise of a liquid column above the general surface, it is by no means essential that a tube should be used. A few parallel lengths of wire or thread, held so as to enclose a small space, will produce the same affect.

Fig. 5 is an enlarged section of four parallel wires which dip vertically into the liquid. Between these wires superficial tension surfaces form, and furnish walls which act much as the walls of a rubber tube would, converting the bundle of wires into a tube up which the liquid rises.

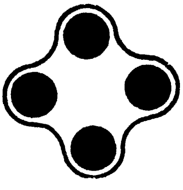

FIG. 5.

A worsted thread or a lamp wick is really a similar contrivance, and as the strands are very fine and close together, the liquid often rises to a considerable height. So long as the liquid wets the threads, the liquid rises to a height depending upon the fineness of the capillary spaces and the strength of the film. When such a partially immersed wick hangs down outside the vessel containing the liquid, if the lip of the vessel be not too high above the liquid surface, then the wick constitutes practically a number of small siphons, through which the fluid flows. In such capillary passages the flow is steady, and the volume passed is directly proportional to the head and inversely proportional to the length of the wick and the viscosity of the fluid.

Fig. 6 shows such a case. Here the height h of the column producing the flow is measured from the surface of the vessel containing the oil to the end of the wick or the surface of the vessel into which it flows, whilst the length a of the wick gives the length of the capillary passages.

From Poiseuille's formula for the flow of liquids through capillary tubes we find that the volume passed in t seconds is

$$V=C\frac{g\rho ht}{\eta a},$$

the value of C varying with changes in coarseness and texture of the wick.

It must be remembered that in the case of siphon wicks, the external wall in contact with the air, along which the liquid flows, is a liquid film; consequently, if the suction at the top of the siphon exceeds a certain limit, the liquid film walls give way, air is drawn between the strands, and siphoning ceases. On this account, strands of worsted, which consist of rather coarse fibres, can only be depended upon to raise the liquid over a lip rising about 1¼ inches above the liquid surface. When a higher lift is required, as in lamp wicks and the strands used to supply lubricants to railway axle pads, cotton, pleated very finely, is used instead of worsted.

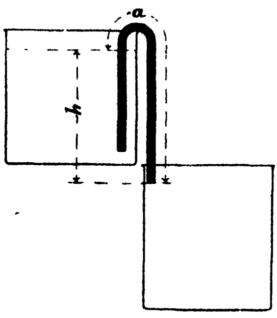

FIG. 6.

All such wicks, pads, strands of worsted, etc., when exposed to the air, absorb moisture and other substances. Oil will not, therefore, flow freely through them until they have been well cleaned and dried, and then wetted with the liquid in which they are to work.

Circumstances which modify Surface Tension.—*Temperature.*—If a thin film of oil be spread over the upper surface of a metal plate, and a hot iron be caused to touch the underside, the oil will shrink away from the heated spot and leave it almost clean. This is caused by a decrease in the tension of the heated oil surface, and the consequent drawing away of the oil by the cooler surrounding film

It appears that with rise of temperature the surface film tensions of all liquids diminish, and less energy is required to separate their molecules. Thus, in converting water into steam at 212° F., 965·7 units of heat per lb. are required, whereas at 374° F. 649 suffice.

Owing to this reduction of surface tension by heat, the oil film on a heated bearing is drawn away from the rubbing surfaces by the greater superficial tension of the film on the surrounding cool parts, and the lubrication becomes more and more defective as the bearing gets hotter, owing to the creeping away of the oil, as well as to its lessened viscosity.

Solvent Power of Surface Films. There is reason to believe that the solubility of liquids, and also of gases in liquids, follows different laws in surface films, where the molecules are in peculiar conditions of strain, than it does in the interior of liquids.

This may be shown in many ways. For instance, a thin disc of camphor, so placed that it is half-immersed in clean water, will in the course of a few hours be cut through by the superior solvent action of the surface film. In some cases the action is reversed, and the mass of the liquid displays a greater solvent power than the surface layer.

The superior solvent power of a water film over the mass of the liquid has been shown by Dupré and Rayleigh, who found that, at the first moment of their formation, surfaces of soapy water have hardly less tension than pure water, but that the molecules of the dissolved soap gradually collect in the film and greatly modify its properties.

This concentration of the dissolved substance in the surface film also takes place when the interface is one separating a solid from a liquid, for it has long been known that vinegar can be partially deprived of its acid by filtration through pure quartz sand.[1] Potato spirit, if filtered through clean sand, passes water first, then alcohol, and finally alcohol plus fusel oil.

Gore[2] made a number of interesting experiments on the behaviour of various aqueous solutions in contact with finely divided silica. He found that, on agitating dilute solutions of acids, alkalies, and salts with this powder, and allowing it to subside, the solid in many cases abstracted as much as 80 per cent. of the dissolved compound.

This concentration of a dissolved substance on the contact surface of the liquid with the solid enables a lubricant to be applied with ease, and without serious waste, to the friction surfaces of hydraulic machinery. The more or less soluble lubricant, usually soft soap, is added to the water before it enters the pipes, and then, by concentrating upon the rubbing surfaces, lubricates them and greatly reduces the friction and wear.

Measurement of Surface Tension.—*The Force to be Measured.*—We have seen that the surfaces separating solid, liquid, and gaseous substances from each other are in a state of tension, and that the magnitude of this tension varies with the nature of the substance or substances in contact, or, when the surfaces are not clean, with the nature and extent of the adsorbed contamination film. Such surfaces, when they are in the liquid condition, act like stretched sheets of india-rubber, but the tension is always the same in all

---

[1] Gmelin's *Handbook of Chemistry*, i. 114.

[2] *Chem. News*, lxix. 22.

directions, and has the same value however much the film may be extended, so long as it is in contact with excess of liquid.

In fig. 7, let ABCD be a stiff wire frame upon which the cross wire PQ slides freely. In the area enclosed by the wire is a liquid film, a measure of the tension of which is required. This film, it will be remembered, may consist of two tension surfaces which pass round and grasp the wire frame and slider on all sides. The two surfaces are separated from each other and from the surface in contact with the wire by an inactive liquid layer of variable thickness. The active liquid surface layer which produces the tension effects has a thickness of about six millionths of a millimetre; the water layer enclosed may be a hundred or more times thicker than this. To prevent the elasticity of the film from drawing the cross wire PQ towards BC, a force F must be maintained, acting in the direction of the arrow. If γ be the superficial tension and b the distance apart of the wires BA and CD, then, as there are two surfaces to the film, separated by liquid,

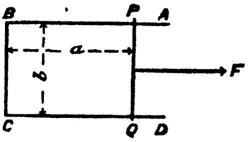

FIG. 7.

$$F=2\gamma b.$$

Capillary Tube Method.—The measurement of free surface energy is somewhat difficult to accomplish with accuracy, although the phenomenon is easily observed and produces effects which are of everyday occurrence. It is most clearly exhibited by the rise of a liquid like water in a capillary tube when one end is immersed in the liquid and the tube is held vertically The capillary rise method is the most simple of all, and the mathematical theory is very easily understood. It is the method which has usually been adopted for measuring the superficial tension of liquids. The degree of accuracy obtainable is limited by (*a*) the narrowness of the tube, (*b*) irregularities in the bore, (*c*) the shortness of the elevated liquid column, (*d*) the difficulty of measuring the mean height of the liquid, and (*e*) the difficulty of securing a clean surface, etc.

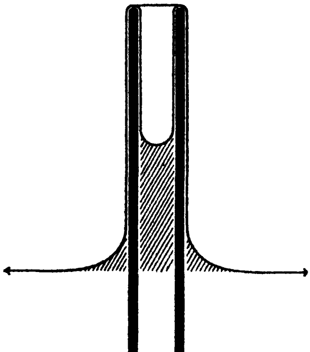
FIG. 8.

Fig. 8 shows the conditions of equilibrium of a liquid which will wet the surface. A film of the liquid is drawn over the whole of the surface of the bore, and by its tension the liquid is drawn up until it just balances the weight of the column. A very simple calculation gives the superficial tension of the liquid. If r_0 be the radius of the bore, ρ the density of the liquid, g the force of gravity, and h the mean height attained in the capillary tube, the vertical force (W) $=2\pi r_0 T$.

This supports a weight of liquid (W)$=\pi r_0^2 h\rho g$.

Consequently, $$2\pi r_0 T=\pi r_0^2 h\rho g$$

and $$T=\frac{r_0 h\rho g}{2}.$$

This method only holds true when the liquid spreads over the solid. W. D. Harkins and F. E. Brown[1] mention the following objections to the method.

---

[1] "The Determination of Surface Tension (Free Surface Energy), and Weight of Falling Drops: The Surface Tension of Water and Benzene by the Capillary Height Method," *Jour. Amer. Chem. Soc.*, xli., No. 4 (1919), p. 499.

(1) It is very difficult to get capillary tubes of uniform bore. (2) Readings of high accuracy are not easily obtained, even with a pair of reading telescopes. (3) The results obtained with some liquids are not consistent, but depend upon the grade of glass forming the tube. (4) Viscous liquids and solutions of certain organic compounds also give incorrect results. However, excellent results are obtained with water, benzene, the lower alcohols, and similar liquids.

There is another method of determining free surface energy—the drop-weight method (see p. 24). This method, although it is free from many of the defects of the capillary method, requires corrections which cannot be made by theoretical means, but the drop-weight apparatus can be calibrated experimentally in the manner adopted by Harkins and Brown. These investigators have determined with great accuracy by the capillary tube method the free surface energy of water and benzene, and, with the aid of the results thus obtained, have shown how corrections can be made which render the results given by the drop-weight method exceedingly accurate in the case of liquids having wide ranges of viscosity, free surface energy, and diverse chemical properties.

In their determination of surface tension by the capillary tube method, Harkins and Brown succeeded in obtaining two pieces of tube, each 20 cm. long, having practically constant diameters throughout. These tubes were washed with sulphuric acid dichromate solution, and rinsed carefully. Then they were steamed by the following method. A glass tube, whose internal diameter was slightly larger than their external diameter, was slightly constricted at one end, and this end inserted through a rubber stopper into a steam can. A capillary tube was inserted in the constricted tube, with the capillary tube resting on the constriction. Conductivity water in the steam can was boiled, and the vapour forced through and around the capillary tube for about an hour. The tests were made in a brass, gold-plated box with optically plane glass sides. Great precautions were taken to ensure the cleanliness of the water in the box and capillary tubes, and a method was provided for elevating and depressing the meniscus when necessary so as to insure a correct head.

Two experimental results at 20° C. with different tubes gave the capillary constant γ for water 72·796 and 72·816 dynes per cm. The average of all the determinations made was 72·8 dynes per cm. The surface tension of benzene determined by the same general method was 28·88 dynes per cm.

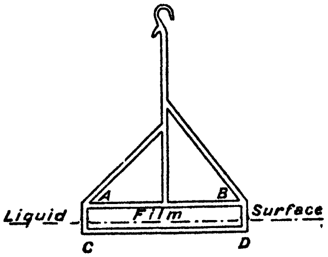

FIG. 9.

Measurement by Film Tension.—A direct method of measuring the strength of the tension has been employed by Proctor Hall[1] at the suggestion of Prof. Michelson.

A glass frame, fig. 9, is suspended from one arm of a delicate balance, so that it is partly immersed in the liquid. The weight is first taken when a film of the liquid is extended between the bar AB and the liquid. The lower bar is completely submerged, and serves merely to stiffen the end portions which dip into the liquid. After breaking the film another reading is made, care being taken that the frame remains immersed in the liquid to exactly the same depth as before. Such a film, in the case of water, consists of two surfaces which have closed together and looped round the bars of the frame. The surface tension is the difference between the two weighings, divided by twice the width of the frame. When *very* exact deter-

---

[1] *Phil. Mag.*, Nov. 1893.

minations are required, a small correction has to be made for the width of the frame, as the film distorts the capillary rise of the liquid on the inside of the vertical bars AC, BD. The amount of this correction is found by taking the tension of the same liquid with two or more frames of the same thickness, but of different widths.

Fig. 10 shows in section the conditions when there is a film in the frame. The tension that may exist on the face separating the liquid from the frame has no effect whatever on the balance, for the surface where the air and the liquid meet encloses the upper bar and closes together to form a film beneath it. This film it is which supports the mass of liquid which is shaded in the figure and which acts upon the balance.

Measurement by Wetted Plate.—The films of some liquids, such as alcohol, ether, and chloroform, break almost immediately they are formed, consequently their superficial tensions cannot be found by the foregoing method. Proctor Hall, therefore, adopted a modification of Wilhelmey's method. The glass or metal frame was replaced by a thin rectangular plate of glass, mica, or metal. The plate was adjusted by trial over a liquid until the whole edge seemed to enter the liquid at once when lowered into it, and when raised slowly parted from the liquid, first at both ends and lastly at the middle of the lower edge.

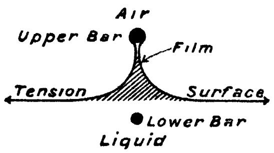

FIG. 10.

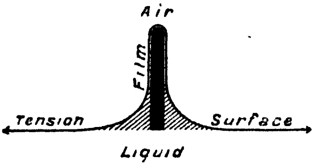

FIG. 11.

Fig. 11 shows in section the conditions obtaining. The tension surface, separating the air and the liquid, rises over the solid and envelops it, and by its contractile force draws up the two shaded masses of water, the weight of which the balance measures. The results are obtained as follows: The index of the balance is brought to zero. The vessel containing the liquid is then slowly raised until the liquid touches the under edge of the plate and wets it. As soon as this takes place, the liquid film spreads over the plate and by its tension acts on the balance. The balance is again adjusted to zero, and the lower edge of the plate is thereby also brought to its original level. Where b is the breadth, τ the thickness of the plate, and T the surface tension,

$$W=2(b+\tau)T.$$

Both these methods have been found to give concordant results and to admit of extremely accurate work with some liquids; but Richardson and Hanson have found them unsatisfactory for mineral lubricating oil, and have obtained better results by the capillary tube method.[1]

Instead of a plate, a vertical tube may be slung from a specific-gravity balance, the vessel containing the liquid resting upon a table which can be raised and lowered by a rack. Making W the weight on the balance, r_1 the inside and r_2 the outside radius of the tube, then

$$W=T(2\pi r_1+2\pi r_2),$$

$$\text{and } T=\frac{W}{2\pi r_1+2\pi r_2}.$$

In other words, the weight divided by the inside circumference plus the outside circumference gives the surface tension.

---

[1] *Jour. Soc. Chem. Ind.*, xxiv. (1905), p. 315.

For a description of this and a number of other methods of measuring superficial tension the paper by Proctor Hall [1] should be consulted.

Drop-Weight Method.—Some of the methods of measuring surface tension described are only suitable for liquids whose films are lasting, whilst other methods give very good results with particular liquids only. In the case of mixtures, such as are used to form soap bubbles, film methods are unsuitable, as some of the constituents are lost by evaporation. The drop-weight method can be used for most liquids of small or medium viscosity, and also for a wide range of substances whose chemical properties render them unsuitable for other methods of examination; but the drop-weight apparatus used must be standardised by means of a liquid whose surface tension has been accurately ascertained by the capillary tube method.

The drop-weight method can also be used for measuring the surface tension between two immiscible liquids. The heavier liquid may be allowed to fall through the lighter liquid, or the lighter liquid may be allowed to rise in the heavier one. Wells and Southcombe [2] used this method to measure the surface tension between oil and water.

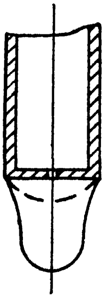

FIG. 12.

When a liquid is allowed to pass through an orifice in the end of a tube with very thick walls, the end of the tube being ground quite flat and circular, a drop slowly forms, and when this drop becomes heavy enough it falls off. Fig. 12 shows the end of a tube about 8 mm. diameter, with a drop of water ready to fall off. The dotted line shows the portion of the drop that remains on the tube end. It is clear that the drop is held in position by the tension of its surface, the linear dimension of which is $2\pi r_0$, the outside circumference of the tube, the force holding the drop in position being $2\pi r_0\gamma$, where γ is the surface tension. When the weight of the drop just exceeds the value of the surface tension stress it falls. However, as already stated, the whole of the liquid does not fall. A small quantity is left adhering to the tube.

The drop which would just balance the strength of a cylindrical film $2\pi r_0\gamma$ is called the ideal drop, whilst the drop which falls, and is caught and weighed, is called the drop. To ascertain the surface tension from the weight of the liquid forming the drop, we must know the weight of the fraction of the drop which does not fall, so as to find the weight of the ideal drop. This can only be done by using a liquid the actual surface tension of which has been ascertained by the capillary tube method. Water and benzene are very suitable liquids for this purpose.

To obtain accurate results a number of points have to be attended to, such as the rate at which the ideal drop grows when on the point of falling, the outside diameter of the circular horizontal surface from which it falls, and the condition of the surface to which the ideal drop adheres before it falls. The temperature must also be under good control, and the end of the tube quite horizontal.

Harkins and Brown [3] have described a method of standardising the drop-weight instrument, or rather of accurately correcting the experimental results it gives. They found that the portion of the ideal drop which falls depends directly upon the radius of the circular face from which it falls and varies inversely as the cube root of the volume V of the drop which falls, *i.e.* it varies as $\frac{r_0}{\sqrt[3]{V}}$.

---

[1] *Phil. Mag.*, Nov. 1893.

[2] "The Theory and Practice of Lubrication: The 'Germ' Process," *Jour. Soc. Chem. Ind.*, xxxiv. (1920), pp. 51T–60T.

[3] *Jour. Amer. Chem. Soc.*, xli. (1919), p. 499.

Table II. contains in the first and third columns the values of $\frac{r_0}{\sqrt[3]{V}}$, whilst the corresponding fractions of the drops which fall, *i.e.* $\psi(r_0/\sqrt[3]{V})$, are given in the second and fourth columns. Knowing the volume of the drop which falls, by calculation from its weight, and the radius of the face from which it falls, the weight of the ideal drop can be ascertained, and from it and the radius of the circular face of the tube end the surface tension is easily calculated, as follows. Let W be the ideal drop and W_1 the drop which falls, then

$$W = 2\pi r_0 \gamma.$$

But as the whole drop does not fall, we must ascertain from the first or third columns of Table II. what proportion W bears to W_1. If $r_0/\sqrt[3]{V}$, in a particular instance, be 0·80, then the ideal drop $= \frac{1 \cdot 0}{0 \cdot 6}$ and $\gamma = \frac{W_1 \times \frac{1}{0 \cdot 6}}{2\pi r_0}$. Tube tips from 5 to 11 mm. in diameter give good results. Small and medium sized drops should take five minutes to form, twelve to fifteen minutes being allowed for large drops. When great care is exercised, the authors say that the results can be relied upon to within one-tenth of one per cent. The paper by Harkins and Brown should be consulted by all who desire to use this method, as very full instructions are given concerning manipulation details.

TABLE II.

1. $r_0/V^{\frac{1}{3}}$.	2. $\psi(r_0/V^{\frac{1}{3}})$.	3. $r_0/V^{\frac{1}{3}}$.	4. $\psi(r/V^{\frac{1}{3}})$.
0·00	1·0000	1·00	0·6098
0·30	0·7256	1·05	0·6179
0·35	0·7011	1·10	0·6280
0·40	0·6828	1·15	0·6407
0·45	0·6669	1·20	0·6535
0·50	0·6515	1·225	0·6555
0·55	0·6362	1·25	0·6521
0·60	0·6250	1·30	0·6401
0·65	0·6171	1·35	0·6230
0·70	0·6093	1·40	0·6033
0·75	0·6032	1·45	0·5847
0·80	0·6000	1·50	0·5673
0·85	0·5992	1·55	0·5511
0·90	0·5998	1·60	0·5352
0·95	0·6034		

Diagram fig. 13 shows how the figures in Table II. are obtained. The abscissæ are the radii of the tips used from which the liquid falls, divided by the cube roots of the volumes of the liquid drops which fall, *i.e.* $\frac{r_0}{\sqrt[3]{V}}$. The ordinates are the proportions the drops which fall bear to the ideal drops.

The Method of Devaux and Langmuir.—Henri Devaux[1] has developed experimental methods for the study of oil films which are remarkable for their beauty and simplicity.

---

[1] References to Devaux's papers are given by Langmuir in his paper, *Jour. Amer. Chem. Soc.*, xxxix. (1917), p. 1860.

A photographic tray (fig. 14) is half-filled with water and a little powdered talc is dusted on to the surface. By blowing gently upon the surface, the talc, together with all accidental contamination, is blown to the further end of the tray. A slip of paper is then bent so as to rest upon the water and slide freely along the sides of the tray, on opposite sides of which it is held by the thumbs. By pushing along this barrier, all the oily contamination is forced into the position C (fig. 14), while the water surface below A is left in a perfectly clean condition.

This clean surface is now lightly dusted with talc. A fine wire is dipped in oil and any visible drop hanging to it is removed. The end of the wire is then touched to the centre of the talc-covered water surface. Immediately, the talc is pushed back from the wire, forming a circular area of apparently clean water. If only a small amount of oil is applied, this disc grows only to a limited size. If oil is similarly applied to another part of the talced surface, another disc will be formed, without causing distortion of the first unless the two discs come into contact. This proves that the surface tension of the oil-covered water within the circles is the same as that of the clean talc-covered water surface.

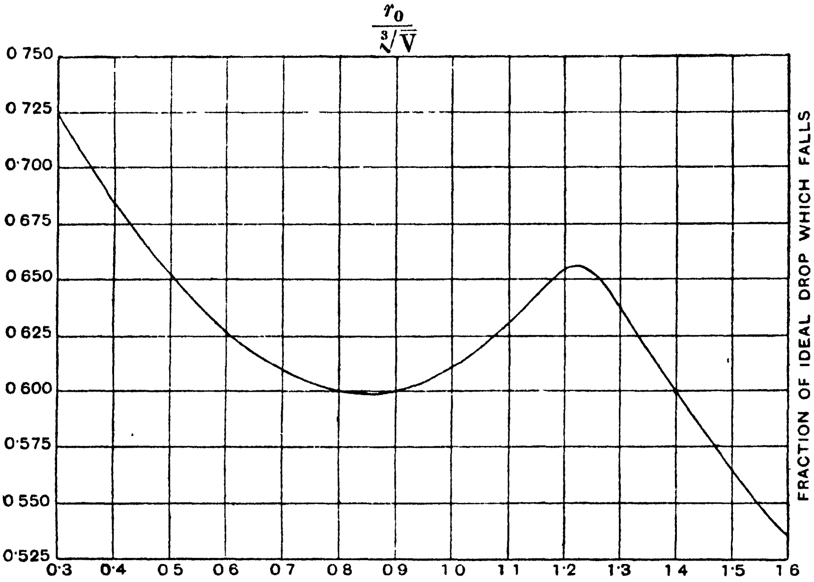

FIG. 13.

Another experiment is still more instructive. Let us clean the surface as before, and then sprinkle talc upon it. By blowing gently upon the water at the point D, *all* the talc is readily pushed up against the barrier A. Now apply a very small amount of oil, and then dust the oil-contaminated surface with talc. By then blowing upon the water at the point D (fig. 14) the talc moves back to the position E, but no farther. The clean area about D is evidently clean water, while the talc-covered area F is covered by an oil film. The oil film thus covers a perfectly definite area without having any effect on the surface tension of the area *which it only partially covers.* To measure the area the oil film covers accurately, it is only necessary to straighten the lower edge E by moving the paper strip B. To accomplish this, blow continuously upon the surface at D, while the strip B is advanced to the position shown in fig. 15. Upon moving the barrier farther, the clear area H suddenly disappears as shown in fig. 16. If the strip is moved still farther, the oil film behaves like an elastic stretched membrane and can be decreased or increased in area at will. But if the lower barrier is pulled back to the position shown in fig. 17, then the oil-covered surface ceases to expand and no longer follows the motion of the barrier.

Devaux has determined the areas covered by monomolecular films from weighed amounts of oils. To do this he prepares a dilute solution (1 : 1000) of the oil in pure benzene and places one or two drops of this solution upon the surface of the water. The benzene evaporates and leaves the oil. Knowing the volume of the oil added in this manner and the area covered by it, the thickness of the film is readily calculated. Devaux's general conclusion is that the characteristic mechanical properties corresponding to certain states of a body, the surface tension of a liquid or the rigidity of a solid, persist almost intact down to molecular thicknesses, disappearing abruptly the minute we go farther.

In carrying out measurements of the areas covered by oil films by Devaux's method, Langmuir[1] was struck by the magnitude of the forces acting on the paper strips. If the strips are not firmly attached to the edges of the tray, they may be pushed out of position when a drop of oleic acid is placed on the water. Langmuir found that a very satisfactory method of measuring the forces was to attach the paper strip to a balance. With the instrument he made, Langmuir carried out an extensive series of measurements of the behaviour of oil films as they were reduced in area.

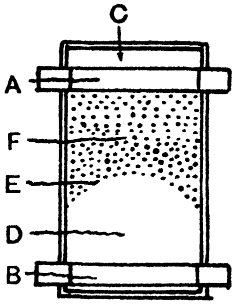

FIG. 14.

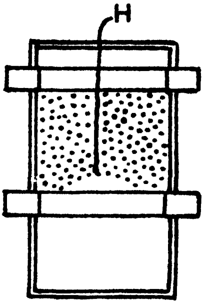

FIG. 15.

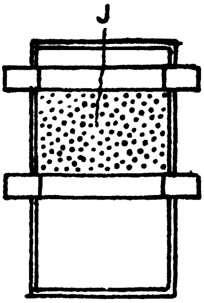

FIG. 16.

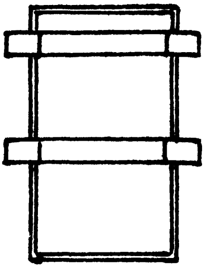

FIG. 17.

More recently, N. K. Adam[2] has made detailed improvements in Langmuir's design, and has confirmed the general correctness of Langmuir's results. Although the credit for the introduction of this method of studying the phenomena of surface tension belongs to Devaux and Langmuir, it will be more convenient to describe the apparatus designed and results obtained by Adam.

The design of the apparatus used by Adam is shown in fig. 18. The water is placed in a brass trough T, 60×14×1·8 cm., the sides being nearly 1 cm. thick and machined and scraped flat on the top. Above the trough is arranged a small balance K, carried by the support S. One end of the beam has a counterweight, while the other has a small knife-edge K from which hangs a small pan P. Two rods, R and R′, extend downwards from the balance to the

---

[1] "The Constitution and Fundamental Properties of Solids and Liquids : II. Liquids," *Jour. Amer. Chem. Soc.*, xxxix. (1917), p. 1869.

[2] *Proc. Roy. Soc.*, A, ci. (1922), p. 454.

float AB. To prevent the passage of the oil film around the ends of the float, two air-blasts H, H′ are directed over the surface of the water between the ends of the float AB and the trough sides T. The blasts are carefully adjusted in position, as in Langmuir's experiments. These air-blasts do not affect the film, except for a very small area near the float, nor is the balance disturbed except for a very slight alteration of zero. The barriers CD, used for confining the film, were strips of window glass about 30×1·5×0·7 cm., which rested on the sides of the trough and projected some distance, so that they could be handled with little risk of grease spreading from the fingers to the water surface. The trough was filled to the brim and carefully levelled. Along the length of the trough, and supported at the end so as not to touch the barriers, was a bar L, with scale to indicate the position of the sliding bar CD with reference to the float AB.

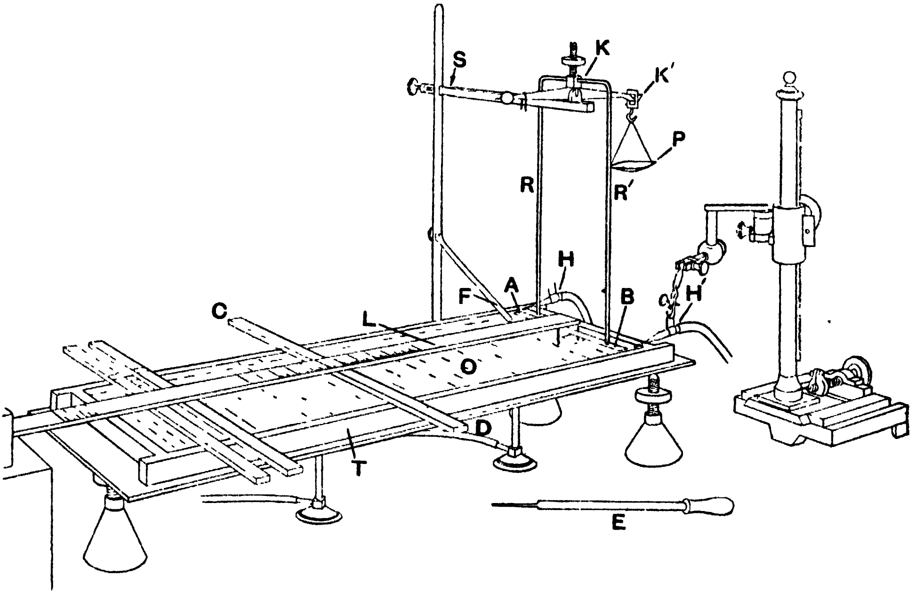

Fig. 18.

Before being used, the trough was cleaned with fine emery cloth until it wetted all over. It was then dried in a warm place, and the top and sides coated with paraffin wax dissolved in benzene. The under-side of the barriers was also coated with wax. The object of the wax was to prevent spreading of the oil film, and it was found quite effective in preventing leaks.

Between the float AB and the nearest end of the trough the air-blasts maintained a clean surface of water, having a surface tension of 72·8 dynes per cm. at 20° C., and when the whole of the trough was covered by such a clean film the surface tension pull was equal on both sides of the float AB, and it was adjusted to the zero on the bar L. When any liquid film which reduced the surface tension on the surface O was used, then the surface tension of the clean water film at the end moved the float AB and raised the pan P. By weighting this pan until the float came to zero, the extent to which the surface tension in O was less than that of clean water could be calculated, and if the force exerted on the float AB by the weight in the pan P (allowances being made for the leverage effects) exceeded 72·8 dynes per cm., then the film on O was suffering a compressive force.

N. K. Adam designedly regarded all the forces exerted by the weights in the pan P as exerting a compression force on the film on O, and for theoretical purposes this must not be lost sight of. The diagrams we have given do not show the "compression sums" figured by Adam, the ordinates having been altered to give surface tensions in accordance with the scheme of expressing surface forces adopted in this chapter. The ordinates given in figs. 1 and 2 are those in Adam's diagrams subtracted from 72·8.

Maximum Bubble Pressure Method.—Simon[1] appears to have been the first to suggest the measurement of surface tension by the determination of the pressure required to liberate bubbles from a vertical capillary tube immersed in a liquid. Freundlich[2] terms it the "method of maximum bubble pressure," and it has been studied and used by many workers since 1851. S. Sugden[3] says: "This method is well adapted for dealing with small amounts of organic substances over a considerable range of temperature. Unfortunately, the results obtained by different observers for many common liquids not only differ among themselves, but are not in agreement with the values found by other methods, for example, the rise in capillary tubes."

Sugden states that now that the surface tensions of water and benzene are accurately known it has been possible to correct certain errors in the earlier methods of calculation and improve the design of the apparatus so as to give correct results. His latest form of "bubbler" is shown in the *Jour. Chem. Soc.*, cxxv. (1924), p. 28. Here two vertical tubes of different diameters have their ends immersed in the liquid the surface tension of which it is desired to know, and by manipulating a stop-cock the maximum pressure required to liberate bubbles from each tube can be measured.

It would be out of place here to attempt to give the calculations required to ascertain the surface tensions from the figures obtained by experiment. The student is referred to Sugden's two papers for this information.

[1] *Ann. Chim. Phys.*, [iii.] (1851), 32, 5.
[2] *Kapillarchemie*, Leipsig, 1909.
[3] *Jour. Chem. Soc.*, cxxi. (1922), p. 858.

CHAPTER III.

FRICTION OF CLEAN, SOLID SURFACES, AND SURFACES COVERED BY ADSORBED FILMS.

Introductory.—The object of mechanism of all kinds is the control or utilisation of energy for the purpose of doing useful work. Owing, however, to the necessary imperfections of our methods, a large part of the energy applied is wasted in various ways; mainly in overcoming the resistance to relative motion offered by the opposing surfaces of the machines themselves.

The least force properly applied to a perfect machine at rest should set it in motion, and, owing to the inertia of its parts, such a machine once set in motion, but not doing work, should continue to move with uniform velocity; but there are causes which operate to arrest motion; firstly, the inertia and frictional resistance of the air; secondly, the friction between the relative moving surfaces of the machine which are in contact; and, thirdly, induced electrical currents. The frictional resistance of the air may be reduced by shaping the moving parts of the machine so as to disturb the air as little as possible; with the electrical resistances we are not here concerned. The most serious resistance of heavy, fixed machinery is the friction between the opposing relatively moving surfaces in contact, and it is in order to reduce this friction to a minimum that lubrication is resorted to.

The statement that we are not here concerned with the electrical resistances is not intended to assert that electric phenomena have no bearing upon lubrication problems; for friction itself is probably largely an electro-magnetic action at the interfaces, the heat of friction being produced by local electric currents. In frictional electrical machines, for example, electric currents are produced by the rubbing of certain substances against each other. Frictional resistances are also altered in their intensities, in some instances, by the passage from surface to surface of electric currents. This action has been made use of for the construction of loud-speakers for wireless and telephone apparatus.

In some cases the frictional resistances between opposing surfaces are utilised as a means of transmitting motion from one portion of a machine to another, or from machine to machine. Friction clutches and belt or rope gearing may be instanced as cases in point. Here the object is to make the frictional resistance as great as possible, so that the opposing surfaces in contact may not slip and waste power. Such devices are, however, beyond the scope of this work, for, although the friction surfaces are often lubricated to a certain extent, the lubricant is applied to prevent the surfaces from seizing, rather than to reduce friction. There are also instances in which lubrication is resorted to chiefly in order to reduce the wear of the friction surfaces, and this may be of such importance that the loss of energy by friction becomes quite a secondary consideration.

The friction between the relatively moving surfaces of machines is of two kinds: (1) when they are clean, and (2) when they are smeared with a soft solid or a liquid. In Chapter II. it has been shown that the film which covers the opposing surfaces is in actual chemical combination with the surface atoms or molecules, and forms upon them a solid, oriented, adsorbed film. However, when there is an excess of liquid or soft solid, the friction is due to the plasticity or viscosity of the thick film forced between the surfaces by their relative movements.

In the present chapter, the frictional resistances between clean surfaces and adsorbed films, and cognate phenomena, will be considered.

In the design of machinery every endeavour is made to so form the rubbing surfaces that, when moving relatively, they shall be separated from each other by as thick a film of the lubricant as possible, the object being to reduce the friction to the lowest possible limits. It is, however, nearly always impossible to form a viscous film under all the actual conditions of running. On this account "oily" lubricants must be used, which give low frictional results when there is no great quantity of liquid present, and the adsorbed films are in contact; for if, then, the friction be high and the velocity of the relative movement great, much heat is developed, the adsorbed films are destroyed and the surfaces in contact heat and seize. The property which lubricants possess of forming adsorbed films which reduce the friction between solid surfaces to which they are applied is known as "oiliness," and is possessed by them in varying degrees.

Adsorbed films are also formed on the surfaces of liquids, and as these films have been the most easily studied, our knowledge of the nature of such films on solids depends almost entirely upon the phenomena presented by them on liquids. This subject has been dealt with in Chapter II.

In the present chapter the friction of clean, solid surfaces and of adsorbed films formed on them will be considered, the friction due to the viscosity of the thicker liquid films being discussed in Chapter V.

The friction which resists the motion of relatively moving surfaces in contact now appears to be of somewhat the same nature as the resistance to shear which exists in solid and liquid substances, whether they be in the crystalline or amorphous condition. Many will have noticed, when skating on thin ice, how flexible the ice sheet is. Indeed it appears rather surprising that such a brittle substance should bend so freely without cracking. This characteristic is due to the fact that an ice crystal has gliding planes at right angles to the optic axis, and ice forming on quiet water freezes with the optic axis in a vertical position. Many other substances, such as graphite, show similar gliding planes. Indeed it is probably safe to say that some substances possess gliding planes of such freedom that they can be regarded as liquid in the direction of such planes. However, very little is known concerning the frictional resistances of such gliding planes. It is even doubtful whether the friction is in any degree affected by pressure or tension applied at right angles to the shear planes, or whether, as in viscous friction, it is only slightly increased by pressure.

Not only does the ice bend freely under the weight of the skater, but the iron of the skate glides very freely over the frozen surface. It is as yet impossible to say in what manner the nature of the friction between the horizontal shear planes of the ice differs in quality from that of the friction of the iron skate upon the ice itself. Adsorbed lubricating films in contact seem in many respects to resemble the shear planes in ice, whilst the ice would seem to act as a substance of marked unctuousness when in contact with iron.

The whole subject of friction is a very difficult one, and we can only call attention to the many interesting facts which experiment has brought to light, and suggest explanations for some of the phenomena met with.

Polished Surfaces.—The surfaces of bearings must be highly polished and quite even if they are to run with the minimum of friction and keep cool. Generally speaking, bearing surfaces are made as true as possible and then polished and burnished. They are then allowed to rub against each other, with a lubricant between them, until they are well bedded and it is safe to run the machine under normal conditions. Such a bearing has a highly polished surface.

Much discussion has taken place concerning the nature of such polished surfaces. Herschel's conception of the structure of a polished surface was, no doubt, similar to the view Amontons held at an earlier date. Herschel[1] wrote: "The process of polishing is in fact, nothing more than grinding down of large asperities into smaller ones by the use of hard, gritty powders, which, whatever degree of mechanical comminution we may give them, are yet vast masses in comparison with the ultimate molecules of matter, and their action can only be considered as an irregular tearing up by the roots of every projection that may occur on the surface. So that, in fact, a surface artificially polished must bear somewhat of the same kind of relation to the surface of a liquid, or a crystal, that a ploughed field does to that of a delicately polished mirror."

The late Lord Rayleigh[2] was of opinion that the difference between a polished surface and the surface of a fluid was not great, the elevations of the former being of molecular dimensions. With the aid of a microscope he followed the changes that occur in the surface in the process of polishing, and he came "to the conclusion that in all probability the operation is a molecular one, and that no coherent fragments are broken out." This view was converted into a practical certainty by Beilby,[3] who traced the process of producing a well-polished surface from its original rough condition to that of the finished surface.

It has generally been considered that polishing consists in the gradual removal of material by the grinding and cutting action of a hard material rubbed over a softer material. Such grinding and cutting produces scratches and grooves, and it might be considered that by using finer and finer grinding material a truly polished surface could eventually be made. However, Beilby has shown that polishing and grinding are distinct processes. By grinding, a flat surface is produced covered with fine scratches, the finer the scratches the better the surface. But such surfaces, if examined by a microscope, show the scratches quite clearly. A polished effect on such a ground surface is produced by rubbing with a soft substance such as leather, thus causing the surface atoms and molecules to flow. When, for example, the surface of speculum metal is polished with a rouged leather, the surface molecules or atoms are displaced and caused to flow. The scratches produced by grinding are thus bridged over by the surface molecules and the scratches eventually hidden, almost if not entirely. Such a flattening of the tops of the asperities, and the bridging over of the furrows, reveals the outlines of the crystalline grains of which the metal is built up. The amorphous condition of the surface molecular layer produced by grinding hides the crystalline structure below, but by polishing, the molecules are rendered mobile and are enabled to take up their proper positions in the crystalline structure below.

That the original scratches are often still there is proved by etching the polished surface with a chemical reagent. A glass surface which has been ground with the finest emery powder and then partially polished with the finest French emery-paper (0000) was finally polished with rouge on a rapidly revolving cloth polisher. A part of the surface was then etched with hydro-

---

[1] *Ency. Metropolitana*: article "Light" (1830), p. 447.

[2] *Proc. Roy. Inst.* (1901), p. 563.

[3] *Aggregation and Flow of Solids* (1921), p. 82.

fluoric acid. The unetched portion remained perfectly smooth and liquid-like, but the etched part revealed the original grooves and pits which had been flowed over during the polishing operation.

The remarkable mobility of the surface molecules whilst polishing is going on is so marked that Beilby likens it to the liquid condition. He split a crystal of Iceland-spar so as to present a fresh, smooth surface which had never been touched or rubbed in any way. A small portion of this surface was etched with hydrofluoric acid for about ten or fifteen seconds. Slight etching resulted from the treatment, but the etched surface, though slightly undulating and irregular, showed no new structure or marking. A fresh cleavage face of the crystal was now firmly stroked a few times in one direction with the point of the forefinger covered with clean, soft wash-leather. Under the microscope the surface remained to all appearances unaltered. A drop of dilute acid was then placed on a part of the stroked surface for ten or fifteen seconds as before. The pit produced by the etching had well-defined edges, and the flat bottom was covered with furrows and ridges running in the direction the finger had taken. Here the wash-leather evidently disturbed and scratched the Iceland-spar for some distance below the surface ; but the flowing surface molecular layer was so mobile that it acted like a varnish. Not only was the surface extremely mobile, but it was able apparently by surface tension forces to stretch quite flat, in a manner similar to that of a liquid surface.

Beilby also studied exceedingly thin metallic films on glass. They ranged in thickness from a few millionths of a millimetre up to several hundred times that amount. When heated to temperatures of from 250° to 400° C., the films formed patterns similar in many respects to oil films on water, although the temperature was in all cases very much below that of the melting-point of the materials used. It is clear that even solid films on solid substances may show surface tension effects, even when the temperature is not sufficient to melt either the film or the solid to which it adheres. The polished surfaces of solids, being as smooth as those of liquids, can be covered by exceedingly thin films of liquid lubricants. Indeed, they may be covered by primary (monomolecular) films just as completely as can water.

Cohesion or Seizing.—A cause of friction must be noticed which is aggravated rather than diminished when surfaces are clean and smooth ; for the cleaner and more perfect they become the greater are the number of points of contact, and when such surfaces are pressed together, and heated somewhat, chemical forces come into play which cause them to adhere more or less strongly. In the case of bearings, when the velocity of rubbing is considerable, they weld together (seize) owing to the heat developed.

A large number of cases have been instanced in which solid surfaces when brought into close contact adhere more or less firmly. Two pieces of plate glass, for instance, carefully cleaned and freed from dust, may, if placed upon one another *and pressed together with a sliding motion*, be caused to adhere so strongly that one may be lifted and even held in a vertical position by means of a handle of sealing-wax attached to the other ; indeed, a skilled workman can render the surfaces so nearly true and clean that when pressed together they cannot again be separated without breaking the glass, the points of contact having become practically *welded.* In like manner, pieces of marble, upon which true surfaces have been worked with great care, adhere when pressed together, and even *in vacuo* their cohesion may be so great that comparatively large masses may remain suspended in virtue of their mutual attractions. Clean, true surfaces of copper adhere when pressed together ; and Barton showed that a dozen small cubes of this metal, whose sides he had made very true, when piled on one another, adhered when the upper one was lifted. Whitworth showed, more recently, that other substances may be caused to exhibit similar attractive forces. Considerable doubt has been thrown upon the suggestion whether most, if not all, of these cases of adhesion are due to the attraction of solid for solid; for H. M. Budgett[1] has proved that when steel gauges, which normally adhere together firmly, are cleaned so as to remove the adsorbed oil film which is always present on their surfaces, they do not adhere at all. Two surfaces of lead scraped quite clean and pressed firmly together in a vice do adhere, but only slightly. When they are pressed together with a screwing motion they adhere more strongly; but in this case the contact surfaces must have had their temperatures raised by the friction. In other words, such surfaces, when rubbed together, heat and "seize." In the cold, the adhesion is very small. Whether surfaces will or will not adhere when pressed together, would appear to depend upon how near to their melting-points their temperature is, as well as upon their chemical constitution.

Spring,[2] for example, has shown that by raising metals to temperatures far below their melting-points, welding can be caused to gradually take place under quite moderate pressures, and that even alloys of dissimilar metals can be formed in this way. The metals experimented upon were turned into cylinders, with ends as perfectly plane as possible, and these were firmly pressed together by means of a screw. After heating for several hours at 200°-400° C., the cylinders of most similar metals became so firmly welded together that, if broken in a vice, the fracture did not take place along the original surface of separation. Dissimilar metals, treated in the same way, became alloyed at the junction. Beilby's experiments on metallic films show that at these temperatures even surface tension forces are sufficiently strong to cause the metal to flow. Accurately finished pieces of glass are now welded together by this means to form hollow prisms, etc., as the surfaces join without distorting the pieces of which they are built up.

When a fresh fracture is formed in a piece of glass at the ordinary temperature of the air, the fracture cannot be healed by pressure, even though the surfaces be an accurate fit and quite clean; but at temperatures above 200° C. they can. One explanation of this that may be considered is that when at ordinary temperatures a fracture is produced, there is a rearrangement of valencies at the surface of the fracture, and that, even when the surfaces are firmly pressed together again, the old bonds will not reform unless they are freed by vibrations becoming more violent owing to rise of temperature.

Evaporation or boiling may be regarded as a process in which the cohesive forces of the molecules of the liquid have been completely overcome, the heat rendered latent being a measure of these forces. This view the late Lord Rayleigh[3] regarded as substantially sound, and he calculated that, on this hypothesis, the cohesive force of water is 25,000 atmospheres. Some reasons have already been adduced in support of the view that the molecules of solids powerfully attract each other when brought into close juxtaposition. This is equally true of the molecules of liquids, which, in spite of their fluidity, require the expenditure of a considerable amount of energy to separate their molecules completely. At sensible distances the attractive forces between molecules are inappreciable, but when the distances separating them become infinitesimal the forces become extremely powerful. It has been computed that such attractions become perceptible when the distances separating the molecules are reduced to 50/1000000 millimetre (Quincke).

Berthelot found that water could sustain a tension of about 50 atmospheres,

---

[1] *Proc. Roy. Soc.*, A., lxxxvi. (1911-12), pp. 25-35.

[2] *Zeit. physikal Chem.*, xv. (1894), p. 65.

[3] *Phil. Mag.*, October 1890, p. 286.

applied directly, and the phenomenon of retarded ebullition, described by Dufour, helps to confirm this view. In a vessel containing a mixture of linseed oil and oil of cloves, the latter observer immersed drops of water, which were still seen to be swimming about after the temperature had been raised to 356° F. The pressure of aqueous vapour is, at this temperature, nearly ten atmospheres, or about 147 lbs. per square inch. Hence, the cohesion of the water must be able to support a tension of at least 132 lbs. per square inch. In these experiments, the water was carefully freed from dissolved air, etc.

W. Spring[1] has shown that the dust of most metals, if subjected to sufficient pressure, may be made to weld into solid blocks. The pressure required is very much greater with a hard metal, such as aluminium, than with a soft metal like lead, but all the metals experimented upon were found to weld at ordinary temperatures, if sufficiently compressed. Of course, the pressures used in these experiments were far greater than are brought to bear upon ordinary bearings: but, as shown above, cohesion commences between very smooth surfaces under very moderate pressures, and the increased friction thus set up rapidly causes the bearings to become heated. This greatly increases the tendency of the surfaces to adhere, and when once they do so locally, the area affected rapidly spreads and the two metallic surfaces seize or abrade each other.

Diffusion of Solids.—The late Sir William C. Roberts-Austen,[2] who published several investigations of the rate of diffusion of metals into each other, wrote in 1897: "The continuation of these experiments has led to the recognition of the remarkable fact that diffusion of metals can readily be measured not only in molten, but in solid metals. It is certainly remarkable that gold placed at the botton of a cylinder of lead 3 inches high, and heated to only 200° C. or 400° F., which is far below its melting-point, and while it is to all appearance solid—will have diffused to the top in notable quantities by the end of three days. . . . The experiments summarised have already led to the recognition of the undoubted fact that it is possible actually to observe and measure the migration of the constituent atoms in a metal or alloy at the ordinary temperature."

G. Hevesy and A. Obrutsheva[3] find that diffusion sometimes depends upon the physical condition of the metal, diffusion taking place more rapidly in the case of substances when in the amorphous condition than when crystalline. However, potassium diffuses with equal rapidity into both amorphous and crystalline lead.

Nature of Friction.—When two solid surfaces are pressed firmly together, they cannot be moved relatively to each other without the exercise of considerable force; and when, by a sufficient effort, the surfaces have commenced sliding against each other, the resistance to be overcome in order to keep them in relative motion, though it may be either greater or less than was required to start them from a state of rest, has at all speeds a considerable retarding effect, and is called the friction between the surfaces. The frictional resistance varies greatly between different surfaces and materials, being generally least between hard and polished, and greatest between soft and rough surfaces. Between leather and coarse sandstone, for example, its value is very considerable, and it is owing to this fact that we are enabled to stand and walk in such perfect security on ordinary ground. Between leather and ice there is very much less friction. Walking on ice is, consequently, less secure than walking on the ground, and progression is more safely and easily effected by skating or sliding.

---

[1] *Bull. Acad. Belg.*, (2), xlix. (1880), p. 323.

[2] *Fourth Report of the Alloys Research Committee*, p. 58.

[3] *Nature*, cxv. (1925), p. 674.

In the rolling of solids against each other, the friction owes its existence almost entirely to the elasticity of the surfaces in contact. A distinction must be drawn between the rolling of the rough surface of a wheel upon a rough road, and the rolling of a smooth ball over a smooth surface in a ball-bearing. In the former case, the wheel and road abrade each other much more, owing to dust, sand, etc., and the friction is mainly due to this, whilst in the latter the ball and surface upon which it runs are well lubricated, and the elasticity of the material results in a small amount of slipping and friction.

Friction between surfaces of unequal hardness results in the more or less rapid abrasion of the softer surface, the harder surface suffering very slightly, unless particles removed from it, or derived from extraneous sources, become embedded in the softer surface and act as graving tools. This is what occurs in the process known to mechanics as "lapping," in which emery or some other very hard substance is pressed into the surface of a soft metal, such as lead, which merely acts as a holder for the cutting material.

Rolling friction is of much the same nature as sliding friction. Upon perfectly rigid plane surfaces the friction of rolling would be *nil*, but, as has just been pointed out, such surfaces cannot be produced, and inequalities remain which interlock and form obstacles to free motion. Moreover, pressure causes more or less deformation, both of the plane surface and of the face of the roller, so that contact takes place, not upon a line or spot, but upon a more or less broad strip or circular area, and as the roller or ball moves along, fresh portions of the surfaces become distorted and some sliding friction occurs. Nevertheless, for the same load, much less resistance is offered to motion by rolling friction than by sliding friction. A block of stone which would require the exertion of great force to push or drag it over the ground, can be moved with comparative ease upon rollers. Vehicles are, for the same reason, provided with wheels; and, of late years, the substitution of rolling for sliding friction has been extensively applied in the roller- and ball-bearings of electro-motors, tram-cars, cycles, churns, clocks, astronomical telescopes, and many other machines and instruments where the pressure upon the surfaces is comparatively light. With this kind of friction, substances such as india-rubber, in the form of wheel tyres, for example, may be used to roll over comparatively rough surfaces without much loss of energy, the elasticity of the one surface enabling it to change its form to suit the inequalities of the other.

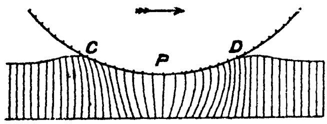

FIG. 19.

In fig. 19 an iron roller is represented moving over a surface of rubber. The rubber is distorted by the weight of the roller, and slides or rubs against it at points near C and D. For some distance on each side of the centre, P, there is little slipping, and this area of slight slip increases with the friction between the surfaces. When both the roller and the surface upon which it rests are distorted, the conditions are similar.

It is conceivable that the use of an unguent for ball- or roller-bearings may add viscous friction outside C and D, and the resistance to rolling may be actually increased. The lubricant, however, in some measure, prevents the wear of the surfaces. In the case of rubber tyres, rolling over rough, uneven ground, such slipping is not large, and the resistance to rolling is correspondingly small.

The laws of rolling friction would appear to be identical with those of sliding friction, with the proviso that the resistance varies inversely as the radius of the rolling body. The law may be expressed as follows:—

$$R=\mu_1\frac{W}{r},$$

where μ_1=the coefficient of friction, W=the load on the roller, r=the radius of the rolling body, and R=the frictional resistance.

The rate of slipping at the contact surfaces is so slow that the coefficient of friction, although it probably decreases as the speed increases, does so very slowly.

Plasticity of Crystals. It was observed by M'Connel[1] that a bar of ice, cut with the optic axis at right angles to its length, may be bent in one direction, and behaves as though it were built up of a number of plates which are capable of sliding over each other. Such an ice bar, when the ends are placed on two supports, with the optic axis in a vertical position, according to O. Mügge,[2] assumes the form shown in fig. 20. When the optic axis was horizontal instead of vertical, and also at right angles to the length of the bar, the ice remained rigid under load. Mügge states that the curvature produced is lasting, and that he did not notice optical strains or cracks. The bar (fig. 20) eventually broke along the dotted line. M'Connel made a number of experiments to ascertain the stresses required to produce such parallel translation, and Mügge, repeating M'Connel's experiments, says that the result was a complete confirmation of his results. R. M. Deeley[3] showed that the experimental results indicated that the parallel translation resembled viscous flow in some of its characteristics. Very small loads indeed caused shear at or near the freezing-point. It must be remembered that large, perfect crystals are difficult to obtain, and any imperfection in the crystalline structure tends to prevent shear where the shearing stresses are small.

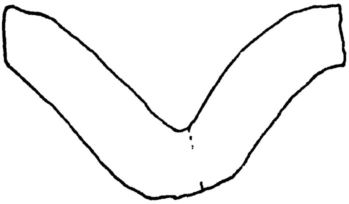

FIG. 20.

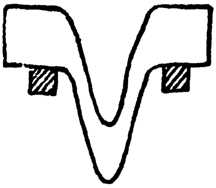

FIG. 21.

The behaviour of an ice-bar cut with the optic axis parallel to its length is shown in fig. 21.[4] Here the bar rests upon two supports and has been weighted in the middle. In this case the planes of parallel translation are at right angles to the length of the bar, and the parts pushed out of position are often striped parallel to the base, but optically they behave exactly like the unsheared ends. When the supports were brought within ½ cm. of each other, by using a piece of string a thin plate of ice could be pushed out altogether.

Referring to the work of M'Connel, Mügge says, if the bar of ice was cut out of a uniform ice crystal the longitudinal direction of which was perpendicular to the optic axis, and placed upon two edges in such a way that the optic axis was perpendicular, and a weight was then placed upon it, the crystal

---

[1] *Proc. Roy. Soc.*, xlviii. (1890), p. 259, and more fully *ibid.*, xlix. (1891), p. 323.
[2] *Neues Jahrbuch für Mineralogie*, etc., Bund II. (1895), p. 215.
[3] *Proc. Roy. Soc.*, A., lxxxi. (1908), p. 255.
[4] O. Mügge, *Neues Jahrbuch für Mineralogie*, etc., Bund II. (1895), p. 219.

behaved as if it consisted of an infinite number of very thin, non-expansible, but perfectly flexible layers, somewhat like paper between the different sheets of which there is a sticky substance, so that the sheets can only with difficulty glide over each other. The layers are at first level and perpendicular to the optic axis, and if they are bent in consequence of gliding, the optic axis still remains at every point perpendicular to the bent surface. If the bar was at first placed on the edges with a horizontal optic axis, no movement took place; but a movement took place with the *same* weight when the bar was inclined by 90°. According to these experiments the ice behaves in a way similar to the triclinic salt $KMnCl_3.2aq$; *e.g.* whilst the ice is being bent, that movement takes place which was first observed in the monoclinic salt $BaBr_2 2aq$, and was called *parallel translation.*

Graphite shears freely in one plane and is a good lubricant, for if bruised it separates into thin plates which are easily broken up, and the resulting particles slide very freely over each other. Oleic acid, which forms the black spot in a soap bubble, behaves in the same way.

At present our knowledge of the laws of friction in such crystalline substances is very meagre, and it is consequently impossible to say in what respects shear in such substances as graphite differs from the shear that takes place between lubricated surfaces. The necessity for further knowledge will be seen when we remember that in many cases the orientation of the molecules of the lubricant which takes place on metallic surfaces is an instance of true crystallisation, and consequently such lubricated surfaces would appear to be separated from each other by soft, crystalline solids.

Friction of Machinery.—Until quite recently, all experiments made on friction have been conducted with ordinary lubricants under ordinary atmospheric conditions. When the lubricating films are thick and the lubrication depends upon the viscosity of the lubricant, even with ordinary lubricants and under ordinary atmospheric conditions, results can be obtained of scientific value. When, however, the films are contamination films, *i.e.* adsorbed films consisting of a mixture of substances derived from the atmosphere, from the substances with which they have been rubbed, or from contact with the hands, no measurements of friction can be made of a really scientific nature. However, in practice lubrication has to be effected under all sorts of atmospheric conditions, and for practical purposes it is the kind of lubrication which occurs under such circumstances that is of the greatest value to the engineer. An engineer would not consider a substance to be a lubricant which gave a coefficient as high as 0·2 or 0·3, yet it has been shown that the coefficient of friction between some clean substances is much higher than this, so it will be seen that a substance which reduces the value of μ to 0·5 really does act as a lubricant when the friction of the clean surfaces is much higher.

It is also true that a substance may give high frictional results between some substances and act as a good lubricant between others. As an example, Sir William Hardy[1] instances water, which acts as—

an antilubricant for glass on wood,
a lubricant ,, ,, ,, ebonite,
a neutral ,, ,, ,, sulphur,
,, ,, ,, ,, glass,
,, ,, ,, ,, steel,
,, ,, steel ,, steel,

It will be advisable, in the first place, to give some of the frictional results which have been obtained under ordinary conditions and with ordinary lubri-

---

[1] *Jour. Chem. Soc.*, cxxvii. (1925), p. 1219.

cants, and then to give the values obtained when films of pure substances are studied.

Adsorbed Films.—On all exposed surfaces adsorbed films exist, due to the condensation of gases and vapours from the atmosphere, contact with the fingers or with any material with which they have been wiped, etc. At one time it was supposed that such contamination films on liquid or solid surfaces adhered very slightly and still retained the physical and chemical characters of the substance in its liquid and soft solid condition. Of late years, however, it has come to be recognised that such films are really in chemical union with the surfaces upon which they rest, the molecules of the lubricant fixing themselves to the atoms or molecules of the solid in a remarkably orderly manner, and their physical properties undergo change.

In the first (1900) edition of this work it was stated on page 5, that "the friction between most so-called 'unlubricated' metallic surfaces, is, therefore, not a case of true friction between pure metals, but between surfaces contaminated by atmospheric agencies, by grease, etc., derived from the material with which the surfaces were wiped, or by chemically formed films, such as oxides, sulphides, etc."; in other words, the surfaces were *lubricated*. And again, p. 37: "The readiness, however, with which solid surfaces become contaminated by many substances, and the difficulty experienced in cleaning them again, is satisfactorily explained by assuming that the surface molecules exert a very considerable attractive force on surrounding matter. Indeed, freshly formed solid surfaces at once attach to themselves from the air an exceedingly thin coating of moisture, which in a few hours is replaced or supplemented by a layer of grease."

Adsorbed films of some substances, when the pressures are considerable and the rate of motion slow, are not easily rubbed off, and the metallic bearing surfaces are unable to come into contact and cause damage to each other. Under all circumstances, therefore, when the heat due to friction can accumulate, adsorbed lubricating films must be interposed between the surfaces; the friction is then very much less than between the clean solid metals.

Although the chemically clean and true surfaces of metals, such as lead, tin, or wrought iron, will not slide in contact under considerable loads without injuring or grinding each other badly, cast-iron surfaces will slide in contact with wrought-iron or steel, even when the surfaces are clean, without serious damage, provided the relative velocities are not too great; indeed, dissimilar metals generally work better upon each other than do similar ones. The foregoing statement may seem to conflict with the results which have been obtained in measuring the frictional resistance between similar metals. In every case, however, with the exception of experiments by Hardy and Doubleday, when tests have been made between "tough" metals, there is reason to suppose that the surfaces were not chemically clean; for, although the experiments are said to have been made both with and without lubricants, in most cases the condition of the unlubricated surfaces has been described as "unctuous," doubtless owing to the presence of an adsorbed contamination film of a lubricating substance. Under moderate pressures, such adsorbed films prevent the actual contact of metal with metal, if the rate of motion be not too high and the action not too prolonged. When the lubricant is present in excess, the adsorbed film, if broken, is rapidly reformed on abraded areas. This must be clearly borne in mind, otherwise early work on solid friction will not appear in its true light. However, so far as is at present known, the laws of solid friction, when the surfaces are not seriously abraded, are the same between contaminated surfaces and clean surfaces, except in the case of small pressures and low speeds.

The following experiment will illustrate the effect of a slight adsorption film upon a metallic surface:—

A smooth file passed over the freshly prepared, filed surface of a metal, will be found to cut well, even when gently pressed against the metal, but if the hand be passed over the metallic surface, the film of grease thereby deposited will so lubricate it that considerably greater pressure on the file is now needed to cause it to cut. If it were not for the presence of such adsorbed films, soft or tough metals, such as tin, wrought iron, brass, etc., would at once seize, if rubbed together, even at low speeds. Even now the bookbinder lubricates his folder by drawing it across the back of his hand or head, there being sufficient grease on the skin or hair to lubricate the tool.

Coefficient of Friction. The relationship borne by the *frictional resistance* to the *load*, or *force* pressing the surfaces together, has been the subject of much speculation and discussion, and although numerous experimental researches have been carried out in the past, such as those of Amontons (1699), Coulomb (1779), Vince (1784), G. Rennie (1828), Morin (1830–34), and others, it is only recently that clear views have been arrived at. From what has been stated concerning the action which solid surfaces in close contact have upon each other, it will be clear that, in the case of solid friction, the nature of the adsorbed film, or the absence of such a film, must necessarily be of supreme importance; for, in all cases where the surfaces are lubricated, the friction is between film and film, not between metal and metal.

Amontons found from his experiments in 1699 that the resistance to relative motion of solid surfaces in contact was independent of the area of contact and proportional to the normal load; but erroneously concluded that it should always be one-third of the total pressure. This law of friction must have been known to builders and architects for very many centuries: for it is a matter of common knowledge, even to uneducated mechanics, that bodies are stable on certain slopes, whatever the weights or surface areas may be. Recent experimental work has proved the correctness of the views of Amontons with regard to the relationship between friction, load, and area; but has shown that the coefficient of static friction varies greatly between different substances. In an unpublished notebook, Leonardo da Vinci[1] recorded how he had measured the force needed to move a rope when coiled closely in a ball and when stretched out to its full length, and found the pull to be the same, although the area of contact was different, and thus clearly anticipated Amontons' results; but Amontons carried out such a careful series of experiments, and so clearly proved the law of the relation of static friction to load and area, that it is only just to name this first law of friction after him. Amontons also concluded that the frictional resistance was due to the interlocking of the asperities of the surfaces in contact. Coulomb undertook in the arsenal at Rochefort a very extensive series of experiments, which he afterwards published in 1781, under the title of "Théorie des Machines simples, en ayant égard au Frottement de leurs Parties, et à la Roideur des Cordages."[2] He confirmed the law of Amontons with regard to the close dependence of the friction upon load, and also took the view that the friction was due to surface asperities.

For most purposes, it is convenient to measure frictional resistance by expressing it as a fraction of the load. The method of obtaining the *coefficient of friction* may be illustrated by reference to the apparatus used by Morin. It consisted of a loaded box or slider resting on a horizontal slide. A cord,

---

[1] See "The Theory of Lubrication," by W. B. Hardy, F.R.S., *Fourth Report on Colloid Chemistry*, p. 185. (Dept. of Scientific and Industrial Research, 1922.)

[2] *Mémoires des Sçavans Étangers*, tomes 163 and 333.

fastened to the slider, passed over a pulley and carried a small, suspended box, which could be loaded with any desired weight. Both slider and slide could, after each set of experiments, be replaced by others of different material. By placing weights in the suspended box (the slider being loaded), force was applied in a direction *parallel* to the sliding surfaces, and when the slider began to move, the weight of the small box and its contents was a measure of the frictional resistance. Sir William Hardy has used this method in his recent experiments in friction. The machine used by G. Rennie in 1828 had a hinged table which could be placed at any desired angle.

In a particular experiment, the weight of the slider being one ton (2240 lbs.), a force of 350 lbs. was required to cause it to move.

Then, $$\frac{350}{2240}-0{\cdot}156=\mu_1 \text{ or } \mu,$$

which is called the *coefficient of friction,*

while $$350 \text{ lbs.}=\mathrm{F}$$

is known as the total frictional resistance, μ being the static and μ_1 the kinetic coefficient.

The coefficient of friction may be defined as that value which, when multiplied by the pressure normal to the surfaces in contact, gives the measure of the frictional resistance to motion.

Making W the weight normal to the surfaces,

$$\frac{\text{Frictional resistance}}{\text{Normal Weight}}=\frac{\mathrm{F}}{\mathrm{W}}=\mu_1 \text{ or } \mu=\text{Coefficient of Friction.}$$

Static and Kinetic Coefficients.—It has been found that the force F required to keep a body in motion differs from that required to move it from a state of rest. Obviously we may have two kinds of friction with adsorbed films, the static and kinetic; but in the case of viscous friction it is always kinetic. Even when two surfaces are prevented from touching by the injection of a liquid under pressure, the liquid, being viscous, offers resistance only when movement occurs, and the resistance is proportional to the rate of shear. In the case of adsorbed films, however, certain substances slide over each other under the very smallest stresses, and in this respect they resemble viscous films. Sir William Hardy has called the friction which is just sufficient to allow motion to take place the *threshold friction.*

As in all quick-moving machines the friction is generally that due to the resistance of the viscous film, the kinetic coefficient (μ_1) is the most important from the view of energy losses, and the term "coefficient of friction" means "coefficient of kinetic friction." However, at low speeds and with heavy loads, the liquid lubricant is largely pressed out, the adsorbed films come together, and the coefficient of static friction is closely approached. In this condition, unless the lubricant be an oily one, the surfaces in contact may be much abraded.

Generally, the static coefficient is very much greater than the kinetic coefficient of friction when the bearings are well lubricated, but this is not always the case, and the kinetic coefficient of friction of very slow motion is usually the same as the static coefficient. When rough or gritty surfaces have remained some time in contact under pressure, the static coefficient is high, and when slip takes place it very rapidly decreases. When a goods train is standing with all the couplings tight, to start the train the engine has to deal with the static coefficient of all the bearings, and when this is the case the engine is unable to set the wagons in motion. The driver, therefore, reverses his engine until a sufficient proportion of the buffers are in contact and the couplings slack; he is then enabled to set the wagons in motion one at a time, and so deal with the static and low-speed friction of the bearings in detail.

Friction and Velocity.—All the earlier experiments on solid friction were made with surfaces which had not been specially prepared for the purpose, and the results were not in good agreement the one with the other. Nor was any particular attention generally paid to the question of the difference between the static and kinetic friction. In nearly all cases, when the lubricant is an adsorbed film, the static coefficient of friction of polished metallic surfaces is sensibly the same as the very low-speed kinetic coefficient; but between oak and oak and other soft materials the kinetic coefficient of friction at even moderate speeds is considerably less than the static coefficient. Jenkin and Ewing [1] state that the change in the friction coefficient between rest and slow motion is not abrupt. In fact it is highly probable that in the case of adsorbed films or polished surfaces, where the static coefficient differs from the kinetic, the latter gradually changes when the velocity becomes exceedingly small, so as to pass without discontinuity into the former.

From a number of experiments made by Kimball [2] it was concluded that although there is no abrupt transition between the static and kinetic coefficients, the friction of motion is not always less than the friction of rest. This is more especially the case when the loads are small or the surfaces are well lubricated. Fig 22 shows how the coefficient of friction varies with increasing speed. Here the friction varies from that of an adsorbed film to that of a thick, viscous film.

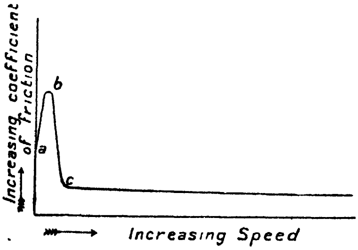

FIG. 22.

When the experimental results obtained by Sir William Hardy and Miss Ida Doubleday come to be considered, it will be seen (p. 66) that when very oily liquids form adsorbed films on very unctuous solids the coefficient of static friction sometimes falls to zero.

With clean, or nearly clean, surfaces, and light loads, Kimball, as we have seen, found that the kinetic coefficient of friction at very low speeds was greater than the static coefficient, but that with increasing speed the coefficient reached a maximum and then decreased. This he illustrated by an experiment in which he measured the friction of a leather belt hung over a cast-iron pulley. To one end of the belt a known force was applied by means of a weight; to the other end a spring dynamometer was attached. The tension at the ends of the belt being known, the coefficient of friction was easily found. In the following table the coefficients are relative only:—

TABLE III.—RELATIVE COEFFICIENTS.

Feet per min.	Relative Coefficients.	Feet per min.	Relative Coefficients.
18	0·82	1190	0·96
92	0·93	1980	0·82
660	1·00	2969	0·69

---

[1] *Phil. Trans.*, **167** (1877), p. 509.

[2] *Amer. Jour. Sci.* (1877), p. 353.

This result is not, however, one which may be given with all substances and lubricants with increase of speed.

Rennie[1] made a number of experiments on the coefficient of friction between certain metals at moderate speeds. From the smallness of the coefficient of friction with light loads it is certain that he experimented with contaminated surfaces. The following table gives some of the results he obtained :—

TABLE IV.—COEFFICIENTS OF FRICTION BETWEEN METAL SURFACES.

	Brass.	Steel	Cast-iron.	Wrought-iron.	Tin.
Brass, ...	·175	·139	·141	·135	...
Steel, ...	·139	·146	·151	·181	...
Cast-iron, . . .	·141	·151	·163	·170	·179
Wrought-iron, . .	·135	·181	·170	·160	·181
Tin, ...	...	...	·179	·181	·265

Brass upon other metals gave the least frictional resistance, and tin upon other metals the highest average resistance. Tin upon tin and brass upon brass both gave high figures. These coefficients are, however, much greater than those given by certain antifriction alloys when working upon iron or steel. R. H. Smith, who submitted the alloy known as "Magnolia metal" to a variety of tests, gave the following figures, the bearing running dry :—

Nominal Pressure lbs. per sq. in.	Speed in feet per min.	Coefficient of Friction μ_1.
99·5	52·3	0·0713
99·5	62·7	0·0663
99·5	78·4	0·0618

Owing to the low friction coefficient of this alloy, a bearing may be run dry at considerable speed without serious injury resulting. The alloy also answers well for bearings which have to carry moderately heavy loads and run at moderate speeds, or which, owing to their positions, can only be supplied with water.

Experiments on the coefficient of friction at very low speeds have been made by Jenkin and Ewing,[2] who measured the friction at such low velocities as 0·0002 feet per second. They employed very considerable loads, and their bearing surfaces were spindles resting upon flat surfaces. These conditions were found by Kimball to favour a coefficient decreasing continuously with increase of speed.

Jenkin and Ewing state that in the case of steel upon brass, lubricated with oil, the coefficient was found to be 0·146 at all speeds from 0·0002 to 0·0064 feet per second. In the case of steel upon steel, however, the coefficient increased from 0 119 at 0·0002 feet per second to 0·13 at 0·0046 feet per second. This increase, and also a subsequent decrease of the coefficient of friction with increasing speed, is much more clearly brought out by Kimball, whose apparatus is thus described :—

"A shaft one inch in diameter was adjusted so that it could be driven at almost any rate between one revolution in two days and a thousand in a minute. A hole was bored through a block of cast iron $3\frac{1}{2}'' \times 3\frac{1}{2}'' \times 1\frac{1}{2}''$ and carefully fitted to the shaft; rigid iron rods were screwed into the top and bottom of this block, and adjusted so as to stand in a vertical line at right angles

---

[1] *Phil. Trans.* (1829), p. 143.

[2] *Phil. Trans.*, 167 (1877), p. 509.

to the shaft. Upon these rods slotted weights could be placed, and thus the pressure upon the shaft and the centre of gravity of the brake could be readily adjusted."

The two following tables give the results obtained :—

TABLE V.

Feet per Minute	Cm. per Second	Relative Values of Friction Coefficient.
·00058	·000295	0·37
·00225	·001144	0·51
·00500	·002540	0·73
·01100	·005590	1·00

These results show a coefficient *increasing* as the velocity increases.

TABLE VI.

Feet per Minute	Cm. per Second.	Relative Values of Friction Coefficient.
6·0	3·05	1·00
22·6	11·49	0·60
50·4	25·61	0·46
110·0	55·90	0·29

These results show a coefficient *decreasing* as the velocity increases.

That the coefficient of friction of lubricated bearings at very low speeds is often greater than the static coefficient is supported by many other facts. Goodman's experiments (Table XXVII., p. 96) may be instanced. On the diagram (fig. 23) the curve A shows the manner in which, in these experiments, the friction varied at moderately low speeds with a load of 150 lbs. per square inch. If the curve A were continued so as to cut the ordinate of no speed, the static coefficient would be about 0·21. This is for bath lubrication. With saturated pad lubrication (curve B) the static coefficient would be about 0·27. These are high figures. It is probable that had Goodman experimented at much lower speeds, he would have found that the friction assumed a maximum at a comparatively low velocity, and then decreased again as the speed decreased. Wellington's results [1] were obtained by noting the resistance offered to the motion of wagons, and cannot be considered as accurate measures of journal friction at very low speeds, as the resistance was due partly to the *rolling* friction of the wheels on the rails, partly to vibration, etc. With lubricated journals it would appear that the coefficient of friction is at a maximum at some speed below one centimetre per second (=about 2 feet per minute). Kimball [2] says that an increase in the pressure between the surfaces in contact changes the value of the maximum coefficient, and makes it correspond to a smaller velocity. The more yielding the materials between which the friction occurs, the higher is the velocity at which the maximum coefficient is found. Heating the bearing changes the position of the maximum coefficient to a higher velocity. In the vicinity of the maximum coefficient, the friction

---

[1] *Trans. Amer. Soc. Civ. Eng.*, **13** (1884), p. 409.

[2] *Amer. Journ. Sci.*, 1876.

generally remains sensibly constant for a considerable range of velocities. With speeds of above one centimetre per second or thereabouts, a viscous lubricant being used, the friction of journals falls rapidly until a velocity of about five

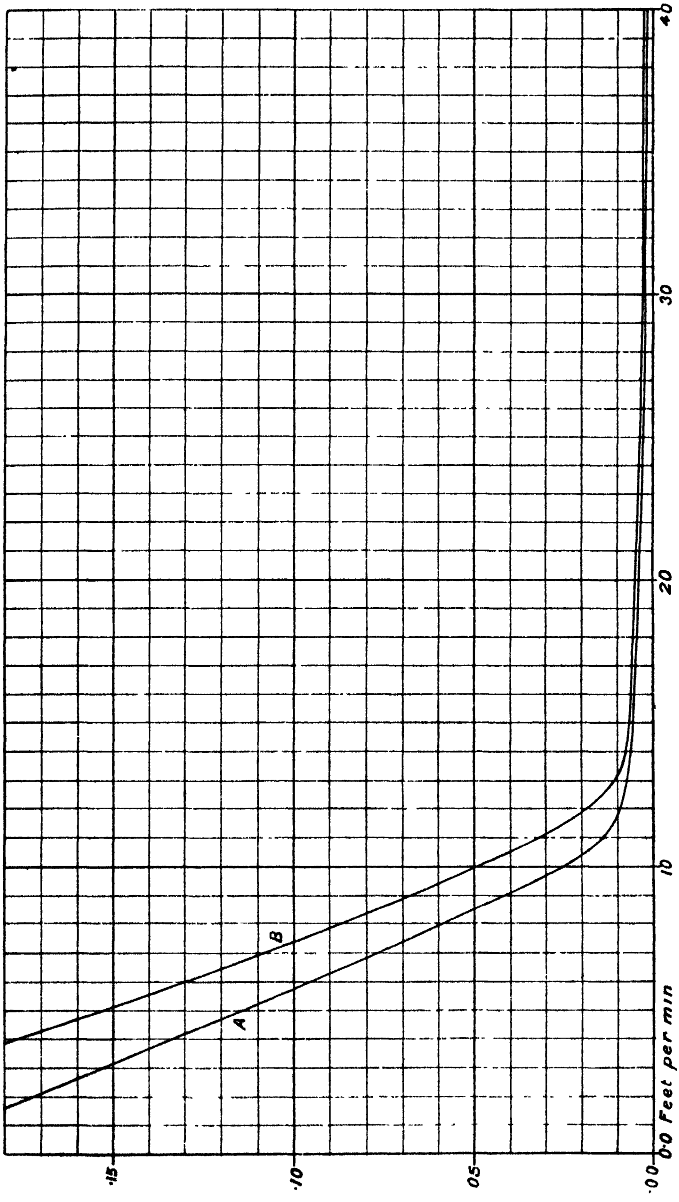

FIG. 23.—Coefficients of Friction.

centimetres per second (=about 10 feet per minute) is reached, and then increases very slowly to the highest speeds at a rate depending upon the method of lubrication employed.

For a number of years greases were almost exclusively used for railway axles. They are generally emulsions of fat or oil, soap and water. Such axle greases are plastic rather than viscous mixtures, and require the exertion of a certain definite pressure to cause them to flow. Owing to this fact, they cannot be completely squeezed out from between the journal and its bearing. They are, on the other hand, readily forced in at the higher velocities. Although offering much more resistance to motion at high speeds than does a lubricant of low viscosity, the much greater oiliness of the plastic film, when the speed is low, makes the static friction less than is given by most, if not by all, truly viscous fluids. On this account, although the friction of a rapidly moving train lubricated by oil may be much less than when plastic greases are used, a much greater force is required to set the coaches in motion. Greases have consequently maintained their position as lubricants for low-speed goods trains on most lines.

T. G. Clayton[1] made a series of experiments to ascertain the friction of coaches belonging to various railway companies with a view to measuring the static friction when using oil and grease, respectively, as lubricants. He found that, on the average, a tractive force of 12·62 lbs. per ton was required to move a coach when lubricated with grease, whilst a force of 18·51 lbs. per ton was required when oil was used. Owing, however, to the greater convenience of oil lubrication methods, grease is now giving place to oil as a lubricant for railway vehicles of all kinds.

To keep the rubbing surfaces of bearings from coming into contact, owing to the expulsion of the lubricant by the load when their relative velocities are small, oils, fats, and greases containing solid lubricants, such as graphite, are much more extensively used than are such solids alone. As a rule, the viscous or plastic matrix acts as a carrier for the solid lubricant, and enables it to be more readily applied to the rubbing surface. It is placed in such a position, with regard to the bearing, that should the liquid lubricant be rubbed out, the heat arising from the increased friction melts the matrix, and the mixture containing the solid in suspension immediately runs on to the dry surface.

Such mixtures are mostly suitable for heavy pressures and low speeds. At high speeds their frictional coefficient is very great, and the heating and loss of power which they cause is proportionately serious. Their use is, therefore, almost entirely restricted to bearings which are only in motion occasionally, or to such as the journals of tip wagons, or the axles and spindles of hauling machinery.[2] The solid portion of the lubricant prevents the metals from heating and welding to each other at points where they are forced into contact by excessive pressure. Solid lubricants are often mixed with liquid ones and used for rubbing surfaces which have not properly worn themselves true, for although the coefficient of friction may be high, and the bearings become heated, the solid lubricant prevents the injury which would otherwise result from the decreased viscosity of the liquid. Thus graphite, soapstone, and paraffin-wax melted together and worked, while hot, into a plaited rope of cotton, jute, or hemp, constitute an excellent packing for piston-rod and other glands. The wax keeps the packing soft and pliable, the soapstone and graphite serve to make it durable, whilst the fibrous material binds the whole together and gives it a form convenient for the user.

When the wheel of a railway vehicle is revolving and rubbing against the brake-block, the contamination films on both surfaces are rubbed away, and the metals come into close contact. Dissimilar metals, therefore, are used—generally cast-iron blocks on hard steel tyres. The clean tyre surface

---

[1] *Lubrication and Traction relating to Railway Carriages* (pamphlet). William Clowes & Sons, 1892.

[2] Further information on the use of grease for locomotive axles is given on pp. 567 and 568.

as it revolves is stationary with regard to the rails, and does not slip. In the following Table VII. will be found the results obtained by Galton and Westinghouse[1] for cast-iron blocks upon steel tyres. The coefficient decreases greatly as the speed increases, and also as the blocks become heated after prolonged contact.

Table VII.—Friction of Brakes.

Average Speed	Co-efficient of Friction between Cast-iron Brake-blocks and Steel Tyres.		
Miles per hour.	1st 3 seconds.	5 to 7 seconds.	12 to 16 seconds.
0	·408 calcd.	·285 calcd.	·237 calcd.
5	·360 exptl.	...	...
10	·320 ,,	·209 exptl.	...
20	·205 ,,	·175 ,,	·128 exptl.
30	·181 ,,	·111 ,,	·098 ,,
40	·134 ,,	·100 ,,	·080 ,,
50	·100 ,,	·070 ,,	·056 ,,
60	·062 ,,	·054 ,,	·048 ,,

Table VIII. gives the coefficients for steel tyres upon steel rails.

Table VIII.—Friction of Wheel on Rail.

Average Speed.	Coefficient of Friction between Steel Wheel Tyres and Steel Rails.
Miles per hour.	From commencement of Experiment to end of 3 Seconds.
0	·141 calculated.
10	·110 experimental.
15	·087 ,,
25	·080 ,,
35	·051 ,,
45	·047 ,,
50	·040 ,,

Between the brake-block and tyre the friction is high, for there is no foreign substance on the surfaces. In the case of the wheel upon the rail the case is different; here, when the brakes have stopped the wheels from revolving, the tyre is slipping over a more or less contaminated rail surface, and the frictional resistance is smaller. The adhesion of wheels to rails yields a very variable coefficient of friction, ranging roughly from 0·3 to 0·1, according to the state of the weather. Taking the coefficient of the rolling friction of the wheel upon the rail to be 0·2 at all speeds, in ordinary weather at 25 miles per hour we may make the weight upon the blocks equal to the weight of the vehicle, but at higher speeds, say 60 miles per hour, about two and a half times this pressure will, at the moment of application, barely skid the wheels.

On the diagram (fig. 24) some of the figures obtained by Galton and Westinghouse have been plotted with the corresponding theoretical static coefficients. The curves drawn through them are logarithmic curves, the rate at which the friction decreases being approximately proportional to the coefficient of friction at each speed. In other words, the slope of the curve at any point

---

[1] *Engineering*, London, xxvi. (23rd August 1878), p. 153.

is proportional to the length of the corresponding ordinate, and if the logs. of the ordinates had been plotted the result would have been straight lines.

This decrease of the friction with increasing speed occurs both with the friction between the wheel and rail and with that between the brake-block and tyre. In the former instance, the contact surface of the tyre is constantly passing over fresh rail, which maintains unaltered the nature of the contamination and keeps the temperature from unduly rising; but between the tyre and the brake-block there is no such constant supply of foreign material, and the

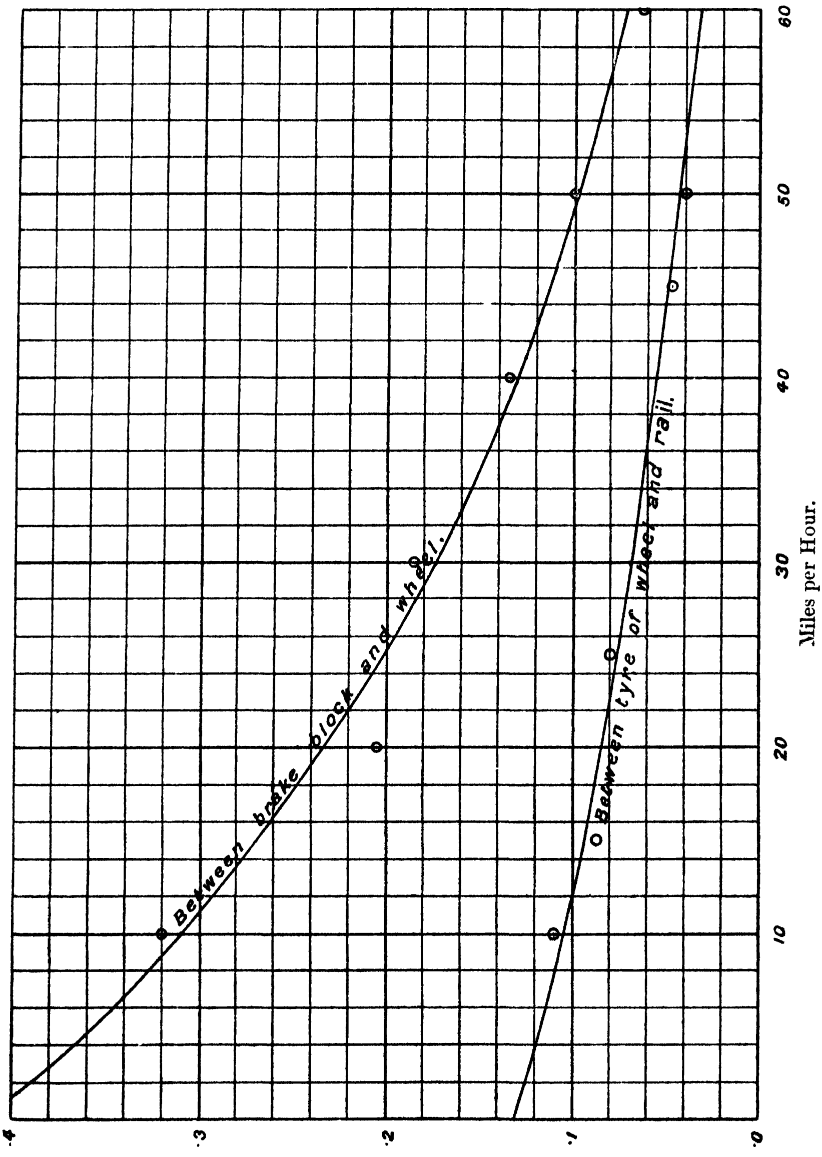

FIG. 24.—Coefficients of Friction.

contact surfaces consequently abrade each other and heat very rapidly. This heating would seem in great measure to be the cause of the decrease of the friction which occurs when the surfaces have been in contact several seconds.

Laws of Solid Friction.—The laws of solid friction as enunciated by Amontons and Coulomb are approximately correct for moderate speeds and ordinary loads, but, as they are not applicable at all speeds and loads, the laws of friction between clean or slightly contaminated surfaces may be more correctly stated as follows:—

1. The frictional resistance is approximately proportional to the load on the rubbing surfaces.
2. The frictional resistance is slightly greater for large areas and small pressures than for small areas and great pressures.
3. The frictional resistance, except at very low speeds, decreases as the velocity increases.

The truth of the first law is easily demonstrated by a machine such as Morin's.

With a slider of cast iron on a slide of the same metal:—

A weight of 56 lbs. requires 8 lbs. to draw it along.
„ 28 „ 4 „
„ 14 „ 2 „

For the coefficient of friction of cast iron upon cast iron we have, therefore,

$$\frac{8}{56}=\frac{4}{28}=\frac{2}{14}=0{\cdot}143=\mu_1.$$

Rennie obtained 0·163 for this coefficient. The value of μ_1 is, therefore, according to these figures, approximately independent of the area of the surfaces and the load, provided abrasion does not take place, but it varies with the condition of such surfaces.

The laws of friction given above for ordinarily contaminated surfaces are somewhat different when pure substances in a clean atmosphere are used.

Cause of Heating.—The energy which is expended in overcoming the frictional resistance of two rubbing surfaces and in keeping them in motion is converted into heat, and raises the temperature of the masses in contact above that of surrounding objects. When the amount of friction is small, the rise of temperature is also small, but should the frictional resistance become large from any cause, the heating of the materials in contact may become so great that the opposing surfaces either become brittle, melt, or even weld together. It is clear that some relationship exists between the work done and the heat produced. The significance of this relationship was first grasped by our countryman, James Prescott Joule, who experimentally demonstrated that a given amount of work, however expended, always produces a fixed quantity of heat. In such cases as the lifting of a weight or the bending of a spring, energy is rendered potential, but this stored energy can likewise produce its proper equivalent of heat.

Before the relationship between work, energy, and heat can be formulated accurately, we must be able to measure both work and heat in some exact manner. The unit of heat used in this country is the quantity which will raise one pound of water, at its maximum density, one degree F. in temperature. When the C.G.S. or metric system is used, it is the quantity of heat which will raise one gramme of water from and at 4° to 5° C. Work, on the other hand, is measured by the product of the average resistance and displacement. Thus, in the case of a sliding surface, if the force required to maintain the surfaces in relative motion be one pound, and the distance travelled be 779 feet[1] in each second of time, then the work done each second is 779 foot-pounds. This amount of work has been proved to be just sufficient to raise one pound of water, when at its maximum density, one degree Fahrenheit in temperature. 779 foot-pounds is called the mechanical equivalent of heat, and the constancy of its value under all conditions has established on a firm basis the law of the conservation of energy. To the engineer this is one of the most important generalisations ever arrived at, as it affords a ready means of answering many problems which would otherwise be difficult to solve.

Making W = the total pressure in lbs. on the rubbing surfaces :—
μ_1 — the coefficient of friction.
v = the speed of rubbing surface in feet per minute.
Then, $W\mu_1$ = the frictional resistance.
$W\mu_1 v$ = the foot-pounds of work done per min.
$\frac{W\mu_1 v}{779}$ = the thermal units generated per min.

We thus see that the heat liberated by any bearing surface is proportional to the friction. In some oil-testing machines the rise of temperature which occurs is measured and is taken as an indication of the resistance to motion which the surfaces offer. The actual rise of temperature depends, of course, not only upon the rate at which heat is liberated, but also upon the conductivity of the heated surfaces. The frictional resistance cannot, therefore, be proportional to the rise of temperature.

Kinetic Friction of Adsorbed Films.—It has already been pointed out that engineers have long known that the resistance to motion of loaded bearings may be greatly reduced by interposing between the rubbing surfaces certain liquids or greases known as lubricants, and that such liquids must possess in a marked degree the property of *oiliness* if they are to be used for machinery. Not all liquids act as good lubricants. Indeed, it has always been necessary to ascertain by actual trial which liquids are suitable. Until the growth of the heavy mineral oil industry, almost all the lubricating oils and fats were either of vegetable or animal origin, and users of machinery had to find by actual trial which particular oil or fat was most suitable as regards price and efficiency for any particular machine ; and having this knowledge the chemist could ascertain whether the proper material was being supplied. But with the enormous growth of industries depending upon machinery for their existence, the demand for lubricants became so great that the supply of vegetable and animal oils was not sufficient to meet all requirements, and mineral oils were pressed into service wherever possible.

It is only recently that the reason why one liquid should be a good lubricant and another not, has been ascertained. Oiliness is due to the fact that the molecules of some fats and liquids, and even of some solids, orient themselves on the bearing surfaces so as to form surfaces which have low coefficients of friction when the films they form come into contact. On this account, the oiliness of a liquid oil, fat, or solid such as graphite, when used for any particular bearing material, may be expressed in terms of its static friction-reducing efficiency, and can be calculated by the following formula :—

$$100-(\mu\times100)=\text{Oiliness.}$$

In no case has F been found to be greater than W, and it must be remembered that the oiliness of each lubricant varies with the unctuousness of the surface it lubricates, for we have seen that water acts as an oily liquid

---

[1] *Phil. Trans.* (1876), p. 155.

when it is used for glass on ebonite, but not when it is used for glass on wood. We must, therefore, assume that the orientation of the molecules of water on ebonite differs greatly from that on wood. This matter will be discussed when the theory of friction is dealt with.

For practical purposes for ascertaining the oiliness of any particular liquid when used with different metals, it is well to find the static or threshold friction. However, a number of interesting experiments have been made at low speeds which may be noticed with advantage, for in these cases the friction was partly solid friction and partly liquid friction.

J. H. Hyde[1] made a number of experiments on the variation in the efficiency of worm-gear with different lubricants, for the Lubricants and Lubrication Inquiry Committee. They were made at high velocities, but the pressures were so great that the surfaces were in contact over considerable areas: indeed the oil used contained, after the trials, small flakes of the metal bearings. They were made on the machine designed by F. W. Lanchester for determining the frictional efficiency of his worm-gear. This machine is described in Chapter X. The results are interesting on account of the very great loads on the bearing surfaces and the high speeds attained; for under the conditions of running, the frictional resistance to the rotative movement of the surfaces consisted of boundary as well as viscous friction.

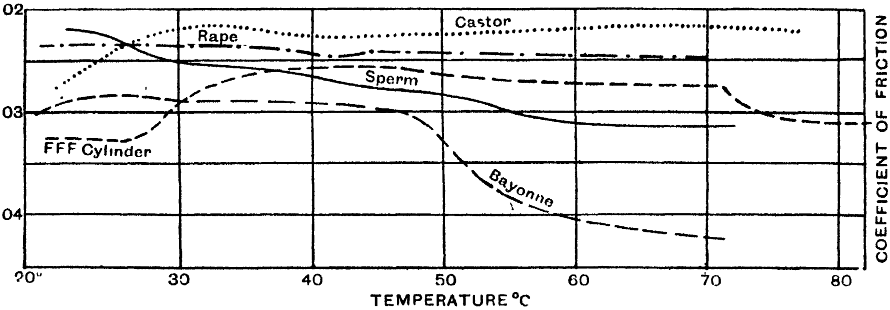

Mean distributed load, 1½ tons per sq. in.
Mean speed of worm-shaft, 1080 revs. per min.

FIG. 25.

The diagram (fig. 25) gives the friction of several oils at a speed of 1080 revs. per minute and a load of 1½ tons per square inch. In each case, as the temperature of the gear-box rose, readings were taken of the friction and temperature, the latter rising steadily during the test. The figure for temperature does not indicate the actual temperature of the oil between the friction surfaces. It is the temperature of the oil in the gear-box.

A viscometer was used for the determination of the viscosity of each oil with rise of temperature, and the results obtained are stated in poises in Tables IX., X., XI., XII., and XIII. The five oils shown on the diagram are castor, rape, sperm, "Bayonne" mineral oil, and F.F.F. mineral cylinder. In the diagram (fig. 25) the abscissæ are temperatures and the ordinates coefficients of friction. It will be noticed that the frictional results do not vary regularly with increasing temperature (decreasing viscosity). The great interest of the experiments is that they conclusively prove that viscosity alone is not the only property which makes an oil a good lubricant.

A study of these curves and others made with the Lanchester machine

---

[1] *Engineering*, 10th June 1921, p. 708.

TABLE IX.—RAPE OIL.

Temperature C.	Viscosity in Poises.	Coefficient of Friction.
20·3	0·890	0·0235
25·7	0·720	0·0235
31·4	0·586	0·0235
36·7	0·490	0·0240
39·1	0·452	0·0240
42·0	0·408	0·0250
44·4	0·372	0·0250
46·8	0·343	0·0250
49·3	0·315	0·0250
52·0	0·384	0·0250
58·8	0·225	0·0245
63·9	0·190	0·0250
69·3	0·160	0·0255
74·1	0·140	0·0260

TABLE X.—CASTOR OIL.

Temperature C.	Viscosity of Poises.	Coefficient of Friction.
21·6	6·64	0·0265
24·7	5·44	0·0245
29·7	4·14	0·0220
32·8	3·47	0·0225
34·8	3·10	0·0210
36·6	2·78	0·0225
39·0	2·38	0·0235
40·5	2·16	0·0225
44·0	1·68	0·0235
45·9	1·46	0·0230
49·3	1·14	0·0225
51·9	0·98	0·0225
54·1	0·88	0·0220
56·9	0·76	0·0220
60·1	0·67	0·0220
61·2	0·64	0·0215
63·7	0·58	0·0215
67·2	0·52	0·0215
70·1	0·45	0·0215
71·6	0·42	0·0220
73·5	0·39	0·0220
76·0	0·35	0·0220

TABLE XI.—SPERM OIL.

Temperature C.	Viscosity in Poises.	Coefficient of Friction.
21·1	0·320	0·0220
24·8	0·279	0·0225
27·2	0·259	0·0245
28·9	0·244	0·0245
30·5	0·231	0·0255
32·6	0·218	0·0260
35·7	0·197	0·0260
38·5	0·182	0·0265
40·3	0·172	0·0265
42·7	0·158	0·0275
45·6	0·143	0·0280
49·2	0·127	0·0280
51·6	0·118	0·0285
53·2	0·109	0·0295
54·9	0·101	0·0300
58·5	0·083	0·0310
61·3	0·072	0·0310
62·3	0·070	0·0315
68·2	0·050	0·0315
71·4	0·042	0·0315

TABLE XII.—"BAYONNE" MINERAL OIL.

Temperature C.	Viscosity in Poises.	Coefficient of Friction.
19·7	1·70	0·0290
24·8	1·14	0·0280
28·5	0·91	0·0290
31·9	0·77	0·0290
35·2	0·67	0·0290
38·7	0·57	0·0290
42·0	0·50	0·0295
45·1	0·43	0·0300
50·3	0·33	0·0335
54·3	0·27	0·0380
56·1	0·26	0·0390
58·1	0·24	0·0390
62·3	0·20	0·0410
65·4	0·18	0·0415
67·4	0·17	0·0415
69·1	0·16	0·0420
70·6	0·15	0·0425

Table XIII.—F.F.F. Mineral Cylinder Oil.

Temperature C.	Viscosity in Poises.	Coefficient of Friction.	Temperature C.	Viscosity in Poises.	Coefficient of Friction.
20·3	19·0	0·0325	60·7	1·22	0·0270
23·2	14·6	0·0325	65·4	1·00	0·0275
26·6	10·3	0·0335	69·2	0·84	0·0275
29·3	8·1	0·0300	71·0	0·80	0·0275
30·6	7·2	0·0280	72·4	0·75	0·0300
33·6	5·8	0·0270	73·8	0·70	0·0295
36·3	4·8	0·0260	75·4	0·67	0·0305
37·1	4·56	0·0260	77·2	0·62	0·0315
40·7	3·63	0·0260	80·0	0·55	0·0305
43·8	3·00	0·0260	82·0	0·51	0·0310
47·4	2·40	0·0260	83·3	0·49	0·0320
51·2	1·92	0·0265	84·5	0·44	0·0315
54·3	1·65	0·0270	86·8	0·42	0·0315

shows that castor oil gave the highest efficiency at the particular value of the load employed. As the temperature rose from 30° C. upwards, the coefficient of friction remained nearly constant at 0·0220, reaching a minimum of 0·0215. A sample of aircraft castor oil gave a still lower minimum of 0·0195. Rape and trotter oils came next to castor oil in order of merit. The coefficient of friction of these oils remained practically constant at 0·025 and 0·024. Sperm oil, although giving a low coefficient at the start, showed a general increase in the friction as the temperature rose, but appeared to have obtained a steady value at about 65° C. The efficiency of the sperm oil as a lubricant at the lower temperatures was as high as that of the best oil used, but fell off as the temperature rose. All the mineral oils tested gave lower average efficiencies than the vegetable and animal oils, and showed the characteristic of a well-marked drop in efficiency when a particular temperature was reached. This was accompanied by the machine suddenly becoming unsteady, owing to the partial failure of the lubrication. Violent oscillation of the gear-box occurred, and readings were very difficult to obtain. This critical temperature remained the same within 1° or 2° when the load was doubled.

The particular interest in these experiments lies in the remarkable difference in behaviour between the mineral oils and the fatty oils. At the pressures used in these tests, the viscosity of castor oil is about six times as great as that of trotter oil at the same temperature, and yet the frictional resistances were very nearly the same. The reduction of friction must, therefore, have been due to some property of the lubricating oil other than viscosity, and the results show that this property is possessed in a greater degree by animal and vegetable oils than by mineral oils.

Static Friction of Adsorbed Films.—In a memorandum communicated to the Lubrication Committee of the Department of Scientific and Industrial Research on 5th December 1918, and reprinted in the *Engineer*,[1] R. M. Deeley showed that when the rubbing surfaces were properly cleaned and the oil to be tested then put on them, static frictional resistances for each oil were obtained which were constant for each oil within experimental errors, but varied with the nature of the friction surfaces, thus proving that the oiliness

---

[1] *Engineer*, 21st January 1921 ; also *Proc. Phys. Soc. Lond.*, xxxii. part ii., 15th February 1920, pp. 18–118.

of each lubricant could be ascertained by measuring the static or threshold friction.

In the early days of the Lubrication Committee's work, attention was called to the property of oiliness as one of the most important for investigation. It appeared that the property of oiliness might show itself most clearly when two metallic lubricated surfaces were in actual contact, and that valuable results might be obtained if the static frictional coefficients of various oils between different metals were measured with a small portable machine which could be worked by hand. Such a machine had been made some time previously and a considerable number of determinations of the static friction had been obtained. The design of the machine depends upon the fact that when two lubricated surfaces are at rest and in close contact, the static friction or force required to cause movement depends upon the relative slipperiness of the surfaces. *The lower the static friction, the greater the oiliness or friction-reducing or wear-reducing value of the lubricant.*

The experiments were made with the above-mentioned machine. Three pegs, each $\frac{5}{32}$ inch in diameter, rested upon the flat surface of a disc of metal which could be slowly rotated. These pegs were secured, concentrically, to an upper disc, which could be weighted as desired, and which actuated a spindle to which a spiral spring and recording finger were attached. When the lower disc was rotated, the pegs were carried with it by the friction until the surfaces slipped, owing to the stress on the spring, and the finger gave the value of the frictional resistance. To damp the oscillations of the finger, the spindle to which the finger and spring were attached was geared to a small train of wheels, the freely revolving end wheel of the series having a weighted rim to increase the inertia. A pawl and ratchet were also attached to the gear to prevent the finger from suddenly falling back when the surfaces commenced to slip. By very slowly moving the driving handle, the finger was soon brought to the position giving the static coefficient. The movable disc upon which the pegs rested lay in a circular dish, which could be filled with oil. It was found that the tendency of the surfaces to slip rapidly when movement started was only troublesome when the surfaces in contact were not quite clean.

The instrument is fully described in Chapter X.

Table XIV. gives frictional tests made with a number of commercial oils, all of which were analytically tested and proved to be genuine samples of their respective kinds. As the vegetable and animal oils contained the small quantities of free fatty acid usually found in commercial samples of these oils, the frictional resistances are slightly lower than would have been given by the perfectly neutral oils (see p. 289).

Table XIV. shows the static coefficient of friction and the efficiencies obtained for a number of oils when tested between mild steel and cast iron, and between mild steel and a lead bronze alloy of the following composition :—

Copper 85·88, tin 5·71, lead 4·00, zinc 4·19, iron 0·10, and nickel 0·12.

The numbers representing efficiency or oiliness were calculated by the formula 100 − (static coefficient × 100) = Efficiency.

Three main facts emerge from a study of the figures in this table. *The first is that the oils in general range themselves in the order in which practical experience would place them as reducers of friction and wear.* In fact, those oils, the static coefficients of which stand lowest in the list, are the oils which, in practice, have proved to be the best lubricants under conditions in which solid friction occurs. Thus rape, olive, trotter, and sperm oils give the lowest friction, and the pure mineral oils the highest. Castor oil gives a value intermediate between the two classes. The next point is that *the static friction* *bears little or no relation to the viscosity*, even among the oils of the same class. The third very important point is that *the surfaces in contact have a great influence upon friction.* Thus there is a marked difference between the friction of most of the oils, according to whether the steel studs were resting upon the cast iron or upon the lead bronze. Rape and olive oils give exactly the same coefficients between steel and cast iron, but very different values between steel and bronze, and the same is nearly true of sperm and trotter oils.

To ensure clean surfaces, or surfaces as clean as possible, the rubbing metals were ground in water with flour of carborundum. They were then polished with fine, wet emery-cloth, rubbed well in water with a cork to remove as much emery as possible, dried with clean blotting-paper, and finally well warmed to get rid of all traces of moisture.

As soon as the surface was clean and dry it was wetted with the lubricant to be tested, well rubbed with a cork to remove carborundum or emery, and then wiped clean with dry blotting-paper. The surfaces were then worked in contact for a time, and the dark streak left on the disc was cleaned off with blotting-paper and oil until every trace of carborundum was removed. The working of the surfaces together in this manner tended to smooth them, and it was found that the more this was done, with the surfaces dry but oily, the more nearly the static and kinetic friction approached each other in value.

TABLE XIV.

Description of Oil.		Mild Steel on Cast Iron.		Mild Steel on Lead Bronze.		Viscosity at 20° C. (approx.) in Poises.
		Static Coefficient.	Efficiency.	Static Coefficient.	Efficiency.	
H.B. clock oil . .	M.	0·271	72·9	0·275	72·5	?
Bayonne oil . .	M.	0·213	78·7	0·234	76·6	1·65
Typewriter oil .	M.	0·211	78·9	0·294	70·6	0·28
Victory-red oil .	M.	0·196	80·5	0·246	75·4	12·2
F.F.F. cylinder oil .	M.	0·193	80·7	0·236	76·4	19·5
Manchester spindle oil	M.	0·183	81·7	0·262	73·8	0·55
Castor oil . .	V.	0·183	84·7	0·159	83·1	7·5
Valvoline cylinder oil	B.	0·143	85·7	..	..	15·0 (?)
Sperm oil . .	A.	0·127	87·3	0·180	81·1	0·33
Trotter oil . .	A.	0·123	87·7	0·152	84·8	0·89
Olive oil . . .	V.	0·119	88·1	0·196	80·4	0·82
Rape oil . . .	V.	0·119	88·1	0·136	85·4	0·9

* A.=animal oil ; V.=vegetable oil ; M.=mineral oil ; B.=blended oil.

Clean surfaces are very sensitive to any contaminating agency. In one instance, such a surface gave a momentary static coefficient of about 0·160. This surface was then breathed upon for about two seconds, and a further test then gave a coefficient of about 0·452.

The effect of the nature of the surface and the degree of contamination upon the friction are clearly shown by the following experiment with this machine. Two roughly polished steel surfaces were caused to slide slowly over each other. The initial static coefficient was 0·154. After slowly rubbing against each other for about ten minutes, the coefficient rose to 0·417. With polished, clean surfaces, Hardy found the static coefficient of steel on steel to be 0·74.

In the memorandum already mentioned it is remarked that " the coefficient of friction given . . . makes it clear that the static friction varies not only with the lubricant, but also with the metals in contact, and that oiliness is rather an effect produced by the lubricant upon the surfaces than a property of the lubricant as a liquid." "The unsaturated molecules of the lubricant seem to attach themselves to the molecules of the metals they wet, and form skins capable of preventing the "free" molecules of opposing surfaces from adhering."

Sir William Hardy, in his experiments which will presently be described, polished his glass friction surfaces, then cleaned them with chromic oxide in sulphuric acid, and rinsed with water. Steel plates were washed with soap and water, and then rubbed with the finger-tips in a stream of water until they wetted all over, rinsing with dry, pure alcohol. Indeed, the surfaces may be cleaned in several ways, but it is imperative that no gritty material even of the finest kind should be on the surfaces or in the lubricant, otherwise the surfaces will alternately stick and slip, causing the recording finger to oscillate irregularly.

J. H. Hyde[1] has made a series of experiments with the Deeley machine at the Nat. Phys. Lab., to ascertain the effects on the static friction produced by mixing free fatty acids with mineral oils. Some tests were also made with the Lanchester worm-gear friction testing machine. The results shown in diagram (fig. 26) were obtained with the Lanchester machine.

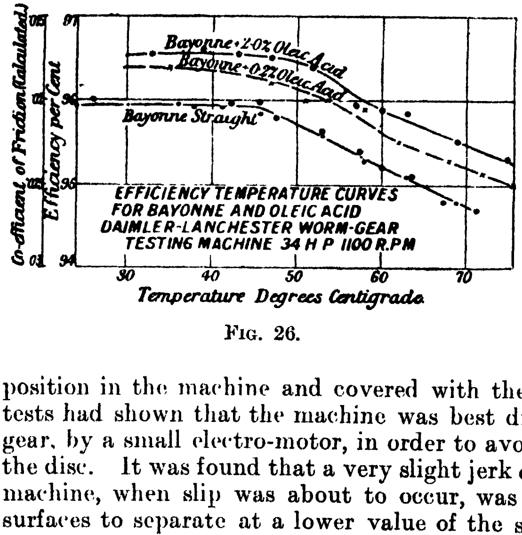

Fig. 26.

The following experimental results are quoted from Mr Hyde's paper:—

Method of Experiment with the Deeley Machine.—Immediately after cleaning and polishing, the surfaces were placed in position in the machine and covered with the oil to be tested. Preliminary tests had shown that the machine was best driven, through a worm-reducing gear, by a small electro-motor, in order to avoid irregularities in the speed of the disc. It was found that a very slight jerk on the handle provided with the machine, when slip was about to occur, was sufficient to cause the friction surfaces to separate at a lower value of the static friction than would have been the case if the handle had been steadily rotated.

When the required load had been applied, the motor was started up and the reading taken when slip occurred. The motor was then stopped, the load increased, and the test resumed. Readings were taken at loads corresponding to intensities of the pressure of 20 lbs., 40 lbs., 60 lbs., 80 lbs., 100 lbs., and 120 lbs. per sq. inch.

The greatest care had to be observed to prevent relative motion between the surfaces when they had rested for a few seconds under load. In the case of mineral oils specially, a slight relative motion under these conditions was sufficient to cause the bronze to seize on to the steel. Frequently, owing to the comparatively large pitch of the ratchet teeth, the spring, when slipping occurred, gave out sufficient energy, before being brought up by the pawl, to cause the carriage to spring back. This usually resulted in partial seizure, necessitating the regrinding of both surfaces, the bronze pegs becoming scratched.

---

[1] *Engineering*, 10th June 1921, p. 708.

It was necessary to relap the disc when this occurred, because the small bronze particles which became stuck on its surface could not be removed in any other way. There is no doubt that very clean, flat surfaces when in contact under load seize together with the greatest ease.

Results of Tests.—The values obtained for the static coefficient of friction (μ) for the various mixtures tested, are plotted in figs. 27 to 30. It will be observed that the frictional coefficient is in most cases constant over the range of loads at which the tests were made. For comparison of the results, the values of μ, at a load of 100 lbs. per sq. inch, have been plotted against the percentage of rape oil in fig. 31, and against the percentage of fatty acid in fig. 32. The temperature throughout the work varied from 17° to 20° C.

The curves of fig. 32 show that a very considerable reduction in the value of the static coefficient of friction of the mineral oil is effected by the addition to it of as little as one-tenth of 1 per cent. of fatty acid, whether added as pure oleic acid, " acid " rape oil, or as rape oil fatty acids.

Of the three methods tried, the addition of the rape oil fatty acids proved the most effective in this respect. On reference to the curve of fig. 32 it will be seen that in the case of the " acid " rape oil mixtures, the value of μ was reduced from 0·132 to 0·11 by adding sufficient rape oil (2 per cent.) to give an acidity of the mixture of 0·05 per cent. only.

Increase in the proportion of rape oil produced further decrease in the coefficient of friction, and the value of μ obtained for the 8 per cent. mixtures (0·2 per cent. acidity) was 0·099, for the 20 per cent. mixture (0·5 per cent. acidity) 0·093, and for the 40 per cent. mixture (1 per cent. acidity) 0·087. The coefficient given by the rape oil alone was 0·081. The addition of pure oleic acid in place of the rape oil gave very similar results, the values of μ obtained for mixtures up to 100 per cent. of oleic acid are plotted in fig. 32.

The results obtained for the addition of the rape oil fatty acids show a greater reduction in the friction than those of the rape oil and oleic acid mixtures. The value of μ is reduced from 0·132 to 0·087 by the addition of only 0·2 per cent. of rape oil fatty acids, but a similar reduction required 40 per cent. of rape oil (acidity of mixture 1 per cent.), 2 per cent. of oleic acid, or 85 per cent. of neutral rape oil. Repeat tests were made on the "straight" Bayonne oil and on the "acid" rape oil at the conclusion of the experiments, and results agreeing within 2 per cent. of the original values were obtained.

The tests on the neutral rape oil mixtures gave considerable trouble. The mixture of oils was thoroughly shaken before being used. If the test was carried out immediately after the application of the oil to the surfaces, a high value of the frictional coefficient was obtained, corresponding approximately to a value proportional to the quantity of rape oil in the mixture.

After a time, however, which appeared to vary with the proportion of rape oil and, also, with the load, the value of μ fell to a much lower value, which remained constant and is plotted in fig. 31. As examples of this effect, the 8 per cent. mixture was tested immediately after the oil was poured into the dish and a value of μ of 0·117 was obtained.

An immediate retest gave the value 0·114; and after twenty minutes the value 0·100 was obtained. The apparatus was then covered up and left for twelve hours, when the value 0·100 was repeated.

Similarly, with the 4 per cent. mixture, the value 0·127 was obtained initially, but after a rest of twelve hours this was reduced to 0·107.

Tests on the Daimler-Lanchester Worm-gear Testing Machine.—In order to compare the results on the Deeley machine with those made on the

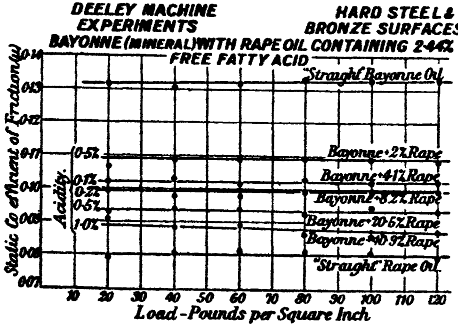

FIG. 27.

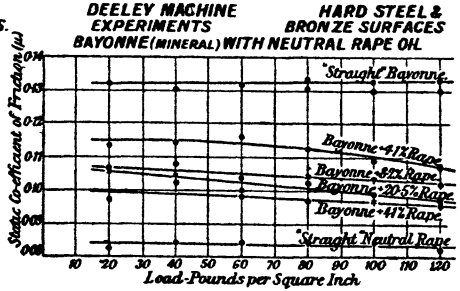

FIG. 28.

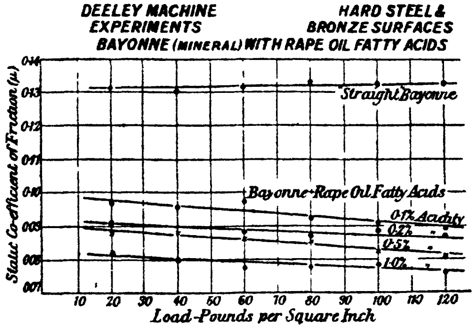

FIG. 29.

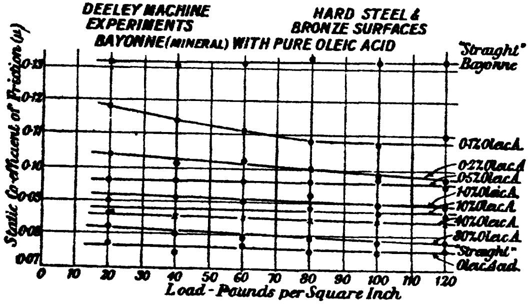

FIG. 30.

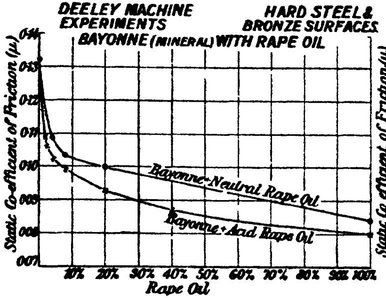

FIG. 31.

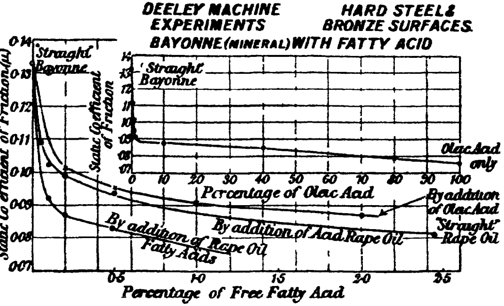

FIG. 32.

Lanchester worm-gear machine, additional tests were made by Mr. Hyde on the latter on mixtures of Bayonne oil with oleic acid. The results of the tests when plotted show the variation in the efficiency and coefficient of friction with the temperature of the lubricant.

The pure mineral oil was first tested and gave an efficiency of the gear of about 96 per cent., corresponding to a coefficient of friction of 0·020. Sufficient oleic acid was then added to make a mixture of 0·2 per cent. acid, and the efficiency was raised to 96·4 per cent., the coefficient of friction being reduced from 0·020 to 0·018. After cooling, more oleic acid was added to bring the mixture to 2 per cent. acidity, and the test repeated, giving an efficiency of 96·6 per cent., corresponding to a further reduction in the frictional coefficient from 0·018 to 0 017. " Straight " rape oil under the same conditions of test gives a practically constant value of the efficiency of 96·7 per cent., coefficient of friction 0·0165.

Sir William Hardy and Miss Ida Doubleday[1] have made a number of experiments on friction, using pure chemical substances as lubricants, and steel, bismuth, glass, and quartz as bearing surfaces. The substances used as lubricants were not in most cases such as would be used as lubricants in engineering practice, but their use has thrown a flood of light upon the action of liquids and soft solids in the reduction of friction between relatively moving surfaces. It was found that to obtain consistent results, the air in contact with the substances used must be freed from impurities such as sulphur compounds, water-vapour, etc. When this was done, surprisingly concordant measurements of static friction were obtained.

The inquiry was limited to the lubricating qualities of normal paraffins and their related acids and alcohols. The molecules of the substances employed, therefore, consist either of a simple chain of carbon atoms to which are attached atoms of hydrogen, or of such a chain loaded at one end with the hydroxyl group—OH, or the carboxyl group—COOH.

The experimental apparatus employed consisted of a sliding piece or slider, which had a spherical face, applied to a plane surface, both surfaces being highly polished. From the middle of the slider a short stem projected, from which a fine thread passed over a light pulley to a light pan for holding weights. The thread was adjusted so that the pull on the slider was parallel to the plane surface.

One of the faces being moved, contact was over an area defined by the weight and elasticity of the material. The extent of this area is unknown, and the normal pressure over it is not uniform. There are, therefore, unknown quantities which make it impossible to express the static friction, determined in this way, in terms of normal pressure. According to Hertz's equation the area of contact varies as the cube root of the weight of the slider divided by its curvature.

Both slider and plate were enclosed in a small chamber through which a current of air was passed, which had been purified by exposure (in order) to sulphuric acid, solid potash, calcium chloride, and phosphorus pentoxide, and finally passed through a column of glass-wool.

Each solid requires its own peculiar treatment to secure cleanliness. A plate of glass used in these experiments is " clean " when its static coefficient of friction is 0·94 ; steel plates when clean gave the value 0·74.

Glass plates were cleaned by first washing with soap and water, rinsing under the tap and allowing to dry by draining. They were then heated for about half an hour in a solution of chromic oxide in sulphuric acid, rinsed

---

[1] *Proc. Roy. Soc.*, A, c. (1922), pp. 550–574; A, ci. (1922), pp. 487–492; A, civ. (1923), pp. 25–38.

thoroughly under the tap and allowed to drain, without handling, clean tongs being used.

Steel plates and sliders were cleaned by washing in soap and water, rubbing

TABLE XV.—PARAFFINS.

Lubricant.	Glass.	Steel.	Bismuth.
n-pentane . .	0·7102	0·4763	. .
n-hexane . .	0·6908	0·4528	0·370
n-heptane . .	0·6751	0·4307	0·346
n-octane . .	0·6552	0·4112	0·320
Undecane . .	0·5903	0·3421	. .
Nonodecane . .	0·4119	0·1785	. .
Tetracosane . .	0·3251	. .	. .

TABLE XVI.—ALCOHOLS.

Lubricant.	Glass	Steel.	Bismuth.
Methyl alcohol .	0·6772	0·4610	0·29
Ethyl ,, .	0·6512	0·4418	0·32
Propyl ,, .	0·6301	0·4173	0·34
Butyl ,, .	0·6061	0·3924	0·30
Amyl ,, .	0·5854	0·3752	0·27
Octyl ,, .	0·5176	0·2981	0·25
Undecylic alcohol .	0·4455	0·2298	. .
Cetyl ,,	0·3253	0·1143	0·17

TABLE XVII.—ACIDS.

Lubricant.	Glass.	Steel.	Bismuth.
Formic acid . .	0·6823	. .	0·45
Acetic ,, . .	0·6003	. .	0·40
Propionic acid .	0·6387	. .	0·31
Butyric ,, .	0·5721	. .	0·28
Valerianic ,, .	0·5259	. .	
Hexoic ,, .	0·4654	0·3108	. .
Heptoic ,, .	0·4051	0·2556	. .
Caprylic ,, .	0·3417	0·2003	0·19
Decoic ,, .	0·2006	0·0741	. .
Dodecoic ,, .	0·0983	. .	. .

vigorously with the finger-tips in a stream of tap-water until water wetted the entire surface, rinsing with perfectly dry, pure alcohol, and allowing to drain in the air.

As the friction is proportional to the weight of the slider, the curved surface of the latter gives the same value for μ as would a flat surface. With such a curved surface the area of contact varies as shown by Hertz's equation. There are, however, advantages to be gained by using a curved surface for the slider. It sinks readily in a viscous oil, and the steady state is more rapidly attained.

In Tables XV., XVI., and XVII. the values of the coefficients of friction are given for a number of substances tested when the surfaces were flooded with the lubricant, when there was merely a wetted surface, and when the film was formed by condensation on the surface whilst in contact with the saturated vapour of the substance. The experiments showed that the friction is independent of the quantity of lubricant present, provided there is enough to cover the surfaces with the invisible film.

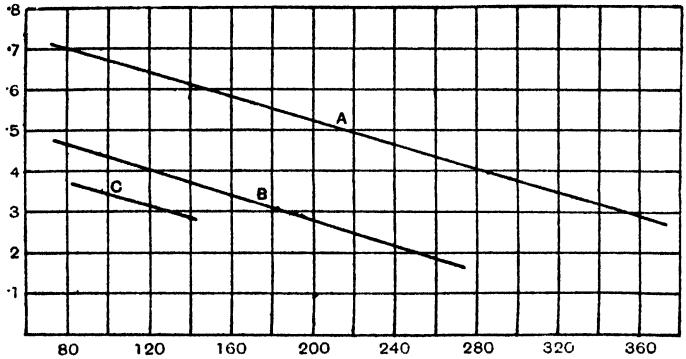

Fig. 33.

When the lubricants were solids the surfaces were covered by either smearing the lubricant over the plate with a glass rod, or by depositing a thin film from a solution in ether.

Table XVIII.

Paraffins.		Alcohols.		Acids.	
n-pentane	C_5H_{12}	Methyl alcohol	$CH_3.OH$	Formic acid	CH_2O_2
n-hexane	C_6H_{14}	Ethyl „	$C_2H_5.OH$	Acetic „	$C_2H_4O_2$
n-heptane	C_7H_{16}	Propyl „	$C_3H_7.OH$	Propionic acid	$C_3H_6O_2$
n-octane	C_8H_{18}	Butyl „	$C_4H_9.OH$	Butyric „	$C_4H_8O_2$
Undecane	$C_{11}H_{24}$	Amyl „	$C_5H_{11}.OH$	Valerianic „	$C_5H_{10}O_2$
Nonodecane	$C_{19}H_{40}$	Octyl „	$C_8H_{17}.OH$	Hexoic „	$C_6H_{12}O_2$
Tetracosane	$C_{24}H_{50}$	Undecylic alcohol	$C_{11}H_{23}OH$	Heptoic „	$C_7H_{14}O_2$
		Cetyl „	$C_{16}H_{33}OH$	Caprylic „	$C_8H_{16}O_2$
				Decoic „	$C_{10}H_{20}O_2$
				Dodecoic „	$C_{12}H_{24}O_2$

Figs. 33, 34, and 35 give the values of the static coefficient of friction as ordinates, and the molecular weights of the lubricants as abscissæ. The curves A, B, and C are for glass, steel, and bismuth bearings respectively.

Table XVIII. shows the chemical formulæ of the lubricants used. They consist of end groups CH_3, $CO.OH$, or $CH_2.OH$, with a carbon chain between. Thus normal pentane has the structure $CH_3.CH_2.CH_2.CH_2.CH_3$; propyl alcohol $CH_3.CH_2.CH_2.OH$; and butyric acid $CH_3.CH_2.CH_2.CO.OH$. The decrease of

friction with increase of atomic weight is due to the addition of the carbon link CH_2 between the end groups, is regular in its nature, and is quite independent of the nature of the solid surface. It is not, however, a fixed property of the carbon in the paraffin chain: for the curves slope differently for acids, alcohols, and paraffins, the slope being determined by the nature of the end group.

Obviously, if the carbon chain CH_2 is long enough there will be no friction, for the curves A, B, and C would cut the zero of friction. Experiment showed that when such was the case, the smallest traction that could be applied produced slow slip.

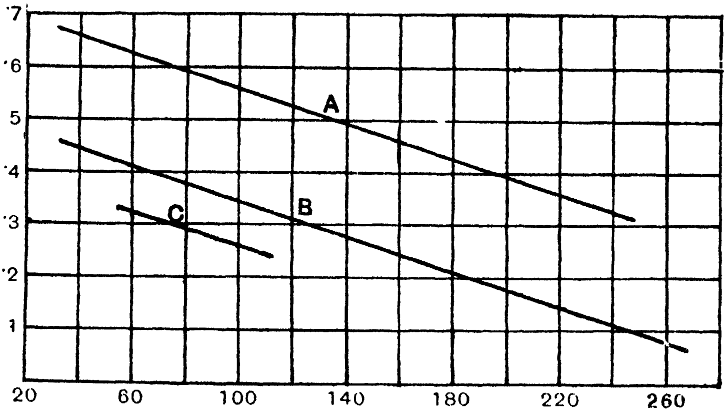

FIG. 34.

Sir William Hardy's[1] views concerning the relationships between the lubricant and solid are as follows. He says: "It will be seen that for each chemical series, and for each solid, the curve is a straight line. The equation is, therefore,

$$\mu=b-aM,$$

where M is molecular and a and b are parameters. The effect of the nature of the solid is unexpectedly simple. In changing from glass to steel the curve for a series is merely moved parallel to itself. and in moving from steel to bismuth there is a further shifting. . . . If two different solids are used, if the slider, for example, is of bronze and the plate of steel, each solid produces its effect independently of the other, so that the equation becomes

$$\mu=\tfrac{1}{2}(b_1+b_2)-aM,$$

where 1 and 2 refer to two solids."

This regularity in the decrease of the coefficient of friction with the paraffins, alcohols, and acids dealt with is due to the fact that they form chemical series of regularly increasing chemical complexity. Table XVIII. shows this clearly.

Hardy[2] remarks: "Now when the curves for a number of solids were compared, a relation was disclosed which was satisfied by the equation

$$\mu=b_0-d-aM,$$

in which b_0 depends only upon the solid, d only on the chemical series, and a is as before. . . . Eliminating aM, which obviously refers to the carbon chain,

---

[1] Hardy and Doubleday, *Proc. Roy. Soc.*, A, c. (1922), p. 561, and Hardy, *Jour. Chem. Soc.*, cxxvii. (1925), p. 1219.

[2] *Jour. Chem. Soc.*, cxxvii. (1925), p. 1222.

the parameter d can refer only to the end groups, so we may write as the final form,

$$\mu = b_0 - d - c(N-2),$$

where μ is the number of carbon atoms.

"This equation is startling in many respects. The parameter b_0 is merely the value of the friction when no lubricant is present.

"Let us assume that this value is some function of the attraction field at the surface of the solid -- indeed, this is the only assumption open to us -- then the equation means that each atom of the lubricant is responsible for a decrement of this field, which is a pure function of its nature and of the configuration. Each atom is, as it were, capable of saturating or neutralising a fixed fraction of the field."

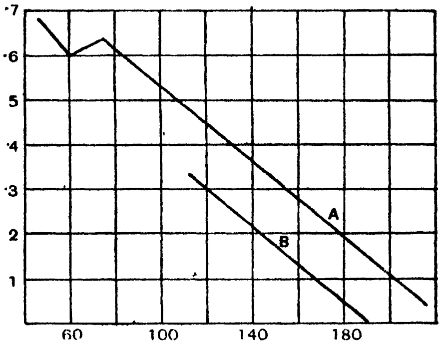

Fig 35.

Some experiments may be described, made by Sir William Hardy and Miss Doubleday,[1] on the result of polishing off as much of the lubricant as possible with fine, perfectly clean linen. The linen was regarded as being clean when the friction of a clean surface was not lowered after being vigorously rubbed with it.

When the lubricant was a fluid, polishing completely removed it from the surface, the friction rising to the "clean" value. It was not found possible to polish off a solid lubricant. Polishing a plate covered with a solid lubricant until nothing was visible under a microscope left a surface which gave a very low value for friction, much lower than the normal friction. An interesting case is that of undecyl alcohol. This substance melts at 11° C.; it was easy, therefore, to apply it either in the fluid or solid states. In the former the alcohol could be completely polished off a surface, whilst in the latter polishing merely served to produce an invisible film having an *abnormally* low friction. Abnormally low values are also obtained when fluid lubricants are polished, but they are transitory. The frictional coefficients for polished solid films on glass are given in Table XIX.

Table XIX.

Lubricant.	Polished Film.	Normal Film.
Undecyl alcohol	0·017	0·4450
Cetyl alcohol	0·019	0·3253
Nonodecane	0·0467	0·4119
Tetracosane	0·0321	0·3251
Decoic acid	0·0632	0·2006
Dodecoic acid	0·0404	0·0983
Myristic ,,	0·0671	Variable.
Palmitic ,,	0·0715	,,
Stearic ,,	0·0318	,,

---

[1] *Proc. Roy. Soc.*, A, c. (1922), p. 560.

No explanation has been given for these peculiar frictional results. However, Beilby has shown that when a metallic surface is polished, the surface molecules are rendered so mobile that surface tension phenomena occur, and the low frictional values given in the table may be due to mobility resulting from polishing.

The area occupied by each molecule of the lubricant must depend upon two factors, viz. the area of the end group of the lubricating molecule and the area of the atom or molecule of the solid upon which it rests, and with which it is in chemical union. In the case of a lubricating film the molecules are packed as closely as the conditions allow, and in this condition the threshold or static frictions are obtained. To ascertain what effect upon the coefficient a greater spacing of the molecules would cause, Hardy[1] admitted to the chamber in which the tests were made, air containing various percentages of ethyl alcohol vapour.

In the diagram (fig. 36) the ordinates are friction coefficients and the abscissæ the number of gram molecules of C_2H_5OH per litre of air. A is the curve for glass and B for steel. The curves are straight lines, save where the vapour pressure is very low, when the results are liable to be upset by that degree of contamination from chance vapour which no amount of care in experimental procedure is likely to get rid of.

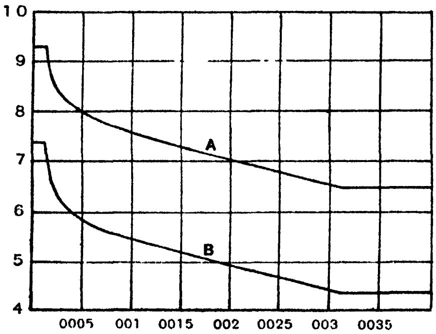

FIG. 36.

The fall in friction, therefore, is proportional to the concentration of chemical molecules of the lubricant in the gas phase—that is to say, each such molecule exerts the same influence as every other. The chances of one molecule sticking to the solid surface will be proportional to the concentration of the gas phase, and therefore we may conclude that each chemical molecule of the film on the solid faces contributes an equal share to the fall in friction. To what extent the different frictional results obtained with the same lubricant on different metals is due to the different spacing of the molecules, rather than to the extension of the field of the solid surface through the molecules of the lubricant, must be left for further consideration and experiment.

The Steady State of Friction. When the lubricant is a very viscous one, it takes some time for the slider to sink through the lubricant and come into contact with the surface below. Between glass surfaces, glycerol, like water, is a neutral substance, the friction having the same value as between clean glass surfaces; but the slider takes some time to sink through the liquid. When glycerol is used as a lubricant for glass, the first readings are vanishingly small. The friction, however, increases with lapse of time, so that in an hour or so it has risen to that of the clean, unlubricated surfaces. It will be seen presently that when a liquid rests upon a solid surface it is very probable that the orientation of the molecules is not confined to those touching the solid surface, but extends into the liquid until the heat vibrations prevent such orientation taking place. Such a layer may delay the sinking of the slider, thus prolonging the time taken before the steady state is reached.

There are other reasons for delay taking place before the steady state is

---

[1] *Proc. Roy. Soc.*, A, c. (1922), p. 556.

reached, depending upon the chemical nature of the lubricants and surfaces. Flat surfaces take much longer to close together than do curved ones. When testing thick oils or greases with the Deeley machine it is well to have the ends of the three studs well rounded, otherwise they will not force their way down to the adsorbed film below.

When a liquid is placed upon a solid surface, or a solid surface is in contact with a vapour, the molecules of the liquid or gas strike the surface and adhere to it for a period of greater or less duration. We owe this conception to Langmuir.[1] He considers that when gas molecules impinge against any solid or liquid surface, they do not in general rebound elastically, but condense on the surface, being held by the field of force of the surface atoms. The length of time that elapses between condensation and evaporation depends upon the chemical properties of the molecules, the stray fields of the surface, and the temperature. According to Langmuir's theory, the adsorbed atoms are chemically combined to the surface atoms of the solid (or liquid), and these in turn are chemically combined to those below them. In the case of fatty acids or alcohols, the carbon chains are loaded at one end with the COOH or OH groups respectively. They may, therefore, be likened to rods loaded at one end. Covering a solid surface with a layer of fluid is like flinging at it a mass of rods with loaded ends arranged at random. Some will hit and stick by these loaded ends, others by the unloaded ends. We may consider that the loaded ends when they strike the surface will remain longer in contact with the surface than do the unloaded ends, and in course of time the rods adhering by these loaded ends will greatly outnumber these sticking by their unloaded ends. The steady state will not be one in which all the rods of the primary film have their loaded ends directed inwards, since in the give-and-take with the overlying fluid some of these condensing are likely to arrive unloaded end foremost. It thus takes some time for the film to reach the steady state in many instances.

TABLE XX.

	First Reading.	Steady Value.	Latent Period.
Caprylic acid .	0·57	0·34	60 minutes.
Heptoic „ .	0·50	0·40	45 „
Cetyl alcohol .	0·59	0·52	15 „

The time taken for the steady state to set in is decreased by mechanical agitation and increase of temperature. Thus Hardy and Doubleday found that when a slider was placed in a pool of caprylic acid the latent period was sixty minutes; but as the slider was moved up and down vigorously it was completed in about ten minutes. A large pool of the lubricant was placed on the plate and the slider put in it at once, with results shown in Table XX.

When a pool of one of these lubricants is placed on a solid, the molecules throughout have at first that random arrangement of the fluid in mass which confers upon it its characteristic viscosity. Orientation begins at once at the solid face and, as the primary film is formed, extends inwards into the overlying fluid until finally a steady state of orientation is reached, maximal at the solid face and decreasing thence as it is more and more upset by the heat motions. The formation of this oriented film, several molecules thick, may have some

---

[1] *Jour. Amer. Chem. Soc.*, xl. (1819), pp. 1361-1403.

bearing upon the following peculiar frictional results obtained by Hardy. A plane slider of steel was placed in a large excess of liquid nonodecane with the following results :—

TABLE XXI.

Initial Load (grms.).	Original μ (steady value).	Weight added (grms.).	μ after adding Weight (steady value).	Latent Period (mins.).
120·4	0·2523	5·0	0·2441	12
420·4	0·2105	5·0	0·2055	5
821·2	0·1871	5·0	0·1857	±1

Although the lubricant may be a liquid, the portion which has become oriented is a soft solid, and requires a definite force to produce shear in it. However, this oriented layer, resting upon the primary film, may be rendered liquid again by mechanical disturbance. A ball or plug put in a lubricated, cylindrical hole 0·0001 inch larger than itself, if allowed to rest, will stick. The fluid lubricant between the faces becomes oriented, forming a soft solid which holds the ball or plug.[1]

Multimolecular films seem to be the direct result of the orienting of the primary film by the solid surface.[2] These oriented molecules or atoms then tend to orient neighbouring molecules or atoms, and so the effect spreads until, in the case of a fluid, it is finally lost in the heat motions. It is not, therefore, necessary to assume that the valency forces which cause the orientation have a range even as great as the molecule or even the atom itself. Still we see that surface forces (stray fields) although of very small range, may produce important results at considerable distances within the liquid mass.

That the oriented molecular layers covering the primary films are really in the soft solid state, these experiments by Hardy clearly show ; for when there is an excess of liquid, the frictional laws are not so simple as they are when hard solids are in contact—μ is not a constant for all pressures.

When the primary films covering surfaces are brought together with sufficient pressure, all the layers except the primary film on the surface are pressed out, and the static friction between the surfaces is then that of the two primary films in contact. Commencing with light loads, as the slider is weighted, more and more of the oriented material is pressed out ; but, strange to say, the coefficient of friction decreases as the film thins.

With adsorbed films, and such chemical series as are given in Tables XV., XVI., and XVII., the static friction decreases as the hydrocarbon chains lengthen. Obviously, if they be long enough, the friction will fall to zero. The acids, for example, will give frictionless adsorbed layers on unctuous solids if the molecular weight much exceeds 220.

Hardy states that he and Miss Doubleday[3] in their experiments actually observed this to the extent " that the smallest traction we could apply produced slip." Whether the rate of slip was proportional to the force they do not state. Here the laws of solid friction would appear to change into those of viscous friction in some respects.

In the case of all the coefficients given in Tables XV., XVI., and XVII.

[1] A. A. Griffith, *Phil. Trans.*, A, ccxxi. (1920), p. 196.
[2] Langmuir, *Jour. Amer. Chem. Soc.*, xxxix. (1917), p. 1905.
[3] *Jour. Chem. Soc.*, cxxvii. (1925), p. 1222.

the loads appear to have been sufficiently heavy to ensure that the films resting on each other were monomolecular; but with lighter loads thicker films separate the solids. Fig. 37 exhibits the effect of varying pressure upon μ. Over the first part of the curve AB the friction is falling. Over this part there is the latent period characteristic of variations in the depth of the layer of lubricant owing to the slider rising or falling in the liquid. We have, therefore, the curious fact that the efficiency of a lubricant increases as the layer thins until it reaches a maximum at B. At B, over the horizontal part, there is no latent period of the kind mentioned. Amontons' law, therefore, holds over BCDE, but not over AB.

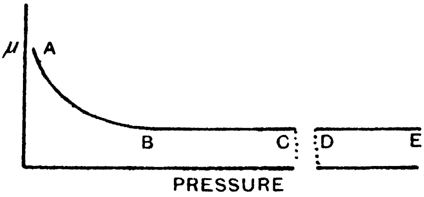

FIG. 37.

Over the region AB it would appear that the layer of lubricant is many molecules thick, and that in this region the adjustment of friction to the load is effected by an actual flowing in and out of lubricant from between the surfaces of slider and plate, whilst over the region BCDE this process ceases. It is well known that during the growth of a crystal, foreign matter is excluded to a large extent, and it may be that the slider, if of light weight, is unable to wholly displace the oriented film.

When the slider and plate are bathed in the saturated vapour of the substance, and then brought together, the latent period is small. Thus in Table XXII. it will be seen that the steady value is reached in five minutes.

TABLE XXII.

	First Reading.	Steady Value.	Latent Period.
Caprylic acid .	0·45	0·34	5 minutes.
Heptoic „ .	0·48	0·40	5 „
Cetyl alcohol .	0·54	0·52	5 „

This would appear to show that the lubricating film is of the same nature whether it is in contact with its saturated vapour or its liquid.

The effect of temperature on the latent period is illustrated by the figures in Table XXIII. which gives the time required to reach the steady state after the slider has been placed in a pool of liquid on the plate. It may be remarked that a small drop of the liquid does not always give a reliable figure, for small drops do not always slide freely over the surface of the plate.

TABLE XXIII.—HEPTOIC ACID ON GLASS.

Temperature.	First Value.	Steady State.	Latent Period.
15° C.	0·50	0·405	45 minutes.
48° C.	0·46	0·405	15 „
72° C.	0·44	0·405	5 „

The value μ in the steady state is independent of temperature, but it would seem that the degree of orientation of the film, when still in contact with fluid or vapour, does vary with the temperature. The friction was measured as soon as possible after the surfaces were brought into position.

Although water is an indifferent substance on glass, *i.e.* its presence does not alter the value of the static coefficient, when mixed with other substances it alters the latent period very considerably and very peculiarly.

TABLE XXIV.

Percentage of Water in Lactic Acid.	Initial Value of μ	Final Value of μ.	Latent Period in Minutes.
100·00	about 0·8	0·92	0
99·59	,, ,,	0·67	5
74·40	,, ,,	0·62	20
21·40	,, ,,	0·57	30
1·70	,, ,,	0·56	45
0·00	,, ,,	0·55	60

In Table XXIV. we here get the unexpected result that the *greater* the number of water molecules present the *shorter* the latent period.

The theoretical interest of the latent period lies in the proof it seems to furnish that orientation tends to extend from any interface on both sides to infinity, but that its sensible extension is fixed by the heat motions which tend to upset it. This point will be noticed further in the section on the Theory of Static Friction.

Hardy summarises the facts as follows:—

1. When the lubricant is composed of molecules whose structure is a chain of carbon atoms loaded at one end by a carboxyl or hydroxyl group, some time elapses after its application to the solid surface before the friction reaches a steady state. This interval is called the latent period.
2. That the latent period seems to be the time required to attain that degree of orientation of the molecules in the primary film possible under the particular circumstances. When, therefore, the lubricant is a normal paraffin in which both ends of the chain of carbon atoms are alike, there is no latent period.
3. The latent period is shortened by rise of temperature, by mechanical agitation, and by dilution with a substance such as normal paraffin, which itself does not manifest a latent period.

Friction with Two Lubricants.—When two lubricants which are immiscible are used, they may be deposited on the surfaces as two films, one upon the other. Water will not wet a freshly exposed surface of solid paraffin, yet water-vapour will condense on to the surface to form an invisible primary film and lower the friction. A plate and slider were covered with solid paraffin $C_{24}H_{50}$, with the following frictional results:—

In dry air	$\mu=0·060$
Water-vapour admitted	$\mu=0·025$

Here the paraffin films were covered by water films, so that there were four films between slider and plate. However, the arrangement is unstable and is readily broken up by mechanical agitation.

Water here acts as a lubricant, as it does in the case of ebonite.

When the lubricant is miscible with water and present on the surfaces only as an insensible film, the admission of water-vapour to the chamber always raises the friction, and mechanical agitation by moving the slider about does not contribute to the effect. When the surfaces are of glass the results in Table XXV. were obtained.

Flooding the surfaces with water again raises the friction.

The action of water on lubricants, though of great theoretical interest, is not of much practical value, for in a bearing there is always great mechanical agitation, and as lubricants have to be used under all atmospheric conditions, only those lubricants are of value which are not seriously injured by water-vapour, etc.

Temperature and Friction.—The temperature of the lubricant and surfaces does not appreciably affect the value of the static friction within the range of atmospheric variations. However, this is not the case when there is a change from liquid to solid or *vice versa* as the temperature is raised. We have already seen that a rise of temperature shortens the latent period.

Theory of Static Friction.—Although much has been learned of late years concerning the manner in which friction varies with the nature of the surfaces, the character of the lubricant, and the pressure between the surfaces, it cannot be said that any suggested theory accounts for all the facts. In these circumstances it is impossible to do more than give an outline of the hypotheses suggested. Any attempt at a full discussion would be out of place, and students are recommended to consult the papers on friction which have been referred to.

Table XXV.

Pure Lubricant.		Water-vapour admitted.
Lactic acid . . .	$\mu=0{\cdot}49$	$\mu=0{\cdot}56$
Ethylene glycol . .	$\mu=0{\cdot}506$	$\mu=0{\cdot}53$
Triacetin . . .	$\mu=0{\cdot}35$	$\mu=0{\cdot}72$

The hypotheses may be divided into two groups. In one the friction is attributed to the adhesion of the surfaces, and in the other to the elastic interaction of asperities.

The friction met with in solids—their resistance to shear—is no doubt due to the adhesion of atom to atom and molecule to molecule. Here the force required to produce shear is proportional to the area. In the case of soft solids, as one bond is broken by shear another bond is made; but in brittle substances, the bonds do not reunite and the solid breaks. Even in the case of brittle solids, under great pressures, plastic flow occurs.

Crystals often shear easily along one or more planes only. Iceland spar, for instance, may be twinned by pressure with a knife. In such cases the ease with which shear is produced must be attributed to the cohesion of the atoms. In some instances, such as ice, movement may be caused along such planes by very small forces indeed. In the case of water and other liquids, the freedom to shear must be attributed to the making and breaking of bonds under stresses by heat vibrations or other causes, and the remaking of others.

A surface produced by fracture must be similar to one that has been worked true by a file, and two such surfaces will not adhere until the temperature is sufficiently high to free the valency bonds and enable the atoms on each side *of the discontinuity to unite. At ordinary temperatures two comparativcly rough, contaminated steel surfaces, pressed against each other, may give a* static coefficient as low as 0·15, but if they are slowly rubbed together the coefficient rises very considerably, owing to the smoothing of the surfaces and the destruction of the adsorbed film. Well-polished, clean surfaces give a coefficient as high as 0·74. If, however, such steel surfaces be rubbed together at a high speed they will seize, and the friction will increase enormously. In the case of shear in a solid, the great force required to produce distortion is no doubt due to the adhesion of the atoms; but it may be asked if the shear between polished surfaces is due to the small attraction of the atoms across the interface, for the two surfaces can be parted without effort. The atoms do not seem to get sufficiently near each other to adhere. There may, of course, be a film of condensed matter on the solid surface which lubricates.

Many liquids and soft solids no doubt form adsorbed films on the surfaces of solids, to which they are chemically bound. Their most active side is attached to the solid and their least active side is outwards. This is due to the orientation of the molecules in the film. We thus have a film on the solid, the exposed surface of which is very inactive chemically, and the friction of which against a similar film is very small. The less chemically active the surface is, the lower it would seem is the friction.

A solid layer cannot be considered as being chemically active all over its surface. Its stray field-bonds are located at points over the surface, the distance apart of these points depending upon the dimensions of the molecules or atoms of the solid. On this account, the nature of the surface will decide how many molecules can adhere to it per sq. cm. It has been proved that the closer the molecules are packed on the surface the lower the friction. This may account for the greater friction of glass than bismuth when they are covered by adsorbed films of the same lubricant.

The difficulty in accepting the cohesion theory of friction is that the friction is proportional to the load, and we should have to assume that as the load decreases the cohesion decreases. This appears to be a real difficulty, if cohesion is chemical in its nature. We appear to have three causes of friction: (1) In a solid, the cohesion of the atoms must be broken before movement can take place, and the friction is proportional to the area sheared. (2) In the liquid, atomic and molecular bonds are being constantly broken by heat motions or other causes, and the friction (or stress) is proportional to the strain the unbroken bonds are subjected to. (3) Between solid surfaces the friction is proportional to the load and independent of the area.

Hele Shaw[1] has attempted to account for the laws of solid friction in the following manner. Supposing the surfaces to be smooth and worn to their normal condition, there are even then only a certain very limited number of points in contact, and further wear merely removes groups of particles, leaving other hollows, or, if no wear is taking place, merely displaces the projecting particles. Any increase of pressure brings a larger number of particles into contact, and so increases, to a proportional extent, the friction or amount of rubbing and consequent heat produced. Hence the friction varies with the pressure.

The following hypothesis for the explanation of the frictional results attained with the normal paraffins, their associated alcohols and acids, and commercial lubricating oils has been suggested by Deeley.[2]

In the case of hydrocarbon oils, we must regard the ends of the chains of the molecules forming the adsorbed films as the asperities which give rise

---

[1] *Cantor Lectures on Friction*, 1886, p. 13.

[2] *The Engineer*, 8th December 1922, p. 611.

to friction. They are, no doubt, elastic, and have to be forced over or between each other's ends to allow of motion taking place. They accomplish this by compressing and bending each other as they move relatively, each chain end springing back into position as it is released, and its potential energy is converted into heat. As the displacement of the chains is purely elastic, the resistance is proportional to the average load on the temporarily displaced asperities. The action is thus a purely mechanical one, the dependence of the friction on load being of the same nature with the asperities of molecular dimensions in adsorbed films as with the very coarse asperities on rough boards or other surfaces. The actual value of the coefficient of friction, however, depends upon the form and stiffness of the asperities in each instance, and this may be dependent upon the heads as well as upon the carbon chains of the molecules. When actual sliding takes place abrasion often results, and particles are torn out which act as ball-bearings, more or less, and convert part of the friction into rolling friction. It thus often results that the coefficient of friction varies with changes of speed and time of rubbing.

Hardy and Doubleday's experiments show that the curves connecting static friction with molecular weight cut the base line; that is to say, above a molecular weight, which is different for each chemical series, static friction should vanish. Very careful experiments showed that, in the case of certain substances of such large molecular weight that theoretically, according to Hardy, the friction should have disappeared, with the smallest tractive forces he could apply the slider slowly moved, the observed rate being of the order of 0·4 mm. per hour. However, a movement of this nature need not be peculiar to substances whose molecular weights are so large that their "theoretical" static fractions should be *nil*. It may be a condition of shear, *similar* to viscous flow, resulting from vibration of the ends of the hydrocarbon chains. Such chains must be vibrating more or less violently, like the cilia covering certain living organs. The amplitude of the vibration of short chains would be small, and they would not change their relative positions unless the strains due to the tangential force were large. With long chains, on the other hand, the amplitude would be large, and small forces tangentially applied would result in slow slip. To produce moderately rapid slip—about 1 foot per minute—considerable force is required, and it is this force whose amount should be regarded as giving the practically useful static friction.

CHAPTER IV.

INTERNAL FRICTION OR VISCOSITY OF LIQUIDS. PLASTIC FRICTION.

Introductory. Before mineral oils were introduced as lubricants, engineers had little reason to study the theory of viscosity, or to specify the particular fluidity of the oils they wished to make use of, for the number of animal and vegetable oils available for lubrication is limited, and the degree of viscosity they exhibit does not vary much in different samples, a little experience being usually sufficient to determine the most suitable description of oil for the purpose in view. But since the introduction of mineral lubricating oils, which can be prepared of any desired viscosity, the measurement of this property and the study of its influence upon lubrication have assumed great practical importance.

In this chapter we purpose discussing the nature of viscosity and viscous flow, including the theory of the viscometer. The bearing of viscosity on lubrication will be discussed in Chapter V. on " The Theory of Viscous Lubrication " ; and practical viscometry, or the method of measuring the viscosity of lubricating oils, will be reserved for Chapter VII. on " Physical Properties and Methods of Examination of Lubricants."

Nature of Viscosity.—All liquids exhibit viscosity, although in varying degree. Thus, if a vessel of water be tilted and then quickly brought back to its original position, so as to set the water in oscillatory motion, it will be found that with each swing the amplitude of the oscillation diminishes, and that in a very short time the movement dies away or becomes imperceptible, and the surface of the liquid comes to rest in an exactly horizontal position.

If a similar experiment he made with sperm oil, a much greater resistance to movement will be observed ; the oscillations produced will not only be much slower, but will also be fewer in number. Very viscous oils, such as castor oil, and viscid liquids like glycerine and treacle, will not even oscillate ; such liquids merely flow steadily until their free surfaces are again horizontal. In all cases the movement ceases sooner or later, and it is the internal friction or viscosity of the liquid which arrests the motion.

Although it is beyond the scope of this book to consider viscosity from its ultimate molecular standpoint, attention may be called to some theoretical aspects of the question.

R. M. Deeley [1] suggested that in solids the atoms or molecules, at normal temperatures, are, in the majority of instances, adhering chemically to each other, and if, owing to vibratory movements within the mass, or other causes, the bonds should be broken anywhere, the *same bonds* are restored again, even if the mass be in a slightly strained condition. If, however, the mass should be considerably stressed, broken bonds may make new attachments, and the solid be plastically deformed. In the case of liquids, although the majority of the molecules are bonded by chemical forces, a proportion of them,

---

[1] *Phil. Mag.*, 1888, p. 156.

depending upon the temperature, etc., are in a free or partially free condition, bonds being continually broken and remade; but instead of remaking the original bonds, new ones are often made. Deeley remarks: "Gravity may, therefore, give rise to a slow but continuous change of form in an elastic substance in the interior of which liquefaction and resolidification are constantly going on."

C. V. Raman[1] writes: "I have suggested that the viscosity of liquids and its variation with temperature may be explained on the hypothesis that the liquid state of aggregation is composite in character; that it is composed in part of molecules 'rigidly' attached to each other, as in a solid, and in part of molecules which are relatively mobile, as in the gaseous state."

Irving Langmuir[2] also advances the same explanation for viscosity. He remarks: "The mobility of a liquid is thus due to a shifting of the relative positions of atoms which are all chemically combined with each other." Readers who are interested in the theoretical aspect of the subject will find it discussed by Bingham in his recent work.[3] It also appears that a definite relationship has been proved to exist between viscosity, molecular weight, and molecular free volume; Batschinski's[4] work in this direction having been strongly corroborated by Macleod[5] and others.

Cohesion and Viscosity.—Some writers have assumed a relationship between viscosity and cohesion, but no connection has yet been proved to exist. Considerations such as the following will show that there is no necessary relation between them.

A sphere of soft iron may be slowly rotated around the pole of a powerful magnet with very little difficulty, although considerable force is required to draw the ball and magnet apart. Similarly, the molecules of water move about each other with great freedom, and the liquid has a very low viscosity in consequence; yet, according to the calculations of Young and Dupré, the force required to tear the molecules apart is equal to a pressure of about 25,000 atmospheres.

Viscous Flow and Lubrication.—As the value of an oil for lubricating depends very largely upon its viscosity, the laws of viscous flow will be considered at some length. We will endeavour to state the mathematics of the subject in as simple a manner as possible, illustrating by means of diagrams those conditions of flow a fairly complete explanation of which is necessary in order to obtain a proper understanding of the part viscosity plays in lubrication.

The conditions of motion of a fluid film enclosed between two relatively moving surfaces differ somewhat from the flow of the same liquid through a capillary tube. In the one instance, we have the conditions obtaining between lubricated surfaces, and in the other, the conditions of flow under which viscosity is most readily and accurately measured. Also when the film between the lubricated surfaces is very thin and approaches molecular dimensions, it adheres to the solid surfaces, and the property known as oiliness comes into play. This is quite distinct from viscosity.

Viscous Flow between Parallel Horizontal Planes having Differential Tangential Motion.—When a fluid lubricant is interposed between two solid surfaces, one of which is in tangential motion and the other at rest, that portion of the fluid which is in contact with and adherent to the moving surface is

---

[1] *Nature*, cxi. (1923), p. 601.
[2] *Jour. Amer. Chem. Soc.*, xxxix. (1917), p. 1858.
[3] *Fluidity and Plasticity*, by E. C. Bingham, 1922 (M'Graw-Hill Publishing Co.).
[4] *Phys. Zeit.*, **13**, 1157.
[5] *Trans. Faraday Soc.*, xxi., August 1925.

constrained to move with it, while that portion which is adherent to the surface which is at rest remains motionless. Between the two surfaces the fluid may be regarded as consisting of a series of superposed layers, each moving at a speed proportional to its distance from the solid, fixed surface. This, the simplest form of viscous flow, is illustrated in fig. 38.

A stratum of a viscous medium is enclosed between two parallel planes, XX and YY, the upper of which is supposed to be moving with uniform velocity in the direction of the arrow, whilst the lower remains fixed. The motion of the fluid must be considered as having reached a steady state, the force producing the motion being supposed to act solely along the plane XX in the direction of the arrow.

The liquid medium may be regarded as made up of a series of infinitely thin superposed planes (a coarse illustration being a pack of cards), the topmost and lowest of which are held by cohesion in immediate contact with the solid surfaces. The topmost plane of liquid is, therefore, carried along by the moving surface XX, and the lowest plane is held stationary by the fixed surface YY. The intermediate planes of the liquid derive their motion solely from that of the plane XX, the force acting upon which is propagated downwards from stratum to stratum by the internal friction or viscosity of the fluid.

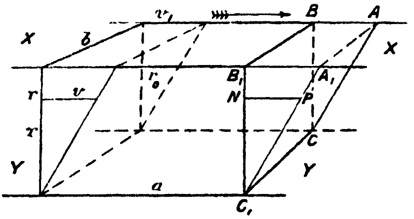

FIG. 38.

As the frictional resistance is absolutely uniform throughout the fluid, each liquid plane must move over the one immediately below it exactly the same distance in the same time; and, therefore, any row of points in contiguous planes, forming at one moment the vertical straight line C_1B_1, will have moved, after a certain interval, into positions on the inclined straight line A_1C_1. If the length of the line A_1B_1 be taken to represent the velocity with which the upper plane is moving, then the length of the line PN will represent the velocity of the fluid at any point in the plane passing through N. In such a case, which is virtually that presented by a properly lubricated bearing, there is no friction between the two solid surfaces, for they do not touch, and yet force, continuously applied, is required to keep the surfaces in relative motion. The frictional resistance, as already pointed out, is wholly due to the sliding of the liquid layers one over the other, *i.e.* to the resistance offered by the liquid to shear. It has been necessary to deal with this subject in some detail, for the action of a lubricant is sometimes stated to result from the *rolling* of the molecules of the lubricant over each other, and over the solid surfaces between which they pass. Such a view, however, cannot be justified by an appeal to experiment.

The force required to maintain continuous relative motion between opposing plane surfaces, such motion being of the nature of a shearing stress, is measured by the stress per unit area of either of the planes. Thus we may write

$$F = fA \quad . \quad . \quad . \quad . \quad . \quad . \quad . \quad (1)$$

where F is the total force, f the force per unit area, and A the area of the planes over which the stress acts.

Since no stresses other than those transmitted by shear act on the mass of liquid abr_0, any section through it parallel to the two bounding planes is exposed to the same stress per unit of area as is the liquid in contact with the planes. If A_1C_1 becomes the position after the lapse of one second of a normal line of section, such as B_1C_1, then the inclination of the line A_1PC_1

will be the same throughout its length, and it must be a straight line. Also the length B_1A_1 represents the velocity of the upper plane, and the length NP the velocity at a distance B_1N from XX.

Hence, since $\frac{NP}{NC_1}=\frac{B_1A_1}{B_1C_1}$ we may write $\frac{v}{x}=\frac{v_1}{r_0}$, where v is the velocity at a distance x from YY, and v_1 and r_0 are their values at the surface XX.

The stress f is, therefore, proportional to $\frac{v}{x}$, which we may call the rate of distortion, and we may make

$$f=\eta\frac{v}{x} \quad . \quad . \quad . \quad . \quad . \quad . \quad . \quad (2)$$

where η is a constant which varies with the temperature for any liquid, and is known as the *coefficient of viscosity* of that liquid.

Further,

$$F=fA=fab \quad . \quad . \quad (3); \qquad =\eta\frac{v}{x}A \quad . \quad . \quad (4); \qquad =\eta\frac{v_1}{r_0}A \qquad (5)$$

$$\therefore \quad \eta=\frac{Fr_0}{v_1A} \quad . \quad . \quad (6); \qquad \text{and } v_1=\frac{Fr_0}{\eta ab} \quad . \quad . \quad . \quad (7)$$

$$\text{Also, the rate of distortion} \quad . \quad . \quad . \quad . \quad =\frac{v_1}{r_0} \quad =\frac{F}{\eta A} \quad . \quad . \quad . \quad . \quad (8)$$

Viscosity in Absolute Measure.—If v_1, A, and r_0 are each unity, then $\eta=F$, and the viscosity η of a substance is then measured by the tangential force per unit area of either of two horizontal planes at the unit of distance apart, one of which is fixed, while the other moves with unit velocity, the space between the planes being filled with the viscous substance.

By the establishment of the above simple working definitions we are able to form equations applicable to all problems involving viscous flow.

Bingham and Jackson[1] write: "It can probably be agreed that all viscosity measurements should be made under conditions such as that the results can be expressed in absolute units. It is further desirable that, if specific viscosities be used, the same substance be taken as standard by all, and that the absolute viscosity of the standard be definitely agreed upon, just as there is general agreement in the acceptance of atomic weights. If the suggestion of Deeley and Parr[2] is accepted, and the absolute C.G.S. unit of viscosity be known as the "poise," then it is convenient to use the submultiple of this unit, which is one-hundredth as large, and which may therefore properly be called the centipoise (*cp.*). It so happens that the centipoise is almost exactly the viscosity of water at 20° C., hence viscosities expressed as centipoises have the added advantage of being at the same time the specific viscosity of the substance referred to water as standard at almost exactly 20° C."

Both in the measurement of the viscosity of various liquids, and in the problems which have to be solved in the theory of lubrication, it is necessary that we should be able to find the volume of the liquid displaced under varying conditions. Although this can be simply accomplished by methods involving the calculus, it is better for the clearer understanding of lubricating problems to attack the matter geometrically as well.

The volume V swept through by any cross-section $B_1B\ CC_1$ in moving to the position $A_1A\ CC_1=\frac{v_1br_0}{2}$ . . . . (9)

and this is a measure of the volume of liquid displaced.

---

[1] *Scientific Papers of the American Bureau of Standards*, No. 298 (1917), p. 73.

[2] *Phil. Mag.*, [6], **26** (1913), p. 85.

Substituting for v_1 its value from equation (7)

$$V = \frac{Fr_0^2}{2a\eta} \quad . \quad . \quad . \quad . \quad . \quad . \quad (10)$$

and for F its value from (3)

$$V = \frac{fr_0^2 b}{2\eta} \quad . \quad . \quad . \quad . \quad . \quad . \quad (11)$$

Viscous Flow under the Action of Gravity between Fixed Planes.—We have hitherto considered only the conditions of flow which result from a stress applied solely at a liquid surface parallel to the direction of flow, the viscosity of the fluid setting in motion the whole mass in such a way that the rate of shear is everywhere the same. But when the liquid flows between two fixed plane surfaces, parallel to each other, and the force setting the fluid in motion acts either upon each particle of the liquid, or equally over the whole of a section normal to the direction of flow, the velocity at different points in the liquid is not proportional to the distance from the solid surface, $\frac{v}{x}$ ceases to equal $\frac{v_1}{r_0}$, and the rate of shear is not the same at all points.

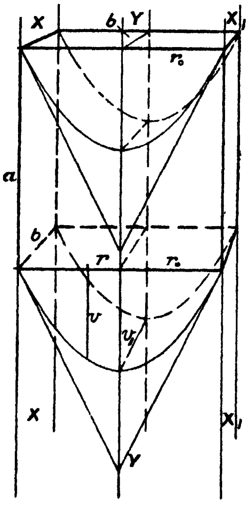

Fig. 39.

Although neither in the measurement of the viscous constants of lubricants, nor under the conditions obtaining when lubricants are applied, do we meet with quite the conditions of flow which obtain between stationary parallel planes of infinite width, it is advisable to consider this particular case; for it serves to bridge over the gap between the conditions under which a lubricant really works, and those under which its viscosity is measured.

In fig. 38 the rate of shear, which is the same at all points, is indicated by the slope of the straight line A_1C_1; but when the rate of shear varies regularly across the section the line becomes curved, as is shown in fig. 39, where the viscous liquid is supposed to be flowing between two *vertical* parallel plane surfaces XX and X_1X_1, under the influence of uniform pressure acting on the surfaces r_0b, on each side of YY. Here, in place of a force f, acting on unit area of YY, parallel to the direction of motion, we have a pressure p, acting on unit area of the surface br_0, the latter being normal to the direction of flow. This force may result either from the pressure of a liquid column, or it may be regarded as the effect of gravity acting with an equal force on each particle of the liquid. In either case the nature of the flow is the same, but it is more convenient to treat it as being due to a pressure p, acting on a surface which is normal to the direction of flow.

If we take a length a at either bounding plane XX, then the whole pressure on the section br_0 there tends to shear the liquid, the total pressure on half the cross-section being pbr_0,

and from (8) the rate of shear at the boundary

$$= \frac{pbr_0}{\eta ba} = \frac{pr_0}{\eta a} \quad . \quad . \quad . \quad . \quad . \quad . \quad (12)$$

We also find that at any distance r from YY the rate of shear $= \frac{pr}{\eta a}$. (13)

and we see that the rate of shear is directly proportional to the distance r from the plane YY. That is to say, at any point C (fig. 40) in the liquid the rate of shear is proportional to BC. Now $\frac{AB}{BC}$ is the rate of shear, CA being tangential to the curve at C. Draw CD perpendicular to CA, to cut the centre line in D. Then we have $\frac{BD}{BC}=\frac{BC}{BA}$. But $\frac{BC}{BA}$ is proportional to $\frac{1}{CB}$ (see above). Therefore $\frac{BD}{BC}$ is proportional to $\frac{1}{BC}$, or BD is constant.

But BD is the subnormal of the curve $C_1E_1C_1$, which can easily be shown

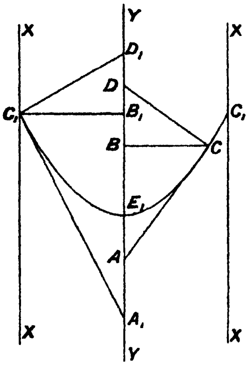

FIG. 40.

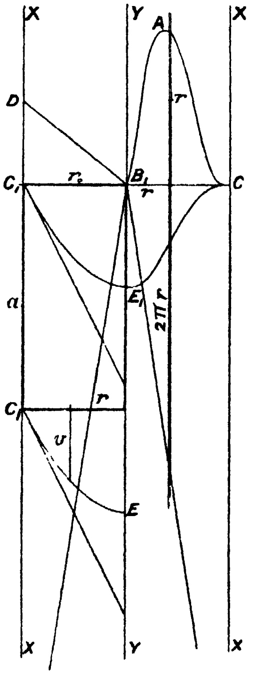

FIG. 41.

to be a parabola, and therefore the volume of fluid passed on each side of YY, in unit time, is half the volume of a parabolic prism $C_1E_1C_1$ of length b.

Now, since the curve is a parabola,

$$B_1E_1=\tfrac{1}{2}B_1A_1,$$

and, from equation 12,

$$\frac{B_1A_1}{B_1C_1}=\frac{pr_0}{\eta a};$$

therefore,

$$B_1A_1=\frac{pr_0^2}{\eta a},$$

and

$$B_1E_1=\frac{pr_0^2}{2\eta a} \qquad (14)$$

Now, the volume enclosed by the parabolic curve $C_1E_1=\frac{2}{3}$ the area of the base × the perpendicular height.

Therefore, the volume passed in unit of time on each side of the plane YY

$$= \tfrac{2}{3} \times r_0 b \times \frac{p r_0^2}{2\eta a} \quad . \quad . \quad . \quad . \quad . \quad . \quad (15)$$

$$= \frac{p r_0^3 b}{3\eta a} \quad . \quad . \quad . \quad . \quad . \quad . \quad (16)$$

and the volume passed in any given time (t) will be

$$\frac{p r_0^3 b t}{3\eta a} \quad . \quad . \quad . \quad . \quad . \quad . \quad . \quad (17)$$

The following illustration may also be found helpful, as serving to demonstrate the parabolic distribution of velocities during flow through a capillary tube. Consider an indefinitely large number of concentric, vertical cylinders of equal thickness and length, and separated from one another by thin films of some viscous body, the thickness of these films being the same between each pair of cylinders. Now let the cylinders slip downwards under their own weight, the outermost one being fixed. Let the curve AOB (fig. 42) represent the mid-section of the surface formed at any instant by the upper ends of the cylinders. In the figure, the cylinders are shown in a horizontal position for convenience. Take O as origin, etc., and let the co-ordinates of the point A be x_0, y_0. Let the length of each cylinder be l, the thickness being dy.

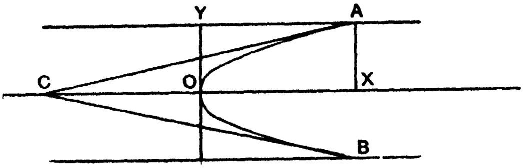

Fig. 42.

If AC be the tangent to the curve at A,

then $$\frac{dy_0}{dx_0} = \frac{y_0}{\text{CX}} \quad . \quad . \quad . \quad . \quad (a)$$

Now dx_0 at A is due to the weight of all the cylinders, namely $\pi y_0^2 l \rho$ acting over the surface $2\pi y_0 l$ (ρ=density of cylinders).

Take any point P on curve having co-ordinates x, y. Here dx is due to the weight of $\pi y^2 l \rho$ acting over the surface $2\pi y l$.

$$\therefore\ dx = dx_0 \times \frac{\pi y^2 l \rho}{\pi y_0^2 l \rho} \times \frac{2\pi y_0 l}{2\pi y l}$$

$$= dx_0 \times \frac{y}{y_0}.$$

And since all the dy's are equal,

$$\frac{dy}{dx} = \frac{dy_0}{dx_0} \times \frac{y_0}{y} = \frac{y_0^2}{y.\text{CX}} \text{ (from } a\text{)},$$

or $$dx = y\,dy \times \frac{\text{CX}}{y_0^2} \quad . \quad . \quad . \quad . \quad . \quad . \quad . \quad (\beta)$$

$$\int_0^{x_0} dx = \frac{\text{CX}}{y_0^2} \int_0^{y_0} y\,dy$$

$$x_0 = \tfrac{1}{2}\text{CX} \quad . \quad . \quad . \quad . \quad . \quad . \quad . \quad . \quad (\gamma)$$

If we give CX this value in equation (β) and integrate both sides we get

$$x+\text{constant}=\frac{y^2x_0}{y_0^2}.$$

By giving to x and y the values x_0 and y_0 the constant is seen to be zero. Hence

$$x/y^2=x_0/y_0^2$$

or

$$y^2=cx,$$

where c is a constant; and this is the equation for a parabola.

Viscous Flow through Capillary Tubes.—As will be seen when the theory of lubrication comes to be discussed, the conditions of viscous flow obtaining between plane surfaces are all important. Still such conditions are not those under which the coefficient of viscosity η is most accurately and easily measured. The most concordant values have been obtained by measuring the rate of flow through capillary tubes in which, as between plane surfaces where the flow results from the pressure of a given head of liquid, the rate of shear is greatest at the bounding surface.

Fig. 41, on p. 77, shows diagrammatically the conditions of flow obtaining in a capillary tube, at a point some distance from the end of which the liquid enters, the flow having reached a state of equilibrium; for at the inlet end the effects of inertia manifest themselves.

In a portion of tube of length l, the whole pressure on the cross-section C_1C tends to shear the liquid at the bounding surface, and the area over which the pressure acts is equal to $2\pi r_0 l$ Now, the area of the cross-section of the tube$=\pi r_0^2$. Therefore, the total pressure over the cross-section $=p\pi r_0^2$, and from (8) the rate of shear at the boundary$=\frac{p\times\pi r_0^2}{\eta\times 2\pi r_0\times l}$,

which resolves itself into $\frac{pr_0}{2\eta l}$ . . . . (18)

In the case of a small cylinder of liquid concentric with the tube and of radius r, the rate of shear at its boundary$=\frac{pr}{2\eta l}$ . . . . . . (19)

Therefore, the rate of shear is directly proportional to the distance from the centre line of the tube, and the curve indicating the rate of distortion is, as in the case of the parallel planes, a parabola; and the volume passed in unit of time is the volume of a paraboloid of revolution, having a base of radius r_0 and a height$=B_1E_1=\frac{1}{2}B_1A_1$ (fig. 40).

From (18) we have

$$\frac{B_1A_1}{B_1C_1}=\frac{pr_0}{2\eta l} \quad . \quad . \quad . \quad . \quad . \quad (20)$$

Therefore,

$$B_1A_1=\frac{pr_0^2}{2\eta l} \quad . \quad . \quad . \quad . \quad . \quad (21)$$

and

$$B_1E_1=\frac{1}{2}B_1A_1=\frac{pr_0^2}{4\eta l} \quad . \quad . \quad . \quad . \quad . \quad (22)$$

Now the volume of a paraboloid of revolution$=\frac{1}{2}$ the area of the base × the perpendicular height. Therefore, the volume passed in unit time

$$=\frac{1}{2}\times\pi r_0^2\times\frac{pr_0^2}{4\eta l} \quad . \quad . \quad . \quad . \quad . \quad . \quad (23)$$

or

$$\frac{\pi}{8}\cdot\frac{pr_0^4}{\eta l} \quad . \quad . \quad . \quad . \quad . \quad . \quad (24)$$

And the volume V passed in any given time $=\frac{\pi}{8}\cdot\frac{pr_0{}^4t}{\eta l}$ . . . . (25)

We may find an expression for the viscosity of the liquid from the above, by substituting for p its equivalent in terms of the head and density of liquid, and the force of gravity, *i.e.*

$$\eta=\frac{\pi g\rho hr_0{}^4t}{8Vl} \quad . \quad . \quad . \quad . \quad . \quad . \quad (26)$$

Poiseuille was the first to demonstrate experimentally that the volume of liquid passed by a capillary tube is directly proportional to the pressure urging it along, and to the fourth power of the radius of the tube, and inversely as its length. On this account the above is known as *Poiseuille's formula*, and may be used, after making a small correction for h, for the purpose of calculating *absolute* viscosities.

Physical and Mechanical Viscosity.—As Osborne Reynolds has pointed out,[1] it by no means follows that for each particular liquid a fixed value of η need necessarily exist, such that f calculated by equation (2) agrees with the values of f determined by experiment for all values of v and r_0. As a matter of fact, experiment shows that liquids have apparently two viscosities; for, as is well known to engineers, in large pipes the resistance to flow varies as the square of the velocity, and not directly as the velocity. When such is the case, η is not constant in value.

Carefully conducted experiments by Coulomb, Poiseuille, and others, on the rate of flow through long capillary tubes, have proved conclusively that the resistance under certain conditions is proportional to the velocity, and that η has then a constant value. Poiseuille's experiments also proved that the volume passed varies as the fourth power of the radius of the tube. Such being the case, we may safely regard the flow of liquids through tubes of very small bore as being controlled by the physical viscosity of the liquid, and the equation (26) as a means of calculating the value of η when the other values have been determined experimentally But the fact must not be lost sight of, that to obtain a correct result, the size of the tube, the intensity of the pressure producing the flow, and the viscosity of the liquid, must bear certain relations to each other. The reasons for this have been successfully worked out by Osborne Reynolds, who demonstrated that the two viscosities, physical and mechanical, result from a change in the character of the flow from that of direct parallel to that of sinuous or eddying motion.

To show this change in the nature of the flow when the velocity reaches a certain value, a long, bell-mouthed glass tube was immersed horizontally in a tank of water. One end of the tube passed through the side of the tank and was bent vertically downwards for several feet, being terminated by a stop-cock. By partially opening or closing this cock, the water could be made to flow through the tube at any desired speed. Terminating opposite the bell-mouthed tube, and immersed in the water, was fixed a much smaller tube through which a highly coloured stream of water was discharged. When the speed of flow was small, the coloured stream passed through the whole length of the bell-mouthed tube in a perfectly straight line (fig. 43). When, however, by opening the cock, the speed reached a certain value, the band of colour suddenly broke up and discoloured the whole of the liquid. By the intermittent light of an electric spark, the mass of colour resolved itself into a series of more or less distinct curls, showing eddies, as in fig. 44.

A series of experiments made it clear that so long as the flow remained direct and steady, the resistance varied directly as the velocity, but as soon

---

[1] "Theory of Lubrication," *Phil. Trans.*, 1886, p. 165.

as the critical speed was reached, the resistance became proportional to the square of the speed, or thereabouts, and sinuous motion was set up. The critical speed was found to vary directly as the viscosity, and inversely as the diameter of the tube and the density of the liquid.

Although it is an experimentally ascertained fact that there is a certain critical speed for each size of tube and each liquid, below which the resistance varies directly as the velocity, and above which the resistance is proportional to the square of the velocity, the reason for the change in the nature of the flow has yet to be satisfactorily explained.

We have thus two essentially distinct viscosities: the one a mechanical viscosity, arising from the irregular motion of the fluid, and the other a true physical property of the fluid, depending in some way upon its structural peculiarities. Although the value of the physical viscosity determines in some measure which of the viscosities shall control the flow of the fluid, when the flow is once in accordance with the mechanical viscosity, the physical viscosity does not in any direct way show itself. Thus, when in a particular tube the velocity of oil or treacle is sufficient for the resistance to vary as the square of the velocity (*i.e.* for the liquid to flow with sinuous motion), the resistance is practically the same as it would be with water at the same velocity, although the physical viscosity of water may be more than a hundred times less than that of the oil.[1]

The critical velocity is rarely if ever reached by lubricating films, and when the lubrication is perfect, the resistance to relative motion is due to the physical viscosity of the lubricant.

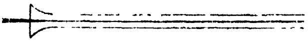

FIG. 43.

FIG. 44.

Determinations of viscosity made by measuring the resistance offered to the motion of discs or cylinders immersed in liquids are, for the most part, unsatisfactory. In such cases turbulent motion is locally, if not generally, set up, and the results are misleading. For this reason such methods of measuring, or attempting to measure, the viscosity need not be referred to here.

It has been suggested that liquids flowing in contact with solids not only suffer internal shear but slip at their boundaries. Navier, in 1822, even supposed that the movement due to slip might be greater than that due to shear, but Poiseuille by careful experiment disproved this and could find no evidence of slip whatever. Pétroff, in his investigations relating to the theory of lubrication, nevertheless inserts expressions in his equations to include such "external liquid friction," as he considers that his experiments with sperm, olive, and rape oils definitely proved the existence of it, though he admits that the movement due to slip is so extremely small as to be practically negligible. His paper was published in 1885, a synopsis in German[2] appeared two years later, and a French one in 1889.[3] Couette,[4] in 1890, made experiments which convinced him that there was no slip, but Pétroff, after comparing Couette's results with his own, thinks that they show that liquids such as rape oil do not adhere so perfectly to glass as not to slip at all.[5] Osborne Reynolds[6]

---

[1] Osborne Reynolds, *Phil Trans.*, 1895, p. 153.

[2] *Neue Theorie der Reibung*, von N. Pétroff, translated from the Russian by L. Wurzel. Leopold Voss, Hamburg and Leipzig, 1887.

[3] "Résultats les plus marquants de l'étude théorique et expérimentale sur le frottement médiat," *Revue de Méchanique*, vii. (1900), 571–692.

[4] *Zeit. für Physik. und Chem.*, vi. (1890), 524.

[5] "Sur le frottement des liquides," *Bull. Acad. Imp. Sci. St Petersburg*, v. (1896), No. 5

[6] *Phil. Trans.*, 1895, p. 167.

considered that it may be taken as proved that there is no slipping between the solid surface and water, even when f reaches the value of 0·702 lb. per sq. inch, and as regards oils, the probability seemed to him to be that the limit within which there is no slipping would be much higher than in the case of water. Some experiments by Helmholtz and Piotrowski[1] led them to believe that there was no slipping at the boundary, and Helmholtz and Pétroff refer to some experiments made by Girard[2] on viscous flow through copper tubes which were regarded as also proving the existence of slipping at the boundary. Whetham[3] made a series of experiments with water in glass tubes, in copper tubes, in copper tubes oiled, and in copper tubes amalgamated. He also repeated the experiments of Girard; but in all cases the results failed to show any slipping at the boundary. Koch[4] experimented with mercury in glass tubes and water in paraffin tubes; and since in neither case does the liquid wet the solid boundary, slipping, if it occurred at all, would be most likely to show itself here. In each case, however, the result was an emphatic negative. The pressure in some cases was nearly sufficient to cause unsteady flow.

It appears from the foregoing that the experimental evidence shows that the existence of slip at the boundary, if it exists at all, is very small indeed, and quite negligible for all practical purposes.

Effects of Temperature and Pressure.—With rise of temperature the viscosity of liquids decreases—sometimes very rapidly. In this respect liquid lubricants differ greatly from each other. Oils of animal and vegetable origin retain their viscosities better than those of mineral origin, but they all become very mobile with rise of temperature, and lose, in a great measure, their viscous lubricating value. Not only is it necessary, therefore, to keep a liquid, while testing it, at a very uniform temperature, but the effect of varying temperature must be carefully observed.

Although for every liquid there is a definite viscosity value corresponding to any particular temperature, yet when the temperature is rapidly changed the corresponding change in the viscosity is not necessarily instantaneous, and sometimes takes a measurable and appreciable time to settle down to a constant value. This peculiar lagging effect is known as *hysteresis*, and although not commonly met with to a noticeable extent, is occasionally exhibited by oils and other liquids whose molecules are believed to be highly associated. Hence, since the degree of association is one of the chief factors governing the viscosity, one can imagine the time necessary for the molecular complex to attain the state of equilibrium corresponding to any particular temperature, as affording in all probability an adequate explanation of this effect.

Trouton[5] and Deeley[6] have shown that when the force producing shear is removed there is a slow, partial movement towards recovery, and this gradually falls to zero with time. From this it is clear that changes in the rate of shear are accompanied by phenomena which are little understood, the mathematical treatment of viscosity assuming that the steady state of flow always prevails.

Viscosity varies also with pressure, water having its viscosity at first decreased by this means. As, however, the pressure becomes greater the viscosity starts to increase, and further increase in pressure gives rise to a steady increase in viscosity as in other liquids. This initial sagging in the pressure-viscosity

---

[1] *Sitzungsberichte d. k. k. Akademie der Wissenschaften zu Wien*, xl. (1860), p. 686.

[2] *Mémoires de l'Institute de France*, 1813, 1814, 1815.

[3] *Phil. Trans.*, clxxxi. (1890), A, pp. 559–582.

[4] *Wied. Ann.*, xiv. p. 1.

[5] *Proc. Roy. Soc.*, lxxvii. p. 429.

[6] *Ibid.*, lxxxi. p. 258.

curve of water becomes less pronounced as the temperature is raised, until at 32° C. Hauser[1] found it was quite absent, water above this temperature behaving just like other liquids. Hence Macleod explains this anomaly in the case of water as being due to association of the molecules.

On the other hand, concentrated solutions of common salt have their viscosities normally increased by pressure, as has also oil of turpentine. Since lubricating films are frequently subjected to very considerable loads, a thorough knowledge of their behaviour when under great and varying pressures becomes very desirable. With this end in view, Hyde[2] conducted a series of experiments on various lubricating oils under different pressures up to 1260 kilos. per sq. cm. He selected Bayonne and F.F.F. Cylinder Oil as representative of the class of mineral oils; trotter and sperm as representing oils of animal origin; and rape oil was chosen as a typical vegetable oil. The results of his experiments demonstrate beyond all doubt that all classes of oil show an increase in viscosity when subjected to increased pressure. At about 300 atmospheres the mineral oils had doubled their viscosities, whereas with the fatty oils the increase was roughly 50 per cent. At 1220 atmospheres, which was the highest pressure at which he worked, the mineral oils had increased approximately sixteenfold and the fatty oils about fivefold. Subsequently Hersey,[3] working at pressures as high as 4000 kilos. per sq. cm. and at temperatures as high as 100° C., found that at these elevated pressures and temperatures the distinction between the two classes of oil tended to disappear.

These results should prove very instructive to the engineer. For example, in the case of a journal and bearing which were not in perfect adjustment the distribution of the load might not be uniform: but this behaviour of the lubricating film would tend to prevent the oil from being squeezed out from the regions where the pressure was greatest and thus indirectly help to avoid seizing, etc.

Conditions determining Steady Flow.—The formulæ obtained for the flow of liquids through capillary tubes only hold good, as we have seen, so long as the flow is direct and not sinuous. When high pressures and comparatively short tubes of large bore are employed, the liquid, if not very viscous, ceases to flow steadily in paths parallel with the bounding walls; the motion becomes sinuous, and the resistance offered to the flow of the liquid ceases to be directly proportional to the velocity. The length and diameter of the capillary tube, and the pressure with which a liquid (of given viscosity and density) is forced through it, must therefore be properly proportioned to each other, or the physical viscosity cannot be even approximately determined.

Osborne Reynolds[4] has found that for the flow to be steady the product of the mean velocity $\bar{v}$, the radius of the tube r_0, and the density of the liquid ρ, divided by the viscosity η, must—in the case of a round tube—be less than a certain constant. Thus, denoting the value of this fraction by c, the required conditions for steady flow are

$$c=\frac{r_0\bar{v}\rho}{\eta}<700 \quad . \quad . \quad . \quad . \quad . \quad (27)$$

This constant (700) is the same whatever system of weights and measures be adopted, for the divisor and dividend each involve the same powers of length, mass, and time.

---

[1] *Ann. Physik,* (4) 5, 597 (1901).
[2] *Proc. Roy. Soc.,* A, xcvii. p. 240.
[3] *International Air Congress,* June 1923.
[4] *Phil. Trans.,* 1895, p. 149.

When the value of c is less than 700, the volume of liquid passed is, as already demonstrated,

$$\frac{\pi}{8} \cdot \frac{h\rho g r_0^4 t}{\eta a},$$

and the mean speed of flow

$$\bar{v} = \frac{V}{\pi r_0^2 t} = \frac{\pi}{8} \cdot \frac{h\rho g r_0^4 t}{\eta a \pi r_0^2 t}$$

$$= \frac{h\rho g r_0^2}{8\eta a} \quad . \quad . \quad . \quad (28)$$

Substituting in equation (27) the value of $\bar{v}$ in equation (28) we have

$$\frac{r_0^3 h\rho^2 g}{8\eta^2 a} < 700 \quad . \quad . \quad . \quad . \quad (29)$$

and

$$\frac{hgr_0^3}{a} < 5600\frac{\eta^2}{\rho^2} \quad . \quad . \quad . \quad (30)$$

Unless the proportions of the viscometer, and the physical properties of the liquids used in it, be in accordance with the requirements of this equation, the flow will be unsteady, and the true viscosity cannot be calculated. When absolute viscosities are desired, the viscometer should be designed so as to make the value of c as small as possible.

But sinuous motion, even when c is very much greater than 700, does not set in, as will be seen from fig. 44, immediately the fluid enters the tube. With tubes having trumpet-shaped orifices the disturbances appear and the flow becomes sinuous at about thirty diameters from the end; but when the end is flat the disturbances approach the inlet end more closely. The flow of liquids in very short tubes is, therefore, free from eddies, even though the viscosity of the liquid, the diameter of the tube, and the rate of flow may be such as to make c greater than 700. In such cases, although the flow is steady throughout the tube for some distance from the inlet, the velocities are not such that the rate of distortion is proportional to the distance from the centre. Such short tubes may, therefore, be used to obtain comparative, but not absolute, viscosities, even with very mobile liquids. The conditions which determine whether the flow shall be steady or unsteady are often very complex, for the stream lines may be parallel, as in tubes or between parallel surfaces; convergent, as in a conical mouthpiece; or divergent, as in the latter case when the motion is reversed.

The circumstances which conduce to a direct, steady motion are (*a*) high viscosity or fluid friction; (*b*) a free surface, as in a fountain jet; (*c*) solid converging boundaries; and (*d*) curvature, with the velocity greatest outside.[1]

The circumstances which conduce to sinuous motion are—(*a*) particular variation of velocity across a stream, as when a stream flows through still water; (*b*) solid bounding walls; (*c*) solid diverging boundaries; and (*d*) curvature, with the velocity greatest inside.

Energy of Flow through Capillary Tubes.—When the coefficient of viscosity is calculated from Poiseuille's formula (26), it is assumed that the character of the motion is the same at all sections of the tube, and that all the energy supplied to the liquid is converted into heat within the tube. But the coefficient so obtained is only approximately correct, for not only is there some resistance to the flow of the liquid outside the tube, but the steady condition of flow within the tube is not reached until the liquid has travelled some distance from the orifice. The liquid, when it approaches the critical speed, often possesses considerable velocity, and an appreciable amount of energy then exists as kinetic energy in the issuing fluid. As this energy results from

---

[1] *Proc. Royal Institution*, 28th March 1884.

the pressure due to the head of liquid, a deduction on this account should be made if accuracy is aimed at.

We have, consequently, four sources of error to consider and, if possible, to allow for- (*a*) external viscous resistance in the liquid at the ends of the tube; (*b*) abnormal conditions of flow at inlet end of tube; (*c*) surface tension effects at discharge orifice; and (*d*) energy of flow at point of discharge. Correction (*a*) was investigated by Couette,[1] who suggested as a result of experiments of his own and also after recalculating some of Poiseuille's recorded figures, that this source of error should be allowed for by adding to the length of the capillary a quantity equal to 2·87 times its diameter. The effective length of the tube would thus be $l + nr$, where $n = 5{\cdot}74$, r being the radius. Knibbs,[2] who later made an extended study of the subject, found for n all values from $+11{\cdot}2$ to $-5{\cdot}2$; and Bingham and White[3] corroborated Knibb's results, and concluded that no definite value could be assigned to n. It may be observed in passing, that since this correction relates to *viscous* resistance, which has to be overcome before the liquid enters the tube, and is in no wise concerned with kinetic considerations, it would seem that it could be more satisfactorily studied by experimenting with liquids of such viscosity that kinetic energy effects would be negligible. This, however, does not appear to have yet been attempted; most of the experiments having been made with water, or thin liquids in which both the kinetic energy and inlet end corrections have to be taken into account. In view of the conflicting experimental evidence and diversity of opinion under this heading, we have no choice at present but to leave it, and hope that the matter will be cleared up in the near future and a more searching and complete analysis as to the exact nature of this correction undertaken.

Correction (*b*) is best dealt with along with (*d*); in fact they can be grouped together, for, as will be seen, their origin is the same, and both tend to disappear as the velocity of discharge falls off. Correction (*d*), explained below, can be accurately calculated, and takes the form of a quantity to be deducted from the right-hand side of Poiseuille's equation, or of a corresponding quantity to be taken from the head. In either case, the coefficient of this term is unity. Boussinesq, however, from purely mathematical considerations, made a more exact analysis, in which the inlet end disturbances were taken into account and thus obtained the value 1·12 as the coefficient for this term. The decimal part of this number is thus due to (*b*). Knibbs, testing out a number of Poiseuille's recorded runnings, in which no correction had been used, obtained as the value for the above coefficient 1·14, which is a remarkable practical check on Boussinesq's figures. Corrections (*a*) and (*b*) are both small and they become practically negligible when the tube is long; but when the tubes, compared with their diameters, are so short that sinuous motion is not set up, even when the value of c is much greater than 700, the necessary correction often becomes so large that the true viscosity cannot be calculated even approximately. Neither can an allowance for (*d*) be then made, for a state of equilibrium is not reached even at the end of the tube, and the energy of flow cannot be found.

The third source of error (*c*) is of some importance, and is sometimes circumvented by so designing the viscometer that the discharge end of the capillary tube is always immersed in the liquid. An allowance on this head is difficult to make when the liquid flows directly into the air from the orifice, for its value depends upon the curvature of the liquid surface as well as upon the actual

---

[1] *Compt. Rend.*, **107**, 388.

[2] *Proc. Roy. Soc. N.S.W.*, **29**, 77.

[3] *Zeit. physik. Chem.*, **80**, 670.

tension of the surface, *i.e.* upon the dimensions of the drops, or upon the form of the liquid stream and the surface tension of the liquid.

The fourth (*d*) is important, and can be accurately determined when the tube is long and a steady condition of flow is set up, for there is no reason to suppose that any change takes place in the distribution of energy as the discharge orifice is approached.

Correction for Energy of Flow.—That a correction for the energy of flow is necessary was pointed out by Hagenbach,[1] and his method of measuring it has been very generally followed. Later, however, Wilberforce [2] demonstrated that the correction suggested by Hagenbach was too small, and that the true correction was furnished by deducting from the mean head, h, a quantity$=\frac{\bar{v}^2}{g}$, where $\bar{v}$ is the mean velocity of flow through the tube. A geometrical method of demonstrating this is shown in fig. 41, in which the ordinates of the parabolic curve C_1E_1 give the velocities of flow at any distance from the centre line. If they be regarded as representing the successive values of $\frac{v}{v_1}$, where v_1 is the maximum velocity, then B_1E_1 is equal to unity on this scale.

The curve CE_1 is plotted on the same scale to represent the corresponding values of $\left(\frac{v}{v_1}\right)^3$; and finally the ordinates of the curve B_1AC are made proportional to $\left(\frac{v}{v_1}\right)^3 2\pi r$ The ordinates of B_1D are equal on the same scale to $\left(\frac{v}{v_1}\right)^3 2\pi r$.

Now, if we consider a thin cylinder of liquid of radius r, length a, and thickness τ, its energy is

$$\frac{2\pi ra\tau v^3}{2g}$$

and is, therefore, proportional to the area of the part of the curve B_1AC included between the corresponding ordinates.

Hence, the total area of the curve B_1AC is proportional to the energy of flow, and in the same way it can be shown that B_1C_1D would be proportional to the energy of flow if the velocity were constant across the section. If the areas B_1AC, B_1DC_1, be now measured up with a planimeter, B_1AC will be found to be equal to just twice B_1DC_1. Hence, the true energy of flow is equal to twice that obtained on the assumption that the velocity is uniform all over the section.

In this latter case, the correction would evidently be $-\frac{\bar{v}^2}{2g}$. Hence the true correction is $-\frac{\bar{v}^2}{g}$, as shown by Wilberforce and others, or $-1{\cdot}12\bar{v}^2/g$ if we use Boussinesq's coefficient and so correct for the inlet end disturbances at the same time.

When all the values required for calculating the viscosity by Poiseuille's formula (26) are known, the deduction necessary in the value of h is easily obtained, for

$$\bar{v}=\frac{V}{t\pi r_0^2} \quad . \quad . \quad . \quad . \quad . \quad . \quad (31)$$

---

[1] *Pogg. Ann.*, 1860, cix.

[2] *Phil. Mag.*, May 1891.

Substituting this value for $\bar{v}$ we obtain

$$\frac{1{\cdot}12\mathrm{V}^2}{g\pi^2 r_0^{\,4} t^2} \quad . \quad . \quad . \quad . \quad . \quad . \quad . \qquad (32)$$

as an expression for the required correction to be deducted from h. We thus get

$$\eta = \frac{\pi r_0^{\,4} g\rho t\left(h - \dfrac{1{\cdot}12\mathrm{V}^2}{g\pi^2 r_0^{\,4} t^2}\right)}{8\mathrm{V}l}.$$

By now multiplying out and cancelling we throw the equation into its simplest form, which is the one most usually met with, viz. :—

$$\eta = \frac{\pi r_0^{\,4} g\rho t h}{8\mathrm{V}l} - \frac{1{\cdot}12\mathrm{V}\rho}{8\pi l t}.$$

Viscometer Proportions.—In order to obtain the value of η with accuracy, it is necessary that the correction for energy shall be small say one or two per cent. A formula for calculating this percentage is obtained as follows :—

The energy correction being equal to $\dfrac{\bar{v}^2}{g}$

$$h : \frac{\bar{v}^2}{g} : : 100 : \%.$$

Therefore,

$$\frac{100\bar{v}^2}{hg} = \%.$$

Substituting for $\bar{v}^2$ the value from (28)

$$\frac{100 g^2\rho^2 h^2 r_0^{\,4}}{64\eta^2 a^2 hg} = \frac{100 g\rho^2 h r_0^{\,4}}{64\eta^2 a^2} = 1{\cdot}563\frac{g\rho^2 h r_0^{\,4}}{\eta^2 a^2} = \%.$$

This equation, although theoretically correct as it stands, is not well adapted to the actual measurement of viscosity, since it requires a constant value for the head h, and this condition is rarely realised in practice. In nearly every form of capillary tube viscometer the head falls from an initial value h_1 to a final value h_2, and it is not accurate to take the mean of these two values when computing the head ; for what we really require is the average value of h over the whole time of the running ; and on consideration it will be seen that this time-average for the head is not the same thing as the arithmetic mean between h_1 and h_2, but must always be less than the latter. When the containers in which the heads are measured are of uniform cross-section, that is, when $(h_1-h_2)/\mathrm{V}$ is a constant for the apparatus, the time-average value for h can be easily calculated. This was first done by Meissner in 1910 [1] and takes the form of the factor $\dfrac{h_1-h_2}{\log._e h_1/h_2}$ to be substituted for h in the general Poiseuille equation above.

This value, however, is derived on the assumption that all the work done by the liquid is used up in overcoming viscous resistance ; but we have seen that this is never absolutely true. Therefore, to be strictly precise, the kinetic energy term must be taken into account before we can arrive at the true average value for h. This has been done by Dryden [2] and Lidstone,[3] but

---

[1] *Chem. Rev. über die Fett und Hartz Industrie*, xvii. p. 202.

[2] *Tech. Papers*, No. 210, Bureau of Standards, Washington, U.S.A.

[3] *Phil. Mag.*, November 1922.

their equations, which involve the principle of successive approximations, are very unwieldy, and fortunately are of more theoretical than practical interest.

Plastic Friction. Plastic substances, such as tallow, lard, moist china clay, etc., differ from viscous fluids inasmuch as they require that the shearing stress shall reach a certain value before continuous shear takes place. They can, therefore, permanently retain their shapes when the stresses are unequal in different directions; *i.e.* they can transmit stresses without undergoing continuous shear. Sometimes the plastic yield-point is very low, and the substance behaves much as does a viscous liquid. A layer of lard, for example, placed between two smooth surfaces, which are prevented thereby from touching, requires the exercise of a definite stress to cause tangential motion; but when once relative motion is set up by the action of a sufficiently powerful force, the resistance increases with each increase in the rate of shear. In the case of plastic friction, therefore, we have something corresponding to the static friction of solid surfaces in contact; but whether the plastic yield-point varies with the pressure normal to the direction of flow (shear), or whether the resistance is proportional to the rate of shear, is uncertain.

The distinction between plastic or soft solids and viscous ones was clearly recognised by Maxwell.[1] He says: "When continuous alteration of form is only produced by stresses exceeding a certain value, the substance is called a soft solid, however soft it may be. . . . Thus, a tallow candle is much softer than a stick of sealing-wax; but if the candle and the stick of sealing-wax are laid horizontally between two supports in summer, the sealing-wax will, in a few weeks, bend with its own weight, while the candle remains straight. The candle is, therefore, a soft solid, and the sealing-wax a very viscous fluid."

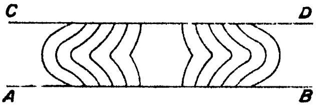

FIG. 45.

It is evident that the same substance, for instance, lard or tallow, may act when in use either as a plastic lubricant or a viscous one, for at moderately high temperatures these substances melt, and may become viscous lubricants, *i.e.* true oils.

At first sight it would seem that the resistance to shear offered by a plastic substance would be so great that it would be altogether unsuitable for lubricating purposes. But such is by no means the case; indeed, at very low speeds the resistance to motion of a film of plastic grease is often smaller than that of an oil film, for the grease film is much thicker, and the rate of distortion is less.

When two surfaces are forced together between which there is a plastic substance, the pressure or stress is transmitted from point to point, shear takes place, and the intervening lubricant is expelled. A viscous liquid under such conditions is expelled until the bearing surfaces come into contact, or the surface forces prevent further escape. Such, however, is not the case if the intervening lubricant be plastic, for the nearer the surfaces approach, the less the shearing stresses become, and long before the surfaces can touch they reach the plastic yield-point, and further flow ceases.

In fig. 45 are shown the experimentally ascertained curves of shear for plastic clay. Here the surfaces AB and CD are approaching each other without tangential motion. The curves showing the conditions of distortion will be seen to differ remarkably from those of a viscous fluid, which take the form of parabolas (fig. 47, p. 99).

Unfortunately, there is very little experimental data to guide us here,

---

[1] *Theory of Heat*, p. 303 (1894 edition).

except such as is furnished by the actual working of vehicles lubricated by greases. This aspect of the question can be more satisfactorily discussed when we come to deal with the theory of lubrication, for, as we have pointed out, the actual resistance to motion offered by oil and grease films depends upon their thickness, area, and the temperature produced by the friction, as well as upon the absolute viscosity or plasticity.

Many of the greases used for lubricating purposes are mixtures of soft solids and viscous oils or soaps. On standing, the oils sometimes separate out from the solids as minute globules, suspended in a solid matrix. When kneaded, however, the oil is spread out and forms continuous films, which much reduce the resistance to shear.

CHAPTER V.

THE THEORY OF VISCOUS LUBRICATION.

Lubrication and Friction. —*Lubrication of Surfaces.*—In Chapter III. the subject of solid friction has been dealt with in some detail, and it was pointed out that unless solid surfaces be contaminated by oily lubricants they generally seize and abrade each other, even under very small loads. Such spontaneously contaminated surfaces, from the engineer's point of view, cannot properly be called lubricated surfaces, for the adsorbed films are not necessarily formed of good lubricants, and the coefficient of friction may be high.

Adsorbed films of oily lubricants serve a very important purpose, for they protect the rubbing surfaces from injury when there is no viscous film between them, and enable metals which would otherwise seize to work satisfactorily together at moderate speeds and pressures.

In the case of viscous lubrication, with which we shall deal in this chapter, the bearings are entirely separated by a comparatively thick film of oil, they do not touch, and the friction is wholly due to the viscosity of the oil. Here the action of the lubricant is not due to its property as a slippery substance. Indeed, it is not a case of true lubrication, for the brass of a wagon, for example, rests upon a film of oil which is forced in between the brass and journal by the rotation of the latter. To recapitulate, in the case of viscous lubrication, the solid surfaces are wholly separated from each other, and the friction depends upon the thickness of the lubricating film, the area of the surfaces in contact, their relative velocities, and the viscosity of the lubricant.

We, therefore, have two kinds of lubrication, one in which the surfaces are covered by adsorbed films only, and a second where there is a thick film of oil between them, the one being known as solid film or boundary lubrication and the other as viscous or " perfect " lubrication. As almost every bearing in heavy machines has to deal with both kinds of lubrication, the lubricant used must be an oily one, as well as having the proper viscosity.

Objects of Lubrication.—In the design of machinery, the engineer seldom has to deal with unlubricated rubbing surfaces. His object is the transference of energy, and its utilisation at some particular place with as little loss as possible. In effecting this, the relatively moving surfaces are often pressed together with considerable force and have to slide over each other at high velocities. Unless such surfaces be kept apart by the interposition of a liquid film or lubricant, the frictional losses will be great, and the wear and tear of the surfaces, in most instances, proportionally serious. Indeed, were it not for the properties certain liquids and soft solids possess of keeping the relatively moving surfaces apart, and thereby very greatly reducing the frictional resistances between them, it would be impossible to carry on many most important manufacturing processes, or to move vehicles at anything like railway speed.

Frictional Losses.—It has been estimated[1] that the total horse-power of

---

[1] Lectures given before the Bradford Engineering Society, by Prof. G. F. Charnock, Nov. and Dec. 1905, p. 1.

all the steam engines at work in the United Kingdom in 1905 was not less than ten millions, and that considerably more than half this enormous amount was consumed in overcoming friction. Prof. Charnock says: "It is truly remarkable that of the many details in connection with machinery, none receives less attention than the reduction of friction and the proper lubrication of bearings. With a constant striving after the reduction of steam consumption per indicated horse-power, little thought is bestowed on the relation of indicated horse-power to the useful work done. Taking a good engine working at full power, from 6 to 8 per cent., and at quarter power, from 24 to 32 per cent., of the total power developed is wasted in friction of the main bearings. In many mills fitted with first-class arrangements for transmitting power, to drive the shafting alone requires from 20 to 30 per cent. of the useful work done by the engine, and no doubt in many cases this is greatly exceeded. Very little indeed is known of the power required to overcome the friction of various classes of machinery used in mills and factories, but it is safe to say that the work usefully expended in the actual operations which the machinery is intended to perform must be an exceedingly minute fraction of the power developed by the steam engine in the first place. It is evident that there is much room for progress in the direction of the reduction of avoidable sources of loss by more careful attention to the laws of friction, and to more scientific methods of lubrication."

In this connection Prof. J. Goodman[1] has also remarked that "out of every ton of fuel consumed for engine purposes, some 400 to 800 lbs. are wasted in overcoming the friction of the working parts of the motor, and further, every machine driven by a motor also wastes a large percentage of the remaining power by its own friction. One would not be far short of the mark in saying that from 40 to 80 per cent. of the fuel is consumed in overcoming friction. This extremely wasteful state of affairs is most unsatisfactory, and happily can be greatly improved by a due observance of the laws of friction and lubrication."

The full benefit derivable from efficient lubrication could seldom be taken advantage of until recently, for bearings as formerly constructed could not be perfectly lubricated without involving a great waste of oil. But now that the mechanical problems to be solved have become better known, such defects can be, and have been to a great extent, remedied in modern machines.

Theory of Viscous Lubrication.—Until recently, the engineer had to be guided almost wholly by experience in the design of bearing surfaces and the methods of their lubrication, the theory of viscous lubrication, or the action of viscous or plastic substances in diminishing friction between relatively moving solids, having received little attention. Not that experimental investigations had been neglected; as a matter of fact a vast amount of experimental data had been collected; the results, however, not only failed to agree with each other, but they also failed to agree with the general experience of engineers concerning the frictional resistances of machinery.

The theory of high-speed lubrication is based upon the supposition that a lubricant acts in virtue of its viscosity and density, physical properties which cause the fluid lubricant to insinuate itself between the relatively moving surfaces and force them apart. Such lubricants, however, offer considerable resistance to shear, and at high speeds it is this resistance which mainly occasions the friction of the bearing. The value of this resistance depends upon the viscosity of the lubricant, the relative speed of the surfaces, their area and inclination to each other, and also upon the mean thickness of the lubricating

---

[1] Paper read before the Manchester Association of Engineers, March 1890.

film. When these conditions are known, the resistance offered to the relative motion of the surfaces can, very approximately, be calculated.

The different results obtained by different observers arise from the varying methods of lubrication adopted, the many forms of bearing experimented with, and the speeds of rubbing. In the majority of instances, the experimental methods adopted were such that solid as well as liquid friction was encountered. It was not until a form of bearing and a method of lubrication were adopted which gave fluid friction only, that the laws governing the viscous resistance of lubricants were discovered. With each improvement in the experimental methods adopted, the frictional results agreed better with hydrodynamical theory, and practically complete agreement was finally reached.

History of the Theory.—Rennie,[1] in 1828, made a large number of experiments on the friction of various substances against each other, both with and without lubrication. He states "that the diminution of friction by unguents is as the nature of the unguents, without reference to the surfaces moving over them." His experiments were made at comparatively low speeds.

Rankine,[2] in 1870, stated that smooth, firm surfaces of any kind may be greased or lubricated to such an extent that the friction depends mainly upon the continued supply of unguent, and not sensibly upon the nature of the solid surfaces; and he considered that this ought always to be the case in machinery.

Thurston,[3] in 1879, concluded that the load, in the case of well-lubricated bearings, was carried by an oil film under pressure, and that the more viscous the lubricant the greater the load the bearing would carry. He also found that the more viscous the lubricant, the greater was the friction of the bearing.

Pétroff,[4] in 1883, after analysing very carefully all the experimental data to hand, also concluded that the frictional resistance of a properly lubricated bearing was due to the resistance which the lubricating film offered to shear, and considered that, with further knowledge, satisfactory equations might be constructed connecting the force of friction with viscosity, etc.; but he found that it was not possible to do so then. Soon afterwards, in 1885, Pétroff[5] published the results of further experiments. He then gave the following equation for the resistance of a bearing to motion. His terms for slip at the margin are omitted for reasons given on pp. 81 and 82.

$$F = \frac{v\eta ab}{r_0}.$$

With regard to it Pétroff says: "The equation shows that the mediate friction would be independent of the pressure if the thickness of the film were not a function of the pressure"; and, from his own as well as the experimental results of others, he concluded that the resistance of a bearing was proportional to the square root of the load, and also that the pressure of the oil film varied only slightly at different points. He likewise endeavoured to show that the frictional resistance was proportional to the viscosity of the oil, but did not obtain a very close agreement between practice and theory.

His experiments were made with grooves and oil holes in the bearing brasses, and he used ordinary lubrication methods. On this account he failed to get a properly formed oil film and liquid friction only.

---

[1] *Phil. Trans.*, 1829, p. 170.
[2] *The Steam Engine*, 1st edition, 1870, p. 16.
[3] *Friction and Lost Work*, 1879, p. 44.
[4] *Journal des Ingénieurs*, 1883, Nos. 1, 2, and 3.
[5] *Imp. Russian Academy of Sciences, St Petersburg.*

Beauchamp Tower,[1] in 1883, conducted, on behalf of the Institution of Mechanical Engineers, a number of experiments on the friction of cylindrical bearings. He proved that a great deal depends upon the way in which the lubricant is applied to the bearing, the friction varying with the quantity and uniformity of distribution of the oil, as well as with the form of the bearing, speed, etc. Most of his recorded experiments were made in such a manner that the lubrication was "perfect"; *i.e.* the bearing was flooded with oil. He found that, with journals, the friction was independent of the load, and he measured, by means of a pressure gauge, the pressure of the oil film at various points of the bearing, and found that the oil pressure varied very greatly indeed at different points. He also conducted his experiments at a fixed temperature of 90° F. The results were comparable with each other, agreed well with the frictional resistances met with in such complex machines as steam engines, and were also in agreement with hydrodynamical theory.

The application of hydrodynamical equations to circumstances similar, in so far as they were known, to those of Tower's experiments, led to an equation between the variation of pressure over the surface and the velocity, which equation appeared to explain the existence of the film of oil at high pressure. This equation was mentioned by Osborne Reynolds in a paper read before the British Association at Montreal in 1884. It also appears that Rayleigh and Stokes had simultaneously arrived at a similar result. Subsequently Reynolds [2] transformed the equation so that it could be approximately integrated. He found that, in the case of cylindrical journals, the oil film was, approximately, of the same average thickness with all the loads which did not result in seizing, even at moderate speeds. This explained Tower's experimental results, which proved the friction to be independent of the load under many conditions. Reynolds calculated the pressure of the oil film at various parts of the film, and found that they agreed closely with the experimental results obtained by Tower. Reynolds also showed that the reason why the friction was not proportional to the speed was that, although the bearing was maintained at a constant temperature of 90° F., the oil film had a temperature above that of the bearing, which increased with the speed and varied its viscosity.

Tower,[3] in his experiments, showed that well-lubricated parallel surfaces, when moderately loaded, also became separated by an oil film.

Tower made his experiments on journal friction with a machine in which the brass rested on the journal, but only covered a portion of the circumference. More recently, J. E. Stanton [4] has repeated these experiments, using a spindle fitting loosely in a bush. The spindle had a diameter of 1·00 inch, and the bush 1·02 inch. This is a very large clearance; but it was found quite practicable to experiment with, as the pressure film then only occupied a small part of the circumference of the journal. With very small clearances pressure conditions would be set up round the complete bush, but all attempts to obtain comparable results under these conditions failed, for the reason, apparently, that it was not possible to prevent rupture of the film on the lower half of the bush, when the pressure was less than an atmosphere, by an inflow of air or oil from the ends of the bearing.

The mathematical treatment of the problems involved in the study of viscous lubrication are far too intricate and difficult to be considered here in

---

[1] *Proc. Inst. Mech. Eng.*, 1883, p. 632.
[2] *Phil. Trans.*, 1886, p. 160.
[3] *Proc. Inst. Mech. Eng.*, 1891, p. 111.
[4] *Ibid.*, ii. (1922), pp. 1117–1445.

detail. Readers are referred to Reynolds,[1] Sommerfeld,[2] Harrison,[3] Michell,[4] Pétroff, and others. The subject has also been dealt with by Stanton.[5]

Bearing surfaces are of various shapes, the most common being cylindrical; often, however, they are true planes; but whether cylindrical or flat, the opposing surfaces, when working, are seldom quite parallel to each other. In discussing the theory of viscous lubrication the subject will be treated under two heads, viz. moderate-speed lubrication and high-speed lubrication. This order of treatment is convenient, as at high speeds the efficiency of the bearing depends very greatly upon the shape of the surfaces and the free supply of the lubricant. Such is not the case to the same extent with moderate speeds.

Moderate-Speed Lubrication.—*Influence of the Nature and Condition of the Friction Surfaces.*—At high speeds we shall find that with suitably designed bearings the lubricant is forced in relatively large volume between the moving surfaces, owing to their inclination the one to the other, and as it cannot escape freely, the surfaces may remain completely separated by a viscous film. At low or moderate speeds with ordinary loads this is not the case, and if the load be too great, the lubricant deficient in oiliness, or the rubbing surfaces made of unsuitable materials, there is a danger of so cutting and tearing the bearings that they will run hot. The unctuousness of the surfaces as well as the oiliness of the lubricant are, indeed, of great importance in almost all cases, for machines have generally to be started from rest with considerable loads on the bearings, or run at moderate speeds at times. This is especially the case with the axles of railway vehicles, the journals of which require careful lubrication and adequate bearing surfaces; for endurance and a low coefficient of friction are of paramount importance at low speeds. The friction of turn table centres, of the motion pins of slow-running engines, etc., and indeed of the rubbing surfaces of all kinds of slowly moving machinery is largely dependent upon the unctuousness of such surfaces, and upon the greasiness or oiliness of the lubricant used, its viscosity, and the rate at which the viscosity decreases with rise of temperature.

Although a truly smooth bearing surface is smooth down to molecular dimensions, and is comparable with the surface of clean mercury, it may not be truly plane, and two such surfaces will touch each other at a few points only, the intervening spaces being occupied by a viscous film of the lubricant. It must be remembered that the whole of the surface areas are covered by an adsorbed film, and that the intervening spaces are occupied by a thicker film of the lubricant. The adsorbed film itself is in a solid condition, the molecules forming it being attached to the surfaces by their chemically most active ends, leaving the least active ends to form the outer surface of the film. Upon this outer surface other molecules may orient themselves. We thus have on each friction surface a primary adsorbed film, covered more or less deeply by an oriented layer in the condition of a soft solid. When the surfaces are not truly plane, at the points of contact abrasion may occur, often without serious results, for the liberated heat can, in most cases, pass freely away, and the lubricating film is not permanently broken. Should, however, the materials forming the bearing surfaces be such that when forced into contact they readily weld together, the lubricant may be displaced, and large areas of the surfaces

---

[1] *Phil. Trans. Roy. Soc.*, 1886, pt. i., p. 194.

[2] *Zeitschrift für Mathematik*, Leipzig, 1904, p. 97.

[3] *Trans. Cambridge Philosophical Society*, 1913, xxii.

[4] *Zeitschrift für Mathematik*, lii. (1905).

[5] Article, "Friction," by J. E. Stanton, in Glazebrook's *Dictionary of Applied Physics*, i. 341–404.

may eventually seize. Therefore, although at all ordinary running speeds the friction depends almost wholly upon the viscous film drawn in by the relative movement of the surfaces, and very little upon the adsorbed films formed by the lubricant on the bearing surfaces, it cannot be too clearly understood that, at low speeds and with heavy loads, the adsorbed film may be displaced, and so much injury may be done by the low speeds met with after starting that the surface may be destroyed. To ensure a sufficiently accurate plane surface it is the custom to run all machines at moderate speeds with light loads when new, so as to wear and press down all irregularities, and thus ensure accurately plane or curved surfaces, as well as highly polished ones, before normal conditions of running are allowed.

The effects at low speeds are practically the same whether the surfaces be plane, cylindrical, or of double curvature; for in all cases the laws of low-speed friction differ from those of high-speed friction, the one being *solid friction* and the other *viscous friction*. Very frequently, as a result of the loads and speeds used, the actual frictional results obtained are due to both kinds of friction. The Lanchester worm-gear may be instanced as a case in point.

The great frictional resistance met with at low speeds is well known to all who have noticed heavy machinery running slowly, or who have seen hydraulic pumping engines start from rest. In the latter case, from the moment the engine commences to move it has to deal with the full load on all its bearings. In consequence of this, all the faces are firmly pressed together. and the lubricating film, especially if it be a mineral oil, is not sufficiently oily to prevent even the minute irregularities of the surfaces from interlocking somewhat, and the bearings often "groan" and the parts move by jerks. But as the speed increases this jerky motion decreases, the machinery "groans" less and less, and finally moves easily and noiselessly, the viscous film having formed. At the lower speed, the lubrication is by adsorbed film and the lubrication is imperfect, but by the time the relative speeds of the rubbing surfaces have reached 10 or 20 feet per minute, comparatively thick viscous films of oil have been thrust, by the relative motion of the parts, between the surfaces, and the lubrication becomes "perfect."

Influence of the Viscosity and Oiliness of the Lubricant.—At low speeds, especially under heavy loads, marked oiliness as well as considerable viscosity are of great importance; for very viscous oils form viscous films more readily than do thin oils. Although viscosity and oiliness are distinct characteristics of lubricants, they are closely related; for, as Hardy has shown in his experiments with pure chemical substances (see Chapter III.), the increasing viscosity and decreasing friction of the propionic series of organic acids with increasing atomic weight is very striking. Formic and acetic acid are exceptions in this series, as also are their threshold frictions. In general, the viscosity of chemical series, such as the paraffins and related acids and alcohols, increases with higher atomic weight, whilst the threshold frictions and densities decrease.

Influence of the Method of Lubrication.—Friction is much less dependent upon the method of lubrication at low speeds for its magnitude than at higher speeds; indeed, with a short chord of bearing surface, and therefore with heavy loads per square inch, the friction is approximately the same whether the pad, oil bath, or other system of lubrication be adopted. With less heavy loads the friction is more variable.

The results obtained by Goodman[1] are shown in Table XXVI.

In Table XXVIII., which will be fully described later, the value of a certain constant, C, leads to the belief that, as in the case of cylindrical surfaces, the lubrication of plane surfaces is also imperfect at low speeds and with heavy

---

[1] *Friction and Lubrication of Cylindrical Journals* (pamphlet), 1890, p. 133.

loads. When the value of C ceases to vary, the pressure film has most probably established itself.

At a mean speed of about 60 feet per minute, and with greater loads than 60 lbs. per square inch, the pressure film is partly *crushed* out and the friction becomes abnormally great, as shown by the large and increasing value of C.

TABLE XXVI.—FRICTIONAL RESISTANCES AT A SPEED OF 7·8 FEET PER MINUTE.

System of Lubrication	Length of Chord of Bearing Surface (inches).				
	2·0	1·75	1·5	1·0	0·5
	Mean Frictional Resistances.				
Oil-bath, . . .	0·92	0·70	0·64	0·48	0·47
Saturated pad, . .	1·13	0·92	0·72	0·48	0·16
Oily pad, . . .	1·87	1·25	0·94	0·57	0·51

At 90 feet per minute, even 160 lbs. per square inch is satisfactorily carried, but at speeds below 13 feet per minute, even with 20 lbs. per square inch, the pressure film is not properly formed and the friction is high.

In the case of a journal the high coefficient of friction at low speeds is also very striking, especially when the load per square inch is considerable. Table XXVII. shows the changes in the value of μ, with increasing speed when the pressure is 50 lbs., 75 lbs., and 150 lbs. per square inch, and the journal is flooded with the lubricant. With the smaller load, even at such a speed as 10 feet per minute, the coefficient of friction is small. At 75 lbs. per square

TABLE XXVII.*—CHANGES IN VALUE OF THE COEFFICIENT OF FRICTION WITH INCREASING SPEED.

SPEED Feet per Minute.	Coefficients of Friction (μ_1) under a pressure of		
	50 lbs per sq in.	75 lbs. per sq in.	150 lbs. per sq in.
5	...	·0025	·1145
10	·0009	·0007	·0250
15	·0012	·0008	·0051
20	·0014	·0009	·0034
25	·0017	·0011	·0027
30	·0021	·0013	·0023
40	·0026	·0016	·0019
50	·0032	·0018	·0017
70	·0042	·0024	·0017
90	·0053	·0030	·0020
110	·0064	·0036	·0024
130	·0075	·0042	·0029
150	·0086	·0048	·0035
170	·0096	·0054	·0041
190	·0106	·0060	·0047

* These figures have been obtained by plotting the values given in Goodman's tables.

inch the friction is at a minimum between 5 and 10 feet per minute, whilst at 150 lbs. per square inch the minimum frictional resistance is not reached until a speed of about 40 feet per minute is attained. In other words, the lubrication, except with small loads, is imperfect at low speeds, a high speed being required to form a sustaining liquid pressure film.

High-Speed Lubrication.—*The Pressure Film.*—At a speed depending greatly upon the load, the nature of the lubricant, and the inclination of the rubbing surfaces, the latter commence to separate, and a comparatively thick *pressure film* forms between them and carries the load. The extent to which this film increases in thickness with the speed varies not only according to the load, the viscosity of the lubricant, the area of the bearing, and the speed, but also according to the shape of the surfaces and the relative positions they assume. As illustrations of the conditions under which pressure films are produced, and those which determine their thickness, it will be convenient first to consider the case of parallel plane surfaces, then of plane surfaces inclined to each other, and finally of cylindrical surfaces such as those of journals.

Lubrication of Parallel Plane Surfaces.[1]—Although neither a very common form of bearing nor one that will carry very great loads, the conditions which obtain when parallel plane surfaces are pressed together, and caused to slide over each other, are of considerable interest, for the laws which govern the frictional resistance in such cases serve to illustrate very clearly the mode in which viscous substances reduce the friction between relatively moving bodies.

The subject was one that engaged the close attention of Beauchamp Tower. Indeed, had it not been for his experimental work, to which reference has already been made, we should have been without the data upon which to found a hydro-dynamical theory. Of the experiments made by Tower, those on pivot friction have most bearing upon the subject in hand.

In these experiments, faces which were free to move to or from each other were maintained parallel. The pivot experimented with was made of steel, had a perfectly flat end 3 inches in diameter, and was pressed against a manganese bronze bearing in such a manner that the faces, although they could separate, were always parallel to one another. The exact form of bearing and the details of the machine employed are given on p. 427. The lubricant was supplied through a hole in the centre of the bearing, and was distributed by two radial grooves extending from the central hole to within $\frac{1}{16}$ of an inch of the periphery of the bearing surface. In this way the bearing was always kept flooded with oil, which remained clean and bright during the experiments, indicating that no abrasive action was taking place. In other words, the lubrication was "perfect"; *i.e.* there was a comparatively thick film of oil maintained under pressure between the surfaces, which were thus prevented from touching each other. To the viscous action of this oil film the friction was wholly due, being smaller the thicker the film, and greater the higher the speed. However, with each change of speed or load a corresponding change in the thickness of the film, and therefore of the frictional resistance, took place.

Fig. 46 illustrates the action of such a film. It shows two parallel planes of unlimited length and breadth separated by a viscous film of thickness r_0. The upper plane CD is supposed to be *fixed*, while the lower plane AB moves in the direction of the arrow with a velocity v_1. By the definition of viscosity (p. 75) there will be a tangential resistance to motion

$$f=\eta\frac{v_1}{r_0} \quad . \quad . \quad . \quad . \quad . \quad . \quad . \quad (1)$$

---

[1] Deeley and Wolff, *The Engineer*, 10th January 1896, p. 25.

η being the viscosity of the liquid. When one plane has an area A, the total resistance to motion

$$F=\eta\frac{v_1 A}{r_0} \quad . \quad . \quad . \quad . \quad . \quad . \quad . \qquad (2)$$

The tangential motion varies uniformly from v_1 at AB to *nil* at CD. Thus, if the length FG be taken to represent v_1, then the length of the line PN will represent the velocity at P.

When first the planes are set in motion, the inertia of the viscous liquid prevents it from at once assuming this condition of flow, but in a comparatively short period all irregularities of motion subside, and the velocity of the liquid at any plane is strictly proportional to its distance from CD.

Inertia effects also show themselves when one plane is of finite extent, but they then tend to throw the surfaces apart and maintain a film of the liquid between them.

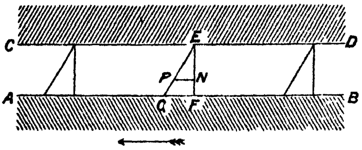

FIG. 46.

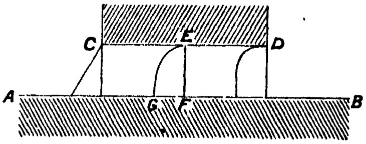

FIG. 46A.

In fig. 46A the surface CD is supposed to be of limited length, both parallel with and in a direction perpendicular to the paper. AB is flooded with oil, which when approaching, but at some distance from D, is moving at the speed v_1 of the plane AB. Just before reaching D, a relative motion or distortion of the fluid is produced. At D the oil in actual contact with the fixed plane is at rest, and the remainder, instead of passing along between the surfaces in such a manner that the *rate* of distortion is everywhere the same, as in fig. 46, is caused by its own inertia to enter the space between the planes, and to flow in such a way that—as shown in fig. 46A—the rate of distortion becomes much greater near the plane CD than near the plane AB; whilst, at the end C, the rate of distortion of the lubricant, in virtue of its viscosity, may have become approximately the same at all planes. Under these conditions, therefore, the line EG is curved, the rate of distortion is greater near CD than near AB, and the volumes passed at each section are proportional to the areas enclosed by EFG. It will be noticed that these areas are larger at the entrance D than at the exit C, part of the excess of liquid escaping laterally, owing to the comparatively small width of the plane CD in a direction perpendicular to the surface of the paper. When the velocity with which the lower plane moves is very small, the volume carried in between the surfaces is nearly proportional to $\frac{EF \cdot GF}{2}$, and at the opposite end of the plane the same volume is carried out; but as the speed increases, the volume introduced may exceed the volume carried out at C by an amount almost proportional to

$$EF \cdot GF - \frac{EF \cdot GF}{2} = \frac{EF \cdot GF}{2},$$

at which the excess remains unaltered, however much the speed may be increased.

When the planes are of considerable area, and are close together, the viscosity of the oil powerfully resists its escape at all points, and at the same time, by tending to make the rates of distortion everywhere equal, causes it to accumulate and force the planes apart until the forces are in equilibrium. This action is going on at all points between the surfaces when their length, measured in the direction of motion, is not very great. The force tending to throw the planes apart is, therefore, distributed over them much as is the force resisting the approach of two surfaces separated by a viscous medium.

In this way, when the opposing surfaces are kept parallel, a pressure film is maintained between them, and a considerable load may be supported by CD, so long as AB is in rapid motion. The resistance to the motion of the lower plane is then due wholly to the viscosity of the liquid film. It is, however, somewhat in excess of the value obtained by the formula $F=\eta\cdot\frac{v_1 A}{r_0}$, for owing to the excess of oil introduced at D, the conditions of motion are not exactly those shown in fig. 46. No correction for this small difference will be attempted.

We will in the first place deal with the conditions determining the volume V, introduced owing to the relative motion of the surfaces and the density of the liquid. The viscous liquid resting upon AB at points distant from the surface CD is moving with a velocity v_1. At the point D, when the velocity is considerable, the liquid is *thrown* against the opening between the surfaces, much in the same way as water from the combining cone of an injector is thrown against the orifice of the delivery cone. Its power of entering the opening may be regarded as proportional to the density of the liquid and to the square of the velocity. It is almost independent of the viscosity; for the entrance of the liquid is as much opposed by its adherence to CD as it is assisted by its adherence to AB.

No doubt, at low speeds, as the load urging the faces together is increased, the volume entering decreases more rapidly than does the distance separating the rubbing surfaces, until finally the marginal pressure of the imprisoned film prevents the liquid from entering at all, and the faces close together; but when the speed is great and the load is increased, there is reason to suppose that the liquid fails quite suddenly to get between the surfaces, which thereupon "seize." We may therefore assume that, except at low speeds, the volume entering is approximately proportional to

$$v_1 r_0 b = V,$$

r_0 being the distance between the surfaces, and b the length of the orifice at D.

In the case of a rectangular bearing, the viscous liquid is introduced along one side and escapes along the margin of the other three, and the larger the volume introduced, the more the bearing surfaces part in order to allow it to escape.

The conditions attending the escape of the fluid may, therefore, be well illustrated by taking the case of parallel surfaces approaching each other without tangential motion (fig. 47).[1] The fluid has to be *squeezed out* from between the surfaces, and since there is no motion of the fluid in contact with the surfaces, the horizontal velocity will be greatest half way between them, nothing at O (the middle of CD), and greatest at the ends. This is for planes of infinite length in a direction perpendicular to the plane of the paper. If in a certain state of motion—shown

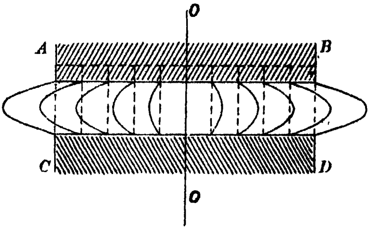

FIG. 47.

---

[1] Osborne Reynolds, *Phil. Trans.*, 1886, p. 173.

by the dotted lines in fig. 47 the space between AB and CD be divided into ten equal parts by vertical lines, and if those lines be supposed to move with the fluid, they will shortly after assume the positions on the curved lines, in which the areas included between each pair of curved lines is the same as in the dotted figure. If it were not for the inertia of the fluid, the lines would be absolute, instead of approximate, parabolas. It can be at once seen that the curved lines indicate the rates of distortion at different points, and. as force is required to maintain the rate of distortion at each plane constant, a vertical pressure W must be applied to force the liquid out. The pressure will be greatest at O, and will fall off towards the ends C and D.

In the case of an ellipse of semi-axes a and b, it follows from Osborne Reynolds' equations that the velocity of normal approach is proportional to

$$\frac{r_0^3 W(a^2+b^2)}{a^3 b^3 \eta}.$$

Therefore, the escaping volume may be written

$$V_1 = k\frac{r_0^3 W(a^2+b^2)}{a^2 b^2 \eta} \quad . \quad . \quad . \quad . \quad . \tag{3}$$

We thus obtain expressions for the volume V of the viscous liquid introduced by the motion of the bearing, and also for the motion V_1 of the liquid pressed out by the weight on the brass. In order that the conditions of flow may remain constant, these two values must be equal, consequently

$$V = V_1 \quad . \quad . \quad . \quad . \quad . \quad . \quad . \tag{4}$$

$$= v_1 r_0 b = k_1 \frac{r_0^3 W(a^2+b^2)}{a^2 b^3 \eta} \quad . \quad . \quad . \tag{5}$$

and

$$v_1 = k_1 \frac{r_0^2 W(a^2+b^2)}{a^2 b^3 \eta} \quad . \quad . \quad . \quad . \quad . \tag{6}$$

Therefore,

$$\frac{v_1^2 \eta^2 a^2 b^2}{r_0^2} = k_1 \frac{v_1 W(a^2+b^2)\eta}{b} \quad . \quad . \quad . \quad . \quad . \tag{7}$$

The left-hand term of this equation gives us the value of F^2 required to maintain the plates in steady motion, since F (equation 5 on p. 75) is inversely proportional to r_0 and directly proportional to $v_1 \eta a$.

$$\therefore \ F \propto \sqrt{\frac{v_1 W(a^2+b^2)\eta}{b}} \quad . \quad . \quad . \quad . \quad . \tag{8}$$

which, in the case of a circle, when $b = a$, resolves itself into

$$F \propto \sqrt{v_1 W b \eta} \quad . \quad . \quad . \quad . \quad . \quad . \tag{9}$$

and, as the coefficient of friction (μ_1) is equal to the resistance F divided by the total load,

$$\mu_1 = \frac{F}{W} = c\sqrt{\frac{v_1 \eta b}{W}} \quad . \quad . \quad . \quad . \quad . \quad . \tag{10}$$

The values of F and the coefficient of friction will, therefore, vary with the shape of the surface boundary, but will be constant for surfaces of similar shapes. Hence, in the case of the circle, ellipse, and rectangle, we see that, the proportions being unaltered and the premises correct, the friction varies as the fourth root of the area of the surfaces.

Experiment appears to bear out this statement, for it has been found that the coefficient of friction of a pivot or plane surface is affected much less by the size of the bearing than by the velocity at which it runs or by the load which it carries, the pressure film being unbroken.

Although in Tower's experiments every care was taken to measure the friction between the surfaces, and to keep them in good condition, no attempt was made to ascertain the rise of temperature produced by different speeds and loads, or the value of the viscosity of the oil used. Some resistance to motion must also have been offered by the oil film surrounding the cylindrical portion of the footstep, but as the clearance is not given, and we do not know the viscosity of the oil, its magnitude cannot be calculated.

We are consequently unable to compare one experimental result quite satisfactorily with another.

Assuming that the oil did not vary very much during the trials, and that the cylindrical footstep was a moderately loose fit in the brass, we may write from (10),

$$C=F\sqrt{\frac{1}{NW}} \quad . \quad . \quad . \quad . \quad . \quad (11)$$

N being the number of revolutions of the footstep, and C a constant.

In Table XXVIII. are given the values of C, calculated from Tower's experimental results, the mean speeds of the footstep, the loads, and the frictional resistances. At low speeds C has a high value which increases steadily as the load increases, showing that the volume of oil entering is not proportional to EF . GF, and is not keeping the surfaces properly apart. At higher speeds, however, C actually decreases somewhat, until the heaviest loads are reached. The decrease is probably brought about by the heating effect decreasing the viscosity of the lubricant, or by the fact that the force measured in the experiments was partly due to the viscous resistance of the oil film surrounding the cylindrical portion of the footstep. In all cases the highest loads cause a small increase in the value of C, in spite of the fact that the viscosity of the lubricant must have been lowered by the heat generated by friction. Under these conditions the film would be thin, and the volume of the liquid introduced by its inertia somewhat less than when r_0 is large.

TABLE XXVIII.—VALUES OF "C" FROM BEAUCHAMP TOWER'S EXPERIMENTS.

Load.	50 Revs. per min.		128 Revs. per min		194 Revs. per min.		290 Revs. per min.		353 Revs. per min.	
	13·09 feet per min.		33 51 feet per min.		58·28 feet per min.		75·08 feet per min.		92·41 feet per min.	
Lbs. per sq. in.	Inch-lbs.	C.	Inch-lbs.	C.	Inch-lbs.	C.	Inch-lbs.	C.	Inch-lbs.	C.
20	2·77	·087	1·13	·0223	1·44	·0231	2·51	·0294	2·36	·0281
40	4·61	·103	1·54	·0215	1·74	·0197	3·03	·0282	2·72	·0229
60	7·07	·129	2·26	·0258	2·15	·0199	3·33	·0252	3·08	·0212
80	10·25	·162	3·59	·0355	2·56	·0206	3·64	·0239	3·59	·0214
100	15·48	·218	5·48	·0484	3·13	·0225	3·95	·0232	4·00	·0213
120	18·72	·241	7·02	·0566	4·41	·0289	4·10	·0219	4·51	·0219
140	..	..	9·23	·0690	6·10	·0370	4·51	·0224	5·23	·0235
160	..	..	12·82	·0897	7·69	·0427	5·03	·0233	6·15	·0252

If the reasoning upon which this hypothesis of footstep friction is based be correct, then it is clear that the area of high pressure in the viscous film will not extend far inwards from the "on" edge of the bearing. There should, therefore, be quite a number of oil grooves in the face, so as to secure the greatest possible load-carrying power.

We have referred to inertia as the cause of the entrance of the large volume of oil entering on the " on " side as compared with the normal conditions of flow on the " off " side (fig. 46). However, the volume entering at D will be partly due to the viscosity of the oil in front of the " on " side.

Referring to the ordinary parallel form of thrust bearing, S. Z. de Ferranti [1] states that a non-pivoted or plane surface cut up by oilways worked perfectly well, provided pains were not taken to rub the oil off the surface. With grooves at very short intervals it was not at all surprising that the method worked perfectly well. Ferranti had worked up to pressures of only 100 lbs. per square inch, because he was afraid of the white metal surfaces giving way, and had obtained coefficients of friction as low as the best that had been referred to with inclined bearings.

Although plane parallel bearings will carry considerable loads, as is evidenced by the working of propeller thrust-blocks for marine work, and the many pivot bearings which have done such good work in the past, such bearings are more troublesome to use and often give rather high coefficients of friction. Attention has, therefore, been concentrated upon the design of pivot bearings the faces of which are inclined to each other, as we shall see they always are in the case of cylindrical bearings.

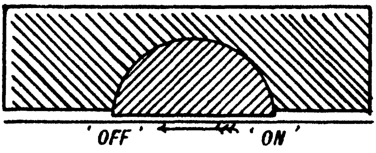

FIG. 48.

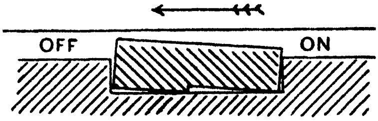

FIG. 49.

Lubrication of Inclined Plane Surfaces. It has been shown (p. 98) that when two parallel plane surfaces, one of finite length, are caused to move relatively to each other, and a lubricant separates them, a pressure film is formed at the " on " edge, and this tends to throw the surfaces apart. In a pivot bearing, such as that used by Beauchamp Tower, the surfaces must always remain parallel to each other, and the forces tending to separate the surfaces and cause a thick lubricating film to form are not very pronounced. Fig. 48 shows a form of thrust bearing in which the surfaces consist of semi-cylindrical bearing brasses, the flat faces of which rest upon the footstep. When the pressure film forms on the " on " side of the bearing, the brass rotates through a small angle, the flat rubbing face becomes inclined to the surface below, and the lubricant being forced between the inclined surfaces forms a thick oil pad, which gives a low-friction coefficient. A bearing of this kind was fitted for the Midland Railway Co. in February 1905 to a hydro-extractor by R. M. Deeley. At a mean speed of 65 feet per minute, a load of 130 lbs. per square inch, and grease lubrication, the coefficient of friction was 0·01.

The Michell thrust bearing, patented on 16th January 1905, has the loose bearing blocks designed as in fig. 49. Here, unlike the bearing shown in fig. 48, the blocks are stepped on the underside somewhat nearer the " off " than the " on " side, and the rubbing surfaces incline themselves to each other as shown.

Some experiments on this form of bearing made by A. G. M. Michell [2] gave the frictional results shown in Table XXIX.

---

[1] *Proc. Inst. Civil Engineers*, cxcvi. (1914), p. 253.

[2] *Ibid.*, p. 263.

TABLE XXIX.

Revolutions per min.	Load in lbs. per sq. in.	Coefficient of Friction.
418	1235	0·00095
525	617	0·00084
1350	617	0·00161

The leading dimensions of the bearing used were:—

Diameter of thrust collar	6 inches.
Number of pivoted blocks	2
Area of bearing surface of each block . . .	4·05 sq. inches.
Distance of centre of bearing surface from axis rotation,	2·16 inches.

The pivots of the blocks were approximately $\frac{1}{8}$ inch behind the centres of the bearing surfaces. The oil used was the high flash-point petroleum burning oil known as "mineral colza," of viscosity 0·08 poises at 60° F., and is an oil of far lower viscosity than the thinnest oil ordinarily used for lubrication. Fig. 50 shows the oil pressure distribution.

As a rule, in the case of engine slide-blocks, for example, even when the rubbing surfaces are plane, the opposing surfaces are free to adjust themselves according to the position of the load they carry and the distribution of pressure in the film keeping them apart. The conditions under which the lubricant then acts differ considerably from the case of parallel plane surfaces. In the latter case, it is to the inertia and viscosity of the lubricant that we must attribute the presence of the pressure film; but when the faces are free to become inclined, the liquid much more effectively wedges itself between them and forces them apart. The conditions then obtaining have been carefully considered by Osborne Reynolds and others, and merit close attention, as it is to this action that he ascribes the great carrying power of cylindrical bearings.

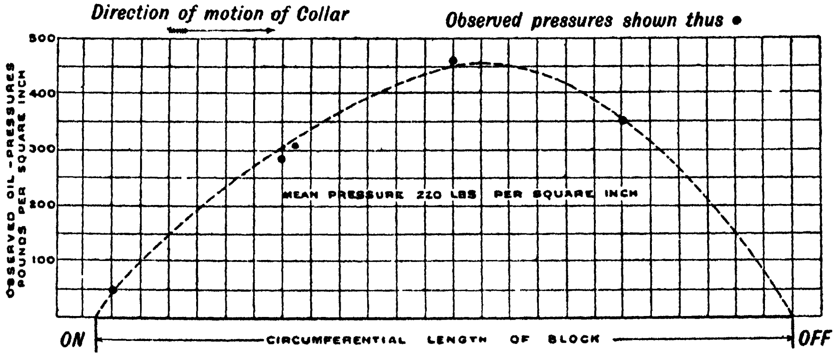

FIG. 50.

As to the frictional resistance and carrying power of plane surfaces, such as engine slide-blocks, which become slightly inclined to each of the faces they run upon, no experimental results have yet been obtained which can be compared as regards accuracy with Beauchamp Tower's tests of pivot bearings.

In fig. 51, AB is a plane surface, of unlimited length and breadth, moving in the direction of the arrow beneath the inclined surface CD, which is of limited length and of very limited breadth, in a direction perpendicular to the paper. Omitting the effects which would be produced by the inertia of the liquid, the conditions of flow are as follows :—

At the lower edge of D, where the liquid enters between the surfaces, the volume introduced is proportional to $\frac{\mathrm{EF}\,.\,\mathrm{GF}}{2}$.

Owing, however, to the inclination of the surfaces, the volume passed out at the edge C is only proportional to $\frac{\mathrm{E_1F_1}\,.\,\mathrm{G_1F_1}}{2}$.

When the surface CD is of considerable area, and the planes are very close together, the excess of oil or other lubricating fluid introduced at the edge D must escape ; but this is opposed at all points by the viscosity of the liquid. The oil, therefore, tends to accumulate, and a pressure is set up which forces the surfaces apart until the load is sufficient to prevent further recession. In this respect, the action is similar to that we have already described as resulting from the inertia of the entering fluid.

According to Osborne Reynolds, the effect reaches a maximum for bearings of such dimensions as are used in practice when EF=2·2 $\mathrm{E_1F_1}$, and owing to the greater freedom with which the lubricant can escape at the end D and the sides near it, the point of maximum pressure p is somewhat nearer C than D. The curve at the top of the figure indicates, approximately, the pressure at different points of such a film, tending to force the surfaces apart. The direction in which the load acts, normal to AB, does not necessarily coincide with p, but with the centre of the area enclosed by the curve and base line of the pressure ordinates.

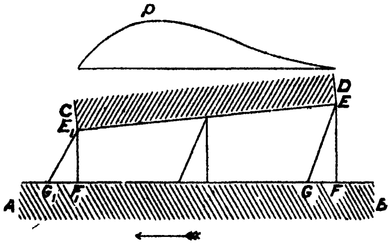

FIG. 51.

The pressure exerted by the film must always be equal to the resultant external force, which, neglecting the obliquity of CD, is perpendicular to AB, and tends to force the surfaces together. When the surfaces are free to assume any position, the pressure of the film, inclination of surfaces, etc., adjust themselves to suit the load and its point of application, and the nearer the surfaces are caused to approach each other the greater is the friction and consequent pressure for the same velocity.

The relations obtaining between the load, pressure, etc., under these circumstances, have been determined by Osborne Reynolds.

In the case of a surface CD of infinite width in a direction perpendicular to the paper he makes

$$v_1=k_1\frac{r_0{}^2\mathrm{W}}{\eta a^3} \quad . \quad . \quad . \quad . \quad . \quad . \quad (12)$$

and the force required to keep them in relative motion,[1]

---

[1] It must be clearly borne in mind that the load carried may be modified very largely by varying the direction in which it acts, for the inclination of the surfaces varies according to the distribution of the pressure, etc. Both in the case of inclined and parallel surfaces inertia effects, previously considered, must show themselves. The wedging and the inertia actions,

$$F = k_1 \frac{\eta a v_1}{r_0} \qquad . \quad . \quad . \quad . \quad . \quad . \quad (13)$$

Therefore.

$$\frac{v_1^2 \eta^2 a^2}{r_0^2} \propto \frac{\eta v_1 W}{a} \qquad . \quad . \quad . \quad . \quad (14)$$

and

$$F \propto \sqrt{\frac{\eta v_1 W}{a}} \qquad . \quad . \quad . \quad . \quad . \quad (15)$$

Lubrication of Cylindrical Surfaces. The cylindrical is by far the most common form of bearing surface, and with it most of the experiments recorded have been made. Pétroff's experiments on journal friction were made under conditions which did not give perfect lubrication. The lubricant was poured into a cylinder, from which it entered a groove cut in the upper brass in the usual manner. On this account the pressure film did not form properly, and the friction was found to be roughly proportional to the square root of the load. Until Beauchamp Tower's results were published, little was really known concerning the effects produced by varying the method of applying the lubricant. He showed that many of the methods in use were very imperfect, the oil holes and ways often cutting across those portions of the surfaces where the pressure of the film should be at its greatest, and allowing the lubricant to escape. With properly shaped brasses resting upon well lubricated journals, he succeeded in obtaining results which were proved by Osborne Reynolds to be in accordance with hydro-dynamical theory. The method of applying the lubricant, and the machine with which he experimented, are described in Chapter X.

A brass which has been running for some time upon a lubricated cylindrical journal wears in such a way that the radius is always slightly greater than that of the journal. When forced into contact, therefore, the brass and journal do not touch over the whole of their surfaces. On the other hand, when the journal is in rapid motion, if the weight on the brass is not too great, the surfaces are separated from each other by a continuous oil film. Fig. 52 represents, in an exaggerated manner, a section through such a brass and journal, the latter being supposed to rotate in the direction shown by the arrow.

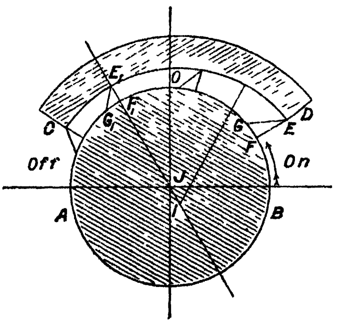

FIG. 52.

The curved surfaces AB and CD have their centres at I and J, a line drawn through which indicates the position of nearest approach E_1F_1. Between EF and E_1F_1 the distance separating the surfaces decreases, the triangle $E_1F_1G_1$ is consequently smaller than EFG, and therefore the lubricant which is brought up by the rotation of the journal and forced into the narrow space between the journal and the brass becomes compressed in its passage forward and tends to force the surfaces apart. On the other hand, as we go from $E_1F_1G_1$ towards C the faces recede, and were it not for the flow of

---

however, as will be seen from equations (14) and (15), have similar effects upon the relationships between the coefficient of friction, the speed, the load, and the viscosity; but the relationships between these values and the area and shape of the bearing do not appear to be *quite* similar. Still it is clear that, as is the case with contaminated and clean surfaces, the coefficient of friction of parallel plane surfaces is only slightly affected by variations in the area of the surfaces in contact.

oil from the portion where the liquid undergoes compression, the pressure might be, and, indeed, sometimes does become, negative.[1]

When there is no load, the conditions are as illustrated in fig. 53. Here the vertical pressures are shown by the curved lines on the top of the figure. On the right-hand or " on " side the pressure is positive, whilst on the left-hand or " off " side it is negative, and the vertical components of these pressures balance each other. On the other hand, the horizontal component of the pressures to the left and right, indicated by the curves at the sides, will both act on the brass to the right, and as these will increase as the surfaces approach, the distance corresponding to JI (fig. 52) must be exactly such that these components balance the resultant friction.

The thickness of the film at different points, and the variations of the position of E_1F_1 with different loads, have been worked out mathematically by Osborne Reynolds, whose exact equations give results which agree very closely with the experimentally ascertained facts. For the full treatment of the subject the original papers should be consulted, as the results only can be given here.

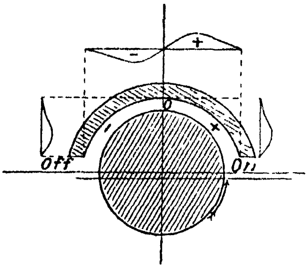

FIG. 53.

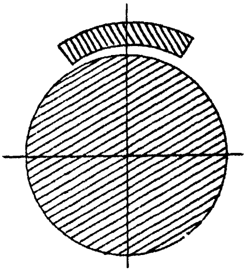

FIG. 54.

Attention may here be called to a feature of the theory of Osborne Reynolds which has not received notice. He observed that to obtain the pressure distribution found by Beauchamp Tower in the viscous pressure film, the radius of the journal must be somewhat less than that of the brass, the point of nearest approach being some little distance from the " off " side, as in fig. 52. However, in the case of a cylindrical journal, as well as that of a flat surface, it is possible to establish a pressure film when the point of nearest approach is at the " off " side of the brass. This condition is shown in fig. 54. Considering that the curvature of the brass is determined by wear when in contact with the journal, we should expect them to be of the *same curvature*. Osborne Reynolds[2] remarks: " It would be extremely interesting to find whether prolonged wear of the brass tends to preserve or destroy the fit. It does appear, however, that the brass expands with an increase of temperature more than the journal, in a very definite manner.

" Another circumstance brought out by the theory, and remarked on by both Lord Rayleigh and the author at Montreal, but not before expected, is that the point of nearest approach of the journal to the brass is not by any means in the line of the load, and, what is still more contrary to common supposition, is on the ' off ' side of the line of load.

---

[1] In the *American Machinist* for 10th September 1903, H. F. Moore states that in conjunction with G. A. Morgan he constructed a small dynamo, in which the bearings entirely surrounded the journal. By simply leading a pipe from a reservoir of oil to that part of the bearing where the pressure would be negative, if anywhere, it was found that the bearing would suck in oil from a reservoir six inches below, and thus lubricate itself.

[2] *Phil. Trans.*, 1886, p. 162.

"This circumstance, the reason for which is rendered perfectly clear by the conditions of equilibrium, at once accounts for a singular phenomenon mentioned by Mr. Tower, viz. that the journal having been run in one direction until the initial tendency to heat had entirely disappeared, on being reversed it immediately began to heat again; but this effect stopped when the process had been often repeated. The fact being that running in one direction the brass had been worn to the journal only on the 'off' side for that direction, so that when the motion was reversed the new 'off' side was like a new brass."

This aspect of the practical side of the theory of viscous film lubrication requires further experimental research; for we do not know to what extent the curvature of the brass as compared with that of the journal varies under different working conditions.

Influence of Load and Speed.—In the case of plane surfaces, whether parallel or inclined, the frictional resistance is proportional to the square root of the load. Cylindrical surfaces, however, owing to their curvature, cannot separate sufficiently, whilst still sustaining a load, to give this result, for when the load is increased E_1F_1 decreases, the lubricant is prevented from escaping on all sides as freely as before, and EF, *i.e.* the distance between the brass and journal on the "on" side, increases. Consequently, as the load is increased, the positive vertical component to the right (fig. 53) increases and overbalances the negative component to the left, which decreases, and E_1F_1, the point of nearest approach, moves to the left until the load reaches a particular value; above this load the point of nearest approach moves back towards O. During this change in the position of E_1F_1, the thickness of the film at different points alters in such a way that the viscous resistance which it offers to the motion of the journal remains nearly constant; and *the friction of journals is, therefore, practically independent of the load when the speed is sufficient to maintain a pressure film between the two surfaces.*

According to this reasoning, the friction at high speeds and with perfect lubrication appears to be, *ceteris paribus,* approximately proportional to the area of the contact surfaces, the speed of the journal and the viscosity of the lubricant, and nearly independent of the load.

Before the journal commences to rotate, the lubricant being a viscous one, the load will have brought the brass into contact with the former at O (fig. 53); but at the ends it will be separated by an appreciable space from the journal. *At starting, and at very low speeds,* the surfaces being in contact, there is friction of solid upon solid, *the coefficient of friction is large,* and the surfaces undergo some abrasion; but as the velocity of the journal increases, the surfaces gradually become separated by an oil film, more particularly if there be a plentiful supply of lubricant. Thickening of the film, as we have seen, can only take place to a limited extent, owing to the curvature of the surfaces, so that *with increasing speed the resistance becomes more nearly proportional to the viscosity of the oil film and less affected by the load. At the outset, as with plane surfaces, when the oil film has scarcely established itself, the friction,* ceteris paribus, *varies with changes of load.* However, owing to the curvature of the surfaces, the film very quickly reaches a maximum thickness.

Table XXX. gives the results obtained by Beauchamp Tower with bath lubrication. During the experiments, the temperature of the brass was maintained at 90° F., and no variation exceeding 1½° above or below this figure occurred.

The loads ranged from 100 lbs. to 520 lbs. per square inch, nominal, and yet for each speed the frictional resistance was nearly a constant. *Above speeds of* 100 *feet per minute low-speed effects do not show themselves, and the friction will be seen to be nearly proportional to the square root of the speed* instead of to the actual speed.

Although the temperature of the brass was maintained at 90° F., the temperature of the film must have been several degrees above this. The probable rise in the temperature of the film above that of the brass was calculated by Osborne Reynolds; and taking this rise into consideration as well as the mean thickness of the film, he obtained results for the frictional resistance which agreed very closely with those of Tower. On the diagram (fig. 55) are plotted these calculated and experimental figures.

TABLE XXX.—BATH OF OLIVE OIL. TEMPERATURE 90° F.

Journal, 4 inches wide × 6 inches long. Chord of Arc of Contact = 3·92 inches.

Nominal Load. Lbs. per sq. in [1]	Nominal Frictional Resistance in lbs. per Square Inch of Bearing Surface.							
	105 ft per Min	157 ft. per Min.	209 ft per Min	262 ft. per Min.	314 ft per Min.	366 ft per Min.	419 ft per Min	471 ft. per Min.
520	...	·416	·520	·624	·675	·728	·779	·883
468	...	·514	607	·654	·701	·794	841	935
415	...	498	·580	·622	705	·787	·870	·995
363	...	·472	·580	·616	·680	·725	·798	·907
310	. .	·464	·526	·588	·650	·680	·742	·835
258	·361	·438	·515	592	·644	·669	·747	·798
205	·368	·430	·512	·572	·613	·675	·736	·818
153	·351	458	·535	·611	·672	·718	·764	·871
100	·360	450	·550	·630	690	·770	·820	·890

[1] The nominal load per sq. inch is the total load divided by (4 × 6).

Goodman has also published some results which he obtained with different speeds and different methods of lubrication at a constant bearing temperature of 40° C., and which are given in Table XXXI.

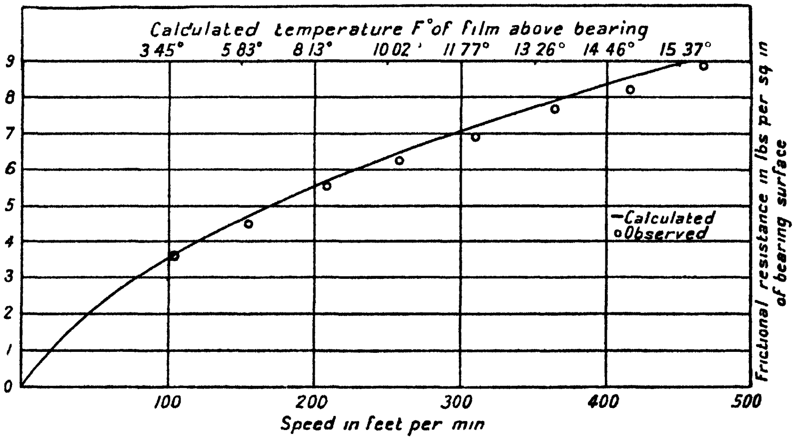

FIG. 55.

Up to the speeds printed in heavy type in this table the friction is high, owing to the pressure film not having been properly formed. At higher speeds, however, as found by Osborne Reynolds, the frictional coefficient is approximately proportional to the square root of the speed.

Had Tower allowed the temperature of the journal to assume a steady state at each speed, the difference between the temperature of the film at high and low speeds would have been much greater and the increase in the friction with increase of speed would have been much less. Table XXXII. shows the results of some experiments by the authors. Here the load was only about 12 lbs. per square inch and the coefficient of friction consequently rather high. The friction with pale machinery oil, viscosity 1·18 poises at 60° F., is the same at all the higher speeds. With motor cylinder oil, viscosity 6·60 poises at 60° F., the friction is greater, but at the higher speeds decreases slightly with increasing speed. The variation of the frictional resistance with speed, therefore, depends upon the characteristic viscosity curve of the oil used.

TABLE XXXI.—RESISTANCE AT DIFFERENT SPEEDS.

Load, 300 lbs. Temperature, 40° C. Brass, 0·5 inch × 4 inches.

Oil Bath.		Saturated Pad.		Oily Pad.	
Feet per Min.	Coefficient of Friction, μ_1	Feet per Min.	Coefficient of Friction, μ_1.	Feet per Min.	Coefficient of Friction, μ_1.
2·6	·1610	4·70	·1610	5·2	·1540
7·8	·0630	7·80	·0910	**7·8**	**·0560**
11·0	·0140	**13·61**	**·0700**	11·0	0021
15·7	**·0052**	38·20	·0021	17·3	·0021
57·1	·0017	88·50	·0024	27·2	·0028
67·0	·0017	111·50	·0028	61·3	·0042
103·7	·0021	122 00	·0035	88·5	·0070
122·0	·0028	149 70	·0063	122 0	·0091
146·6	·0035	183·20	·0098	161·0	·0126
164·9	·0038	213·60	·0126	183·0	·0168
183 2	·0042	...	...	209·4	·0217
...	...	...	...	242·9	·0252

TABLE XXXII.—COEFFICIENT OF FRICTION AT DIFFERENT SPEEDS WHEN TEMPERATURE OF BEARING IS ALLOWED TO RISE.

Load 12 lbs. per square inch.

Mineral Lubricating Oil used.	Temperature F°.	Absolute Viscosity in poises.	Speed in feet per min.	Steady Temperature of Bearing above room. F°.	Friction Coefficient.
900/7 Pale Machinery Oil.	60°	1·18	20	2·5°	0·004
	100°	0·33	219	20·0°	0 027
	150°	0·12	442	43·5°	0·027
	212°	0·05	589	53·5°	0·027
Queen's Red Engine Oil.	60°	2·99	20	4·5°	0·007
	100°	0·71	219	33·0°	0·048
	150°	0·20	442	52·0°	0·052
	212°	0 07	589	59·0°	0·052
Motor Cylinder Oil.	60°	6·60	20	2·0°	0·020
	100°	1·27	219	37·0°	0·068
	150°	0·31	442	60 5°	0·066
	212°	0·12	589	66·5°	0·061

Pétroff suggested a method of diagrammatically showing this variation of the friction when using oils of different viscosities. Diagram fig. 56 shows this method. Here the ordinates are viscosities and the abscissæ temperatures, and AA′ and BB′ are the viscosity curves of two different oils. If mt be the friction with oil A at the bearing temperature t, and t_0 the atmospheric temperature, then a line drawn from t_0 through m to n shows the friction with the oil B to be nt' and the temperature of the journal t'. This method assumes that the temperature of the journal is proportional to the heat liberated by friction, and also that the temperature of the film is equal to that of the journal. The authors have tested the method by plotting the experimental figures shown in Table XXXII, but the results obtained by the method do not show any close agreement with those experimentally obtained.

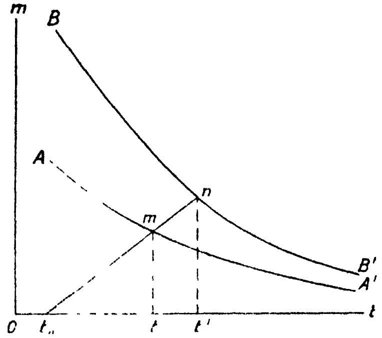

FIG. 56.

O. Lasche[1] made an elaborate series of experiments on the friction and lubrication of motor bearings at journal speeds rising to nearly 4000 feet per minute, and at pressures up to 213 lbs. per square inch. Measurements of the friction were made under varying conditions of load, speed, temperature, fit of bearings, and method of applying the lubricant. Measurements were also made of the work expended in overcoming friction, and of the dissipation of heat from bearings by conduction, radiation, and by the flow of oil between the friction surfaces. The diagram (fig. 57) by Lasche graphically compares the results obtained by Tower, Thurston, and himself, in so far as they cover the same experimental ground.

As regards the influence of speed on the coefficient of friction when the temperature is allowed to assume a steady state, Lasche shows that the friction decreases steadily up to 1970 feet per minute, when it becomes practically independent of the velocity.

Pullen and Finlay[2] also showed that with gas-engine oil the friction remained nearly constant above speeds of 360 feet per minute, whereas with heavy engine oil the friction continued to decrease up to 780 feet per minute.

That the variation of the temperature with speed differs with different designs of bearings is shown by the diagram (fig. 58). Here K/60 gives the rate of radiation in foot-lbs. per square inch of projected area of bearing. The curve A shows the results obtained by Lasche with an ordinary bearing, whilst B is for a ventilated bearing. The lower curve C was obtained by Goodman with his experimental testing machine.

Osborne Reynolds concluded from his theoretical investigation of the friction of lubricated journals that if the viscosity of the lubricant remained constant the friction would increase proportionally to the speed. Owing, however, to the fact that the heat resulting from the viscous friction of the lubricant raises the temperature of the whole of the bearing above that of the atmosphere, and also locally raises the temperature of the oil film very considerably, the viscosity of the lubricant decreases with increasing speed, and consequently the friction increases at a less rapid rate than the speed. The

---

[1] *Traction and Transmission*, January 1903, p. 33. We are indebted to the proprietors of *Engineering* for the use of the blocks of figs. 57 and 58, borrowed from their paper.

[2] *Proc. Inst Mech. Eng.*, May 1909, p. 518.

extent to which the viscosity of any particular lubricant decreases with increase of temperature depends, of course, upon the nature of the oil, the rate at which it is supplied to the bearing, and the rate at which the bearing loses heat by radiation and conduction. Hence different observers, experimenting with different oils and different machines, have obtained results which have not agreed absolutely. But the results given above no doubt express the facts approximately.

Comparison of Friction Coefficients of Journals, from the tests of "Thurston." "Tower" & "A E G."

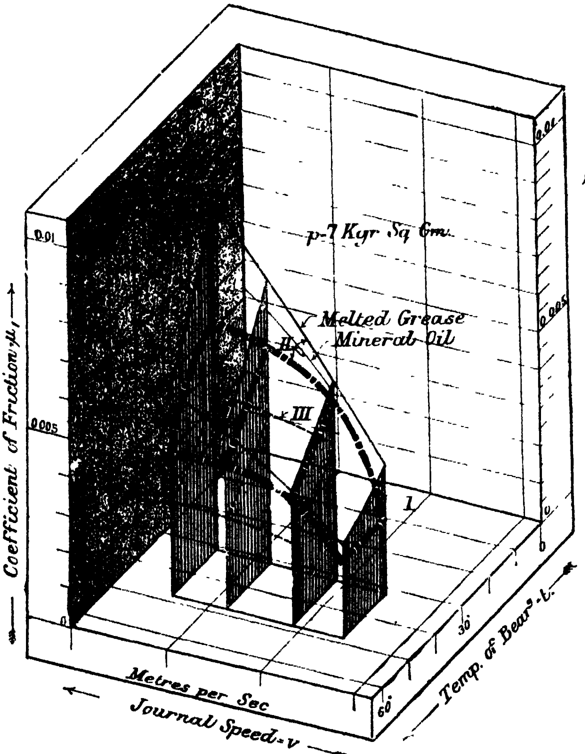

		JOURNAL	BUSHES.	OIL	LOAD ON
I	Thurston	Steel	Gun Metal	Sperm Oil	Top & Lower Bush
II	Tower	Steel.	Gun-Metal Dia. 102. L.g 152.	Melted Grease Mineral Oil	Top Bush
III	A.E.G	Nickel Steel.	Gun Metal Dia. 250 L.g 110	Imperial "0" Oil.	Lower Bush

FIG. 57.

Pressure of the Oil Film.—By means of a pressure gauge and of holes drilled in the brasses, Tower was able to measure the pressure of the oil film at various points of the surface.

Fig. 59 shows the exact curve of pressure calculated by Osborne Reynolds under conditions corresponding very closely with those in one of Tower's experiments, in which, by means of a pressure gauge, he actually measured the pressure of the oil at several points in the film. The observed pressures as plotted by Tower are shown in figs. 60 and 61. In this experiment, when the load was 100 lbs. per square inch, and the temperature was 70° F., the thickness of the film at various points must, according to Osborne Reynolds, have been as follows:—

Radius of brass—radius of journal = ·00077 inch.
E_1F_1 (point of nearest approach) = ·000375 ,,
Angle OJF . . . . . = 48°.

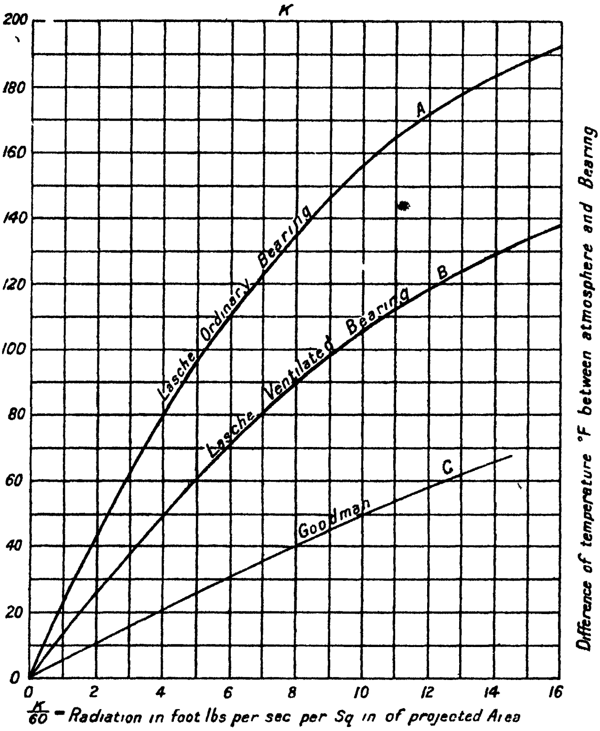

FIG. 58.

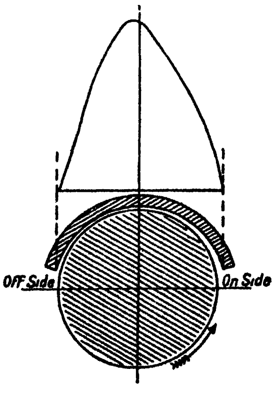

FIG. 59.

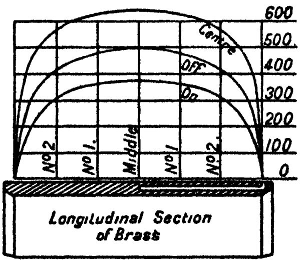

FIG. 60.

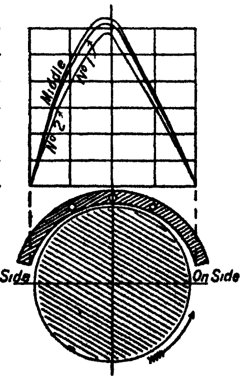

FIG. 61.

The possible motion of the fluid in a direction at right angles to that of the motion and parallel with the axis of the journal has not yet been referred to.

In practice, the length of brasses is necessarily limited, and the oil can escape laterally. Such an escape will obviously prevent the pressure of the oil film from reaching its full height, except at considerable distances from the ends of the brass, and will cause it to fall to zero at the extreme ends.

The lubricant does not, therefore, all flow in a direction parallel with the direction of motion, except at the centre, but follows paths curved from the centre of the brass, some reaching the sides and escaping.

Tower measured the pressure at several points along the brass in a line through O (fig. 53), and found it to follow the curves of pressure shown in fig. 60, which correspond to those which might be expected to result from an escape of oil at the free ends.

Influence of Viscosity.—Just as, owing to the fact that the lubricating film can only thicken to an extent depending upon the difference between the radius of the brass and that of the journal, the frictional resistance is practically independent of the load, so *the friction of a cylindrical journal should be proportional to the viscosity of the lubricant* when the eccentricity is small.

TABLE XXXIII.—RESULTS OF TOWER'S EXPERIMENTS.

Temperature Fahr.	Relative Viscosities.	Coefficient of Friction for Speeds as below.							
		105 feet per min.	157 feet per min.	209 feet per min.	262 feet per min.	314 feet per min.	366 feet per min.	419 feet per min.	471 feet per min.
120°	35	0·0024	0·0029	0·0035	0·0040	0·0044	0·0047	0·0051	0·0054
110°	40	0·0026	0·0032	0·0039	0·0044	0·0050	0·0055	0·0059	0·0064
100°	48	0·0029	0·0037	0·0045	0·0051	0·0058	0·0065	0·0071	0·0077
90°	55	0·0034	0·0043	0·0052	0·0060	0·0069	0·0077	0·0085	0·0093
80°	65	0·0040	0·0052	0·0063	0·0073	0·0083	0·0093	0·0102	0·0112
70°	75	0·0048	0·0065	0·0080	0·0092	0·0103	0·0115	0·0124	0·0133
60°	89	0·0059	0·0084	0·0103	0·0119	0·0130	0·0140	0·0148	0·0156

The effects of viscosity have been experimentally determined by Beauchamp Tower for various speeds above that at which the pressure film is fully formed. The lubricant used was lard oil, the viscosity of which was varied by heating the journal and brass. The viscosity of the lard oil used was not specified, but Goodman gives its probable comparative values at the temperatures stated.

Table XXXIII. is taken from Tower's paper, with the addition of a column giving the comparative viscosities. The experimental results will be seen to be entirely in agreement with theory. At the lowest speed the coefficient of friction is nearly proportional to the viscosity; but at higher speeds the agreement is not so good. Had it been possible to ascertain the exact temperature of the film, the results of experiment and theory would have been more in accordance with each other.

In the experiments on the pivot bearing it was pointed out that the slight disagreement between experiment and theory might be accounted for by the heating of the film. With parallel surfaces the friction varies only as the square root of the viscosity. No very marked effect was, therefore, to be anticipated from this heating, especially as the speeds were comparatively low. But in the case of a journal where the friction is proportional to the viscosity, the effect might be very marked. Indeed, there are grounds for believing that, as Osborne Reynolds contends, the reason why the resistance does not, in the case of a journal, increase at a rate proportional to the speed is that the rapid distortion which the oil suffers, heats it and lowers its viscosity.

Change of viscosity also has a considerable effect upon the carrying power. Table XXXIV., by Goodman, shows the effect which a change in the viscosity, brought about by rise of temperature, has upon the frictional resistance and carrying power of a journal, the speed being 7·8 feet per minute.

The actual viscosities at the temperatures of the experiments were not determined. They must, however, have been greatest at the lower temperatures, and *vice versa*. Although the speed is low, there is, on the whole, a reduction of the friction as the temperature increases, when the loads are small, but not so marked a change as might be expected. It will also be noticed that *the greater the viscosity, the greater the load which the bearing will carry without undue friction resulting from the failure of the pressure film to form properly.* In this table, the loads between which the coefficient of friction has a minimum value have been printed in heavy type.

TABLE XXXIV.—OIL-BATH LUBRICATION.

Speed, 7·8 feet per minute.

Temperature 40°.			80°.		20°.	
Load in Lbs.	μ_1.	F. Lbs.	μ_1.	F. Lbs.	μ_1.	F. Lbs.
50	·0061	·30	·0080	·40	·0084	·12
100	·0038	·38	·0041	·41	·0042	·42
150	·0027	·40	·0028	·42	·0028	·42
200	·0020	·40	·0021	·42	·0021	·42
250	**·0016**	**·40**	·0021	·52	·0019	·47
300	·0017	·51	·0017	·51	·0016	·48
350	·0021	1·22	**·0015**	**·52**	·0014	·49
400	·0029	1·16	·0016	·64	**0013**	**·52**
450	·0042	1·89	·0019	·85	·0013	·58
500	·0189	9·45	·0044	2 20	·0029	1·45
550	·0515	28·33	·0126	6·93	0764	42·03
560	·0562	31·48	·0142	7·95	·0937	52·47
580	·0724	42·00	·0253	14·68	·1086	63·00

The reduction in the frictional resistance which results from the lowering of the viscosity by the heating of the lubricating film is by no means advantageous, and accounts in a great measure for the failure of bearings to carry heavy loads at high speeds. The heating is most severe where the film is thinnest, *i.e.* at the point E_1F_1 (fig. 52). Reduced viscosity at this point greatly lowers the carrying power of the brass. Again, if from any cause the bearing should become warm, mineral oils become very fluid and cease to lubricate properly.

Influence of the Area of Bearing Surface.—With parallel plane surfaces it was found that the friction does not increase much when the area is increased, for an increase of area brings about an increase in the *thickness* of the film. But here again a cylindrical form of bearing gives a different result, the frictional resistance being more nearly proportional to the area, owing to the fact that when the speed is moderately high the film has a fairly constant effective thickness under all loads.

Table XXXV., giving the results of some experiments by Goodman, brings this out very clearly. The frictional resistance at different loads does not vary very much. On the other hand, the long, narrow brass offers a very much smaller resistance to the motion of the journal than does the brass having a chord of contact measuring 2 inches. The area of the surfaces is in all cases proportional to the length of the arc of contact, which is given for each size of brass. If the film were of even thickness throughout the length of the arc, the friction would be simply proportional to its length. The film, however, is much thicker on the " on " side, where the lubricant enters, than it is nearer the centre of the brass. The resistance offered to the motion of the journal by those portions of the brass respectively near the " on " and " off " sides are, therefore, less than the friction near the middle of the bearing, and, as the brass is cut away at the sides, the thickness of the film is also very slightly reduced. The reduction of the resistance is, therefore, not quite proportional to the reduction of the area, as will be seen by comparing the lengths of the arcs with the mean frictional resistances. A closer approximation of the obtained results with theory cannot be expected, as everything depends upon the curvature of the surfaces remaining unaltered during the experiments.

TABLE XXXV.—BATH LUBRICATION (GOODMAN).

Length of Brass, 4 inches. Speed, 121·9 feet per minute.

Width of Chord in contact, 2 in. Angle subtended 180°.			1·75 in. 122°.		1·5 in. 97°.		1·0 in. 60°.		0·5 in. 29°.	
Total Load in lbs.	μ_1.	F. Lbs.	μ_1.	F. Lbs	μ_1.	F. Lbs.	μ_1	F. Lbs	μ_1.	F. Lbs.
50	0·0441	2·20	0·0458	2·29	0·0418	2·09	0·0210	1·05	0·0126	0·63
100	0·0288	2·88	0·0238	2·38	0·0209	2·09	0·0105	1·05	0·0084	0·84
150	0·0192	2·88	0·0160	2·40	0·0140	2·10	0·0070	1·05	0·0056	0·84
200	0·0159	3·18	0·0121	2·42	0·0106	2·12	0·0055	1·10	0·0042	0·84
250	0·0128	3·20	0·0097	2·42	0·0085	2·12	0·0044	1·10	0·0034	0·84
300	0·0103	3·09	0·0081	2·43	0·0071	2·13	0·0037	1·11	0·0028	0·84
350	0·0085	2·97	0·0070	2·45	0·0061	2·13	0·0033	1·15	0·0024	0·84
400	0·0071	2·84	0·0062	2·48	0·0054	2·16	0·0029	1·16	0·0021	0·84
450	0·0062	2·79	0·0055	2·47	0·0049	2·20	0·0028	1·26	0·0019	0·84
500	0·0058	2·90	0·0049	2·45	0·0044	2·20	0·0029	1·45	0·0017	0·84
550	0·0051	2·85	0·0045	2·47	0·0040	2·20	0·0027	1·48	0·0015	0·84
Mean	..	2·89	..	2·42	..	2·14	..	1·18	..	0·82

Stanton's Experiments.—The experiments of Beauchamp Tower were carried out with bearings which had been bedded down in the usual way, and the radius of the brass was only very slightly greater than that of the journal, the lubrication being effected by causing the lower side of the journal to dip into an oil bath. In his experiments on journal friction, T. E. Stanton[1] used a journal of hardened steel, 1 inch diameter, working in a bush-bearing. Two such bushes were experimented with, one 1·02 inches diameter, and the other 1·06 inches diameter. These gave a very large clearance, much larger than could exist for long in a working bearing. The bush and journal were made as accurately cylindrical as possible, and to prevent wear during the experiments the journal was always started up light, so as to form a viscous film, and was then loaded. A description of the machine will be found on p. 453, Chapter X. It will be noticed that means are provided for measuring the film

---

[1] *Proc. Inst. Mech. Eng.*, ii. (1922), pp. 1117–1145.

pressure over a large arc of the bearing, this being accomplished by the use of a loose, perforated bush which could be moved so that the perforation leading from the pressure gauge to the oil film could be fixed in any desired position. Owing to the large clearance, a current of oil could be passed through the space between the bush and journal, and this provided what was practically bath lubrication.

With this apparatus, Stanton was able to get an accurate measurement of the pressure of the oil film under very eccentric conditions of brass and journal.

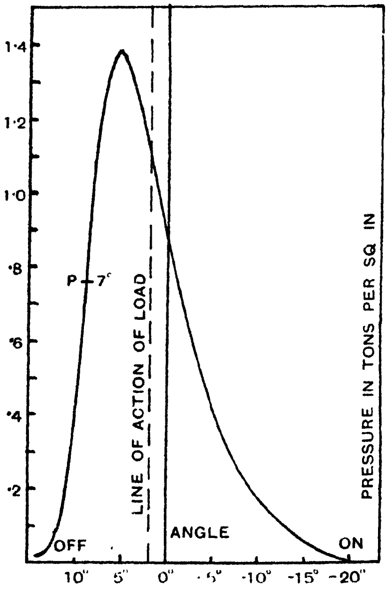

Fig. 62.

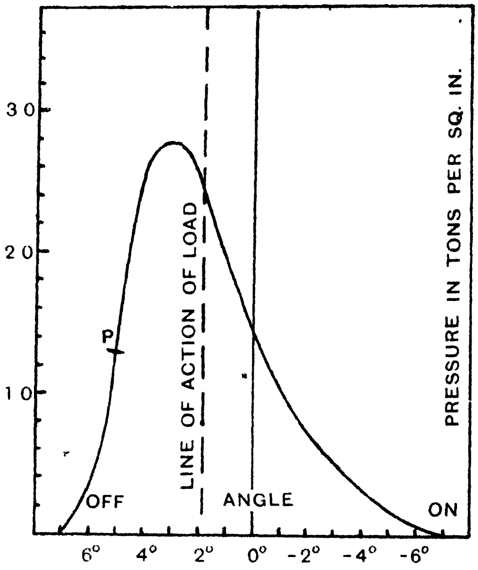

Fig. 63.

Figs. 62 and 63 show in diagrammatic form tests with rape oil and F.F.F. mineral cylinder oil under the following conditions:—

	Rape Oil.	F.F.F. Cylinder Oil.
Diameter of bearing	1·02 in.	1·06 in.
Length of journal	2·50 „	2·50 „
Diameter of journal	1·00 „	1·00 „
Revolutions per minute	1000	1000
Total load	690 lbs.	690 lbs.
Arc of pressure in diagram	35°	14°
Angle of nearest approach, P	7°	3° 15′
Temperature of film	33·4° C.	51·6° C.
Coefficient of friction	0·0035	0·0017
Least distance between surfaces	0·000096 in.	0·000066 in.

Stanton remarks: "It is clear, therefore, that the phenomenon of seizing is not, as is sometimes supposed, a mere question of the closeness of approach of the surfaces, unless the irregularities of the surfaces in Tower's experiments were very much greater than in the present experiments, which is not probable."

"All the evidence appears to show that, apart from what happens in the case of new bearings which are being 'run in,' the conditions of lubrication of a cylindrical journal, when they have become steady, are of the Reynolds' type right up to the seizing pressure."

To show that the use of a more viscous oil need not necessarily increase the friction much, Stanton worked out from Sommerfeld's equations the frictional resistances of a 4-inch bearing in which the load and speed are always the same and the lubricant alone is varied.

The results are given in the following table :—

TABLE XXXVI.

Diameter of journal .	4 inches.
Diameter of bearing . .	4·004 inches.
Speed	188 r.p.m.
Load	3420 lbs. per inch run.

Viscosity of Oils (Poises).	Nearest Approach in ins.	Coefficient of Friction.
0·223	6×10^{-5}	0·00094
0·488	18×10^{-5}	0·00096
0·824	35×10^{-5}	0·00099

Influence of the Method of Lubrication.—As stated on p. 95, the method of lubrication has a much greater influence on the friction at high than at low speeds. The results given in Table XXXVII. by Goodman illustrate this.

TABLE XXXVII.—INFLUENCE OF METHOD OF LUBRICATION AND CONTACT AREA UPON FRICTIONAL RESISTANCE.

Length of Bearing, 4 inches. Speed, 122 feet per minute.

Method of Lubrication	Width in Inches of Chord of Bearing Surface.				
	2·0	1·75	1·5	1·0	0·5
	Frictional Resistance in Lbs.				
Oil-bath, . . .	2·89	2·42	2·14	1·18	0·82
Saturated pad, .	4·47	3·98	2·49	2·10	1·06
Oily pad, . . .	7·97	6·62	5·80	3·80	2·70

Bath or "perfect" lubrication is obtained by allowing the underside of the journal to dip into a bath of the lubricant. In this way the journal picks up and throws against the brass a thick film of oil, and the result is "perfect lubrication," *i.e.* the thickest film is secured which the bearing can automatically maintain.

Pad lubrication is obtained by pressing a woollen or felt pad soaked with the lubricant against the journal. When the pad rests in a bath of the lubricant and is kept thoroughly soaked, the results obtained are not greatly inferior to those given by the bath. When, however, the supply of oil to the pad is efficient, the difference is marked, as will be seen from the results given in he table.

Alternating Pressures.—In some cases the loads upon bearings are by no means constant, for the faces often alternately approach and recede from each other. When this is the case, and the alternation is very rapid, the bearing will carry a very great weight, for at each alternation the pressure is completely relieved, and the oil "trapped" cannot be expelled during the short time the load rests on the bearing. The large ends of connecting rods may be instanced as cases in point Here, although the pin is rapidly rotating in the brasses, the load frequently reaches several tons per square inch. On the small end brasses the load may be even greater, for the angular movement of the brass on the pin is only small. The reason why the lubricant cannot escape whilst the pressure lasts is doubtless that the volume of oil which can be "squeezed" out by any particular load is proportional to the cube of the thickness of the film.

Wear of Cylindrical Bearing Brasses. To obtain a low coefficient of friction when the bearing surfaces are cylindrical in form, the radius of the journal must be rather smaller than that of the brass, so as to leave space for a film of the lubricant to insinuate itself between the surfaces. When the bearings have been newly and accurately fitted together, the friction is generally high, but after they have been at work for some time the resistance is found to have largely decreased. This results mainly from the altered shape of the brasses consequent on wear. The exact nature of the wear which takes place in rubbing surfaces is, therefore, of the utmost importance, for upon it depends very largely the frictional resistance of the bearing. Unfortunately, this aspect of the question has only received a very small amount of attention. Indeed, until more evidence is forthcoming concerning the results of wear, we have no guarantee that the friction is really independent of the load; for there is every reason to believe that upon the load largely depends the shape the surfaces assume from wear. Thus, although when the surfaces have arrived at a certain shape, rapid changes of load do not alter the frictional resistance, it is not unlikely that for each load, if it act for any length of time, there is a different curve of brass, and therefore a different frictional resistance.

As at high speeds the oil film is practically continuous and keeps the surfaces quite apart, such wear as then occurs must result from the intrusion of solid particles rather larger in diameter than the thickness of the lubricating film. But, doubtless, the chief wear takes place at low speeds when the surfaces are in contact. Actual abrasion then occurs.

When moving very slowly, the brass actually touches the journal at E_1F (fig. 52), or even on the "on" side of O (fig. 53), but at ordinary speeds the liquid is *wedged* between the surfaces and keeps them apart on this side. Thus the wear is almost wholly on the "off" side, where, except at considerable speeds, the surfaces touch, and the brasses when not very narrow are worn to a larger radius than that of the journal. When the journal is not in motion, the point of contact will be at O; consequently, as the speed changes, the position of abrasion will also change. The action is the same whether the brass be lubricated by a siphon supplying oil to the crown of the bearing, or by a pad beneath the journal. However, when the chord of the arc covered by the brass is small, the wear tends to become more evenly distributed over the whole bearing surface. Even then the wear tends to make the radius of the brass larger than that of the journal, and thus renders efficient lubrication possible.

In the case of railway journals and brasses, the wear is sometimes on one side of the brass and sometimes on the other, according as the direction of motion of the vehicle changes; but when a shaft or journal always rotates in the same direction, the wear is always on the same side. This one-sided wear often disturbs the adjustment of mechanical oil-testing machines, and effects arising from this cause should always be looked for.

Air as a Lubricant.—The action of a lubricant in a journal bearing has been ingeniously illustrated in a machine designed by Prof. A. Kingsbury.[1] The following description is taken from the *Chemical Trade Journal,* xxvi. p. 232:—

The machine consists of a steel piston or short shaft to be rotated, and a cast-iron ring or cylinder which acts as a bearing for the shaft, the whole being supported on rollers mounted on a suitable frame. The shaft weighs 50½ lbs., is 6¼ inches long and 6 inches in diameter, and its weight constitutes the total downward pressure on the bearing. The diameter of the cylinder is slightly less than $\frac{1}{2000}$ inch larger than the shaft—a fairly loose fit. Both cylinder and shaft are ground exactly parallel.

The cylinder is set horizontally, the shaft inserted (both being perfectly clean and dry), and rotated with the hand by the handle at the end. It can be turned with difficulty at first, and the harsh, grating sound of metal rubbing on metal will be heard. With an increase of speed, however, the grating ceases and the force required to turn the shaft is materially decreased until, after a few revolutions, the shaft becomes entirely free from the cylinder and rotates on the film of air between. Set rotating at, say, 500 revolutions per minute, it will continue to rotate four or five minutes. If allowed to run, the speed gradually decreases from the start until, suddenly, the piston breaks through the intervening layer of air, and a few more revolutions suffice to bring it to a sudden stop. If a more conclusive proof is required that the shaft is entirely separated from the cylinder, an electric bell may be included in a circuit, of which the shaft is made one terminal and the cylinder the other, when it will be found that the bell is silent so long as the shaft rotates at any considerable speed. It is interesting to note that with this machine Kingsbury found the minimum coefficient of friction of the journal lubricated by air to be 0·00075, which is nearly the same minimum coefficient as he observed with oil as a lubricant when the lubricating film was perfect (see p. 433).

Theory of Ball- and Roller-bearing Lubrication.—It is well known that although the use of a lubricant is necessary for ball- and roller-bearings to prevent wear, the lubricant generally causes an increase of the friction coefficient. The lubricant with these forms of bearing serves two important purposes. In the first place, the surfaces of the ball and the races are elastically distorted by the pressure, and there is on this account a certain amount of slipping between the ball or roller and the race. This slipping soon removes the ordinary adsorbed film which forms on all surfaces, and the metal surfaces come into actual contact. In this condition the hard surfaces grind and injure each other. By the application of a lubricant, the adsorbed film is constantly renewed. In the second place, the lubricant prevents the access of the atmosphere to the metallic surfaces from which the adsorbed film has been removed by friction, and prevents corrosion; indeed, the value of the protection afforded to the working surfaces cannot be overestimated.

The reason why the presence of a lubricant actually increases the coefficient of friction, especially at high speeds of running, is due to the fact that as the ball or roller advances over the race it has to expel the lubricant from the small wedge shape in front, or override the oil or grease. The probable conditions at high speeds are shown in fig. 64. Here the ball or roller is

---

[1] *Jour. Amer. Soc. Naval Engineers,* 1897.

shown actually separated from the race below by a true viscous pressure pad, the distribution of pressure in which is shown by the small diagram below. It will be seen at once that the conditions of working are very similar to those in a journal, the surface of the ball or roller representing the stationary surface, and the flat surface that of the rotating journal. However, the viscous pad in the case of the ball or roller must be very much shorter than in the case of the journal. Stanton has shown that even when the journal and brass differ considerably in diameter, the viscous pressure pad is short, but functions normally. The greatest pressure area of the viscous pad is in front of the ball or roller, and it is this obstruction in front that increases the friction, although the surfaces are not in contact. The viscous friction of the oil raises the temperature of the bearing. At moderate speeds, greases answer well as lubricants for ball- and roller-bearings, but when the speeds are high, thin oils must be used.

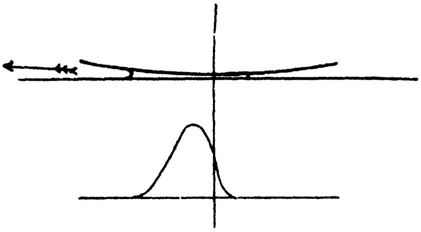

FIG. 64.

The conditions for forming an oil pad are much more marked in the case of a roller-bearing than with a ball-bearing, for in the latter case the oil can escape at the sides as well as at the front and back. When using a long roller, the conditions for the formation of a viscous pad are such that high speeds result in high-bearing temperatures, and cooling methods must be resorted to.

CHAPTER VI.

LUBRICANTS: THEIR SOURCES, PREPARATION, AND CHIEF PROPERTIES.

LUBRICANTS are, with few exceptions (graphite, talc, etc.), fluid or semi-fluid substances, capable of forming and maintaining between friction surfaces liquid films of sufficient thickness to keep the solid surfaces apart, and of forming upon the solid surfaces adsorbed films, which are more soft and yielding than the unlubricated surfaces and oppose less frictional resistance to the motion. The substances which possess in the highest degree the latter essential property of a true lubricant, belong to the class of bodies known as fatty oils and fats. Until the latter half of the last century lubricating oils were derived almost exclusively from the animal and vegetable kingdoms, but the introduction and development of railways, steamships, and other forms of motor transport, and the immense developments which have taken place in the use of machinery generally, have rendered the older sources of supply of lubricants totally inadequate, and these older lubricants are, moreover, not generally suited for use with internal combustion engines, where much higher temperatures are involved than with steam engines. It has long been known that lubricants could be prepared from petroleum, and that they possessed certain advantages over the older lubricants. The rise and development of the modern petroleum industry fortunately coincided with the increasing demand, and the result has been that lubricants are now prepared mainly from mineral sources, and the animal and vegetable oils and fats and products derived from them are now used chiefly in admixture with the mineral lubricating oils, to supply or augment certain properties in which the latter are deficient. We commence with a description of the lubricants derived from petroleum and shale, which have received the name of—

A.—MINERAL LUBRICATING OILS.

I. Sources and Composition of the Crude Oil.

Petroleum.—Crude petroleum is a highly complex liquid product which is found very abundantly in various parts of the world, sometimes issuing naturally from the ground, but only obtained in commercial quantity by means of wells. Its occurrence is not limited to any particular country, continent, or geological formation, except that it is found only in sedimentary rocks.

Oil is found in all parts of the world, and whilst many of the older and most important oilfields are considered to be showing signs of exhaustion, the discovery of other prolific fields has more than compensated for any declining output of the older fields. Very largely, the increased demand for oil has been for fuel purposes, but this has naturally caused a correspondingly increased demand for the mineral lubricating oils.

For many years the oilfields of the United States have occupied the premier position in production, and still yield about two-thirds of the world's produce. The Appalachian field (Pennsylvania, West Virginia, Kentucky, Ohio) yields paraffin base oils, usually of low gravity, and these oils furnish some of the best grades of distillate and cylinder oils. A similar type of crude oil is furnished by the Lima-Indiana field. In the extensive Mid-Continental field (Oklahoma, Kansas, North Texas, and Louisiana) paraffin base, asphaltic base, and mixed base oils are found, the latter partaking of the character of the two extreme types. The chief production is from the Californian oilfield; most of the oils being of an asphaltic character, and this is a large source of fuel oils. Mexican oils are mainly of the same type; but lower gravity, mixed base oils are also produced.

Russia was for many years the next largest producing country to the United States, but the War and political changes interfered seriously with production; this is, however, recovering. The oils are mainly of the naphthenic type and seldom yield wax; but good quality lubricating oils, characterised by a low cold test, are produced from them. Galicia and Roumania were also large producers, but here again there was serious interference during the War, most of the plant in Roumania being destroyed.

In the far East, the Dutch East Indies, Borneo, and Burma are important contributors. The more recently discovered Persian oilfields have already yielded highly, and the oil reserves are estimated to be very large. The oil is of a mixed base type, and is refined to yield the usual range of distillates and wax, or topped to leave a residual fuel oil.

British possessions have contributed but a small proportion of the total output; Canada, which at one time was regarded as a most promising field, has shown a rapid decrease in its output; hopes, however, are entertained of developing an oilfield in the North-West territory. The more recently exploited Trinidad oilfields yield about eight times the Canadian production. Egypt, Venezuela, Peru, and the Argentine are recent additions to oil-producing countries.

Crude petroleum is composed almost entirely of compounds of carbon and hydrogen—*the hydrocarbons*—of which there are several "series," the members of each being characterised by similar chemical properties. Broadly, there are four principal series which constitute the bulk of all crude oil—the paraffins, olefines, naphthenes or polymethylenes, and the benzenes. In each hydrocarbon series, members from the lowest to the highest molecular weight may be present, with corresponding increase in boiling-point and specific gravity. Thus in the paraffin series, which constitutes the main portion of Pennsylvanian oil, there may be such volatile "spirits" as pentane (C_5H_{12}), boiling at 37° C., on the one hand, and solid hydrocarbons melting at 60–70° C., which constitute the paraffin wax, on the other.

In addition to the hydrocarbons, crude oils contain oxygen compounds—naphthenic acids and phenolic substances—and sulphur compounds, thioethers, etc., which are objectionable constituents for many purposes for which the oil is distilled, and often are difficult or impossible to remove on a commercial basis.

Crude petroleums are, therefore, very complex mixtures—they differ by reason of the different proportions of the various series of hydrocarbons present, and further by the different quantities of the individual hydrocarbons belonging to the same series. Petroleums, consequently, vary widely in composition and physical properties, not only when derived from different fields, but oils from the same field may exhibit considerable differences.

These differences naturally determine the methods of refining to be adopted to give marketable products, although the locality of the refinery, the current demand for products for specific purposes, and prices, will influence the refiner in the scheme of refining he will adopt. Thus it may happen that certain economic conditions determine the sale of the less volatile portions, without further refining of the heavy residues which are used as fuel oils, whilst under other conditions it may be desirable to work these oils for lubricants.

Broadly, crude oils may be divided into those having a " paraffin base," *i.e.* the higher boiling distillates yield paraffin-wax on cooling, and " asphaltic base " oils which yield little or no paraffin, but contain a fairly high proportion of asphaltum or bitumen. The Pennsylvanian oils are paraffin base oils; Californian and Mexican oils are asphaltic base oils. Oils from many large fields partake of the character of each; they are " mixed base " oils. Illinois, Kansas, Oklahoma, North Texas, and Persian oils are of this latter type.

The asphaltic base oils are darker in colour, of greater density, and more viscous than the paraffin base oils, and in general are not used as a source of lubricating oils, but after removal of the lighter fractions the heavy oils are used without distillation as fuel oils. Mixed base oils may be similarly treated, but, on the other hand, may be worked for a full range of products, including lubricating oils, if economic conditions are favourable.

Crude *American* petroleum varies very much in character in different districts, ranging in colour from pale amber to dark greenish or brownish-black, and in specific gravity from about 0·78 to 0·94 (*Hofer*). Some oils are highly limpid, and are composed for the most part of the lighter hydrocarbons suitable for burning in lamps; others contain a large proportion of lubricating hydrocarbons. A few crude oils can be used for lubricating almost without treatment (see "Natural Oils"). A large proportion of the crude petroleum obtained in the United States is distilled for illuminating oil and naphtha, and the still residues ("residuum") are worked up into lubricating oils and paraffin wax; but there are some heavy oils which, being chiefly valuable for the manufacture of lubricating oil, are treated separately. Researches too numerous to mention have shown that American petroleum is composed mainly of hydrocarbons of the paraffin series, C_nH_{2n+2}, with smaller quantities of naphthenes, and of benzene and its derivatives.

Canadian petroleum resembles the oil of Lima (Ohio) in having an offensive odour and containing a notable proportion of sulphur. The production is comparatively small, and the oil is refined for home consumption.

Crude *Baku* petroleum is, in many respects, specially interesting; in the antiquity of historical references to it; in the comparatively small area within which the supply is obtained; in the extraordinary productiveness of the wells; and in the peculiar character of the hydrocarbons of which the oil is mainly composed. According to the researches of Markownikoff and Ogloblin, and others, at least 80 per cent. of crude Baku petroleum consists of hydrocarbons of the naphthene series, $C_nH_{2n-6}.6H$, isomeric with the olefines, but differing from them in being cyclic compounds and not combining directly with bromine. Naphthenes are closed-chain hydrocarbons, also known as polymethylenes, one of the most important being hexamethylene or hexahydrobenzene, C_6H_{12}, which has been obtained in large quantity from Baku and in small quantity from American petroleum.[1] Russian petroleum also contains paraffins and a considerable quantity of aromatic hydrocarbons.

Baku petroleum yields a comparatively small percentage of illuminating oil, the residuum or ostatki, so largely used as fuel, representing about two-thirds of the crude oil. A small proportion of this ostatki is distilled, and

---

[1] Young, *Jour. Chem. Soc.*, 1898, Transactions, p. 905.

lubricating oils are thus obtained, but the Baku petroleum business is primarily a liquid-fuel industry.

Baku petroleum is more uniform in composition than the American product. It usually ranges in specific gravity from 0·850 to 0·875 ; yields a larger proportion of lubricating oil, less illuminating oil, and less naphtha than American petroleum, but no paraffin wax. Owing to the almost entire absence of solid hydrocarbons, lubricating oils from this source will bear exposure to a much lower temperature than American paraffin base oils without solidifying.

In the island of Tcheleken and elsewhere in Russia, petroleum has been found which differs from Baku petroleum in containing a large proportion of solid hydrocarbons, as well as of very volatile hydrocarbons suited for use as motor spirit.

Galician petroleum is stated by Redwood to have been collected in a primitive fashion and used as a cart-grease from very early times. The Galician oilfields are very extensive, and produce oils of very varied character, both light and heavy. Crude Galician petroleum is composed chiefly of hydrocarbons of the paraffin series. According to Dr. Young, it contains more naphthenes and aromatic hydrocarbons than American, but probably less than Russian petroleum. It yields 55 to 65 per cent. of lamp oil, from 30 to 40 per cent. of residuum from which lubricating oils are obtained,[1] and in the case of the oil produced in the Boryslaw-Tustanowixe field, a considerable quantity of paraffin wax.

The production of *Roumania* also exhibited rapid progression, and the industry ranked in importance with that of Galicia, with excellent prospects of further expansion, but in each country the industry suffered severely through the Great War.

The Eastern Archipelago now occupies an important position among the sources of the world's supplies of petroleum. Much of the crude oil of *Sumatra* contains an unusually large proportion of the more volatile hydrocarbons, which are separated by fractional distillation as petroleum spirit, whilst that of *Java* is characterised by the presence of solid hydrocarbons (paraffin) in large quantity. The crude petroleum of *Borneo* has in the past been looked upon as a heavy oil, chiefly suited for use as fuel, but a large production has been obtained at Kotei of oils yielding the usual commercial products, the oil from some of the wells contains much solid paraffin, and some are remarkably rich in aromatic hydrocarbons.

The petroleum of *Upper Burma* has long had a high reputation as a source of lubricating oil, " Rangoon oil " having been originally made from it. The petroleum industry of Burma has for some time past exhibited rapid growth, and the markets of India are largely supplied with the products. The crude oils yield only a moderate quantity of illuminating oil, the lubricating oils and solid paraffin being important products. The various grades of Burma lubricating oils are given in Table XXXVIII.

Crude Persian oil is a mixed asphaltic-paraffin base oil, of specific gravity 0·838 to 0·842. Distillation for petrol, burning oil, and fuel oil has been the general procedure, in suitable topping plants. The approximate yields are: petrol, 20 per cent.; kerosene, 10 per cent.; fuel oil, 70 per cent. The crude naphthas (or " benzines ") contain a considerable proportion of aromatic hydrocarbons. Laboratory tests show that certain of the oils on distillation will yield about 20 per cent. in the lubricating oil—paraffin wax distillate.

Shale Oils.—Although by far the greater proportion of the lubricating oil

---

[1] For an interesting and very complete account of the Galician petroleum and ozokerite industries, see a paper by Redwood, *Jour. Soc. Chem. Ind.*, 1892, pp. 93–119.

of commerce is now obtained from petroleum, it is of interest to remember that shale oils were the first to be produced on a large scale, even in America. Prior to the boring of Drake's well in 1859, which was the commencement of the United States petroleum industry, a number of works were established in that country for the production of oil from coal and shale, and Boghead cannel was even imported from Scotland for the purpose; these factories, which worked under licence from Dr. James Young, the founder of the Scottish shale oil industry, were subsequently converted into petroleum refineries (*Redwood*). Young's first patent for obtaining paraffin oil from bituminous coal was taken out in 1850, and the mineral which he used was Boghead cannel, a rich bituminous mineral yielding by distillation from 120 to 130 gallons of oil per ton. The supply of this mineral soon became exhausted. and since then the Scotch oil has been produced from the bituminous shales of the coal measures. The manufacture of paraffin oil from shale at the works of the Broxburn Oil Company has been described by D. R. Steuart (*Jour. Soc. Chem. Ind.*, 1889, pp. 100-109). The shale is a dark grey or black mineral with a laminated or horny fracture. The greater proportion (73 to 80 per cent) consists of *mineral matter*; the remainder (27 to 20 per cent.) is *organic*, composed chiefly of carbon and hydrogen, with some nitrogen and sulphur. When the shale is heated to a very low red heat in retorts, this organic matter ("*Kerogen*") undergoes *destructive distillation*, splitting up into water, ammonia, gas, and oil. The shale now retorted at the various works in Scotland yields on the average 23 gallons of crude oil per ton, besides permanent gas and ammoniacal water. Whilst the Scottish shales have been worked at a serious loss in recent years, much attention is being given to the utilisation of oil shales in various parts of the world, including the United States. It is realised that as supplies of free petroleum become scarcer, recourse will be necessary to these deposits.

TABLE XXXVIII.—TESTS OF VARIOUS BURMA LUBRICATING OILS.

Oil.	Sp. Gr. at 60° F.	Flash-point (Degrees F.).	Efflux Time (Redwood) seconds.			Settling-point (Flow Test). Degrees F.
			70° F.	100° F.	140° F.	
"40"	0·909	329	126	66	45	28
"50"	0·9175	352	226	98	53	26
"70"	0·9305	380	486	181	73	27
"100"	0·9345	386	938	302	101	26
"120"	0·9365	402	1412	410	126	30
"150"	0·944	420	1920	508	150	30
"180"	0·9455	424	..	762	205	25
"184"	0·9485	406	..	785	210	30
"254"	0·951	428	..	979	239	33
"300"	0·9545	430	..	1255	306	34
"354"	0·9615	442	..	1680	366	54
"454"	0·965	428	..	2225	466	58
"550"	0·961	472	..	3045	583	44
"556"	0·962	452	..	..	552	51
"660"	0·965	470	..	..	661	41
"866"	0·970	480	..	..	905	58

Crude shale oil is dark green in colour, has a specific gravity of 0·860 to 0·890, and is semi-solid at ordinary temperatures owing to the large quantity of solid paraffins ("paraffin wax") contained in it. When warmed to 90° or

100° F., the oil becomes quite fluid. Chemically, it is composed chiefly of hydrocarbons of the paraffin and olefine series, the latter predominating in the fractions used as lubricating oil. Naphthenes and aromatic hydrocarbons are also present in large quantity (Heusler, *Berichte*, 1897, **30**, 2743).

II. Manufacture.

As already indicated, the widely varying character of crude petroleums necessitates various treatment to produce marketable products. The lubricating oils may be broadly classed as (*a*) natural oils, (*b*) reduced oils, (*c*) distilled oils.

(*a*) **Natural Oils.**—A limited quantity of crude petroleum is found in which the proportion of lubricating hydrocarbons is so large that the crude oil only needs purification from suspended and tarry impurities by settling, straining, or filtering through charcoal, in order to render it fit for use. Lubricating oils obtained in this way are known as "natural oils," but very little oil of this description is now produced. A crude oil of this kind from Mecca (Ohio) was very fully investigated by Prof. Mabery recently, and is referred to on p. 136.

(*b*) **Reduced Oils.**—Crude petroleum rich in lubricating oil, but too fluid for use as a lubricant without treatment, is carefully distilled with steam or *in vacuo*, or by means of both steam and vacuum at as low a temperature as possible, so as to avoid cracking, until the lighter hydrocarbons have been driven off. The distillation is then stopped, and the dark-coloured oil remaining in the still, reduced in volume but increased in viscosity, is known as "reduced oil." Such oils have considerable lubricating value, and are largely used on railways and for heavy machinery and gearing. The chief objection to them is the tarry matter which they contain, which stains the machinery and paint, and interferes with the free siphoning of the oil. In the manufacture of *cylinder oil*, suitable descriptions of petroleum are carefully reduced at as low a temperature as possible, *in vacuo*; and for petroleum jelly and *filtered cylinder oil* the highly viscous residues thus obtained are repeatedly filtered through animal charcoal kept sufficiently warm to maintain the oil fluid, until the required degree of transparency is obtained.

With the big demand for motor spirit, refiners find it doubly advantageous to treat crude oils of this type in special "topping" stills—which are steam-heated stills with dephlegmators—in order to obtain the petrol and leave a residue easily worked for lubricating oils.

(*c*) **Distilled Oils.**—When a complex mixture of hydrocarbons like the usual crude petroleums is submitted to distillation, various fractions, each suited by reason of its physical properties to certain uses, are obtained. The higher boiling fractions (or residues) alone have the necessary viscosity to serve as lubricants, and the manufacture of lubricating oils from crude petroleum and shale oil is a branch of a very important industry. The refiner's business is to separate the various products from the crude oil and purify them for use, and this he does by distillation and chemical treatment.

The lightest and most volatile hydrocarbons compose **Crude Naphtha**, from which motor spirit (gasoline, petrol) and solvent naphtha are obtained. These liquids, which are devoid of all lubricating property, form highly volatile and inflammable "spirits," used for driving motors, dry cleaning, making air-gas, and for solvent and other purposes; of these products the motor spirit is now by far the most important commercially. Hydrocarbons of higher boiling-point and specific gravity, which are still too fluid and volatile to be used for lubricating, compose the **Illuminating Oils** of commerce known as kerosene, petroleum, paraffin oil, etc. The heaviest and least volatile hydrocarbons are alone used for the manufacture of **Lubricating Oils, Paraffin Wax,** and **Petroleum Jelly.**

Distilled lubricating oils are obtained from the **Residuum,** which is the tarry residue remaining in the crude-oil stills after the naphtha and illuminating oils have been distilled over with more or less cracking. As a rule, the distillation of the crude oil is stopped at this stage, the residuum is withdrawn from the still and, after standing for some time to allow the fine particles of coke contained in it to settle out, is transferred to special stills called "tar-stills," in which the distillation for lubricating oils is conducted with superheated steam, or under reduced pressure, generally in separate factories devoted to the manufacture of lubricating oil. The detailed procedure adopted necessarily depends upon a variety of factors, such as the character of the crude oil, but a general scheme of distillation, such as is practised in some of the Pennsylvanian oil refineries, is shown below.

OUTLINE OF PENNSYLVANIAN OIL REFINING

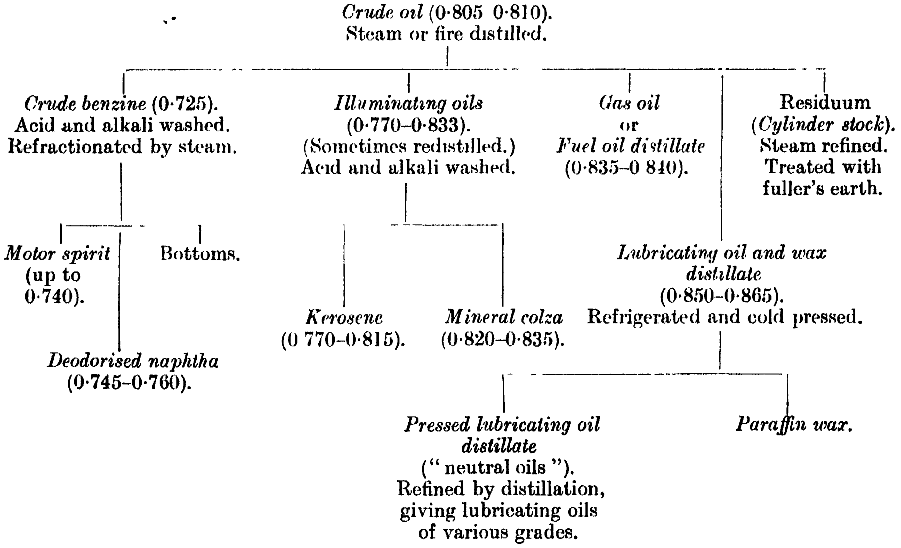

The various forms of plant used for the distillation of lubricating oils from petroleum and shale, though differing in detail, merely represent different methods of carrying out the general principles referred to above, and the yield and characters of the separate fractions obtained in different factories vary according to the nature of the raw material and the demands which the manufacturer has to meet. There has been a great improvement in the distillation plant used in oil refining, largely in the direction of improving the quality of the products and conserving the oil used as fuel. The thick-walled, cast-iron stills at first employed, in which the proper regulation of the temperature was impossible, have given place to stills of wrought iron or steel; the vertical form of still has been abandoned in favour of the horizontal, so as to increase the evaporating surface, and the stills are provided with low domes or short goose-necks in order to still further diminish the distance traversed by the heated vapours. Continuous systems of distillation have been widely introduced in most fields. In these plants, the crude oil is successively split into fractions by passing through a series of stills, each at a higher temperature than the preceding one, each still being provided with a pre-heater for the inflowing oil, so that the escaping oil-vapours on their way to the water-cooled condensers impart heat to the inflowing oil. The result of these improvements in the plant and processes has been a great improvement in the quality of mineral lubricating oils, to which must be attributed the rapid manner in which their use has extended during recent years.

In practice, however, the distillation, especially of the heavier fractions, is never a simple process of separation, as is proved by the fact that products are found in the distillates which do not exist in the original liquid. During the distillation, the heavier hydrocarbon vapours partly condense on the upper and cooler part of the still and fall back into the boiling liquid, while, in distilling the heavy oil, the boiling has to be very vigorous to keep up the stream of vapour issuing from the retort, which necessitates a strong fire and a high temperature at the bottom and sides of the retort. The prolonged and excessive heating to which the heavier hydrocarbons are thus subjected gradually splits them up, partly into permanent gases (marsh gas and hydrogen), partly into liquid hydrocarbons of lower boiling-point and viscosity, which distil over, and partly into tarry products which remain in the still. It has been found, in fact, that by setting the still so that the upper part is kept cool, and conducting the distillation slowly in order to promote condensation, or by distilling under increased pressure and so raising the boiling temperature of the liquid, the **destructive distillation** or "**cracking**" of the heavier hydrocarbons may be promoted to such an extent as to largely increase the natural yield of petrol and illuminating oil at the expense of the heavier fractions. Large quantities of crude petroleum, in which the residuum is not of special value for the preparation of lubricants, are distilled in this way in the United States, the illuminating distillate being increased from a normal proportion of about 50 per cent. to as much as 70 or 75 per cent., and the residuum reduced to as little as 6 per cent. The great demand for petrol has also led to the introduction on an extensive scale of cracking processes adapted to give the highest possible yield of this most valuable distillate.

According to Steuart, the hydrocarbons of petroleum are more readily split up than those of shale oil, and in Scotland cracking for the production of illuminating oil is not practised. A certain amount of destructive distillation is, however, necessary for the production of the paraffin wax which is such an important product of the shale oil industry. The quantity of crystalline wax obtainable from crude shale oil by direct freezing is much less than is obtained by freezing the distillates resulting from the distillation of the oil in such a way as to cause partially destructive changes.

Destructive distillation, which is so valuable in increasing the yield of illuminating oil and in the production of paraffin wax, has been found to be most detrimental to the quality of the lubricating oil, reducing the viscosity, lowering the boiling- and flash-points, and tending generally to the production of an inferior product. When, therefore, the primary object of the distillation is to obtain the lubricating oil with its viscosity, chemical stability, and other valuable qualities unimpaired, every care is taken to reduce the amount of *destructive* distillation to a minimum. With this object, the **Steam Refining Process** was introduced about 1870. In this process, which is largely used in the manufacture of lubricating oils from crude petroleum and petroleum residuum, a current of steam superheated to the required temperature (varying from 150° to 300° C.) is blown through the oil during the distillation, by which means the hydrocarbon vapours, instead of remaining in the still and undergoing decomposition, are swept rapidly forward into the condensing worm. Further improvements have been effected, especially in the distillation of the heavier hydrocarbons, such as form petroleum jelly and cylinder oils, by conducting the distillation in a partial **vacuum**, maintained by means of an exhaust ejector or other appliance connected to the end of the condensing worm. The boiling temperatures of the hydrocarbons are thus lowered, so that "cracking" is greatly reduced and the rapidity of the distillation is much increased.

American residuum contains a variable proportion of solid hydrocarbons, and varies accordingly both in consistency and in specific gravity; it is the source of all the paraffin wax obtained in the United States. On the other hand, the Russian ostatki produced at Baku is a more fluid oil having a uniform specific gravity of 0·90 to 0·91, and containing so little solid hydrocarbons as to yield practically no paraffin wax. Lubricating oil of a kind has been made in the United States by simply filtering the residuum through steam-heated filters, but the unstable character of the product, and the accompanying tarry matters, unfit it for any but the roughest purposes. Russian residuum is similarly employed, after separation of water and treatment with sulphuric acid. But the usual method is to refine the oil by distillation with superheated steam. In the United States the distillation is carried to dryness. The first 20 to 25 per cent. of the distillate is a very fluid oil of about 0·834 sp. gr., which is either returned to the crude oil tank or is refined as a special high flash-point burning oil. The oil that follows is lubricating oil, and contains the paraffin wax; it is either collected all together or in separate fractions. Just at the end of the process, when the bottom of the still is red hot, a thick, resinous product of light yellow colour and nearly solid consistency distils over, which is used as a lubricant for the necks of rolls, or, according to Sadtler, is added to paraffin oils to increase the density and lower the cold-test. About 12 per cent. of coke remains in the retort, which is used for the manufacture of electric light carbons. The paraffin oil, if collected all together, is washed first with acid and then with alkali, and is then reduced in temperature, which causes the paraffin to crystallise. The semi-solid mass is pumped into filter-presses, and the solid portion afterwards subjected to hydraulic pressure, the solid crystalline cake which remains being converted into refined paraffin wax. The fluid oil which drains from the presses is carefully redistilled and collected in separate fractions, yielding a variety of lubricating oils ranging in density and viscosity from the lightest and thinnest spindle oil to heavy machine oil and even cylinder oil, though cylinder oils are not usually made from residuum. If the paraffin oil, instead of being collected all together, is fractionated at the first distillation, then those fractions which contain the wax are separately treated for its recovery. Thus, according to Redwood, the second fraction following the oil of 0·834 sp. gr. (see above) may be collected so as to have a sp. gr. of 0·860–0·870, and may amount to 25 per cent. of the original residuum. This fraction may be subdivided by redistillation, or may be made into "*Neutral*" or "*Bloomless*" oil by cooling to separate the paraffin, filtering through bone-black to remove colour and odour, and exposing to the sun and air in shallow tanks, or treating with nitric acid or nitro-naphthalene or in other ways to remove fluorescence or "bloom." "Neutral oil" has a very low viscosity, and is largely used for the adulteration of animal and vegetable oils, for which reason it is debloomed so as to remove the fluorescence which would betray its presence. The distillate following the neutral oil is the "stock" for engine oil, and the percentage is determined (with a corresponding inverse variation in the proportion of the second fraction) by the use to which the product is to be put. For heavy machine oil the proportion is reduced so that a distillate of sp. gr. 0·928 to 0·933 may be obtained, and after the paraffin has been separated the viscosity is sometimes still further increased by distilling off some of the more volatile constituents by means of superheated steam and filtering the "reduced" oil through charcoal. In the treatment of paraffin base oils, the completeness with which the wax is removed is the main factor in the production of low cold-test lubricating oils.

Chemical Treatment.—Petroleum distillates contain unsaturated hydrocarbons, resinous and asphaltic substances, and other impurities, so that they have an unpleasant odour and are dark in colour. Decolorisation is now commonly effected by dry fuller's earth, through which the oil is percolated. Heavy cylinder oils require heating. The decolorisation is a physical action (adsorption), but at the same time it is believed that polymerisation of unsaturated hydrocarbons occurs.

Chemical treatment with strong sulphuric acid, followed by caustic soda, is commonly employed with all distillates. Tar products, resinous substances, etc., are dissolved, unsaturated hydrocarbons polymerised or converted into sulpho-acids. The subsequent soda treatment removes any remaining traces of free mineral acid and any petroleum acids (naphthenic acids), phenols, etc., and neutralises the sulpho-acids found during the acid treatment.

TABLE XXXIX.—FRACTIONAL DISTILLATES FROM RUSSIAN RESIDUE.

Fraction.	Description.	Distilling at °C.	Per Cent.	Specific Gravity.	Colour.
1st	*Solar or Gas Oil,*	150–170	10–12	·840–·860	Pale yellow.
2nd	*Light Spindle Oil,* .	170–200	12–15	·870–·880	Yellow.
3rd	*Heavy Spindle or Light Machine Oil,*	200–250	8–10	·895–·900	Yellow.
4th	*Engine Oil,* . .	250–300	30–33	·908–·912	Reddish-yellow.
5th	*Cylinder Oil,* . .	300–320	10–12	·915–·920	Red.
Residue	*Goudron,* . . .	...	12–15	·950	Brown black.

It appears certain that some of the polynuclear, unsaturated hydrocarbons play an important part in producing the physical properties upon which lubricating value is dependent, and that over-treatment with strong acid may therefore impair the lubricating quality of an oil. The chemical changes which take place are by no means fully understood. Secondary reactions occur, certain of the hydrocarbons being very liable to undergo oxidation with formation of acid products, especially during the alkaline treatment. Great care and attention are, therefore, needed to produce the most highly refined oil, which is clear and bright, contains neither acid nor alkali, and does not become turbid on standing.

Previous to the chemical treatment of the lubricating oil distillates, they are freed from mechanically mixed water by settling, and the last traces of moisture are got rid of by heating the oil in tanks fitted with steam coils. The dried oil is then thoroughly agitated with concentrated sulphuric acid, the proportion of acid varying from 4 to 12 per cent., according to the strength of the acid and the amount of impurity in the oil. After thorough settling, the clear oil is drawn off, agitated with a solution of caustic soda, and again allowed to settle; it is then well washed with warm water, allowed to rest until clear, and finally dried by being heated in shallow pans provided with steam coils until the oil is bright. Sometimes the oil after being treated with acid is pumped into a still containing a solution of caustic soda amounting to from 2 to 4 per cent. of the oil, and is redistilled from the soda, by which process free acid and sulphonates are more perfectly removed and the oil is improved in colour.

(*d*) **Russian Oils.**—The manufacture of lubricating oils from ostatki was commenced by V. I. Ragosine in 1876, and two years later the Russian oils were first introduced into England. Up to that time naphtha and illuminating oil were the only products manufactured from the crude Caucasian petroleum, and the ostatki was either burned as fuel or entirely wasted. The general characters of the heavier products from Russian oil are given in Table XXXIX.

According to O. Aschan, crude Balachany oil yields 4 per cent. benzine (0·770) and 33 per cent. kerosene (0·825). After removal of these fractions, 90 per cent. of the ostatki is used as fuel, only some 10 per cent. being worked for gas oils and lubricants. Distillation with superheated steam yields—

Solar or gas oil . . .	0·870–0·875	30	per cent.
Light and heavy spindle oil .	0·875–0·905	7·5	„
Machine oil	0·905–0·912	24	„
Light cylinder oil . . .	0·912–0·920	1·5	„
Goudron (tar) . . .	0·920–0·950	35	„

The heavy tar may be put through the acid and alkali refining and then steam distilled to give heavy cylinder oils (viscosines).

"*Solar Oil*" is too fluid for lubrication, and is used either as a heavy illuminating oil or for making oil-gas. "*Mixing Oils*" are also prepared from solar oil, the chief use of which is for purposes of adulteration (*Redwood*).

"*Goudron*" when cold is almost solid. It is used as fuel and for other purposes. Sometimes a lubricating grease is made from it, of the nature of petroleum jelly, by mixing it with about one-third solar oil and very gradually heating the mixture in a still to 180°–200° C. Distillation is then started by passing in superheated steam. At first a fluid oil comes over, but soon the distillate begins to partially solidify on cooling, the proportion of solid gradually increasing until the whole solidifies. This distillate is collected separately, until about three-fourths of the contents of the still have come over.

All the *lubricating oil distillates* have a dark colour and a strong odour. Paler coloured, odourless oils are produced from them by chemical treatment followed by redistillation, as in the case of the American oils, but as the Russian oils contain no paraffin wax the refrigerating process is, of course, omitted.

(*e*) **Shale Oils.**—Crude shale oil yields on distillation the same products as crude petroleum, viz.—naphtha, illuminating oil, gas oil, lubricating oil, and paraffin wax. The methods of separating these products and obtaining them in a pure state are the same in principle, viz.—fractional distillation, followed by chemical treatment of the distillates; but the process is more complicated. Shale oil is subjected to a large number of separate distillations and treatments in order to facilitate the separation of the paraffin wax, of which the crude oil yields about 12 per cent., while American paraffin-base petroleum yields only about 2 per cent., and Caucasian petroleum none. The lubricating oils from shale are of low viscosity (spindle oils), and are all *distilled oils*, there being no products corresponding to the natural and reduced oils prepared from American petroleum.

For further information regarding the manufacture of mineral lubricating oils, drawings of the plant, etc., the reader is referred to the standard treatise on the subject by Redwood (4th edition, 1922).

III. Nomenclature of Mineral Lubricating Oils.

The following notes from a paper read before the Society of Chemical Industry by A. E. Dunstan and R. W. L. Clarke[1] conveniently summarise the products of the mineral lubricating oil industry and their trade descriptions.

Pale Oils.— Pale oils are distillates which have been acid-treated and soda-washed or filtered to the necessary degree of refining or colour. They are usually of light to medium viscosity and are employed for the lubrication of rapidly moving machinery.

Neutral Oils.— Neutral oils are distillate oils refined by filtration through fuller's earth or some similar absorbent and are often sun-bleached, acid treatment being avoided as a rule. Good demulsibility is a characteristic of well-refined neutral oils.

Dark Lubricating Oils.- Dark lubricating oils are residues of crude oils, or concentrates from the redistillation of lubricating oil base, or mixtures of residue oils with oils of lower viscosity. This class comprises the cheap lubricants for rough purposes, such as wagon axles.

Low Setting Point Oils.--This class of oils is manufactured from non-paraffinoid crude oils, and is of value for lubrication at low temperatures, such as are experienced in refrigerating machines.

Red Oils.---Red oils are acid-treated distillate oils which are finished by a soda wash, or by a clay treatment after the acid tar produced by the sulphuric acid treatment has been allowed to settle. The majority of the medium and heavy viscosity oils used for general purposes are of this class.

Dark Cylinder Oils.—Dark cylinder oils are undistilled residues which remain in the stills after the steam distillation of non-asphaltic base crude oils.

Filtered Cylinder Oils. --Filtered cylinder oils are made from dark cylinder oils by filtration through ignited fuller's earth. Both dark and filtered cylinder oils are sometimes compounded with 3-10 per cent. of acid-free tallow oil in order to increase their oiliness. Filtered cylinder oils are used with oils of lower viscosity to produce oils of suitable viscosity for internal combustion engines, air compressors, etc. The oil in each class is further graded as light, medium, heavy, and extra heavy according to viscosity.

IV. Properties and Composition of Mineral Lubricating Oils.

Mineral lubricating oils are classed commercially as "pale," "red," and "dark." The pale oils and red oils are transparent or translucent, and present a variety of shades of yellow and red. The dark oils are opaque, and are either greenish- or brownish-black. Most mineral oils, unless they have been "debloomed" by chemical treatment, are (in distinction to animal and vegetable oils) fluorescent. The smell and taste, although usually slight, are also characteristic.

The specific gravity usually ranges from about 0·860 to 0·940, though oils of lower and higher sp. gr. are occasionally met with. The boiling-point is high, usually above 600° F. (315·5° C.) in the case of refined distilled oils. The closed flash-point ranges, with few exceptions, from 300° to 600° F. The cold-test or setting-point varies, and depends partly upon the proportion of solid hydrocarbons present. Paraffin base oils have the highest setting-points, and usually do not remain fluid below 25° Fahr. Scotch shale oils, which are rich in paraffin, become solid at about 32° F. Russian oils and American asphaltic base oils have the lowest setting-points and may remain fluid and transparent, though very viscid, below zero Fahr.

---

[1] *Jour. Soc. Chem. Ind.*, **45** (1926), 691.

The lubricating oils obtained from petroleum present a much greater range of viscosity than the fatty oils. The thinnest are more fluid than sperm oil; the thickest are more viscous than castor oil. Scotch shale oils are only met with among the oils of low viscosity. Reference to the tables on pp. 230–233 will show how slight is the connection between specific gravity and viscosity. Among oils of a given specific gravity, natural and reduced oils are more viscous than refined oils; and among the latter, American asphaltic base oils and Russian oils, at low and moderate temperatures, are more viscous than American paraffin base oils. Mineral oils lose viscosity with rise of temperature more rapidly than the fatty oils; but if the curves of absolute viscosity on pp. 229, 234, and 236 be studied, it will be seen that this difference becomes much less marked at temperatures above 100° F. (or 150° F. in the case of cylinder oils). The loss of viscosity is greater the more viscous the oil; and the higher the temperature above the normal, the more nearly do all oils approximate to one another in viscosity. It is not entirely owing to the greater influence of temperature on the viscosity of mineral oils that they are less perfect lubricants than the fatty oils, but partly owing to the fact that they are deficient in the property of "oiliness." The latter statement does not, perhaps, apply to all mineral oils or to all conditions, since Profs. Sibley and Mabery have obtained results from frictional tests showing better lubrication with pure mineral lubricating oils than with fatty oils or blended oils. Kingsbury, also, found a mineral cylinder oil of high viscosity superior in "body" or oiliness to lard oil (see p. 433).

Although the chemical composition of petroleum has been the subject of an immense amount of research, attention has chiefly been directed to the naphtha and illuminating oil fractions, whilst those of higher boiling-point, from which lubricating oils are prepared, have been comparatively little studied. Our present knowledge of the subject is derived mainly from the researches of Engler, Kharitchov, Holde, Nastyukov, Mabery, and Marcusson. A digest, with reference to the most important researches to the date of their paper, is contained in a paper by A. E. Dunstan and F. B. Thole, read before the Institution of Petroleum Technologists in 1918,[1] and in further notes by the same authors communicated to the British Association in 1920,[2] and the American Chemical Society in 1922.[3] These authors consider it proved beyond doubt that the high boiling fractions of all crude petroleums from which lubricating oils are prepared are complex mixtures containing but a small percentage of paraffin hydrocarbons of the formula C_nH_{2n+2} and consisting chiefly of compounds whose formulæ range from C_nH_{2n} to C_nH_{2n-8}. "In no case," say Dunstan and Thole, "has the chemical constitution of a component of a lubricating oil been established, but the chemical behaviour of these oils indicates that among the components are unsaturated hydrocarbons (possibly open-chain, but more probably naphthenic and polynuclear, or perhaps of both types), saturated hydrocarbons (naphthenic and probably to some extent polynuclear, but not to any appreciable extent paraffinoid), and aromatic hydrocarbons (to an unknown and possibly a limited extent), together with small amounts of sulphur—and oxygen—containing compounds, the latter of which can be isolated and are probably the principle cause of gumming." These authors state that unsaturated compounds constitute between 20 per cent. and 40 per cent. of most lubricating oils, and are in part removed from the oil by agitation with concentrated sulphuric acid.

Some important work has been published by B. T. Brooks and Irwin

---

[1] *Jour. Inst. Petro. Tech.*, **4** (1918), 191–228.
[2] See *Jour. Inst. Petro. Tech.*, **7** (1921), 417–421
[3] *Chem. and Met. Engineering*, **28** (1923), 299–302.

Humphrey[1] throwing considerable doubt upon analyses made by acting upon mineral oils with sulphuric acid. The assumption that, in the refining of petroleum distillates by treatment with sulphuric acid, the olefines are polymerised by the acid to tars and removed in the acid oil is shown to be erroneous. None of the mono-olefines studied by the authors yielded tars. What really happens in the refining of the lubricating oil fractions appears to be that the olefines are converted into polymers, which are quite stable towards the acid, and instead of being removed in the acid sludge as tars, esters, or alcohols, they remain in the refined oil and increase its viscosity. Thus, contrary to the usual assumption that refined, viscous petroleum lubricating oils consist exclusively of naphthenes and polynaphthenes, it appears probable that they contain relatively large percentages of unsaturated hydrocarbons, as is indeed indicated by the iodine values of these oils, and as the iodine values of the hydrocarbons are reduced by polymerisation, a comparatively low iodine value may indicate quite a large proportion of these unsaturated bodies. The tars formed in the refining process are believed to be due to the presence of diolefines, or perhaps other substances, but are not due to mono-olefines, and as showing how the polymers formed from these latter may influence the viscosity of the oil, the authors mention that the di-polymer, $C_{24}H_{48}$, formed almost quantitatively by the action of sulphuric acid on β-methyl-β-undecene, $C_{12}H_{24}$, has a viscosity equal to that of light machine oil, and the polymers of unsaturated hydrocarbons prepared from cetyl alcohol and myricyl alcohol were quite viscous oils, very nearly identical in their common physical properties with the lubricating oils of corresponding molecular weight. In the concluding paragraph of this paper, Messrs. Brooks and Humphrey make the remark that at present there is no method for the quantitative determination of the unsaturated hydrocarbons in petroleum oils. Fuming sulphuric acid cannot be used, as it attacks the saturated hydrocarbons.

It may be mentioned here that Kraemer and Spilker[2] have prepared synthetic hydrocarbons resembling in their physical and chemical characters mineral lubricating oils, by the condensation of methylbenzenes with cinnamene or with allyl alcohol in the presence of sulphuric acid. The product formed from pseudo-cumene and allyl alcohol had the composition $C_{21}H_{28}$ and was probably dimethyldicumylmethane; it boiled above 300° C., and in the viscometer gave, at 15° C., the value 775 (water=1), whilst the best Russian lubricating oil gave, in the same apparatus, the value 40. Kraemer and Spilker regard these bodies as the "viscosity carriers" of mineral lubricating oils, and have proved that their viscosity increases rapidly with the number of methyl groups in the molecule. Brooks and Humphrey's observations have been confirmed by G. L. Oliensis,[3] who has shown that whilst mono-olefines in the refining process give oil-soluble esters which remain in the oil, diolefines are converted into an insoluble sludge, and if this is not completely separated, oil-soluble colloids are formed on subsequent neutralisation of the acid, which lead to the formation of water-in-oil emulsions.

Dunstan and Thole consider it doubtful whether lubricating oils contain more than a small percentage of true olefine hydrocarbons. Their reluctance to hydrogenation in presence of a catalyst by the Sabatier method, and their abnormal behaviour when iodine values are determined by the Wijs reagent (see p. 331), tends to show that the unsaturated hydrocarbons, which are attacked by sulphuric acid and which, as Nastyukov has shown, combine with formaldehyde to form the insoluble compounds termed "formolites," belong

---

[1] *Jour. Amer. Chem. Soc.*, **40** (1918), 822.

[2] *Berichte*, **24**, 2785.

[3] *J. Ind. and Eng. Chem.*, **15** (1923), 690.

to closed ring systems which are more difficult to rupture than the normal olefines. Nothing appears to be known regarding the possible presence of aromatic compounds. Resinous components are present to a small extent and are a cause of gumming. The paraffin hydrocarbons are well known to be poor lubricants, and there is ample evidence that the unsaturated hydrocarbons are the most valuable constituents of mineral lubricating oils. Dunstan and Thole conclude that the oil refiner should, therefore, carefully regulate the treatment given, so as to remove as far as possible the oxygenated compounds and the more highly reactive of the unsaturated hydrocarbons, which are chiefly responsible for gumming and carbonisation, while destroying only a minimum of those more stable unsaturated hydrocarbons whose presence in the oil is an asset.

Mabery and Matthews[1] in 1908 published a research showing the relation between the chemical composition, viscosity, and lubricating value of individual hydrocarbons prepared from Pennsylvania crude petroleum and carefully fractionated by distillation so as to have the approximate composition C_nH_{2n+2}, C_nH_{2n}, C_nH_{2n-2}, and C_nH_{2n-4}. Viscosities were measured by means of the Ostwald viscometer, and expressed in terms of the viscosity of water taken as unity at the temperature of measurement. In observations on a number of saturated hydrocarbons ranging in composition from C_7H_{16} to $C_{18}H_{38}$, the viscosity was found to increase in a somewhat irregular manner with each increment of CH_2 in the ascending series, the change becoming greater as the molecular weight increased. In comparing together hydrocarbons of different series, but having the same boiling-point, it was found that the more unsaturated the hydrocarbon, and the lower the percentage of hydrogen, the higher the viscosity. This is shown in Table XL., and it will be noticed that both specific gravity and viscosity increase with decreasing percentage of hydrogen, also that the difference in viscosity is greater between the hydrocarbons C_nH_{2n+2} and C_nH_{2n-2} than between the hydrocarbons C_nH_{2n+2} and C_nH_{2n}.

TABLE XL.

Series	Boiling-point (50 mm.).	Sp Gr. (Water=1 000).	Specific Viscosity at 60° C. (Water at 60°=1).
C_nH_{2n+2}	294°–296°	0·781	10·88
C_nH_{2n-2}	294°–296°	0·841	21·23
C_nH_{2n+2}	274°–276°	0·775	8·51
C_nH_{2n}	274°–276°	0·835	15·63

It was also found that by adding to a Pennsylvania distillate of the composition C_nH_{2n-2} only 2·35 per cent. of solid paraffin hydrocarbons (C_nH_{2n+2}) of the same boiling-point, which was as much as the oil would dissolve at the temperature of the test (20°), the specific viscosity was reduced from 88·16 to 82·30. In another experiment, 2·5 per cent. of paraffin reduced the viscosity of a distillate composed of C_nH_{2n} hydrocarbons from 37·57 to 36·39. At a higher temperature (60° C.) the effect of the paraffin was the same, though much less marked.

Incidentally, it is shown that in comparing together oils from different crude petroleums, neither specific gravity nor boiling-point is any guide to the viscosity. Thus, a Pennsylvania distillate of specific gravity 0·8687 had a specific viscosity of 88·16, whilst two South American distillates of specific gravity 0·884 and 0·896 had respective specific viscosities of only 8·14 and 19·57.

---

[1] *Jour. Amer. Chem. Soc.*, **30** (1908), 992.

But these latter oils had comparatively low boiling-points, and if compared with Pennsylvania distillates of the same boiling-point the South American oils had much the higher specific gravity and viscosity.

The "lubricating value" of the hydrocarbons was measured by Professor Benjamin's machine (p. 454), which showed that the "durability"—*i.e.* the power to lubricate after the supply of oil has been cut off- increases, as does the viscosity, with the decrease in hydrogen. Of the hydrocarbons compared, that of the composition C_nH_{2n-4} seemed to give the lowest coefficient of friction, as well as the greatest durability. It proved equal to sperm oil in reducing friction, and superior to castor oil and two blended cylinder oils in durability.

The authors conclude that of the hydrocarbons in petroleum from which lubricating oils are prepared, the series C_nH_{2n+2} has a low lubricating value. Lubricating oils prepared from Pennsylvania petroleum consist for the most part of the series C_nH_{2n} and C_nH_{2n-2}; those from the heavier oils consist largely of the series C_nH_{2n-2} and C_nH_{2n-4}.

In a later research,[1] Mabery has studied the hydrocarbons in petroleum which cannot be distilled without decomposition, viz. those boiling above 300° C. *in vacuo.* He used for this purpose five typical crude oils, viz. two paraffin base oils respectively from Cabin Creek, W. Virginia, and Rosenbury, Pa., a natural lubricant petroleum from Mecca, Ohio, a heavy Southern asphaltic base crude from Sour Lake, Texas, and a Russian oil from Baku. The portion boiling up to 300° C. at 30 mm. was first distilled off, and the two Appalachian oils were freed from paraffin wax. The residual oil from each "crude" was then separated by repeated fractional solution in hot alcohol-ether into a number of fractions, each of which was subdivided by further fractional solution into a so-called "D" fraction, dissolved by the hot solvent, and a so-called "H" fraction left undissolved. The sp. gr., molecular weight, and percentage composition of each of the 13 to 15 fractions from each oil were determined.

In the two Appalachian oils from Cabin Creek and Rosenbury, the D fractions were all amber coloured lubricating oils composed, respectively, of hydrocarbons of the series C_nH_{2n-4} and C_nH_{2n-8} (sp. gr. 0·8755 to 0·8855). The Mecca petroleum D fractions were also composed of C_nH_{2n-8} hydrocarbons, but higher in sp. gr. (0·8945 to 0·9171). In the Texas petroleum, the hydrocarbons in the D fractions all belonged to the series C_nH_{2n-12} (sp. gr. 0·9408 to 0·9643) and in the Baku petroleum to the series C_nH_{2n-10} (sp. gr. 0·9186 to 0·9288); the heaviest D fractions of both these petroleums were asphaltic and sticky and not lubricants.

The H fractions of the two Appalachian oils were lubricants to the heavy ends (sp. gr. 0·8721 to 0·9079) and the hydrocarbons included the series C_nH_{2n-8} to C_nH_{2n-16}, but mainly C_nH_{2n-8}. In the other three petroleums the H fractions included series of hydrocarbons ranging from C_nH_{2n-8} to C_nH_{2n-20}, but the heavy ends were tars or solid asphalts and not lubricants.

No naphthene (C_nH_{2n}) hydrocarbons were isolated from any of these petroleums in this research, and no hydrocarbons of the series C_nH_{2n-2}; they are to be found in the lighter distillable fractions, from which illuminants and the lighter lubricants are prepared. The author concludes that a well-defined distinction exists between the lubricant and asphaltic hydrocarbons in petroleums and that the higher specific gravity of the Texas and Baku lubricant hydrocarbons is due to their inherent structure, which is altogether different from the lubricant structure of the Appalachian oils. Carboxylic acids or

---

[1] "The Lubricant and Asphaltic Hydrocarbons in Petroleum," *Jour. Ind. and Eng. Chem.*, **15** (1923), 1233–1238.

esters appear to be present in all varieties of American petroleum ; traces were found in the Appalachian oils and up to 2 per cent. in the Sour Lake, asphaltic oil. The iodine numbers show that the unsaturated lubricating hydrocarbons belong to the closed chain series. None of the D hydrocarbons gave the formolite reaction, and the H hydrocarbons of the Texas and Russian oils gave variable mixtures of indefinite composition.

Wilson and Allibone[1] have investigated the composition of the lubricating oil constituents of a crude Burma petroleum and of a lubricating oil distillate obtained from the same oil in the refinery. By agitation with successive quantities of a solution of SO_2 in acetone at room temperature, each of these oils was separated into an insoluble portion composed of the less unsaturated and a soluble portion composed of the more unsaturated hydrocarbons. The more unsaturated soluble portion ultimately obtained from each oil had the same average series formula, C_nH_{2n-18}, affording evidence that the oil which had been twice distilled, the first time under refinery conditions, had not been materially altered in constitution by the process. It was found that the chemical stability of the lubricating oil, as indicated by the oxidation test, was increased progressively as the more unsaturated hydrocarbons were extracted by the solvent, and the viscosity was progressively lowered, but the viscosity-temperature gradient of the oil became less steep. The soluble portion of the oil was exceedingly viscous at ordinary temperatures, but rapidly lost viscosity with rise of temperature ; it was also very unstable chemically, and deposited asphalt on standing untouched, although the oil from which it was obtained, *i.e.* the entire lubricating oil fraction, composed of saturated and unsaturated hydrocarbons, did not deposit asphalt. It is of interest to note that the lubricating oil constituents of Hardstoft petroleum (Derbyshire, England), which were also investigated by Wilson and Allibone, were found to consist mainly of C_nH_{2n-4} hydrocarbons, an exceptionally low degree of unsaturation, such as Mabery found in the D fractions of only one of the American lubricating oils examined by him in the later research referred to on p. 136.

It is evident from the foregoing, that much more research is required to elucidate the chemical nature of the constituents of mineral lubricating oils and the methods of refining the crude oils which will produce the best lubricants from them.

Mineral lubricating oils are unsaponifiable, which enables them to be easily separated from the fatty oils in the process of analysis. The tendency which they possess to oxidise and develop organic acidity is so much less, and so different in nature from that possessed by vegetable and animal oils, that they do not " gum " or corrode bearings, and if carefully refined, so as to be free from mineral acid and from certain reactive and undesirable components, they undergo but little change in use at ordinary atmospheric temperatures, and if occasionally filtered to remove suspended impurities they can be used for long periods.

Mineral oils, owing to their non-oxidisable character, are also incapable of igniting spontaneously under normal working conditions, and when mixed in sufficient proportion with vegetable and animal oils, they reduce the risk of fire from this cause.]

V. Lubricating Oils from Low-Temperature Tar.

In Germany, lubricating oils are being produced from low-temperature tars derived from brown coal, and, to a less extent, from gas coal. By the

---

[1] *Jour. Inst. Petro. Tech.*, **11** (1925), 180–190.

carefully regulated distillation of these materials, so that the maximum temperature does not exceed 450°–500° C., very fluid tars, of specific gravity about 1·0 and practically free from aromatic hydrocarbons, but yielding "paraffinoid" hydrocarbons, with a fair quantity of paraffin wax, are obtained. This raw product has been termed "primary tar" ("*Urteer*") by F. Fischer, who, with several colleagues, has investigated its characters and commercial possibilities. (*The Conversion of Coal into Oils,* Franz Fischer: English translation by R. Lessing.) In general, the lubricating oils have been inferior to petroleum products, but Fischer ascribes this to bad refining. It appears certain that the production of satisfactory lubricating oils from these sources requires a more delicate technique than in the case of petroleum or shale oils. Distillation at ordinary pressures leads to much decomposition of the viscous oils. At the Deutsche Erdöl A.-G. Works the tar is distilled in a bench of eight continuous stills, a vacuum of 680 mm. being maintained, and lubricants from brown-coal tar are being marketed.

F. Fischer and Gluud obtained from a gas coal 10 per cent. by weight of primary tar, and from this tar 15 per cent. of non-viscous oils and 10 per cent. of viscous oils. This was equivalent to about 1 per cent. of "highly viscous oil" by weight on the gas coal.

After removal of the wax from the latter, oils described as deep golden red and having a green fluorescence were obtained.

The properties of three of these distillates were :—

	a.	*b.*	*c.*
Flash-point (° C.), . .	152°	182°	194–195°
Setting-point (° C.), . .	−12°	−5°	+4·5°
Viscosity (Engler degrees)—			
at 20° C., . .	7·2	19·2	..
„ 50° C., . .	1·73	5·4	28·3
„ 100° C. . .	..	..	1·9

Fischer considers hydrogenation of coal oils would effect considerable improvement, but points out two practical difficulties: firstly, at the necessary temperature (over 300° C.) decomposition into non-viscous products would occur; and, secondly, if catalysts are used, as in the hydrogenation of fatty oils, they will soon become poisoned by sulphur compounds.

VI. Synthetic Lubricants.

R. H. Brownlee[1] has patented a method of manufacturing hydrocarbon oil of high flash-point and viscosity and low cold test, suitable for lubrication, by polymerisation of unsaturated hydrocarbons by agitating them with a catalyst, preferably at 200–400° F. As catalysts, anhydrous aluminium chloride, or a halide, or reagents which produce a halide in the nascent state, are used. The oil, after treatment, is washed and distilled with steam. The distillates include products having the flash-points of naphtha and kerosene and a variety of lubricating oil fractions. We are informed that a synthetic lubricant made by this process with a setting-point below −60° C. has been used by the U.S. Air Force for machine guns under super-Arctic flying conditions.

---

[1] *Soc. of Chem. Ind. Annual Reports,* v. (1920), p. 85; see also vi. (1921), p. 71.

B.—FATTY OILS AND FATS.

Sources, Composition, and General Properties.

Fatty oils, also called "fixed" oils because they are not volatile without decomposition, are found ready formed in certain tissues of animals and plants. They differ from the mineral oils in containing oxygen as an essential constituent, the proportions ranging from 9·4 to 12·5 per cent. The distinction between fatty oils and fats is only a matter of temperature. All fatty oils become fats at low temperatures, and all fats become oils at 150° F. The temperature at which each individual fatty oil or fat solidifies or melts is not sharply defined, for the reason that these bodies are mixtures of substances of different melting-points. This subject is discussed in further detail in Section G of Chapter VII.

The fat of terrestrial animals is found in the cells of the adipose tissue, and in the case of marine animals in the blubber and in some cases the liver. The oils of plants occur mostly in the seeds or fruit. Each of the different oil-yielding plants and animals furnishes its own peculiar oil or oils; hence a considerable variety of fatty oils and fats exists.

The fatty oils and fats are removed from the vegetable or animal tissues with which they are intimately associated by one of the three following processes:—

1. "Rendering," or melting out.
2. "Expression," in hydraulic presses. This may be done either cold or hot.
3. "Extraction," by solvents.

Most fats and oils of animal or fish origin are obtained by rendering. Primarily, the idea is to release the fat from the membraneous cells by rupture of the cell walls by heating. Dry heat or steam heat may be employed. Sometimes dilute sulphuric acid is used, and occasionally an alkaline solution. The latter removes free fatty acids, but troublesome emulsions are likely to be formed.

Removal of oils, particularly from seeds, is usually done by pressing the crushed seed, after first removing the husks (decorticating). By cold expression the oil obtained is of a high grade, but the yield is lower. By hot pressing either the original crushed seed or the remains from the cold pressing, more oil is obtained, but the heat frequently causes albuminoids, gums, colouring matter, etc., to dissolve, and the expressed oil is darker in colour and has not such good characters as the cold-expressed oil. This is well illustrated by olive oil; the high-grade, cold-expressed "salad" oil being in striking contrast to the dark green, unpleasant smelling, second ("hot") expressed oil used for general purposes.

Solvent extraction has become very general, for usually the extracted oil is of high grade, since mucilage and colouring matters are often but slightly soluble in the oil solvent, and very little oil is left in the treated material. The solvent used must have a fairly low boiling-point to enable the extracted oil to be freed from it, and must, for most purposes, not leave behind any odour or impurity. Carbon disulphide, light solvent spirit (petroleum benzine or "petrol"), and benzol are used, but with these very inflammable liquids fire risk is fairly high, and non-inflammable, volatile solvents have been introduced. These are mainly chlorine derivatives of the hydrocarbons, such as carbon tetrachloride (CCl_4), dichloroethylene ($C_2H_2Cl_2$), trichloroethylene (C_2HCl_3), and tetrachloroethane ($C_2H_2Cl_4$).

The crushed seed is either treated with the solvent by percolation, or in plants working on the principle of the laboratory Soxhlet extractor. The solvent is removed by distillation and condensation.

For many purposes, the crude fat or oil requires treatment for the removal of impurities. Albuminous substances, gums, and resins may be present in a colloidal condition, and usually more or less free fatty acids. Very careful treatment (to avoid carbonisation and a dark colour) with a small quantity of strong sulphuric acid, or with caustic soda, the latter being more general, is given. Great care is necessary with the alkali, to avoid as far as possible saponification and the formation of troublesome emulsions. Coagulation of colloid bodies by means of solutions of salts, such as ammonium sulphate, is also practised. Colouring matters may be removed by adsorption by decolorising powders, such as decolorising carbons, Florida earth, china clay, etc., and these also serve to clarify the oil. These also frequently act as deodorisers. Bleaching by oxygen—either directly by blowing air through the hot oil, or by the use of bleaching agents, such as "bichromate bleach"—is sometimes necessary.

Animal oils are usually either colourless or yellow; vegetable oils are of various shades of yellow and green, the green colour being due to the presence of *chlorophyll*, which is characteristic of this class of oils. Each kind of oil has usually a distinctive odour by which it ca [illegible] ntified. Fatty oils very rarely present a fluorescent appearance, [illegible] lterated with mineral oil.

In specific gravity the fatty oils range from al [illegible] ·968 at 60° F. Sperm oil is the least viscous, castor oil the most. [illegible] il has its own peculiar viscosity, which varies but little. T [illegible] tilled without decomposition, the so-called "boiling" of f [illegible] e to the escape of gases produced by destructive distilla [illegible] difying-points of fatty oils, and the melting-points of fats, vary [illegible] (see pp. 268 and 273).

A fundamental difference between [illegible] oils and mineral oils exists in their behaviour towards atmospheric oxygen. Mineral oils are almost indifferent to oxygen, but all the fatty oils combine with it,[1] and many of them undergo, as a result of the oxidation, changes which convert them sooner or later into solid elastic varnishes. The oils which behave in this manner are called "drying oils," and a few which oxidise and dry most rapidly (notably linseed oil) are used as vehicles for paint. Lubricants are selected from the "non-drying" or less strongly drying oils, the chief of which are olive, rape, and castor among vegetable oils, and tallow, lard, neatsfoot, and sperm among animal oils.

All fatty oils are composed of fatty esters, formed by the union of alcohol radicles with fatty acid radicles. The alcohol radicle occurring in the vegetable oils and in most of the animal oils is the trivalent radicle *glyceryl*, C_3H_5, the radicle of glycerol or glycerin ($C_3H_5(OH)_3$), and its esters, known as *glycerides*, may be represented by the formula $C_3H_5R_3$, in which R represents the fatty acid radicle. Usually several esters occur together. Those most frequently met with are triglyceryl stearate or tristearin, $C_3H_5(C_{17}H_{35}.CO.O)_3$, triglyceryl palmitate or tripalmitin, $C_3H_5(C_{15}H_{31}.CO.O)_3$, and triglyceryl oleate or triolein, $C_3H_5(C_{17}H_{33}.CO.O)_3$. Stearin and palmitin predominate in the solid fats, olein in the fluid oils. Olein is the chief constituent of many of the best known lubricants, such as lard, tallow, neatsfoot, and olive oils. Until recently, natural oils and fats were believed to be mixtures, exclusively of simple triglycerides such as the above, in which all the acid radicles contained

---

[1] In consequence of this property, cotton waste and similar fibrous material when saturated with many of the fatty oils, especially those of the drying class, are liable to heat and undergo spontaneous ignition (see p. 368).

in the molecule are alike; but recent researches have proved that mixed triglycerides also occur, such as stearo-dipalmitin, palmito-distearin, oleo-palmito-stearin, etc.

Allied to the fats are the *waxes*, which are esters of mono- and di-hydric alcohols. Thus, cetyl palmitate or cetin, $C_{15}H_{31}.CO.O.C_{16}H_{33}$, derived from cetyl alcohol ($C_{16}H_{33}.OH$), is the chief constituent of spermaceti, and myricyl palmitate or myricin, $C_{15}H_{31}.CO.O.C_{30}H_{61}$, from myricyl alcohol ($C_{30}H_{61}OH$), is the chief ingredient of beeswax. Sperm and bottlenose oils belong to this group, and are therefore known as liquid waxes, since the esters composing them are not glycerides, but are derived from monohydric alcohols.

All fatty esters, by *hydrolysis*, are split up into alcohols and free fatty acids. The change can be effected in several ways: by heating with water under pressure, by superheated steam, and by heating with sulphuric acid. In the case of olein, the complete change is represented by the following equation :—

$$\begin{array}{ccccccc} C_3H_5(C_{17}H_{33}.CO.O)_3 & + & 3H.OH & = & C_3H_5(OH)_3 & + & 3C_{17}H_{33}\,CO.OH. \\ \text{olein} & + & \text{water} & = & \text{glycerol} & + & \text{oleic acid.} \end{array}$$

This change takes place in steam cylinders when fatty oils are used as lubricants, with the result that the fatty acids set free corrode the metal and form metallic soaps which choke the steam passages.

By the action of unorganised ferments (*enzymes*), naturally present in seeds, a similar decomposition may be caused. When, however, the decomposition is effected by means of an alkali, such as potash or soda, the alcohol alone is set free, and the fatty acid combines with the alkali or base, forming a *soap*; hence this type of action is termed "*saponification*." Thus, when olein is heated with a solution of potash the following change takes place, in the definite proportions stated :—

$$\begin{array}{ccccccc} C_3H_5(C_{17}H_{33}.CO.O)_3 & + & 3KOH & = & C_3H_5(OH)_3 & + & 3C_{17}H_{33}.CO.OK \\ \left.\begin{array}{c}\text{olein}\\ \text{884·84 pts.}\end{array}\right\} & + & \left\{\begin{array}{c}\text{potash}\\ \text{168·44 pts.}\end{array}\right\} & = & \left\{\begin{array}{c}\text{glycerol}\\ \text{92·06 pts.}\end{array}\right\} & + & \left\{\begin{array}{c}\text{potassium oleate}\\ \text{961·22 pts.}\end{array}\right. \end{array}$$

This reaction enables us to at once distinguish between a mineral oil and a fatty oil, and to separate the mineral oil from a mixture of the two. For, on boiling with potash, the hydrocarbons composing the mineral oil undergo no change, but the esters composing the fatty oil undergo saponification, forming soaps and glycerol, both of which can be washed away by water, leaving the mineral oil in the free state.

In the case of a wax like sperm oil or wool fat a complication arises, since the wax alcohols are not soluble in water, and, therefore, contaminate the mineral oil. The mixture can, however, be analysed by the method described on p. 321.

Soaps are easily decomposed by mineral acids, and the fatty acids are set free. Thus, in the case of potassium oleate and hydrochloric acid :—

$$\begin{array}{ccccccc} C_{17}H_{33}.CO.OK & + & HCl & = & KCl & + & C_{17}H_{33}.CO.OH. \\ \text{potassium oleate} & + & \text{hydrochloric acid} & = & \text{potassium chloride} & + & \text{oleic acid.} \end{array}$$

Most fatty acids, when melted, are oily liquids, which float as an insoluble oily layer on the surface of water; but a few, such as the valeric acid of porpoise jaw oil, are soluble in water, and evaporate with the steam when the water is boiled. The fatty acids obtained by saponifying the natural oils are almost invariably mixtures, and by examining the mixed fatty acids it is frequently possible to determine the nature of the fatty oil from which they have been derived.

The chief fatty acids which are known to occur in lubricating oils are given in Table XLI.

TABLE XLI.—FATTY ACIDS OCCURRING IN LUBRICATING OILS.

Series.	Name of Acid.	Formula.	Occurs chiefly in
Stearic $C_nH_{2n+1}.CO.OH$	Isovaleric	$C_4H_9.CO.OH$	Porpoise jaw oil (?).
	Caproic (?)	$C_5H_{11}.CO.OH$	Coconut oil.
	Caprylic	$C_7H_{15}.CO.OH$	
	Capric (?)	$C_9H_{19}.CO.OH$	
	Lauric	$C_{11}H_{23}.CO.OH$	
	Myristic	$C_{13}H_{27}.CO.OH$	
	Palmitic	$C_{15}H_{31}.CO.OH$	Palm oil; also tallow, olive oil, coconut oil, ben oil.
	Stearic	$C_{17}H_{35}.CO.OH$	Tallow; also palm, castor, rape, coconut, and ben oils.
	Arachidic	$C_{19}H_{39}.CO.OH$	Arachis oil; also rape and mustard oils.
	Behenic	$C_{21}H_{43}.CO.OH$	Ben oil.
	Lignoceric	$C_{23}H_{47}.CO.OH$	Arachis oil; also rape and mustard oils.
Oleic $C_nH_{2n-1}.CO.OH$	Hypogœic	$C_{15}H_{29}.CO.OH$	Arachis oil.
	Oleic	$C_{17}H_{33}.CO.OH$	Olive oil and the animal oleins.
	Rapic	$C_{17}H_{33}.CO.OH$	Rape oil.
	Erucic	$C_{21}H_{41}.CO.OH$	Rape and mustard oils.
Ricinoleic $C_nH_{2n-2}(OH).CO.OH$	Ricinoleic	$C_{17}H_{32}(OH).CO.OH$	Castor oil.
	Di-hydroxy-stearic	$C_{17}H_{33}(OH)_2.CO.OH$	Castor oil.
Linolic $C_nH_{2n-3}.CO.OH$	Linolic	$C_{17}H_{31}.CO.OH$	The drying oils; also olive oil, palm oil, and possibly rape oil.
Linolenic $C_nH_{2n-5}.CO.OH$	Linolenic	$C_{17}H_{29}.CO.OH$	The drying oils; also possibly rape oil, tallow, lard oil.
	Clupanodonic	$C_{21}H_{33}.CO.OH$	Japanese sardine oil; but also whale oil, and most other marine animal oils.[1]

The *vegetable oils* chiefly used for lubrication are rape, olive, and castor. Rape and olive oils are employed both alone and mixed with mineral oils. Castor oil is used in very large and increasing quantities for the lubrication of aircraft engines; it is also largely used for railway work in India, mixed with heavy mineral oil, of which it can take up a certain proportion only, the amount

---

[1] Tsujimoto, *Kôgyô-Kwagaku Zasshi* (*Jour. Chem. Ind., Japan*), **26** (1923), 1013–1032.

varying with the temperature. To produce with castor oil and mineral oil a mixture that will not, even at low temperatures, separate on standing, an equal volume of tallow oil or lard oil must first be mixed with the castor oil. Coconut oil is said to be used in India on light-running machinery, and in this country neutral coconut oleine is used for the preparation of mixed spindle and loom oils, but the commercial coconut oil seems quite unsuitable for such purposes, owing to the large amount of free fatty acid which it frequently contains (see p. 153). Maize oil (corn oil) has been described as a non-drying oil and a good lubricant, but it dries as readily as cottonseed oil.[1] Palm oil is sometimes used in making the yellow grease employed for the lubrication of railway wagon axles. Hazel-nut oil and ben oil are used for the lubrication of watches and delicate mechanism.

The *animal fats and oils* chiefly employed for lubrication are tallow, tallow oil, lard oil, neatsfoot oil, sperm oil, and porpoise jaw oil. Tallow is used for grease making, and the three next mentioned oils are chiefly employed for mixing with mineral oils. Sperm oil is used, both mixed and unmixed with mineral oil, for light machinery and spindles. Porpoise jaw oil is used for the lubrication of watches and delicate mechanism, for which a thoroughly non-drying and fairly limpid oil is required.

Rape (Colza) Oil.—Commercial rape or colza oil is obtained from the seeds of several cultivated varieties of *Brassica Campestris*, Linn., the navew or wild turnip, a plant belonging to the natural order *Cruciferæ*, cultivated very extensively in Europe; also in India and China. The principal source of European rape oil (German, *Rapsöl*) is rape seed or cole seed, from *B. Campestris* var. *Napus*. *B. Campestris oleifera* proper, cultivated in France and Belgium under the name "colza," yields colza oil (German, *Kohlsaatöl*), and *B. Campestris* var. *Rapa* (*B. Rapa oleifera*, Linn.), grown in South Germany, yields the oil known as "rubsen" (German, *Rüböl* or *Rübsenöl*). These three oils, colza, rape, and rubsen, though botanically quite distinct, are similar in their chief physical and chemical characters, and are not distinguished commercially, being all sold as rape oil.

The rape seed which is so largely imported into Europe from India for the manufacture of rape oil is the product of chiefly *B. Campestris* var. *Glauca*. Indian rape seed varies very much in size and appearance, according to the district in which it has been grown, the finest commercial varieties being known as yellow Guzerat and yellow Cawnpore, less esteemed kinds as Madras, brown Calcutta, brown Cawnpore, Ferozepore, etc. A seed known as Jamba rape,[2] which is said to yield a good oil, is occasionally exported from Kurrachi. Indian rape has some of the characters of mustard (possibly owing to the common practice of sowing the seeds together), in consequence of which the cake cannot be safely used for feeding cattle.[3] The resemblance between some kinds of Indian rape seed and white mustard seed has led to frequent mistakes and even lawsuits. Thus the seed known as "Guzerat" resembles a mixture of ordinary rape with white mustard. The careful examination of Dr. Wittmack, of the Berlin Agricultural Museum, however, has shown conclusively that the structural characters of the seeds are those of rape and not of white mustard, and there is reason to suppose that the white, as well as the dark seeds are all the produce of the same plant.[4] Watts [5] mentions two other varieties of Indian rape, viz. *B. Campestris* var.

---

[1] *Jour. Soc. Chem. Ind.*, xviii. (1899), p. 346.

[2] For its characters, see Lewkowitsch, *Analysis of Oils*, sixth edition, 1922, ii. 282.

[3] *Kew Bulletin*, 1894, p. 96.

[4] *Kew Bulletin*, 1877, p. 34; and 1894, p. 96.

[5] *Dict. of the Economic Products of India*, i. 522–528.

Dichotoma and *B. Campestris* var. *Toria*; the oil from the former he terms Indian colza, and says it is chiefly used for anointing the body, that from the latter is probably mixed with the oil from the var. *Glauca.* The following results may be of interest as showing the characters of Indian rape oil extracted from the seed by ether in the laboratory:—

TABLE XLII.

Physical and Chemical Characters.	Yellow Guzerat.	Brown Calcutta.	Madras.
Sp. gr. at 60° F., . . .	0·9133	0·9146	0·9140
Saponification value, per cent.,	17·50	17·42	17·45
Iodine value, per cent., . .	97·8	102·7	99·6
Oxidation test (see p. 353), .	1 grm. of the oil did not dry or become unduly thickened in 16 hours at 212° F.		

A more complete investigation of the constants of Indian crude rape oils expressed from different varieties of pure seeds has been published by Crossley and Le Sueur.[1] See Table XLIII.

TABLE XLIII.—INDIAN RAPE OILS. CROSSLEY AND LE SUEUR.

Botanical Name.	Variety.	Locality.	Sp. Gr. at 15·5°.	Saponification Value.	Iodine Value.	Reichert-Meissl Value.	Hehner Value.	Efflux Time (seconds) of 50 c.c. at 70° F. Redwood.	Butyro Refractometer Degrees at 40°.	Optical Activity in 200 mm. tube.	Free (Oleic) Acid, %.
Brassica campestris	red	N.W. Provinces	0·9148	171·6	99·20	0·79	96·30	390·6	...	− 7′	0·73
Brassica campestris	glauca	N.W. Provinces	0·9142	171·4	97·71	0·67	95·04	402·6	59·2	−10′	0·45
Brassica campestris	dichotoma	N.W. Provinces	0·9154	172·2	104·84	0·22	95·57	371·8	...	...	0·39
Brassica campestris	...	Punjab	0·9163	173·4	96·25	0·43	94·56	393·2	...	...	0·65
Brassica campestris	brown	Bombay	0·9171	172·8	94·10	0·00	...	464·6	..	...	1·00
Brassica campestris	yellow	Bombay	0·9141	160·4	96·66	0·00	...	413·8	...	− 5′	0·36
Brassica campestris	napus	Bengal	0·9146	167·7	97·70	0·00	95·55	398·0	58·8	−15′	0·95

Rape seed, from *B. Campestris* var. *Chinensis* (Chinese Cabbage), is produced extensively in China, and from another variety, *B. Campestris* var. *Cernua*, in Japan. The oil is exported from both countries to Europe. The following results were obtained by examination of Chinese rape seed oil before and after refining on a large scale:—

	Crude.	*Refined.*
Sp. gr. at 60° F., ...	0·9146	0·9147
Saponification value, per cent., .	17·21	17·19
Iodine value, ...	101·1	101·0
Maumené thermal value, ° C., .	58·7°	57·8°
Unsaponifiable matter, per cent., .	1·65	1·20
Free (oleic) acid, per cent., . .	0·4	1·4

The oil of the hedge radish or wild radish, *Raphanus Raphanistrum*, sometimes called hedge mustard, is said to be mixed with and even substituted for rape oil in Hungary.

Rape oil is obtained from the seed either by expression or by extraction

---

[1] *Jour. Soc. Chem. Ind.*, xvii. (1898), p. 989.

with solvents. In either case the seed is first thoroughly crushed in roller mills. In the process of expression the crushed seed is first subjected to very moderate pressure in the cold, by which a considerable quantity of oil is obtained; the cakes are again passed through the mill, and the meal is then heated and damped in a jacketed steam-pan called a "kettle," which process, by rendering the remaining oil more fluid, facilitates its expression, and at the same time coagulates some of the albuminous matter of the seed and prevents it from being expressed with the oil. The heated seed-meal is then rapidly moulded into cakes and subjected to hydraulic pressure. In the process of extraction with a solvent, by which means the larger proportion of the rape oil of commerce is now obtained, the crushed dry seed is placed in the extraction apparatus and extracted with petroleum spirit or carbon disulphide, and the oil is obtained by distilling off the solvent.

Crude rape oil is dark in colour, and contains albuminous and other impurities which cause turbidity and set up fermentation, resulting in the partial decomposition of the glycerides with liberation of free fatty acids. In order to remove these impurities, it is usual to refine the oil by agitating it, whilst warm, with a strictly limited proportion (0·5 to 1·5 per cent.) of sulphuric acid (Thénard's process) sufficient to attack and char the impurities, which are more easily acted upon than the glycerides. After thoroughly agitating the oil with the acid for about ¾ to 1 hour, sometimes longer, according to the quantity and quality of the oil treated, the mixture is allowed to rest, and the suspended acid and impurities gradually settle out as a dark-coloured magma ("foots"), leaving the oil bright and clear. The latter is then drawn off, washed by agitation with steam and hot water, again racked off and boiled with water a second time, allowed to settle, and "baled" until bright.

TABLE XLIV.—RAPE OIL BEFORE AND AFTER REFINING BY THÉNARD'S METHOD.

Physical and Chemical Characters.	Brown Rape Oil from freshly crushed seed.	Brown Rape Oil clarified by settling.	Refined Rape Oil.
Free (oleic) acid, per cent., .	1·58	0·98	2·26
Specific gravity at 60° F., .	0·9146	0·9147	0·9141
Relative efflux time at 60° F.,	104	101	100
Saponification value, per cent.,	17·42	17·36	17·30
Iodine value, per cent., . .	101·8	100·9	102·3
Maumené thermal value, ° C.,	57·0	56·25	56·75
Unsaponifiable matter, per cent.,	0·98	0·95	0·75

The results contained in Table XLIV. are of interest as showing the effect of the acid refining process upon the acidity and some other analytical characters of rape oil. For the samples the authors were indebted some years ago to Mr. John F. Hutcheson of Glasgow, who kindly obtained them specially from Stettin.

Rape oil refined by Thénard's process is apt to contain traces of free sulphuric acid (see p. 389). The best method of refining rape oil for lubricating is by means of fuller's earth, after a preliminary treatment by Thénard's process, in which much less sulphuric acid is used than that mentioned above, and the excess is neutralised by adding lime as soon as the acid has caused the impurities to coagulate.

Rape oil has been found to contain esters (glycerides) of unsaturated fatty acids (rapic and erucic). Rapic acid, $C_{17}H_{33}.CO.OH$, is isomeric with oleic acid, and absorbs two atoms of iodine (90·07 per cent.). Erucic acid, $C_{21}H_{41}.CO.OH$, also absorbs two atoms of iodine (75·15 per cent.). As rape oil absorbs about 100 per cent. of iodine it must contain acids of the linolic or linolenic series, and this is confirmed by the tendency of this oil to oxidise more readily than olive oil. Ether-insoluble bromides (2·4–3·6 per cent.) have been obtained by several chemists from the fatty acids of rape oil. Esters of saturated acids occur in rape oil in small proportion (1–1½ per cent.) and include arachidic and lignoceric acids.

Ponzio[1] found 0·4 per cent. of arachidic acid in one sample. Alén[2] found arachidic acid in the oil from Guzerat seed, but not in that from the European varieties. Archbutt[3] found 1·43 per cent. of arachidic (and lignoceric) acids in rape oil extracted by means of ether from Guzerat seed, and 1·14 per cent. in commercial (Stettin) rape oil expressed from rape and rubsen seed. Of 51 samples of commercial rape oil which were specially examined by Renard's process, about two-thirds were found to contain arachidic acid. Indian rape oil from *B. glauca* seems to contain more of this acid than the European oil, and the extracted oil more than the expressed oil; of the latter, the cold-pressed oil probably contains less than the hot-pressed. Arachidic and lignoceric acids are also contained in mustard oil.

Rape oil is by no means a non-drying oil; and as different samples vary considerably in oxidising property, it is necessary to make a careful selection of the oil intended for lubricating. Rape oil is not suitable for delicate machinery.

According to Schaedler, rape oil solidifies at −2° to −10° C.; but Holde states that all rape oils sooner or later solidify at 0° C. (32° F.). The following experiment was made by one of the authors. Some genuine refined rape oil was placed in a glass tube, immersed in melting ice for three hours without stirring, and then for three hours longer, stirring at intervals. It remained clear and fluid. Some of the same oil, previously frozen, having been added, the oil was kept in ice for three hours longer, with occasional stirring, but the frozen oil slowly melted. The temperature was then gradually reduced to 14° to 16° F. (−10° to −9° C.), and the oil became very turbid, but after remaining for two hours at this temperature, with stirring, it did not lose its fluidity. After still further reducing the temperature to 11° F. (−11·6° C.), and stirring, the oil solidified in about half an hour.

For the constants of genuine rape oil, and the detection of adulteration, see p. 388.

Black Sea Rape Oil. Ravison Oil.—Oil expressed from the wild rape seed of the Black Sea district, known as ravison oil, is inferior in quality to genuine rape oil from cultivated seed; it has a higher sp. gr., higher saponification and iodine values, lower viscosity, and more strongly marked drying properties than ordinary rape oil, and is usually of inferior quality for lubricating. The unacknowledged admixture of this oil with rape oil must therefore be regarded as adulteration. To prevent dispute, ravison oil should be definitely excluded in contracts for rape oil. The chief properties of the oil are shown by the results in Table XLV. (p. 147). The samples of Black Sea oil and seed were kindly supplied by Messrs. Seaton & Co., of Hull.

Olive Oil.—Olive oil is obtained from the fruit of the cultivated olive tree, *Olea Europæa Sativa,* the numerous varieties of which are grown chiefly in the countries bordering the Mediterranean, also in California and other countries where the climate is suitable. The fruit is very rich in oil, which

---

[1] *J. für. pr. Chem.*, xlviii. (1893), p. 487.

[2] *Svensk. Kemisk Tidskrift*, 1893, p. 179.

[3] *Jour. Soc. Chem. Ind.*, xvii. (1898), p. 1009.

is contained chiefly in the fleshy mesocarp, but also in the kernel and shell (endocarp).

The finest olive oil is obtained by hand picking the olives before they become too ripe, gently pressing them by hand in cloths, and collecting the oil which exudes. The limited quantity of "*virgin oil*" thus obtained appears to be used as salad oil, and some of it as a lubricant by watchmakers; it is purified by agitation with water, allowing the mucilaginous matter to subside, and skimming off the clear oil from the surface. Oil nearly as fine is obtained on the large scale by crushing the ripe olives under millstones or between iron rolls, usually, though not always, without breaking up the kernels, and pressing the pulp, without heating it, in bags or mats of esparto grass under very moderate pressure. After purifying by agitation with water and settling, this cold-pressed oil is called "*superfine oil*," or frequently "*virgin oil*," and is used chiefly as a salad oil. The once-pressed marc is broken up by bending the mats back and forth by hand, moistened with hot water, and again pressed, more strongly than before, yielding "*ordinary oil*," or "oil of the second pressing," which is said to be but slightly inferior to the virgin oil. The twice-pressed marc, after being stored for a time and allowed to ferment (which facilitates the extraction of the oil), is reground so as to crush the olive stones, and after being stirred up with boiling water, is subjected to the heaviest pressure obtainable with the appliances used; oil of inferior quality, called "*pyrene oil*" or "*bagasses oil*," is thus obtained. The residual marc still

TABLE XLV.—PROPERTIES OF BLACK SEA RAPE OIL.

Physical and Chemical Data.	Kustendje Rape Oil made from Wild Rape Seed from the Black Sea. Extracted by the CS_2 process.	Black Sea Rape Oil Expressed and Refined. Two Samples.		Oil extracted in the Laboratory from Black Sea Rape Seed. Two Samples.		Oil extracted from Seed (*b*) after picking out 13·3 % of Foreign Seeds.
		(*a*)	(*b*)	(*a*)	(*b*)	
Free acid, as oleic acid, %	2·43	6·02	2·8	..	..	..
Sp. gr. at 60° F., . .	0·9183	0·9200	0·9217	0·9211	0·9200	0·9200
Viscosity at 60° F., .	About 6 % lower than that of refined Stettin rape oil.	About 13 % lower than that of refined Stettin oil.				
Saponification value, %	17·79	17·93	17·89	17·93	17·81	17·81
Iodine value, . . .	110·2	110·7	121·7	111·5	108·9	109·3
Maumené thermal value, °C., . .	65·8	76	..	..	..	..
Unsaponifiable matter, %	1·45	1·66	1·64	..	..	..
Arachidic acid obtained by Renard's process, .	0·79 % (m. p. 70·4° C.)	..	..	..	..	..
Colour Reactions.						
Millian test, . . .	neg.	neg.	neg.	..	..	..
Badouin's test, . .	..	..	neg.	.	..	..
Oxidation test (1 grm. of oil exposed on a watch glass at 212° F. for 16 hours),	Rather more dried than Stettin oil, but not more thickened.	Badly dried and much more thickened than Stettin oil.	..	Dried and much thickened		
Properties of Mixed Fatty Acids.						
Sp. gr. at $\frac{212^\circ}{212^\circ}$ F., . .	..	..	0·8802			
Iodine value, . . .	..	..	126·1			

contains some oil, which is extracted by means of carbon disulphide or petroleum spirit, and is known as "*sulphocarbon oil.*" The last two kinds of oil are dark green or brown in colour (due to the presence of chlorophyll), consist largely of decomposition products, are very acid, and are fit only for soapmaking or dyeing. Some of the dark-coloured oils, even when nearly neutral, are of inferior quality for lubricating, owing to their tendency to thicken and "gum" on the bearings. Oils known as "*huile tournante*" and "*huile d'enfer*" [1] are much decomposed and highly acid olive oils recovered from the watery residues of the oil pressing, and though in demand for dyeing Turkey red, are quite unfit for lubricating.

In the refining of the crude olive oil, it is sometimes allowed merely to rest in large tanks until the "mucilage" has deposited, undergoing during the time more or less decomposition, and often becoming spoiled for lubricating. Sometimes the oil is refined by washing with water alone, and sometimes it is washed with caustic soda. In France it is usual to filter the oil through cotton or paper.[2]

Olive-kernel oil was formerly believed to be quite different in properties from ordinary olive oil (the oil of the mesocarp), having a sharp and bitter taste, a dark green or brown colour, and being readily soluble in alcohol, owing to the presence of much free fatty acid; but it has been shown by Klein [3] that the characteristics formerly assigned to olive-kernel oil are really those of *pyrene* oil or *bagasses* oil, the dark-coloured and more or less decomposed oil expressed from the stones and refuse of the first and second pressing of the olives. Pure olive-kernel oil, prepared both by cold and by warm expression from the kernels alone, without any admixture of the pulp, was found to have the following characters, as compared with a sample of "bagasses" oil:—

	Olive-kernel Oil.	"*Bagasses*" *Oil.*
Sp. gr. at 60° F., ...	0·9186 to 0·9191	0·928
Saponification value, per cent., .	18·23 „ 18·38	19·05
Iodine value, ...	87·0 „ 87·8	71·6
Free fatty acids, per cent., . .	1·00 „ 1·78	71·12

From these results it appears that pure olive-kernel oil is somewhat higher in specific gravity and iodine value, and lower in saponification value, than ordinary olive oil,[4] but it does not naturally contain an excess of free fatty acids. The characters of commercial olive oil must evidently depend to some extent upon whether the process of extraction has or has not been such as to include the kernel oil.

The scarcity of olive oil resulting from bad seasons has led, during recent years, to the working up for the lubricating-oil market of the above-mentioned residuum oils containing the kernel oil, by washing them with alkali and then with water to remove the greater part of the free acid. These washed oils are put upon the market under the name of "neutral" or "saponified" oils, and are sold under a guarantee of maximum acidity—1 per cent. to 4 per cent. as the case may be. They are usually characterised by turbidity, and are sometimes dark in colour. They generally contain traces of moisture, up to 3 per cent. or more of wax-like unsaponifiable matter said to be derived from

---

[1] "*Enfer*" is the name given to the stone or tile cistern in which the water is left for the oil to rise.

[2] Lewkowitsch, *Oils, Fats, and Waxes*, ii. (1922), pp. 346–361, gives a very complete sketch of the sources of olive oil and the processes employed for its production, with references to the literature.

[3] *Jour. Soc. Chem. Ind.*, xvii. (1898), p. 1055; *Analyst*, xxiii. (1898), p. 284.

[4] See Table CXXXIV. on p. 388.

the woody shell of the olive kernels, have a low saponification value, and give an immediate brown or greenish-brown emulsion when shaken with nitric acid of 1·375 sp. gr., which is quite different from the brown colour given by cotton seed oil. The residuum oils used in the manufacture of these neutral oils may be obtained from various sources, and from some kinds, especially those from some parts of Tunis, a solid fat separates at ordinary temperatures, to which the turbidity is partly due.[1] These oils have an abnormally high viscosity, and by warming them until the turbidity has disappeared, and cooling again, the viscosity will be found to have greatly increased, so that it is difficult to obtain consistent results in the viscometer. The above-mentioned peculiarities need not prevent the best of these neutralised oils being used for blending with mineral oils for the lubrication of axles and heavy machinery—they sometimes have the advantage of very low acidity—but the refiners should see that the last traces of moisture are removed, as free fatty acid is more likely to corrode bearings in presence of moisture than if the oil is perfectly dry. The characteristics of a few commercial samples of neutralised olive-residuum oils are given in Table XLVI.

TABLE XLVI.—CHARACTERISTICS OF COMMERCIAL NEUTRALISED OLIVE-RESIDUUM OILS.

Specific gravity at 60° F, ...	0·9167	0·9165	0·9175	0·9186	0·9169	0·9175	0·9169	0·9161	0·9179
*Efflux time of 50 c. c. from Redwood's viscometer at 60° F (seconds),	516	450	437	478	480	561	524	428	465
Saponification value, per cent, .	18·61	18·69	18·93	18·69	18·60	18·55	18·59	18·54	18·58
Iodine value, per cent., . . .	86·4	85·1	85·8	84·4	85·5	85·6	85·0	86·5	86·2
Free (oleic) acid, per cent, .	2·9	3·3	1·0	1·1	0·9	2·3	1·8	0·4	1·6
Unsaponifiable matter, per cent,	2·49	2·34	2·08	2·70	3·30	3·32	3·23	2·98	2·67
Arachidic acid, by Renard's process,	..	...	...	..	...	...	nil	...	...
Ash, ...	nil	...	...	...	...	...	...	...	...

* Normal olive oil, 430–446 seconds.

Olive oil is chiefly composed of the glyceryl esters of oleic and palmitic acids, with some linolic acid. The proportion of esters of solid fatty acids is very variable in the oils from different sources and exceptionally large in the Tunisian oils from Sfax and Sousse, which are "demargarinated" to free them from the excess of "stearine." Solid acids in eighteen samples of Italian oils ranged from 5 per cent. to nearly 18 per cent., and in thirty-eight samples of Californian oils from 2 to 13 per cent. Tunisian oils may contain up to 25 per cent. The proportion of linolic acid must also vary considerably. Judging by the iodine values of the liquid fatty acids, the ratio of linolic to oleic acid may range from a very low figure to as much as 30 per cent. of the mixed acids. It is highest in the oils from Tunis and lowest in those from Italy and California. Olive oil contains no stearic acid and only a very minute amount of arachidic acid. Klein states that in olive-kernel oil he could find none. Tunisian and Algerian olive oils, if genuine, contain no arachidic acid detectable by Renard's process.[2]

For the characteristics of genuine olive oil and the detection of adulteration, see p. 391.

Tea-Seed Oil,[3] a non-drying oil closely resembling olive oil, obtained from the seeds of the tea plant, *Camellia theifera*, has long been used in China as an edible oil, for burning in lamps and for soapmaking. A plant, *Camellia theifera*, allied to the tea plant, is also cultivated in China for the sake of the oil obtained from its seeds, which is said to be a good lubricant for delicate

---

[1] It may also be due to mucilage and soap not completely removed by settling or filtration.

[2] Archbutt, *Jour. Soc. Chem. Ind.*, xxvi. (1907), pp. 453, 1185.

[3] Allen's *Commercial Organic Analysis*, ii. (1924,) p. 159.

machinery. Other allied oils are obtained from varieties of the tea plant cultivated in Japan and Assam. Carefully refined tea-seed oil very nearly resembles olive oil in chemical and physical characters, and, during the War, when olive oil became very scarce and very high in price, it was said to be largely adulterated with tea-seed oil. Such an admixture would be very difficult to detect.

Arachis Oil, Earth-Nut Oil, Ground-Nut Oil.—This non-drying oil can be used as a lubricant and is sometimes offered as a substitute for olive oil. It is obtained from the seeds or nuts, known as earthnuts or "monkey nuts," of *Arachis hypogæa*, a leguminous creeping plant cultivated in many warm countries, the oil being largely expressed in Europe, at Marseilles.

Arachis oil is usually pale greenish-yellow in colour and of a peculiar nutty flavour and odour, but can be prepared nearly colourless and tasteless. It solidifies at about 27°–37° F. The sp. gr. at 60° F. usually ranges from 0·916 to 0·919, though a much wider range of values has been observed. Other values are given in the tables in Chapters VII. and VIII. This oil is readily distinguished from all other fatty oils by the fact that it contains from 4·3 to 5·4 per cent. of arachidic and lignoceric acids, which can be separated and estimated by the process described in detail on pp. 339 to 345.

As a non-drying oil, arachis oil of the best quality is inferior to olive oil; it is, however, in this respect much superior to rape oil.

Castor Oil.—Castor oil is obtained, both by expression and extraction, from the seeds of the castor oil plant, *Ricinus communis*, Linn., of which there are numerous varieties. The plant is most extensively cultivated in India, but also in Java,[1] the United States, France, Italy, Algeria, etc. It grows wild in Formosa [2] and South America.[3]

The crude oil is refined by boiling with water or steaming to dissolve soluble matters and coagulate-albumen, and is then clarified by settling or by filtering through fuller's earth.

Castor oil consists in the main of the glyceride of ricinoleic acid (including its isomers) $C_{17}H_{32}(OH).CO.OH$. According to Lewkowitsch (vol. ii., 6th ed., p. 408), less saturated fatty acids must also be present, otherwise the iodine value (81·4 to 90·6 per cent.) would not exceed about 76. Small quantities of tristearin and of the glyceride of dihydroxystearic acid, $C_{17}H_{33}(OH)_2.CO.OH$, are also present, but palmitin and olein are absent.

Castor oil, in very cold weather, is liable to deposit a solid fat, but it congeals only at very low temperatures. It does not readily dry on exposure to the air, nor does it easily turn rancid if properly refined and filtered so that the fat-hydrolysing enzyme contained in the seed is removed and the oil thoroughly dried (Lewkowitsch).

Owing to its peculiar composition, castor oil differs remarkably in solubility from most fatty oils. Thus, it is easily soluble in alcohol (other oils being but sparingly soluble), and it is almost insoluble in petroleum spirit and in mineral burning and lubricating oils (in which other fatty oils are easily soluble). The ready solubility of castor oil in alcohol has been made the basis of a valuable test for the presence of adulterants in this oil (see p. 395).

The limited extent to which castor oil and mineral oils are mutually soluble is of importance in the preparation of mixed lubricants containing the former. At 59° F. (15° C.) castor oil is practically insoluble in petroleum spirit and in burning oil. In "865" Scotch shale oil, at the same temperature, it dissolves to the extent of about 1–1½ per cent.; "890" shale oil dissolves about 2–2½

---

[1] *Jour. Soc. Chem. Ind.*, xiv. (1895), p. 321.

[2] *Ibid.*, xii. (1893), p. 769.

[3] Lewkowitsch, *Oils, Fats, and Waxes*, ii. (1922), p. 399.

per cent. of it; and "907/12" American mineral oil dissolves rather more. Therefore, at the ordinary temperature, castor oil is very sparingly soluble in mineral oils; the solubility is greater the more dense and viscous the mineral oil; it increases with rise of temperature and diminishes as the temperature falls.

On the other hand, castor oil is able to dissolve mineral spirit and mineral oils in proportions which decrease as the sp. gr. of the mineral oil increases. The following table shows the maximum volumes which were found to give a clear solution at 59° F. (15° C.) with 10 c.c. of pure castor oil.

TABLE XLVII.

Mineral Oil Employed.	Sp. Gr. at 60° F.	Maximum Volume miscible with 10 c.c. of pure Castor Oil at 59° F.
Mineral (petroleum) spirit, ...	0·692	9·2 c.c.
'White Rose' petroleum, . . .	0·788	5·5 c.c.
Scotch shale oil, ...	0·865	3·7 c.c.
" "	0·890	2·45 c.c.
American pale mineral oil, . . .	0·907-0·912	1·7 c.c.

Although pure castor oil almost refuses to mix with mineral lubricating oil, the difficulty entirely disappears if a third oil, such as rape, tallow, or lard oil, is present, a clear mixture of the three being readily obtained. Pure castor oil mixes with refined rosin oil in all proportions.

By heating castor oil in an autoclave to 260°–300° C. under a pressure of four to six atmospheres for about ten hours, it is changed into a product which is said to be miscible with mineral oil in any proportion.[1] Other processes for preparing mineral oil -soluble products from castor oil by the action of heat, treatment with formaldehyde, etc., are to be found in the patent literature.[2]

Palm Oil.—Palm oil or fat, which is used to a limited extent for making railway wagon grease, is obtained from the fleshy covering (mesocarp) of the fruit of the oil-palm, *Elæis guineensis*, which flourishes in West Africa. Another species of palm tree, *Elæis melanocca*, is cultivated in South America, the W. Indies, Java, and N. Burma, but, according to Lewkowitsch,[3] only small quantities are obtained from this tree, and they do not reach the European market. In Africa, the fruit is gathered by the natives and stored in holes in the ground until the pulp has become softened by decomposition; it is then pounded, and after the kernels have been separated the pulp is heated with water until the oil begins to exude; it is then squeezed in rough nets, and the oil which runs out, mixed with more or less fibre, dirt, and water, is collected, and forms the palm oil of commerce. It is not surprising that the fat prepared in this crude fashion is much decomposed, and consists always largely, often chiefly, of free fatty acid. It is on that account a most unsuitable material for making lubricating grease. According to de Schepper and Geitel,[4] the most neutral brands are the following: Lagos, Loando, Old Calabar, Gold Coast, Sherboro, and Gaboon. The percentage of neutral fat ranges from 58–68 per cent. in the first-named to 79–93 per cent. in the last-named brand. Analyses of sixteen samples of commercial palm oil made by F. C. Tipler, formerly chemist

---

[1] *Eng. Pats.*, 24935 and 24936, 1905.

[2] See *e.g.*, *Eng. Patents*, 15466, 1908; 15497 and 15748, 1909; 128007, 1918.

[3] *Oils, Fats, and Waxes*, ii. (1922), p. 544.

[4] *Dingl. Polyt. Jour.*, 245, 295.

TABLE XLVIII.—ANALYSES OF PALM OIL (*Tipler*).

Description.	Lagos.	Emoe.	Qua Eboe.	Bonny.	Old Calabar.	Benin	Forcados.	Victoria.	Cameroon.	New Calabar.	Accra.	Half Jack.	Red Sierra Leone.	Congo	Salt Pond.	Bassa.
Colour	Orange yellow	Orange yellow	Orange yellow	Orange yellow	Orange yellow	Yellow	Yellow	Orange yellow	Brownish yellow	Greenish yellow	Light brownish yellow	Deep orange yellow	Deep orange yellow	Dirty yellowish brown	Light brownish yellow	Dirty greenish yellow
Odour, ...	Satisfactory	Satisfactory	Satisfactory	Satisfactory	Satisfactory	Satisfactory	Satisfactory	Satisfactory	Satisfactory	Rancid	Very rancid	Satisfactory	Satisfactory	Very rancid and objectionable	Rancid and sickly	Fairly satisfactory
Water (loss at 105°–110° C.), %	0·55	0·77	0·17	0·59	0·75	1·61	1·43	1·00	0·81	1·20	1·45	2·49	1·31	2·18	1·78	3·98
Matter insoluble in ether, %	0·015	0·079	0·008	0·116	0·180	0·319	0·084	0·016	0·069	0·239	0·114	0·175	0·081	0·246	0·041	1·040
Containing ash, . . %	0·004	0·056	0·002	0·062	0·037	0·267	0·057	0·005	0·004	0·133	0·075	0·104	0·018	0·237	0·023	0·433
Specific gravity at 100°/100° C.,	0·8718	0·8774	0·8713	0·8717	0·8702	0·8720	0·8720	0·8725	0·8713	0·8724	0·8735	0·8713	0·8711	0·8794	0·8897	0·8747
M.p., ° C. (Bensemann's method), Incipient fusion,	25°	32°	28°	34°	28°	34°	40°	32°	30°	42°	35°	23°	30°	45°	46·5°	43°
Complete fusion,	42–45°	49°	48°	51°	48°	49°	50°	52°	50°	51°	51°	48°	50°	55–60°	55–60°	55–60°
														Insoluble matter interferes.		
Free (palmitic) acid, . %	11·26	24·58	9·22	10·24	24·58	37·89	36·86	18·94	17·92	48·13	36·86	21·50	21·50	76·29	83·46	70·14
Saponification value, . %	19·0	19·5	19·3	19·3	19·8	19·6	19·9	19·5	19·4	19·6	19·6	19·5	18·9	20·1	20·4	19·6
Iodine value (Wijs) . .	57·5	53·0	56·5	53·7	53·0	52·0	52·5	53·5	53·7	50·2	54·7	56·7	55·7	33·0	20·4	48·7
Mixed Fatty Acids.																
Iodine value, . . .	58·3	50·2	58·3	55·0	55·0	53·2	50·2	50·3	53·7	53·5	49·2	56·5	54·7	33·3	23·7	49·9
Titer test, ° C., . . .	44·0°	42·3°	43·9°	44·3°	44·6°	44·6°	44·7°	44·8°	44·6°	44·9°	44·1°	40·4°	43·0°	47·0°	47·6°	40·9°

of the London and North-Western Railway Co., and kindly communicated by him, are given in Table XLVIII. (p. 152). According to Fryer and Weston, more modern methods are now being developed for the production of palm oil in W. Africa.[1]

Palm oil is, at ordinary temperatures, a soft fat melting at 80°–97° F., when fairly rich in neutral fat; the presence of much free fatty acid may, however, raise the melting-point to 108°–109° F. The chief constituents are free palmitic acid, palmitin and olein, with small quantities of linolein, stearin, and another fat. The colour varies from yellow to deep red. The odour of the fresh fat is pleasant and quite characteristic.

Palm-Kernel Oil.—Palm-kernels contain an oil or soft fat which is quite different from palm oil. In chemical composition and characters it closely resembles coconut oil, having an exceptionally high saponification value (24·8–25·0 per cent.) and a very low iodine value (10–17·5 per cent.). The commercial oil contains free fatty acid, sometimes in very large proportion. It does not appear to be used as a lubricant.

Coconut Oil.—Coconut oil is obtained from the white pulp of the common coconut, the seed of the coconut palm, *Cocos nucifera,* which flourishes abundantly in the tropical Pacific islands, the West Indies, tropical America, etc. The oil is obtained either by expression from the more or less decomposed pulp (native method) or by expression and extraction with a solvent from the dried pulp ("copra") which is imported into Europe for the purpose. The chief use of the oil is for the preparation of edible fats and for candle- and soap-making, but, according to Hurst, it is used as a lubricant for light-running machinery in India, and in this country *coconut oleine* is employed in admixture with mineral oil as a lubricant for spindles, looms, and other machinery. A brief description of the oil is therefore necessary.

Commercial *Coconut* "*Oleine*" is a fluid oil at 20° C., obtained by hydraulic pressure from coconut oil. Samples examined respectively by Allen and Archbutt gave the following results:—

	Allen.	*Archbutt.*
Sp. gr. at 15·5° C., ...	0·9262	0·9290
" " $\frac{98·5^\circ}{15·5^\circ}$ C., ...	0·8710	. .
" " $\frac{100^\circ}{100^\circ}$ C., ...	. .	0·8958
Solidifying-point (titer test), ° C., . .	4°, rising to 8°,	11°, rising to 13°
Melting-point, ° C., ...	. .	18°
Viscosity (poises) at 15·5° C. (60° F.), .	. .	0·68 (rape oil, 1·15)
" " 100° C. (212° F.),	. .	0·052 (rape oil, 0·086)
Saponification value, per cent., . .	26·1	25·77
Iodine value, ...	. .	13·4
Reichert value, ...	5·6	. .
Free (Oleic) acid, per cent., . . .	. .	0·2
Unsaponifiable matter, per cent., . .	. .	2·56

Commercial coconut oil is at ordinary temperatures in this country a soft white fat, melting to a limpid oil at 68°–82° F. It easily turns rancid, and usually contains a more or less considerable quantity of free fatty acids, ranging from 5 per cent. to as much as 25 per cent., according to Lewkowitsch. When carefully prepared, however, from fresh copra, it is as neutral and keeps as well as other oils and fats, and if stored in full vessels protected from light and air, it does not become rancid sooner than other fats stored under similar

---

[1] *Tech. Handbook of Oils, Fats, and Waxes,* i. (1918), p. 155.

conditions.[1] Coconut oil has a complex and unusual composition, consisting mainly of the glycerides of lauric and myristic acids, with some palmitic, stearic, and oleic, and a notable proportion of volatile acids, caproic, caprylic, and capric; consequently, it differs remarkably from all oils and fats except palm-nut oil, which it very closely resembles. Elsdon[2] found the composition of the mixed fatty acids to be caproic 2 per cent., caprylic 9 per cent., capric 10 per cent., lauric 45 per cent., myristic 20 per cent., palmitic 7 per cent., stearic 5 per cent., oleic 2 per cent. On the other hand, Bömer and Baumann[3] failed to find either capric or caproic acids, but they confirm Elsdon's analysis in other respects.

Ben Oil.—Ben or behen oil is expressed from the seeds or nuts of *Moringa pterygosperma* and *M. aptera*, trees which are natives of Egypt, Arabia, Syria, and the East Indies, and which have been cultivated for many years in tropical America. The first-pressed oil is white or pale yellow in colour, odourless, and has a sweetish flavour. By stronger pressing, a darker coloured oil is obtained, having a bitter and somewhat sharp taste. Ben oil has been said not to become rancid by long exposure to the air, but Lewkowitsch finds this statement to be erroneous, and says that ben oil becomes rancid like other similar oils unless preserved under proper conditions. It is fluid at 20° C., somewhat viscid at 15° C., begins to deposit a solid fat at 7° C., and solidifies at 0° C. It contains the glycerides of stearic, palmitic, behenic, and oleic acids. That portion of the oil which remains fluid at 7° C. is used for the lubrication of delicate mechanism, including watches.

Hazel-Nut Oil.[4]—This oil is obtained from the seeds or nuts of *Corylus Avellana*, the common hazel. The nuts are known as filberts, cobs, Barcelona nuts, etc. They contain 50 to 60 per cent. of a golden-yellow coloured oil, which is used to some extent as a lubricant for delicate mechanism. The oil has a characteristic odour, and, according to Hanus,[5] it is composed of the glycerides of mainly oleic acid, with some palmitic and a very little stearic acid. According to Lewkowitsch some linolic acid is probably also present.

Tallow.—Tallow is the fat of certain ruminant animals, separated from the enveloping membrane of the tissue by the process of melting or "rendering." Beef tallow is obtained from oxen, mutton tallow from rams, ewes, bucks, and she-goats.

The rendering of the fat on a small scale is effected by heating the tissue, either alone or with the addition of water, in an open pan over a fire, continually stirring to prevent burning, until the membrane has shrunk together and can be strained off; preferably, the pan is heated by means of a steam-jacket, which admits of more perfect control of the temperature. On a larger scale, a more complete separation of the fat from the tissue is effected by heating the latter in strong, closed digesters, into which live steam under a pressure of 50–70 lbs. per square inch is admitted, and the liberated oil which rises to the surface of the condensed water is drawn off through a cock. Another method consists in boiling the fatty tissue in open vessels with water containing sulphuric acid or caustic soda, by either of which the nitrogenous membrane of the cell walls is chemically broken down and the fat liberated. The use of sulphuric acid would be objectionable in rendering tallow intended for lubricating, because it causes partial hydrolysis of the glycerides and increases the proportion of free fatty acids; but the employment of caustic soda, which neutralises and

---

[1] Walker, *Philippine Jour. of Science*, 1906, i. p. 117.

[2] *Analyst*, xxxviii. (1912), p. 8.

[3] *Zeits. Nahr. Genussm.*, xl. pp. 97–151.

[4] See Schaedler, *Technologie der Fette und Oele* (1892), p. 520.

[5] *Zeits. f. Untersuch. Nahr. n. Genussmittel*, 1899, ii. (8), p. 617.

dissolves the fatty acids, would be advantageous. In rendering tallow for lubrication, the main points to be attended to are to use only fresh fat, which has not had time to undergo decomposition, and to remove, by settling and straining, all water and fragments of membrane which, by subsequent decomposition, might cause the resulting tallow to develop acidity.

Neutral tallow was, until recently, believed to consist almost exclusively of the simple glycerides stearin, palmitin, and olein, and to be softer in proportion to the amount of olein contained in it. The presence of several mixed glycerides has, however, now been proved, and traces of linolic and linolenic acids are said to have been detected. The relative proportions of stearin, palmitin, and olein in tallow vary according to the nature of the animal, its sex, breed, age, food, and the part of the body from which the fat is taken. The fat from the male is usually harder than that from the female, and mutton tallow is, as a rule, harder than beef tallow; but, taking the average, the proportion of olein in tallow is about 47 per cent., and the remainder consists chiefly of stearin and palmitin.

Of the various descriptions of tallow (Russian, North American beef, South American beef, Australian beef, Australian mutton, home refined, etc.), South American beef is usually the least acid (see p. 286), and, therefore, the best adapted for lubrication and for general application to metal; but there is no reason why preference should be given to any particular brand, if the results of chemical and physical tests prove the tallow to be genuine and of good quality.

Tallow Oil.—Tallow at the ordinary temperature of, say, 60°–80° F. is a mechanical mixture of solid and fluid fats, in which the former predominate to a sufficient extent to give the appearance of solidity to the whole. If subjected to pressure, the fluid portion can be squeezed out, and is known as "*tallow oil,*" or "*tallow oleine*"; the solid press-cake forms "*tallow stearine,*" and is used in candle manufacture. The separation is facilitated by allowing the melted tallow to cool very slowly, without disturbance, in large tubs at a temperature of 70°–80° F.; the crystallisation of the solid portion then takes place in small granular particles resembling seeds, whence the process is known technically as "seeding." Some of the fluid portion drains through coarse flannel cloth placed upon perforated diaphragms near the bottoms of the tubs, the remainder is obtained by subjecting the semi-solid residue to pressure in canvas bags, as in the manufacture of lard oil (*q.v.*).

Tallow oil differs, therefore, from tallow chiefly in the proportion of olein which it contains, and this proportion, and therefore the setting-point and some other characters, such as the iodine value, must vary according to the temperature at which the oil has been expressed.

Tallow oil, as a lubricant, is used chiefly for mixing with mineral oils.

Lard Oil.—Lard oil, expressed from rendered pig's fat or lard, is prepared in a similar manner to tallow oil. The more or less chilled lard is placed in close-textured woollen bags between wickerwork, and is subjected to moderate but long-continued hydraulic pressure (about 10 cwts. per square inch for eighteen hours). As in the case of tallow oil, the solidifying point and other characters of the oil depend upon the temperature at which it has been expressed, winter-pressed lard oil containing less of the solid constituents of the lard than that expressed in warmer weather. Lard is composed of the glycerides of lauric acid ($C_{11}H_{23}.CO.OH$), myristic acid ($C_{13}H_{27}.CO.OH$), palmitic acid ($C_{15}H_{31}.CO.OH$), stearic acid ($C_{17}H_{35}.CO.OH$), and oleic acid, with small quantities of linolic and possibly linolenic acid, and lard oil contains the same constituents in different proportions.

Prime lard oil is a nearly colourless, pale yellow or greenish-coloured oil, highly esteemed as a lubricant. The average viscosity is about the same as that of olive oil (see p. 400). Lard oil may begin to deposit stearine at 58°–60° F. and become semi-solid at 40°–42° F., or it may remain clear and fluid when chilled below 32° F.; it all depends upon the temperature at which the lard has been pressed. "Winter lard oil" has a lower freezing-point than "summer lard oil."

Neatsfoot Oil.—Neatsfoot oil is obtained by boiling the feet and hocks of oxen in water and skimming off the oil which rises to the surface. The commercial oil often includes that from the feet of sheep and horses. Ten neats' feet yield from 2 to 2½ pints of a pale yellow, nearly odourless oil, which, on standing in a cold place, deposits a solid fat. The portion which remains fluid at a low temperature is used as a lubricant for clocks and other delicate machinery. Neatsfoot oil was formerly much esteemed and largely employed as a lubricant for engines and heavy machinery; it is now used, like lard and tallow oils, chiefly for mixing with mineral lubricating oils. The extensive demand for neatsfoot oil in the leather trade has probably diminished its employment as a lubricant. Neatsfoot oil is composed of chiefly olein, with some palmitin and stearin. Linolin appears to be absent.

Whale Oil.—Whale oil proper is obtained from the blubber of the Greenland or Arctic "right" whale, *Balæna mysticetus*; but commercial whale oil includes the oil from the Southern right whale, *Balæna Australis*, and various other species of *Balæna* and *Balænoptera* (fin-backed whales) belonging to the tribe of *Balænoidea* or whalebone-yielding whales.

The oil, which naturally exudes from the blubber of these animals, and which is also obtained by heating it with water, is mainly glyceridic in character, and may be distinguished at once from the sperm oils by its higher specific gravity (above 0·917 at 60° F.), and by yielding less than 4 per cent. of unsaponifiable matter. The glycerides present include esters of palmitic acid and of the highly unsaturated clupanodonic acid ($C_{21}H_{33}.CO.OH$),[1] but further research is necessary. Whale oil even of the best quality has marked drying properties, and is not fit for use as a lubricant; it is said to be used to some extent for mixing with mineral lubricating oil.

Sperm Oil. Arctic Sperm (Bottlenose) Oil.—These oils, obtained from two different kinds (genera) of whale belonging to the family *Physeteridæ* (toothed whales possessing no functional teeth in the upper jaw) are so similar in composition and general characters that they may conveniently be described together. True sperm or "Southern sperm" oil is obtained from the head-cavities and blubber of the Cachelot or great Sperm whale, *Physeter macrocephalus* (sub-family, *Physeterinæ*), formerly found in all seas up to 70° northern and southern latitudes, but now more scarce, and confined chiefly to the Pacific and Indian Oceans. Arctic sperm or bottlenose oil is obtained from the much smaller Bottlenose whale, *Hyperöodon rostratus* (sub-family, *Rhynchoceti*), which is caught principally in the Arctic seas between Iceland and Spitzbergen. Both crude oils contain spermaceti—sperm oil much more than bottlenose—which crystallises out on cooling; it is separated by straining the oil through bags, and is used for the manufacture of sperm candles. Sperm oil is, therefore, liable to deposit spermaceti unless it has been bagged at a very low temperature. Allen states that practically the whole of the spermaceti is deposited by cooling the oil to 4° C. (39·2° F.).

Neither sperm nor bottlenose oils contain more than small quantities of glycerides;[2] they consist mainly of the esters of monovalent alcohols, and are,

---

[1] Tsujimoto, *Journal of the College of Engineering, Imp. Univ., Tokio*, 1906; also *Kôgyô-Kwagaku Zasshi* (*Jour. Chem. Ind., Japan*), **26** (1923), pp. 1013–1032.

[2] Fendler (*Chem. Zeit.*, 1905, **29**, 555) obtained 1·32 per cent. of glycerol from a sample of sperm oil. Dunlop (*J.S.C.I.*, 1908, **27**, 64) obtained 1·36 per cent. of glycerol from a sample

therefore, chemically classed as fluid waxes. According to Lewkowitsch,[1] the nature both of the alcohols and of the fatty acids is at present unknown. The former probably belong mainly to the ethylene series and the latter to the oleic series.

Sperm oil is pale yellow in colour, and when of good quality has only a faint odour. Unrefined Arctic sperm oil is usually darker in colour than Southern sperm oil and has a more or less unpleasant odour and flavour, but the deodorised Arctic sperm oil of commerce closely resembles Southern sperm oil. Lewkowitsch states that it has a more marked tendency to gum than Southern sperm oil.

The low viscosity of the sperm oils at 60° F. distinguishes them from many other fatty oils, and is the reason why these oils maintain their viscosity better than other fatty lubricating oils with rise of temperature, as shown in the following table.

Table XLIX.—Viscosity of Sperm, Olive, and Rape Oils.

Oil.	60° F.	100° F.	150° F.	212° F.
	Absolute Viscosity (Poises).			
Sperm, ...	0·420	0·185	0·085	0·046
Olive, . . .	1·008	0·377	0·154	0·070
Rape, ...	1·176	0·448	0·188	0·085
	Comparative Viscosities.			
Sperm, ...	100	44·5	20·2	11·0
Olive, ...	100	37·4	15·3	6·9
Rape, ...	100	37·7	15·8	7·2

Porpoise Jaw Oil; Dolphin (Blackfish) Jaw Oil, and "Melon" Oil.—These very similar and remarkable oils are obtained from the soft fat of the head and jaw of two marine animals belonging to the family *Delphinidæ*, viz. the common porpoise, *Delphinus phocæna*, and the bottlenose dolphin, *Delphinus globiceps*. The fat is first washed in fresh water, then put into covered tins and heated for several hours in a closed digester with steam under the pressure of about ten pounds per square inch. The tins are then opened, and the liberated oil is poured off from the coagulated membrane and washed with water. It is then exposed to a low temperature, and the portion which remains fluid is separated. This oil, carefully strained to remove all solid fat, is a straw-yellow, limpid liquid. It is specially prepared in the United States for lubricating watches and other delicate mechanism, and commands a very high price. Chemically, it consists largely of the glycerides of valeric and other volatile fatty acids of the acetic series.

"Melon Oil" derives its name from the shape of the mass of fat taken from the head of the dolphin, reaching from the spout-hole to the end of the nose, and from the top of the head to the upper jaw. When taken off in one piece it has the shape of a half water-melon, weighs about 25 lbs., and yields about 6 quarts of oil.

of sperm oil from the body, and 1·53 and 2·57 per cent., respectively, from two samples from the head; he found 2·56 per cent. in two samples of Arctic sperm oil.

[1] *Analysis of Oils, etc.*, ii. (1922), pp. 875 and 876.

Specimens of these oils, and of the crude oils from which they are obtained, have been examined by Moore,[1] with the following results:—

TABLE L.—PROPERTIES OF PORPOISE AND DOLPHIN JAW OILS.

	Description of Oil.	Saponification Value %.	Hehner Value %.	Total Volatile Fatty Acids as Valeric Acid %	Reichert Value; c.c. required by 2·5 grms. of oil.	Iodine Value %.
1	Porpoise jaw oil, skimmed and strained.	25·37	72·05	19·91	47·77	49·6
2	Porpoise jaw oil, skimmed and strained.	27·23	68·41	24·30	56·00	30·9
3	Dolphin jaw oil, skimmed and strained.	29·00	66·28	28·17	65·92	32·8
4	Porpoise jaw oil, unstrained.	14·39	96·50	1·64	2·08	76·8
5	Dolphin body oil.	19·73	93·07	2·71	5·60	99·5

A sample of porpoise jaw oil examined by Steenbuch had a Reichert-Meissl value of 131·6.

A small sample labelled "*Superfine Watch Oil*," manufactured by Ezra Kelley of New Bradford, Mass., obtained from a Derby watchmaker, had a pale golden yellow colour, a sickly odour, and gave the following results:—

Sp. gr. at 60° F.,	0·930.
Viscosity at 60° F.	Thicker than sperm oil. Comparative runnings from a 5 c.c. pipette showed the viscosity to be about 1·3 times that of sperm oil; =about 0·55 poise.
Reichert-Meissl value, 115·1.	
Unsaponifiable matter, 10·6%.	(Easily soluble in 90 per cent. alcohol, and resembling in appearance the wax alcohols of sperm oil.)

C.—"BLOWN" OILS.

The blown oils used for lubrication, also known commercially as "base oils," are usually rape, whale, or fish oils,[2] which have been artificially thickened by a process of limited oxidation, resulting from the forcing of a current of air through the heated oil. The oil, contained in a tall cylindrical iron vessel, is first raised to a temperature of 170°–190° F., or even higher, by a steam-coil. Air is then blown through it, at first cautiously, to avoid too rapid a rise of temperature and frothing over of the contents of the vessel, afterwards more vigorously until the required viscosity is attained. Steam is shut off before commencing to blow air, as, by the process of oxidation, sufficient heat is evolved not only to maintain but to raise the temperature of the oil, and, in order to avoid too great a rise of temperature, provision should be made for passing, if necessary, a current of cold water through the steam-coil. Veitch Wilson states[3] that the temperature is usually allowed to rise to

---

[1] *Jour. Amer. Chem. Soc.*, xi. (1889), p. 155.

[2] The particular oil chosen for blowing is largely dependent upon the availability and price of the oil.

[3] Carpenter and Leask, *Soap, Candles, Lubricants, etc.*, pp. 268–272.

200°–250° F., according to whether the quality of the product or the time occupied in the process is of the greater importance; the time may thus vary from eighteen to forty-eight hours. As a rule, the maximum temperature should not exceed 230° F. Very irritating vapours containing acetic and acrylic acids are given off during the early stages of the process, and are conveyed away by a pipe in the cover of the vessel; at the end of the blowing the fumes are comparatively innocuous. The oil at first bleaches until almost colourless, and then darkens in colour.

Oils thus treated increase in density as well as in viscosity, and the blowing is continued until the desired specific gravity is attained. According to Veitch Wilson, the blown oils produced commercially for lubrication range in specific gravity from 0·955 to 0·985 at 60° F., and their viscosity at 180° F. ranges from that of castor oil at 60° F. to about four or five times that of castor oil. This high viscosity, coupled with their miscibility with mineral oils, has led to their being termed "soluble castor oils."

Blown oils have a characteristic nauseous odour. Though sparingly soluble in alcohol, they are somewhat more soluble than the untreated oils, and they readily dissolve in petroleum spirit. They do not mix with mineral lubricating oils in all proportions, a certain minimum amount (usually 20–30 per cent.) of blown oil being necessary to give a clear solution; this minimum is greater the lower the temperature, so that a mixture which is clear when warm may separate on cooling, and it varies according to the specific gravity and origin both of the mineral oil and of the blown oil. Jenkins considers that it is the blown oil, rather than the mineral oil, which is the solvent in such mixtures. Thus a mixture of four parts mineral oil and one part blown oil may refuse to blend completely, but if the mineral oil constituent be reduced in proportion somewhat, a perfect mixture may be obtained.

The nature of the physical and chemical changes which occur during the blowing process has been studied by Fox and Baynes,[1] Thomson and Ballantyne,[2] Lewkowitsch,[3] Procter and Holmes,[4] and quite recently by C. H. Thomson,[5] but is still imperfectly understood. Hydroxylated compounds are formed, the acetyl value of the oil largely increases, the specific gravity and refractive index increase, and the iodine value diminishes. Thus, the (Wijs) iodine value of commercial rape and cottonseed oils blown to a sp. gr. of 0·975 ranges from 50 to 75 per cent. (Jenkins). Glycerides of insoluble fatty acids become largely converted into glycerides of soluble, chiefly non-volatile acids, and the saponification value of the oil is increased. Thus, the percentage of insoluble fatty acids obtained from blown rape and cottonseed oils of sp. gr. 0·975 by saponifying, acidifying, and shaking with methylated ether ranges from 89 to 92 per cent. (Jenkins). There is an increase, which may be very large, in the percentage of free fatty acid, and the percentage of unsaponifiable matters is reduced, in the case of some oils considerably. The flash-point of the oil is lowered considerably by blowing, that of blown rape and cottonseed oils of sp. gr. 0·975 ranging from 300°–380° F. (closed test), or about 100° F. lower than that of the original oils (Jenkins). The evolution of heat in Maumené's test is also much increased. The mixed fatty acids from blown oils are largely oxidised acids insoluble in petroleum ether, and are also found to contain lactones. Jenkins finds that the melting-point of the mixed fatty acids generally remains sufficiently near that of the acids

---

[1] *Analyst*, xii. (1887), p. 33.

[2] *Jour. Soc. Chem. Ind.*, xi. (1892), p. 506.

[3] *Analyst*, xxiv. (1899), p. 323; xxvii. (1902), p. 139.

[4] *Jour. Soc. Chem. Ind.*, xxiv. (1905), p. 1287.

[5] *Analyst*, li. (1926), p. 177.

from the original oil to indicate the nature of the latter. The results in Table LI. were obtained by Thomson and Ballantyne, and those in Tables LII. to LV. by Lewkowitsch.

TABLE LI.—CHEMICAL CHANGES PRODUCED BY BLOWING (*Thomson and Ballantyne*).

Chemical and Physical Data.	No 1. Pure Rape Oil.	No 2 Partially Blown Rape Oil prepared from No. 1.	No 3. Blown Rape Oil prepared from No 1.	No. 4. Commercial Blown Rape Oil.	No. 5. Commercial Blown Cotton seed Oil, 'Lardine.'	No. 6. Pure Sperm Oil.	No. 7. Blown Sperm Oil prepared from No. 6.
Sp. gr at 60° F (15·5° C)	0·9141	0·9275	0·9615	0·9672	0·9740	0·8799	0·8989
Free (oleic) acid, %	5·10	5·01	7·06	4·93	3·38	1·97	3·27
Saponification value, %	17·39	18·30	19·49	19·77	21·32	13·04	14·23
Insoluble acids (Hehner value), %	94·76	..	85·94	82·40	84·97	..	..
Soluble non-volatile acids, %	0·52	..	9·20	11·16	9·00	..	..
Soluble volatile acids, %		..	0·82	1·90	1·04	..	..
Iodine value, %	100·5	88·4	63·2	63·6	56·4	82·1	67·1
Specific temperature reaction,	135	..	..	253	227	..	..
Unsaponifiable matter, %	0·65	..	0·76	2·80	1·00	36·32	34·65
Fatty Acids.							
Iodine value of insoluble acids,	..	..	66·5	70·2	62·7	..	..
Molecular weight of insoluble acids,	..	..	327	317	296	..	..
Molecular weight of soluble non-volatile acids,	..	..	241	..	..	..	..
Molecular weight of soluble volatile acids,	..	..	72	76	104	..	..

TABLE LII.—CHARACTERISTICS OF COMMERCIAL "BLOWN" OILS (*Lewkowitsch*).

Blown Oil.	1.	2	3.	4	5.	6	7.	8.	9.	10.	11.	12.	13.	14.
	Acid value.	Sap. Value.	2 – 1.	Iodine Value.	Total Soluble Acids in Terms of KOH.	Specific Gravity.	Unsaponifiable Matter.	Oxidized Acids.	Hehner Value.	Acetyl Value. Apparent.	Acetyl Value. True.	Sap. Value of Acetylated Oil.	Hehner Value after Acetylation	12 – 2.
	Per mille	Per mille.	Per mille.	Per cent.	Per mille.		Per cent.	Per cent.	Per cent	Per mille.	Per mille.	Per mille.	Per cent.	
Ravison rape, .	10·47	198·31	187·84	72·66	35·89	0·9685	1·23	21·22	83·52	88·37	52·93	243·2	..	44·9
East India rape,	13·25	215·57	202·32	61·92	56·26	0·9623	0·93	20·74	82·18	102·87	46·61	253·33	..	37·76
Cottonseed, .	9·41	224·59	215·18	65·74	46·49	0·9785	1·37	29·39	82·59	110·73	64·29	273·30	83·85	48·71
Maize, . .	7·33	208·63	201·30	90·7	49·13	0·9806	2·28	31·93	82·34	113·16	63·37	268·75	..	60·1

C. H. Thomson has recently published[1] results obtained by blowing commercial shark oil on a large scale under works conditions. About four tons

---

[1] *Analyst*, li. (1926), pp. 177–180.

TABLE LIII.—CHARACTERISTICS OF MIXED FATTY ACIDS FROM BLOWN OILS (*Lewkowitsch*).

Acids from Blown Oil.	1. Acid Value	2 Sap. Value.	3. 2 − 1.	4. Iodine Value.	5. Total Soluble Acids in Terms of KOH.	6. Hehner Value.	7. Acetyl Value. Apparent	8 Acetyl Value. True	9. Sap. Value of Acetylated Acids.	10. 9 − 2.	11. Hehner Value of the Acetylated Acids.
	Per mille.	Per mille.	Per mille	Per cent	Per mille	Per cent.	Per mille.	Per mille.	Per mille		Per cent
Ravison rape, .	175 14	191·7	16·56	73·31	7·26	..	50·0	42·75	227·4	35·7	..
East India rape,	171·93	190 0	18·07	60·80	10·71	..	66·2	55·5	237·8	47·8	..
Cottonseed, .	194·79	210 46	15 67	72·43	12 94	93·76	67 35	55·67	254·8	44·4	92·11
Maize, . .	192·8	209·93	17·13	88·08	29·45	86·4	88·97	59 52	267·3	57·37	..

TABLE LIV.—CHARACTERISTICS OF OXIDISED ACIDS FROM BLOWN OILS (*Lewkowitsch*).

Oxidised Acids from Blown Oil	1. Acid Value.	2. Sap. Value.	3 2 − 1.	4. Iodine Value.	5. Total Soluble Acids in Terms of KOH.	6. Hehner Value.	7. Acetyl Value. Apparent.	8. Acetyl Value. True.	9. Sap. Value of Acetylated Acids.	10. 9 − 2.	11. Hehner Value of Acetylated Acids.
	Per mille	Per mille.	Per mille.	Per cent.	Per mille.	Per cent.	Per mille.	Per mille.	Per mille.		Per cent.
Ravison rape, .	171·5	208·0	36 5	49 14	22 56	..	102·5	80·0	307·5	99·5	..
East India rape,	173 3	211·3	38·0	39·79	22·35	..	128 0	105 65	315·9	104·6	..
Cottonseed, .	174·7	220·71	46·01	48·6	36·12	..	154·4	118·28	322·69	101·98	83·85
Maize, . .	171·94	215 74	43·60	70 87	48·0	93 53	173 58	126 68	326·45	111·11	..

TABLE LV.—CHARACTERISTICS OF FATTY ACIDS FREED FROM OXIDISED ACIDS (*Lewkowitsch*).

Acids from Blown Oil.	1. Acid Value.	2. Sap. Value.	3. 2 − 1.	4. Iodine Value.	5. Total Soluble Acids in Terms of KOH.	6. Hehner Value.	7. Soluble Acids	8. Acetyl Value. Apparent.	9. Acetyl Value. True.	10. Sap. Value of Acetylated Acids.	11. 10 − 2.	12. Hehner Value of Acetylated Acids
	Per mille.	Per mille.	Per mille.	Per cent.	Per mille.	Per cent.	Per mille.	Per mille.	Per mille	Per mille.		Per cent.
Ravison rape, .	176 8	188·6	11·8	61·88	6·97	..	6·75	42·5	35·53	220·3	31·7	..
East India rape,	166·6	176·8	10·2	55·93	10·09	..	8·85	47·13	37·54	219·2	42·95	..
Cottonseed, .	188·0	196·15	8·15	56·02	11·0	..	7·27	33·69	22·69	232·0	33 6	96 17
Maize, . .	172·37	177·68	5·31	85·52	6·14	85·54	7·54	43 8	36·7	228·76	50·52	..

of oil were blown at a temperature of 240° F., and samples were taken at intervals and subjected to analysis. The results are given in Table LVA. In these tests the viscosity was determined, and the results are specially valuable as the chemical changes undergone by the oil are shown in relation to the rise in viscosity as well as specific gravity. The tests made also include determinations of the soluble and insoluble volatile acids, and show that while the former increase considerably as a result of the blowing, the latter do not increase much. Shark oil was selected for these tests owing to its high content of unsaponifiable matter, and it will be noted that this diminishes as a result

TABLE LVA.—CHANGES PRODUCED BY BLOWING SHARK OIL
(*C. H. Thomson*).

	Untreated Oil.	Blown Oil. Samples taken at Different Stages of Blowing.						Same Shark Oil blown under different Conditions.
Specific gravity at 60° F.,	0·914	0·971	0·984	0·986	0·988	0·990	0·992	0·993
Viscosity. Efflux time (Redwood) in seconds at 200° F., . . .	50	190	460	700	900	1300	1800	3000
Iodine value, per cent., .	130·32	78·01	63·28	61·40	57·33	55·76	54·82	62·02
Saponification value, per mille, . . .	163·62	197·47	205·62	209·90	214·06	217·75	218·84	214·26
Acid value, per cent., .	2·39	8·95	13·32	17·31	17·90	18·89	20·29	16·31
Free fatty acid, as oleic acid, per cent., . .	1·20	4·50	6·70	8·70	9·00	9·50	10·20	8·20
Reichert-Wollny number,	0·30	3·60	5·50	6·20	6·50	6·70	7·50	5·30
Polenske number, . .	0·40	0·50	0·60	0·60	0·70	0·80	0·90	0·50
Unsaponifiable matter, per cent., . . .	15·64	12·92	11·50	11·01	10·60	10·23	10·02	12·24
Refractive index at 40° C.,	1·4680	1·4717	1·4742	1·4745	1·4746	1·4748	1·4751	1·4766
Ether-insoluble bromides, per cent., .	29·35	Nil	Nil	Nil	Nil	Nil	Nil	Nil

TABLE LVB.—SAPONIFICATION PRODUCTS OF UNTREATED AND BLOWN SHARK OIL (*C. H. Thomson*).

	Untreated Oil.	Blown Oil.	
	Per cent.	Per cent.	Saponification Equivalent of Acids from Blown Oil.
Fatty acids, insoluble in hot water, . .	83·56 *	73·20	284
Fatty acids, soluble in hot, insoluble in cold water, ...	..	1·96	212
Non-volatile fatty acids, soluble in cold water	..	3·12	160
Volatile acids, soluble in cold water, . .	0·07	1·47	67
Insoluble volatile acids, ...	0·15	..	..
Acids insoluble in ether, soluble in alcohol, .	..	1·56	270
Glycerol, ...	6·02	6·25	..
Unsaponifiable matter, ...	15·64	10·02	..
Unknown organic matter, . . .	0·50	6·30	..

* Saponification equivalent, 286.

of the blowing. Thomson suggests that the large increase in acid value may be due to the oxidation of some of the unsaponifiable constituents of the oil.

Further analyses were made of the saponification products of the untreated shark oil and of the blown oil of specific gravity 0·992, and results were obtained as shown in Table LVB.

That the results of analysis of a blown oil are dependent upon the conditions of blowing is clearly shown by another trial blowing of the same shark oil on a somewhat different system. In this trial the oil was blown to approximately the same specific gravity as in the first, but the viscosity was increased to more than 1½ times that of the first blown batch of oil. Many of the other chemical values are also quite different. The figures obtained in testing this oil are given in the last column of Table LVA. on p. 162.

Table LVC. contains further results obtained by C. H. Thomson in large scale blowings of sperm, whale, and cottonseed oils. In one blowing of the sperm oil cobalt oxide was added to the oil, which very much increased the viscosity in relation to the specific gravity; the effect as regards the other characteristics of the blown oil will be seen by reference to the table.

TABLE LVC.—RESULTS OBTAINED BY BLOWING SPERM, WHALE, AND COTTONSEED OILS (*C. H. Thomson*).

	Sperm Oil.			Whale Oil.		Cottonseed Oil.		
	Untreated.	Blown as usual.	Blown with Cobalt oxide.	Untreated.	Blown.	Untreated.	Blown.	Blown.
Specific gravity at 60° F.,	0·880	0·968	0·964	0·920	0·984	0 922	0·967	0·981
Viscosity. Efflux time (Redwood) in seconds at 200° F.,	45	285	380	49	255	50	196	432
Iodine value, per cent.,	82·40	47·01	47·96	116 26	67·97	108·12	74·36	58·35
Saponification value, per mille,	124·70	200·90	204·40	196·00	239·40	192 10	209 07	220·61
Acid value, per cent.,	2·98	24·68	20·41	24·86	32·84	0 81	8·41	11·40
Free fatty acid, as oleic acid, per cent.,	1·50	12·41	10 26	12·50	16·51	0·41	4·23	5·73
Reichert-Wollny number,	0·60	4·50	2·80	0·50	5·20	0·20	4·40	6·40
Polenske number,	0·70	0·80	0·70	0·70	0·90	0·40	0·50	0·50
Unsaponifiable matter, per cent.,	39·20	24·43	26·70	2·41	2·04	..	..	..
Refractive index at 40° C.,	1·4568	1·4702	1·4704	1·4640	1·4713	1·4648	1·4711	1·4727
Ether-insoluble bromides, per cent.,	3·54	Nil	Nil	22·60	Nil	..	..	..

The blown oils chiefly produced for the manufacture of lubricants were, until recently, blown rape oil, blown ravison oil, blown mustard oil, and blown cottonseed oil or "lardine." During recent years, blown whale and fish oils have almost entirely replaced blown cottonseed oil. Blown rape oil is, however, still largely used. Cottonseed oil is the most easily thickened by blowing, but the blown oil is inferior as a lubricant to blown rape or mustard oils. Blown cottonseed oil is frequently more or less turbid, and deposits a sediment on standing. Blown cottonseed oil does not mix so freely with mineral lubricating oil as do blown rape and mustard oils and blown whale oil, and the miscibility of all oils becomes less the more they are blown. Blown oils mix more readily with Scotch than with American or Russian mineral oils of similar viscosity. Lewkowitsch states that they mix still more readily with

Borneo oils.[1] Blown cottonseed oil will not mix with Russian mineral oil, but it easily mixes with Texas oils.

In an experiment made by Jenkins,[2] an attempt was made to blend a mixture of the following:

Blown oil, ...	3 vols.
Heavy Russian mineral oil (sp. gr. 0·911), . . .	3 „
Pale mineral oil (sp. gr. 0·9), ...	8 „

Seven different pale mineral oils were tried, two of which were Scotch oils absorbing 27·9 and 23·4 per cent., respectively, of iodine; the others were American or Russian oils absorbing from 2·8 to 9·1 per cent. of iodine. The only oil which blended perfectly was the Scotch oil which absorbed the most iodine, next came the other Scotch oil of lower iodine value.

In illustration of the superior miscibility of blown rape oil as compared with blown cottonseed oil, Jenkins further states that he found that a clear mixture is obtained by blending at ordinary temperature 75 volumes of Scotch mineral oil with 25 volumes of blown cottonseed oil of sp. gr. 0·975. If the percentage of Scotch mineral oil in the mixture be increased to 80, separation into two layers is pronounced. If blown rape oil be used instead of blown cottonseed oil, the mixture will remain clear in all proportions, but this is not the case if American mineral oil be used instead of Scotch.

Blown oils in admixture with mineral oils are very largely used as lubricants; and for certain purposes, such as the lubrication of marine engines, such mixtures appear to supply a distinct want. The mineral oils entering into their composition are usually those of low or moderate viscosity. Whether such mixtures are as suitable for railway work as those produced by mixing mineral oils of greater viscosity with ordinary refined vegetable or animal oils, such as rape oil or tallow oil, has never been satisfactorily proved, so far as the authors are aware. Nevertheless, it is a fact that some large railway companies use, or have used, one kind of mixture and some the other.

D.—ROSIN OIL.

Rosin oil is the principal product of the destructive distillation of common rosin or colophony. The distillation is conducted in cast-iron stills heated by a fire below. The charge of rosin varies from 3 to 10 tons. The first portion of the distillate, boiling between 80° and 250° C. (176° and 482° F.), and amounting to about 2½ to 5 per cent. of the weight of the rosin, is a very complex, limpid liquid, known as resin spirit, which is used for making varnish and for the adulteration of oil of turpentine. This is followed, at a temperature above 300° C. (572° F.), by the rosin oil, which, if the distillation be pushed to dryness, may amount to 85 per cent. of the total products. About 2½ per cent. of water containing a little acetic acid passes over during the distillation, and a considerable quantity of gas is given off, consisting of oxides of carbon and hydrocarbons of the ethylene series. A residue remains in the still, consisting of either pitch or coke, according to the stage at which the distillation is arrested.

Crude rosin oil is a viscid liquid of more or less dark-brown colour, with a strong, usually blue or violet, fluorescence. It always contains a considerable proportion of rosin acids which have distilled over unchanged. By heating to a temperature of 150° C. (302° F.) for three or four hours, the last traces of spirit are removed, the oil loses from 1 to 5 per cent. in weight and acquires

---

[1] *Chem. Technology*, iii. (1923), p. 190.

[2] Private communication.

a green fluorescence. By well boiling with water to expel acetic acid, and redistilling once or twice from caustic soda, refined rosin oils are obtained, which are pale in colour. Fluorescence or bloom is destroyed by exposing the oil to the air and sunlight in shallow vessels, or by treatment with hydrogen peroxide, nitro-naphthalene, etc.

Commercial rosin oils usually range in specific gravity, according to Lewkowitsch, from about 0·96 to 0·99, but oils are met with having a specific gravity as high as 1·01. Rosin oils are strongly dextro-rotatory, the rotation varying from 30 to 40 degrees or more in a 100 mm. tube. These properties, their ready solubility in acetone, and certain colour reactions, are made use of to distinguish rosin oils from mineral oils (see p. 374).

Rosin oils, when titrated with alcoholic potash, neutralise an amount of alkali which varies according to the quantity of rosin acids they contain. According to Leeds,[1] the crude oils neutralise from 2·8 to 4·4 per cent. of potash (KOH), but by careful distillation or refining they can be obtained almost neutral. Esters or anhydrides are also present, which do not neutralise alkali in the cold, but can be saponified by boiling with potash, as in determining the saponification value (p. 299). The rosin acids can be obtained from the soap solution, gravimetrically, by acidifying and shaking with ether, after removing the neutral rosin oil as described in Chapter VIII. p. 302. Owing to the presence of rosin acids, commercial rosin oil has the property of combining with calcium hydroxide and other bases, forming peculiar greasy bodies. This property is utilised in the manufacture of *rosin grease* (see p. 171).

The chemical composition of rosin oil is not fully known. According to Renard,[2] the neutral oil, purified from acid substances by washing with caustic soda solution, consists to the extent of about 80 per cent. of *diterebenthyl* ($C_{20}H_{30}$), boiling at 343°–346° C. (649°–655° F.); about 10 per cent. is *diterebenthylene* ($C_{20}H_{28}$), and about 10 per cent. *didecene* ($C_{20}H_{36}$). The hydrocarbon $C_{20}H_{30}$ obtained by Renard, when exposed to the air in thin layers for five days, adsorbed about one-tenth of its weight of oxygen, and dried to a varnish.

Rosin oil is used as a lubricant for batching jute. It is not suitable for the lubrication of machinery, but is used to adulterate mineral and other lubricating oils. The methods for its detection are given in the chapters following.

E.—THICKENED MINERAL OILS.

Mineral oils are sometimes artifically thickened by dissolving soap in them. Aluminium soap is usually employed for this purpose. It is prepared by saponifying whale, cottonseed, or lard oil, or by neutralising commercial oleic acid, with caustic soda, and pouring the solution of soda soap, gradually, into a solution of common alum, stirring all the time. Crude aluminium oleate separates out as an insoluble, gummy precipitate, which is pressed free from water and heated with about four times its weight of mineral oil until dissolved. The gelatinous material thus produced is sold for thickening oils under the names "*viscom*," "*oil-pulp*" or "*thickener*," "*gelatin*," etc. A comparatively small quantity melted into a mineral oil will be found on cooling to have considerably increased its viscosity.

Mineral oils thickened in this way can easily be recognised by the tendency to form threads when the oily cork is removed from the bottle, and by their peculiar non-homogeneous appearance, resembling a mixture of oil and jelly. The spurious viscosity rapidly diminishes when the oil is heated. Schweitzer

---

[1] *Jour. Soc. Chem. Ind.*, xi. (1892), p. 308.

[2] *Jour. Chem. Soc.*, 1888, Abs., p. 161.

regards this addition to mineral oils as pure adulteration, and states that experience has shown that in contact with water and steam the aluminium soap is precipitated and clogs the machinery. On the other hand, Bloede states that by the presence of aluminium soap the adherence of the lubricant to metal surfaces is much increased.

Aluminium soap is not the only soap used as a thickener. A sample of thickened oil analysed by one of the authors had the following composition :-

Russian mineral oil (0·909),	97·08
Neutral fatty oil,	0·58
Fatty acids as soap, etc.,	1·97
Ash, chiefly $CaCO_3$,	0·12
	99·75

In this case about 2 per cent. of lime soap was the thickener used. The Russian oil, freed from soap by washing with hydrochloric acid, had a viscosity of 60° F., about three times that of refined rape oil. The 2 per cent. of soap made it so viscid at 60° F. that it would not flow through the viscometer. The sample had the appearance of a non-homogeneous mixture of jelly and oil, and formed threads in dropping.

F.—CUTTING OILS, SOLUBLE OILS, AND CUTTING COMPOUNDS.

The liquids used for the lubrication of cutting tools in the machining of metals are either oils, such as lard oil, rape oil, or mixtures of these with mineral oil, or they are emulsions composed of a mixture of oil, soap, and water. These liquids are required not only for lubricating the cutting tool and producing a smooth finish on the work, but also for carrying away the heat produced, preventing oxidation (rusting and corrosion) of the metal, and in some cases for washing away the fragments of metal detached by the tool. The oils used for these purposes are known as *Cutting Oils*, and the mixtures used for preparing the cutting emulsions are known as *Soluble Oils* and *Cutting Compounds* (Screwing Compounds, etc.).

In one large machine shop the following were at one time used : (1) *on slotting and other machines doing light work*, a simple solution of soap and soda, made by dissolving in 100 gallons of water 10 lbs. of soft soap and 10 lbs. of washing-soda, these proportions being varied somewhat according to the work, and a little oil sometimes added to promote smooth finish and prevent rusting ; (2) *on semi-automatic machines*, where the work is light and the object principally to keep the tool cool, a cutting emulsion ; and (3) *on full automatics and machines doing heavy work and making deep cuts*, a blended cutting oil having at 60° F. about the same viscosity as lard oil. In the same shop it is now customary to use a cutting emulsion for all drilling, milling, sawing, and general lathe work, and a cutting oil on automatic tools and for tapping and screwing.

In many automatic machines a cutting emulsion is inadmissible, and a cutting oil must be used, as the liquid finds its way into the bearings and must also be of such a nature as to prevent rusting of the work and of the machine. Emulsions are liable to form deposits on the bearings and working parts, and rusting is liable to occur when emulsions are used.

The viscosity of the cutting oil employed is varied to suit the work, and the proportion of mineral oil in the mixture can also be varied. Table LVD. contains analyses of three blended cutting oils of different viscosities : No. 2, which represents a well-known and largely used brand, has about the same viscosity as lard oil; it probably is a mixture of lard oil with a mineral spindle oil of about the same viscosity. No. 1 is a blend of lard oil with an asphaltic base mineral oil of higher viscosity and low freezing-point. No. 3 is a blend of lower viscosity.

TABLE LVD.—ANALYSES OF CUTTING OILS.

	1.	2.	3.
Mineral oil,	82·7	81·0	82·0
Neutral glyceride,	14·4	16·1	18·0
Free fatty acid,	2·9	2·9	
	100·0	100·0	100·0
Efflux time (Redwood) seconds at 60° F.,	615	418	264
Efflux time (Redwood) seconds at 100° F.,	174	142	..
Flash-point (closed test),	330° F.	320° F.	..
Cold test,	Fluid at 0° F.	10°–13° F.	..
Specific gravity at 60° F.	0·9196	0·8897	0·9019

Soluble oils and cutting compounds which, when mixed with water, form cutting emulsions, are of varied composition. They usually contain, besides mineral oil, soap and water, considerable quantities of free fatty acids, and variable proportions of neutral saponifiable oil. It is very desirable that the composition of these articles should be controlled by analysis. The following are analyses of soluble oils:- -

Mineral oil and rosin oil,	43·7
Saponifiable oil,	17·7
Free fatty acid,	22·4
Ammonia and soda soaps,	6·7
Impurities and loss,	1·1
Water,	8·4
	100·0

Mineral oil (0·897),	62·0
Saponifiable oil,	1·6
Free fatty acid,	13·5
Soda soap (anhydrous),	7·9
Water,	15·0
	100·0

Mineral oil (0·921),	72·3
Saponifiable oil,	2·4
Fatty acids, free and as soap,	16·9
Ammonia,	0·7
Impurities and loss,	1·3
Water,	6·9
	100·0

Mineral oil (0·931),	75·9
Saponifiable oil,	2·1
Free rosin acids,	4·1
Rosin, soda and ammonia soaps, etc.,	7·0
Water,	10·9
	100·0

Cutting compounds, so-called, differ from the cutting oils in being soft solids of pasty or creamy consistency and they contain much more water. Two samples of a well-known brand had the composition shown in Table LVE.

TABLE LVE.—ANALYSES OF CUTTING COMPOUNDS.

	1.	2.
Mineral spindle oil,	32·4	30·7
Saponifiable oil,	0·4	0·6
* Anhydrous soda soap,	17·1	19·0
Free fatty acid,	3·4	1·3
Undetermined and loss,	1·1	1·4
Water,	45·6	47·0
	100·0	100·0
* Melting-point of fatty acids from soap,	9°–10° C.	17°–18° C.
Iodine value of „ „ „ „	102 per cent.	87 per cent.

Although the analyses are very similar, it was found in practice that a much larger quantity of No. 2 was required than of No. 1, and this was due to a difference in the composition of the soap, No. 1 being much more viscous than No. 2.

A sample received at a later date had the following composition :—

Mineral spindle oil,	26·6
Saponifiable oil,	1·2
* Anhydrous soda soap,	9·0
Free fatty acid,	4·0
Silica,	2·0
Undetermined and loss,	1·2
Water,	56·0
	100·0
* Melting-point of fatty acids from soap,	29·5° C.
Iodine value of „ „ „ „	113 per cent.

Silicate of soda had been used in making this compound, and the colloidal silica set free by the fatty acid produced a fictitious viscosity in the paste, which disappeared when the compound was mixed with water for use on the machines and caused complaints of inefficiency.

The above analyses are sufficient to show the general composition of these articles and the desirability of purchasing them to specification, but further information is needed before specifications can be suggested, and this must be based upon comparative trials of known mixtures. A variety of fats and oils are used in making the soaps employed, and systematic experiments are needed to find out the relative merits of these different soaps, also in regard to the value of the free fatty acid and the most suitable proportion of it, as any excess of acid increases the corrosive effect of the liquid on the metals and machines.

For further information, reference should be made to the *Memorandum on Cutting Lubricants and Cooling Liquids, and on Skin Diseases produced by Lubricants*, drawn up for the Lubrication Inquiry Committee by Mr. T. C. Thomsen and Dr. Bridge, and published by the Department of Scientific and Industrial Research (1918).

G.—SEMI-SOLID LUBRICANTS. GREASES.

Under this heading are included manufactured lubricants which form more or less soft solids at ordinary atmospheric temperatures, but which melt and become fluid at higher temperatures. They are used chiefly for the lubrication of axles, heavy bearings, shafting, etc., in positions not readily accessible, or where oil is unsuitable or not readily applied, or the working temperature is high (*e.g.* hot necks), or where a cheap lubricant is required. Lubricating greases usually consist of mineral oil, or a mixed oil in which mineral oil, rosin oil, coal-tar oil, or an animal or vegetable oil or fat may be an ingredient, thickened or emulsified with sufficient soap, or soap and water, to form at ordinary temperatures a consistent grease. Solid lubricants (graphite or talc), or in the cheaper greases mere fillers or loading materials (china clay, gypsum, etc.) may be included in the mixture. Nitrobenzene (oil of mirbane), or other scenting material, is frequently added to disguise the nature of the ingredients. These greases may be classified in the following types :—

Type A. *Boiled greases,* including—

(1) Lime soap greases, containing some water.
(2) Soda soap greases in which the lime of type A (1) greases is replaced by soda.
(3) Soda soap greases, boiled or merely cooked a short time only and containing a high percentage of water.
(4) Block greases ; soda soap greases from which all water has been boiled out.

Type B. *Rosin greases,* in which rosin acids are combined with lime to form a soap and the ingredients are mixed cold, no heat being applied.

Type C. *Products loosely termed greases,* which are mixtures of ingredients and do not contain soap thickeners.

Manufacture.

(*a*) **Boiled Greases.**—I. J. Redwood[1] has described in detail a process of manufacturing a grease of type A (1) from mineral oil, horse fat, and lime, from which the following is abbreviated.

The fat is melted in a steam-jacketed kettle provided with a mechanical stirrer, and is raised to a temperature of about 180° F. Cream of lime is then added in sufficient quantity to saponify the fat, and the whole is boiled and stirred until saponification is complete and a little of the soap rubbed down

---

[1] *Lubricants, Oils, and Greases.* Spon, London and New York.

in the palm of the hand exudes only a few minute drops of water. A portion of the mineral oil, at a temperature of about 190° F., is then slowly sprayed on to the soap in the kettle, and is thoroughly incorporated with it by continual stirring; a further quantity of mineral oil is then sprayed in cold, until the desired consistency is reached. After continuing to stir for about half an hour longer, the still hot contents of the kettle are run off through a cooling pipe into a grinding mill, in which all lumps are reduced and the grease is made of a uniform smooth consistency. It is then packed in casks.

The foregoing description is sufficient to show the general method of manufacturing greases of this type, which may be modified in detail. Thus, English-made greases are not, as a rule, milled, but are run direct from the kettle into the casks. The percentage of water in the finished grease depends upon the quantity added in saponifying the oil or fat and the length of time the grease is boiled. Lime soap greases, type A (1), of good quality should contain less than 5 per cent. of water, and normally melt at 190°-210° F. Soda soap greases, type A (2), should also contain a low percentage of water, and melt at about the same temperature as the lime soap greases, or rather higher. Type A (3) greases are boiled for a short time only or merely cooked (*i.e.* heated short of boiling), and, owing to their high water content, have a lower melting-point than the greases of type A (2). Railway wagon greases are of this type. Both these types of soda soap greases are made in the same way and in the same plant as the lime soap greases, caustic soda, usually in the form of liquor of 60-90° Twaddell, being the saponifying agent instead of milk of lime.

Block greases, type A (4), are made essentially in the same way as the foregoing types, but are finished at a higher temperature so as to expel all water. The boiling-pan or kettle may be heated direct by gas, instead of being steam jacketed. The finished grease is run out hot into moulds, in which it is allowed to solidify.

The following are some analyses of lime and soda soap greases which have come under the authors' notice:—

Two well-known brands of lime soap-thickened grease gave the analytical results shown in Table LVF.

TABLE LVF.—ANALYSES OF GREASE.

	1.	2.
Mineral oil,	68·7	78·4
Saponifiable oil,	8·7	3·5
Fatty acids as soap,	17·0	12·6
Free (oleic) acid,	1·1	1·3
Lime (CaO),	1·4	1·3
Inert mineral matter,	·1	...
Water,	3·4	1·7
	100·4	98·8
Melting-point,	150° F.	162° F.

Grease No. 2 was used to lubricate the shafting in a mill, and the attempt was made to substitute No. 1, which was considerably lower in price. But as the bearings on which No. 1 was tried ran at a much higher temperature during the trial than previously, although more of the grease was used, it had to be abandoned. Subsequent tests showed that No. 2 grease, when molten and at 212° F., had about three times the viscosity of No. 1.

A motor vehicle grease, which melted at 190°–195° F. without separation, contained :—

Mineral oil (0·909),	79·8
Saponifiable oil,	1·0
Lime soap,	17·6
Undetermined,	1·2
Water,	0·4
	100·0

Table LVI. contains the analyses of some other lime soap greases.

TABLE LVI.—LIME SOAP GREASES. (Axle Greases.)

	1.	2.	3.	4.	
Mineral oil (0·885–0·912),	81·8	72·5	73·4	72·0	74·5
Saponifiable oil,	..	..	1·4	0·5	0·4
Lime soap,	10·0	12·6	14·7	19·5	19·1
Water, by difference,	8·2	14·9	10·5	8·0	6·1*
	100·0	100·0	100·0	100·0	100·1

* Determined.

A lime soap grease, loaded or adulterated with gypsum, gave the following results :—

Hydrocarbon oil (0·898),	63·2
Saponifiable oil,	1·0
Fatty and rosin acids,	5·1
Mineral matter, largely calcium sulphate,	19·2
Water,	9·9
	98·4

Table LVII. contains some analyses of soda soap greases of abnormal composition.

TABLE LVII.—SODA SOAP GREASES.

	1.	2.	3.
Mineral oil (0·886–0·899),	55·00	70·93	42·81
Saponifiable oil or fat,	8·97	2·02	34·38
Soda soap (anhydrous),	16·11	9·30	16·37
Sodium silicate,	...	6·10	4·76
Sodium carbonate,	3·19	...	...
Sodium sulphate,	1·67	...	...
Water, by difference,	15·06	11·65	1·68
	100·00	100·00	100·00

(*b*) **Rosin Greases.**—Rosin greases are made by stirring together rosin oil and slaked lime. One method of preparation consists in stirring into a mixture of rosin oil with mineral oil or coal-tar oil ("grease oil") a percentage of slaked lime made into a cream with water. The mixture is stirred until it thickens very considerably, which occurs in a few minutes. It is then run off into the desired packages to set. Barytes, gypsum, whiting, and other filling materials are also sometimes added.

The formation of rosin grease has been attributed to a supposed property possessed by the unsaturated hydrocarbons contained in rosin oil of combining directly with lime and other bases. This, however, is not the true explanation. Crude rosin oil invariably contains a considerable percentage of rosin acids (undecomposed colophony), which have distilled over with the hydrocarbons, and it is the combination of these acids with the lime, forming a soap when the rosin oil and the lime are stirred together, which is the real cause of the formation of rosin grease. Refined rosin oil, which has been freed from rosin acids, is incapable of forming a grease with lime; on the other hand, the larger the percentage of rosin acids contained in the crude rosin oil, the stiffer the grease which can be formed.[1]

Rosin greases are used to lubricate the iron axles of colliery trucks and road vehicles. They are not suitable for brass bearings, on account of the rapidity with which the grease *acetifies* under the influence of heat and friction.[2] The composition of rosin grease is shown by the following analyses:—

A well-made sample was found to contain:

Mineral oil (0·910),	88·3
Saponifiable oil,	0·7
Rosin acids,	6·0
Lime (CaO),	3·0
Loss at 212° F.,	0·7
	98·7

Another sample:

Mineral oil (0·937),	84·3
Saponifiable oil,	0·9
Rosin and fatty acids,	3·1
Ash (carbonated, contained $CaCO_3$ and $CaSO_4$),	2·3
Water, loss at 212° F.,	9·7
	100·3

A third sample contained:

Mineral oil (0·947),	84·2
Saponifiable oil,	0·7
Rosin acids,	7·5
Lime (CaO),	4·9
Loss at 212° F.,	0·9
	98·2

A sample of rosin grease taken from a private owner's railway wagon was found to contain:

Mineral oil (0·901),	80·5
Saponifiable oil,	1·9
Rosin acids,	8·0
Ash, carbonated, containing $CaCO_3$ and Fe_2O_3,	8·7
Loss at 212° F.,	2·8
	101·9

---

[1] Archbutt, *Jour. Soc. Chem. Ind.*, xx. (1901), p. 1193.

[2] Mills, *Destructive Distillation*, p. 98.

This grease, when kept heated in a gauze cone at 212° F., began to run through the gauze after about $1\frac{1}{2}$ hours, and in 6 hours about 40 per cent. had run through, which was quite fluid on cooling. A soft, sticky, brown mass remained on the gauze. Such grease as this is quite unfit for railway wagons.

The cheaper rosin greases are often heavily loaded or adulterated. One of the authors once examined a grease of this kind, sold for lubricating colliery trams, which contained nearly 50 per cent. of calcium sulphate and 25 per cent. of water.

Another sample contained :

Mineral oil (0·915),	38·5
Rosin acids,	5·2
Mineral matter, chiefly calcium sulphate, with silica, ferric oxide, lime, and some carbon,	47·9
Loss at 212° F. (water),	7·9
	99·5

A sample from which some water had exuded contained :

Mineral oil (0·910),	29·6
Rosin acids,	2·8
Gypsum ($CaSO_4.2H_2O$),	38·2
Lime (CaO),	2·0
Water,	27·3
	99·9

Commercial Descriptions of Grease.

✓1. *Cup Greases* are usually lime or soda soap greases of the types A (1) or A (2), and are used in the various forms of cup lubricator. They are made in a wide range of consistency, including very soft or semi-liquid, soft, medium, stiff, and very stiff, according to the relative percentages of mineral oil and soap contained in them and the viscosity of the mineral oil used. In general, the more mineral oil and the less soap, the softer the grease. The melting-point rises with the stiffness of the grease. The softer and lower melting-point greases are used in gravity feed cups, and the stiffer and higher melting-point greases are used in compression cups of the Stauffer type. Cup greases should be quite free from fillers, such as china clay, etc., but they may contain graphite for certain purposes, and are then called graphite greases (see p. 175).

White Cup Greases are usually made from specially selected fats, such as Australian mutton tallow, with very little mineral oil. They may contain a considerable percentage of unsaponified fat, and are the highest in lubricating value and price of all cup greases. Their melting-points are often higher than those of ordinary cup greases.

2. *Motor Greases*, used in the compression cups, gear-boxes, and transmission gears of some motor vehicles, are of the same type as cup greases. The grease used in gear-boxes should be fairly soft, not too high in melting-point, and should melt without any separation of the soap from the oil. An analysis of a grease of this kind is given on p. 171.

✓ 3. *Axle Greases* may be of either the A or B type. *Railway Wagon Axle Grease* is of the A (3) type, and owing to its special character and the large quantity used is dealt with in a special section on pp. 176–180. *Cart or Road Wagon Axle Grease* is usually a rosin grease of B type, and, owing to the demand for a cheap grease, frequently contains a very large percentage of loading material, as shown by the analyses on p. 173. Better quality grease, of A (1) or A (3) type, is, however, sometimes used for road vehicles.

A good grease for road vehicles, which melted without much separation at about 160° F., was composed of:

Mineral oil (0·902),	88·26
Unsaponified fat,	2·01
Free (oleic) acid,	0·15
Fatty acids combined with lime,	8·13
Lime (CaO),	0·89
Water (loss at 212° F.),	0·40
	99·84

Colliery Tram Axle Greases are used for lubricating the axles of small coal trucks running underground. A cheap, black rosin grease, type B, is generally used, and may contain large percentages of water and filler. The better qualities are often described as *Floating Tram Grease*, denoting absence of filler, so that a lump will float if placed on water. These greases are needed where the trams have to pass through water, as the heavier, loaded greases are more easily washed off the axles.

4. *Fibre or Sponge Greases* are so called because of their fibrous or spongy texture, but they contain no fibrous material of any kind. They are usually greases of type A (2), containing a higher percentage of fatty oils and, therefore, more expensive and of higher lubricating value than ordinary cup greases. Fibre greases of good quality contain very little water, and can be melted and cooled again without altering their consistency. Their melting-points are often very high. Their good lubricating quality fits them for use on heavily loaded bearings, such as those of stone crushers.

5. *Wool or Yarn Greases* are cup or fibre greases containing short lengths of woollen or cotton yarn embodied in the grease. They are used in the gravity cup lubricators of shafting. The grease is melted by the friction heat, and filters through the yarn on to the journal.

6. *Tallow Compound or Suet Substitute* is a very stiff grease of type A (1) or A (2), used for heavy bearing or cold-neck lubrication.

7. *Calender Greases*, used for the lubrication of paper-mill or woven fabric calender rollers, are cup or fibre greases of A (2) type. Where the rollers are heated, a high-melting-point grease is necessary. These greases are sometimes packed in canvas bags, which are applied as pads to the journal.

8. *Ball-bearing Greases* are soft greases which may be composed of pure mineral grease (petroleum jelly), or mixtures of this with mineral oil (type C), or they may be soft cup greases (type A) composed of mineral oil thickened with lime or soda soap. The essential features of such greases are that they must be neutral or faintly alkaline, to prevent corrosion, and free or nearly free from water. A good grease of this kind, made by thickening a mineral spindle oil with lime soap, gave the following results by analysis:—

* Mineral oil (0·898),	77·5
Fatty oil,	2·3
Lime soap,	19·2
Mineral impurity and undetermined,	0·5
Water,	0·5
	100·0

* Efflux time (Redwood) at 60° F., ... 242 seconds.
Melting-point of grease, ... 234° F.

This grease was slightly alkaline in reaction and remained soft on cooling to 32° F. It proved very satisfactory in use, both on ball- and roller-bearings.

A grease supplied for Hoffmann ball-bearings, which had a remarkably high melting-point, was found to be composed of "900/7" mineral oil, thickened with about 13 per cent. of anhydrous soda soap. A little oil commenced to separate at about 144° F., and from this temperature up to 320° F. the separation of oil continued slowly, but very little separated, and even at 320° F. the bulk of the grease did not melt.

9. *Graphite Greases* are usually cup greases containing from 5 to 15 per cent. of graphite. The following is an analysis of a graphite grease:—

Dark petroleum jelly,	61·1
Saponifiable fat,	8·1
Dry soda soap,*	13·9
Graphite,	7·5
Water and loss,	9·4
	100·0

* Includes a little sodium carbonate.

10. *Waterless Block Greases or Tunnel Block Greases*, type A (4), are used for lubricating the propeller shafts of steamships, also for large open bearings and the neck lubrication of cold rolls. They may be supplied in blocks, shaped to fit cavities in the bearings made to receive them. The blocks may be sufficiently hard to resist the full pressure of the thumb, or of a more yielding and plastic nature, so that strips of the grease can be twisted into any shape.

11. *Solidified Oil* is a term sometimes applied to soft, buttery greases of type A, or to block greases.

12. *Cog-wheel or Gear Greases* may be soft consistency greases of either type A or type B; they frequently contain mineral cylinder oil as a softening ingredient.

13. *Anti-rust Greases* are similar to ball-bearing greases, and are usually of the type C, composed of neutral, refined petroleum grease or jelly, with which a thick mineral oil may be mixed.

14. *Launching Greases*, for lubricating the launching ways in shipyards, are tallow substitutes, composed of mixed fats and possibly some soap.

15. *Wire Rope Greases*, used for the lubrication and preservation of colliery and other winding ropes, are generally low-priced greases of types B or C, but must be quite neutral and free from any substance likely to corrode or damage the wire. They frequently contain residuum of a pitchy nature (mineral oil residuum, wool pitch, stearine pitch), to cause the grease to cling to the rope or cable and not to be thrown off by the movement of the rope.

16. *Cold-neck Greases* may be block greases of type A (4) or black rosin greases made with black, heavy viscosity mineral oils. Many varieties of grease are used for this purpose.

17. *Hot-neck Greases.*—These greases are frequently made from still residues, such as stearine pitch, wool pitch, mineral pitch from the distillation of American crude petroleum, Russian mineral pitch or goudron, either alone or mixed with heavy mineral lubricating oils, and thickened with rosin grease, soap, etc. Coal-tar pitch and Trinidad pitch are also used. Some of the best hot-neck greases are composed of heavy mineral lubricating oils thickened with soap. A good quality lubricating graphite, as free as possible from mineral impurity, may with advantage be, but is not usually, added. Modern manufacturers now offer this type of lubricant in the form of solid blocks, cut into bars of a size to fit the housing, thereby simplifying considerably the application of the lubricant.

Railway Wagon Axle Grease.—The grease used in railway wagon axle-boxes in this country is an emulsified mixture of oil, fat, soap, and water. The fats and oils generally used are tallow, palm oil, and mineral oil. One railway company adds a proportion of rape oil. The soap is generally made during the manufacture of the grease, by adding sufficient caustic soda liquor to saponify a proportion of the fat, but sometimes it is introduced as a ready-made soap. Old grease, recovered from the axle-boxes of wagons which have come in for repairs, is usually refined and incorporated with the new grease. Oil recovered from sponge cloths and waste, also recovered axle oil, are used by some companies. One company uses a proportion of Yorkshire grease, but the general experience is that wool fat is not a desirable constituent in this kind of grease. The procedure adopted in making the grease and in the refining of the old grease varies, but the following three examples will sufficiently illustrate the different methods employed.

METHOD 1. The distinguishing feature of this process is the conversion in the first operation of the fat from the old grease into soap, the product being run, while still hot and liquid, into the grease mixing-pans. Twelve cwts. of old grease are boiled with a dilute solution of caustic soda in a steam-jacketed pan of about three tons' capacity; the copper and iron soaps resulting from chemical action on the bearings and journals are thereby decomposed, and the resultant cupric and ferric hydroxides, together with miscellaneous dirt and sand, fall out of the solution. On standing overnight, a clean solution of soap (with mineral oil and a little unsaponified glycerides held in an emulsified condition) is obtained, with the impurities at the bottom. The supernatant warm and liquid soap solution is run off into the grease-making pans and is there mixed with sufficient tallow, palm oil, mineral oil, and caustic soda to make 84 cwts. of finished grease, the ingredients being boiled together and allowed to set, with occasional stirring, in the pans in which the grease is made. The proportions used are as follows:—

Tallow,	17·0
Palm oil,	7·2
Mineral oil, partly recovered from old grease,	16·7
Fat represented in old grease,	6·4
Caustic soda,	2·0
Water,	50·7
	100·0

METHOD 2. The grease is made from the following ingredients:—

Tallow,	21·3
Palm oil,	10·2
Mineral oil,	9·0
Fatty and oily matter from recovered grease,	10·2
* Caustic soda,	2·4
Water,	46·9
	100·0

* Added as caustic soda liquor of 90° Twaddell.

The water is heated in a steam-jacketed mixing-pan, the palm oil and about half of the tallow (previously melted together) are added, and then the mineral oil. The fatty matter recovered from old grease is next added, then the caustic soda liquor, and the whole is boiled for half to three-quarters of an hour, when the remainder of the tallow is added. After well stirring for about a quarter of an hour, the mixture is run off into the cooling-pans and allowed to set with occasional stirring.

The old, dirty, grease is boiled with water and decomposed with excess of dilute sulphuric acid; and after rejection of a frothy scum and removal of the dirt and water which have settled to the bottom, the fatty acids and oil remaining are added to the new grease as above stated.

METHOD 3. Standard proportions are:

Tallow,	24·4
Mineral oil (dark machinery oil and recovered axle oil),	8·4
Palm soap (63 per cent. fatty and resin acids),	24·4
Water,	42·8
	100·0

The soap is shredded and dissolved in the water in a steam-heated pan, the tallow and mineral oil are melted together in another pan and are then run into the hot soap solution. A proportion of old grease from axle-boxes, remelted with a sufficiency of water and strained through fine wire gauze, is then added, the mixture is well stirred and run into cooling-pans to set, being stirred at intervals during the cooling.

Analyses of the three greases, calculated from the above formulæ, are set out below:

	1.	2.	3.
Saponifiable fat,	16·5	24·0	24·4
Mineral oil,	16·7	11·0	8·4
Soap (anhydrous),	15·2	15·0	17·1
Water,	51·6	50·0	50·1
	100·0	100·0	100·0

The authors are indebted to Mr. H. Gripper, late chief chemist of the Great Central Railway, and Mr. J. H. B. Jenkins, chief chemist of the London and North-Eastern Railway, for the particulars relating to Nos. 1 and 2 greases. The No. 3 grease is made by the London, Midland and Scottish Railway.

The Great Western Railway Co. use a grease containing much more mineral oil and less water than the above, the ingredients used being:

	Winter.	Summer.
Tallow,	13·2	13·2
Palm oil,	1·7	1·7
Petroleum residuum,	19·9	26·5
Cleaned axle oil,	16·5	9·9
Palm soap,	23·1	23·1
Alkali,	0·8	0·8
Water,	24·8	24·8
	100·0	100·0

Assuming the alkali to be caustic soda and wholly combined as soap, these ingredients will give a grease containing, approximately:

Saponifiable fat,	9·4
Mineral oil,	36·4
Soap (anhydrous),	22·5
Water,	31·7
	100·0

Mr. W. R. Bird, late chief chemist of the Great Western Railway, kindly supplied these particulars.

The wagon grease formerly used by the London, Brighton and South Coast Railway was exceptional, in that it contained a solid lubricant (talc), the composition being:

Saponifiable fat,	15·0
Mineral oil,	20·0
Soap (anhydrous),	10·0
Talc,	15·0
Water,	40·0
	100·0

Mr. F. P. Matthewman, late chief chemist of the railway, to whom the authors are indebted for the above information, states that the grease gave every satisfaction in use. In one consignment, however, chalk was inadvertently substituted for the talc and unsatisfactory results were obtained.

A good railway wagon grease, when tested in the manner described on p. 270, should melt as a whole at a temperature above 100° F., but not higher than 140° F., without separation of its constituents. Cup greases, which melt at higher temperatures, and greases from which the oil separates on melting and leaves the soap unmelted, are unsuitable for railway wagon axles.

A lime-soap-thickened mineral oil grease offered for railway wagon axles was composed of:

Mineral oil (0·880),	78·60
Unsaponified fat,	1·29
Lime soap,	18·30
Water,	0·93
Undetermined and loss,	0·88
	100·00

This grease melted without any separation at about 231° F. and was reported to be unsuitable for the purpose.

Wagon grease is sometimes adulterated with china clay. A sample examined by one of the authors contained:

Fatty matter and soap,	20·8
China clay,	19·3
Water,	59·9
	100·0

Besides being a poor lubricant, this grease caused trouble through the china clay accumulating in the boxes.

A very inferior grease made by thickening tar oil with soap, and loaded with mineral matter, was obtained from a railway wagon belonging to a provincial gas company. When heated to about 173° F. the oil commenced to run down and leave the soap. The grease was found to be composed of.

Tar oil (sp. gr. 1·05),	39·5
Fatty oil or fat,	5·0
Fatty acids, free and as soap,	10·2
Water lost at 212° F.,	15·9
Mineral matter, by diff., chiefly gypsum and china clay,	29·4
	100·0

A soap-thickened grease, in the manufacture of which wool fat had been used, contained:

Mineral oil (0·901),	78·6
Neutral fat,	10·4
Soap, anhydrous,	8·6
Water,	2·4
	100·0

This grease, when tested on Thurston's machine on a steel journal with bronze bearings. under a load of about 195 lbs. per square inch of bearing surface, and at a speed of rubbing equal to about 7 feet per minute, gave much less friction at 70° F. than the Midland Railway axle-grease described on p. 177, but no quantitative figures were obtained. The grease, however, had a higher melting-point than the Midland Railway grease, and when some of it was heated on wire gauze in an oven at 140° F. the mineral oil slowly filtered through and left the soap on the gauze. Such a grease would be likely to cause trouble in the lubrication of railway wagon axles, through not feeding uniformly on to the journal; it would be more suitable for use in a lubricator of the "Stauffer" type.

During the late War, when all available animal and vegetable fats and oils were required for the manufacture of glycerine, large quantities of railway wagon grease were made without tallow or other glyceride, the components being mineral oil, fatty acids, caustic soda in sufficient quantity to neutralise and form soap with the fatty acids, and water. Greases made from these ingredients enabled the railway companies to lubricate their wagons during the period of emergency, but their lubricating value was inferior to that of greases made with glycerides in the usual way, and after the termination of the War their use was not continued. Longer trial might have led to a satisfactory grease being made without glyceride, but the experiments were brought to a close before the possibilities had been fully explored. Under favourable conditions, the consumption of a good railway wagon grease is less than one ounce per axle-box per 100 train miles, but in practice the consumption frequently amounts to several ounces.

Railway Clearing-House Standard Specification for Axle-Box Grease.[1]

The following specification, issued in January 1926, supersedes the specification dated May 1914:—

"The grease to be an emulsified mixture of water, soda soap, neutral tallow

---

[1] Copies can be obtained from the Secretary of the Railway Clearing-House, 123 Seymour Street, London, N.W.1, price 3d. per copy post free.

or other suitable fat, with or without mineral oil. It must be free from resin or tar oil, also from lime, gypsum, or other mineral matter, and must contain not more than 50 per cent. of water. The grease must be of uniform consistency, and when placed in a cup made of wire gauze (having 20 meshes to the linear inch) and put in an oven at 100° F. for an hour, and afterwards slowly raised in temperature at the rate of about 10° per hour, must melt and run through the gauze completely, without separation of its constituents, between the temperatures of 100° and 110° F. Greases of the following composition have proved satisfactory in use:–

	Per cent.
Tallow or other suitable fat,	15-25
Mineral oil,	Not more than 20
Dry soda soap,	15-25
Water,	Not more than 50."

II.—SOLID LUBRICANTS.

A few minerals—mica, talc, soapstone, and graphite—act as natural lubricants. Langmuir[1] found that the surface of freshly split mica (biotite) was as slippery as a glass surface lubricated with a film of oil, a glass or platinum slider slipping at the same angle on both.

Graphite is by far the most important of solid lubricants. Natural graphite is found in many parts of the world, both in the flake form and also amorphous, but the kind usually employed as a lubricant is the flake graphite. Amorphous graphite is also made in the electric furnace, and by methods which have been described by Dr. Acheson[2] is obtained by him in a colloidal form and sold, mixed with water, under the name of "Aquadag" or, mixed with oil, as "Oildag." The principal advantage of colloidal graphite is that it will remain suspended in water or oil for an indefinite period, provided the fluid medium remains neutral in reaction; natural graphite, and also artificial graphite which is not in the colloidal state, rapidly settles out and cannot, therefore, be used in admixture with oil unless the mixture is continually stirred.

Acheson (Artificial) Graphite, Grade No. 1340, gave the following results:—

Moisture,	0·07
Further loss on heating to faint redness in covered crucible,	0·23
*Mineral matter (ash),	0·66
Graphite (by difference),	99·04
	100·00
******Composition*:**	
Silica,	0·07
Alumina,	0·31
Ferric oxide,	0·25
Lime, etc. (by difference),	0·03
	0·66

Some analyses of natural lubricating graphites, made by L. Archbutt for

---

[1] *Faraday Soc. Transactions*, xv. (1920), p. 69.

[2] *Jour Soc. Chem. Ind.*, xxix. (1910), pp. 246–248.

the Lubrication Committee of the Department of Scientific and Industrial Research,[1] are set out in Table LVIII.

TABLE LVIII.—ANALYSES OF NATURAL LUBRICATING GRAPHITES, MANUFACTURED BY THE GRAPHITE PRODUCTS, LTD., BATTERSEA.

Description.	Foliac Flake Graphite No. 100.	Foliac Flake Graphite B. 1371.	Foliac Flake Graphite No. 2	Foliac Flake Graphite No. 1.	Foliac Flake Graphite No. 101.
Moisture, . . .	1·26	0·32	0·20	0·29	0·05
Further loss on heating to faint redness in closely covered crucible, .	0·09	0·49	0·42	0·44	0·34
*Mineral matter (ash), .	0·37	4·79	1·93	9·87	0·05
Graphite (by diff.), . .	98·28	94·40	97·45	89·40	99·56
	100·00	100·00	100·00	100·00	100·00
**Composition* :					
Silica, .	Mainly ferric oxide	3·00	1·06	4·84	
Alumina, . .		0·67	0·33	3·32	
Ferric oxide, . .		0·86	0·46	1·55	
Lime, etc. (by diff.),		0·26	0·08	0·16	
		4·79	1·93	9·87	

An analysis of "**Aquadag**" gave the results shown below. The sample smelled of ammonia, and after acidifying with dilute hydrochloric acid to precipitate the graphite, filtering this off, thoroughly washing until free from chlorides, and drying, there was obtained :

Insoluble matter, ...	15·06
Water and soluble extract, ...	84·94
	100·00

The insoluble matter contained :

Graphite (by difference), ...	89·68
*Mineral matter (ash),.	1·20
Loss on heating to faint redness in covered crucible, ...	9·12
	100·00

**Composition* :

Silica, ...	0·24
Alumina, . .	0·18
Ferric oxide,	0·65
Lime, etc., ...	0·13
	1·20

"**Oildag**" gave the following results :—

Graphite, etc., insoluble in ether, ...	11·2
Ether extract (oil), ...	88·8
	100·0

---

[1] Abstracted by permission of the Controller of H.M. Stationery Office from the *Memorandum on Solid Lubricants* (1920), published by the Department.

It was found impossible to completely free the graphite from oil by washing with ether, and an analysis of the "graphite" as extracted gave:

Graphite (by difference),	90·74
*Mineral matter (ash),	2·25
Loss on heating to faint redness in covered crucible	7·01
	100·00

*Composition :	
Silica,	0·21
Alumina,	0·35
Ferric oxide,	1·02
Lime, etc.,	0·67
	2·25

For convenience of comparison, all the above analyses have been recalculated on the moisture-free and volatile matter-free samples, and the results are given in Table LIX.

TABLE LIX.

	"Foliac" Flake Graphite.					Acheson Graphite.		
	No. 101.	No. 100.	No. 2.	B. 1371.	No. 1.	No. 1340.	From "Aquadag."	From "Oildag."
Graphite,	99·95	99·62	98 06	95·17	90·06	99·34	98·68	97·58
Mineral matter (ash),	0·05	0·38	1·94	4·83	9·94	0·66	1·32	2·42

The "Foliac Special Large Flake Graphite No. 101" is almost chemically pure. The flakes have a pure silvery lustre when reflecting light; when not reflecting they appear absolutely black. A little of the Graphite lying at the bottom of a deep narrow trough of white paper looks black and white, as if it were a mixture of two substances.

The "Foliac No. 100" is apparently the same Graphite as No. 101, ground very fine, and it contains more impurity, chiefly iron from the mill.

The "Acheson Graphite No. 1340," though of great purity, is less pure than the natural graphite, and it is of interest to note that the conversion of this into "Aquadag" has introduced more impurity, and the further conversion of this into "Oildag" still more. In all the Acheson Graphites the principal impurities are iron and alumina. In the "Foliac" Graphites, silica is the chief impurity.

The adsorbed films found on the particles of graphite obtained from "Aquadag" and "Oildag" may be of importance. This adsorbed matter appeared to be non-oily vegetable matter in the case of "Aquadag," and oil, or some constituent of the oil, in the case of "Oildag."

In the lubrication of machinery, solid lubricants are used either dry, mixed with grease, or mixed with oil. Dry graphite is used as a lubricant on certain parts of lace-making machinery, to avoid staining the fabric with oil, also in chocolate-making machinery, to avoid getting oil into the chocolate. The speeds of such machines are low and the pressures light.

There are also instances where machines have to work at very high temperatures (bottle-making), in which only a non-combustible lubricant can be used. Another instance occurs in the production of tungsten wire filaments for electric lamps by hot-drawing through diamond dies. Here "Aquadag" is used as a lubricant. The wire is passed through the "Aquadag" paste and then through a gas flame, which heats the wire to the required temperature and bakes on it a coating of the lubricant. In all these cases, the solid lubricant is used to avoid troubles arising from the use of oil.

According to C. F. Mabery,[1] colloidal graphite surpasses ordinary graphite in unctuous quality, and its property of remaining suspended in water and oils renders it specially convenient for lubrication. The readiness with which it forms coherent films on journals and other friction surfaces is a valuable feature. Though refusing to flocculate and settle in ordinary water or in purified mineral oil, it readily does so in presence of an electrolyte; the presence of free acid, therefore, or of any other substance capable of acting as an electrolyte in water or oil to which the graphite is to be added, must be guarded against.

In Mabery's paper the results are given of experiments with colloidal Acheson graphite suspended in the proportion of 0·35 per cent. in water, petroleum burning oil ("kerosene"), mineral fuel oil, spindle oil, "Galena" oil and cylinder oil, the machine used, designed by Prof. Carpenter, of Cornell University, having a test-bearing of approximately 8 square inches projected area, with journal about 3 inches in circumference. The load was applied by means of a spring worked by cam and lever, and a long lever arm with vernier attachment and sliding weight recorded the friction. A cast-iron bearing, white-metalled with an alloy containing tin 90 per cent., antimony 8 per cent., and copper 2 per cent., and carefully machined to a true surface, was used, and the lubricant was supplied in drops from a sight-feed lubricator through a small hole close to one side of the bearing and two grooves cut diagonally across the white metal face from the inlet hole. With this machine there must have been a large amount of solid friction, and the value of graphite in the lubricant would, therefore, be enhanced. Thus, aquadag and water was found a good lubricant under a load of 70 lbs. per square inch. In a test continued for 15 hours at a speed of about 400 feet per minute, the coefficient of friction remained steadily at about 0·01, and was not altered by stopping and restarting the machine. Tests made with oildag in petroleum burning oil, fuel oil, and cylinder oil gave similar results, though the coefficient was higher with the cylinder oil, owing to the much greater viscosity of the latter.

In a further series of tests with oildag in kerosene, fuel oil, and spindle oil, at the same speed as before, but under a pressure of 150 lbs. per square inch, it was found that the coefficient was less than 0·01 with the kerosene, about 0·01 with the fuel oil, and about 0·015 with the spindle oil. An interesting fact noted was that the friction with the kerosene immediately rose when the supply of lubricant was shut off, whilst with the other oils no increase took place until some time after. It is concluded that the kerosene has not the power possessed by the other oils of causing the graphite to form an adherent film on the friction surfaces. It was further observed that the spindle oil, fed at the rate of 4 drops per minute, gave a lower coefficient of friction when containing oildag than the same oil fed at double the rate without oildag. At 6 drops per minute, the spindle oil without graphite failed to maintain a continuous film, and the friction rose rapidly. In all the tests made with colloidal graphite suspended in the lubricant, it was found that the temperature of the bearing rose to a certain point and then remained practically stationary

---

[1] *Jour. Amer. Soc. Mech. Eng.*, 1910, pp. 163–180.

until the supply of lubricant was shut off, the liquids of lowest viscosity giving the lowest temperatures. Water and graphite gave the lowest temperatures of all, only about 5 degrees above the room temperature. In all the tests made with graphite suspended in the lubricant, the bearing continued to run cool and with little increase of frictional resistance for an hour or two after the oil supply was shut off, owing to the excellent surface produced by the graphite film. Other noteworthy features were the small amount of graphite required and the efficacy of the latter in reducing wear.

In a later paper,[1] Mabery gives results of further tests with the Carpenter machine, showing the effect of adding oildag to one of the best automobile lubricants. The addition of oildag to the oil lowered the friction and running temperature and formed what the author terms a "graphoid" surface on the bearings, which enabled the machine to run for many hours (in one test nearly 10 hours) after the supply of lubricant was shut off ("endurance test") without material increase in the friction, whilst with the plain, ungraphited oil the oil-film broke and the bearings seized 17 minutes after the oil supply ceased The pressure in these tests was 200 lbs. per square inch, and speed 450 r.p.m. It was further found that when once the "graphoid" surface had become fully formed, the same lubricating effect was obtained by the use of one-sixteenth of the quantity of oil required in the absence of graphite.

A number of tests were made for the Lubrication Committee[2] with the Lanchester worm-gear testing machine, "Oildag" being used in one series of tests and "Foliac No. 100" natural graphite in the other. The results showed that in both series of tests graphite had a beneficial effect with some oils, but not with others. With some oils flake graphite gave the best results, and with others colloidal graphite. The most marked effect, an increased efficiency of 1·25 per cent., was obtained by adding "Foliac" graphite to an animal (trotter) oil. "Oildag" added to the same oil had scarcely any effect. Bayonne (mineral) oil was improved almost equally by "Foliac" graphite and by "Oildag"; Mobiloil A—another mineral oil - was not much affected by either. Castor oil was a little improved by "Oildag" and not improved by "Foliac." In the case of the mineral oils, the graphite generally had the effect of raising the temperature at which unsteady running and a falling off of efficiency of the gear took place. The results on the whole showed that it is worth while to add graphite to a gear oil, and best to add it in the colloidal form, because, although flake graphite may give a higher efficiency, it does not remain suspended in the oil unless continually stirred, and it causes greater wear of the lubricated surfaces.

The following results were obtained by the authors on a Thurston machine, when comparing the friction of 900/7 mineral oil with the same oil mixed with sufficient "Oildag" to give 0·35 per cent. of "graphite" in the mixture, *i.e.* graphite including the adsorbed film of oily matter. Some tests made on a steel journal with bronze bearings at a speed of about 223 feet per minute, measured at the surface of the journal, and a load per square inch of 271 lbs. showed a very small average decrease in the friction due to the use of "Oildag," the lowest coefficient obtained in any single test being 0·0024 with "Oildag" and 0·0028 without it. The temperature reached by the bearings after four hours' running was a few degrees lower when "Oildag" was used. In tests made at this speed we are dealing, of course, with liquid film lubrication, and the small difference in the friction must be attributed to a small amount of contact friction between the solid surfaces, which was reduced by the graphite in the oil.

---

[1] *Jour. Ind. and Eng. Chem.*, v. (1913), pp. 717–723.

[2] *Report of the Lubrication and Lubricants Inquiry Committee* (1920).

In the course of these experiments, some tests were made to ascertain how long the bearings would run without seizing after the oil supply was cut off. In each of three tests without "Oildag," incipient seizing occurred after about 8 minutes. In one test with "Oildag," seizure occurred after 18 minutes, but in a second test the bearings seized in 1½ minutes. The authors were unable to confirm Mabery's results in this respect.

After completing the above tests, further tests were made at a speed of 7 feet per minute. The results again showed a lower friction with "Oildag," especially under the highest pressures. The bearings were then changed to white metal, and the relative consumption of oil measured, with and without "Oildag," the method being to reduce the oil supply to the minimum necessary to maintain a steady pendulum deflection for a period of several hours. Tests were made at 7 feet per minute and at ten times that speed, and showed a slightly lower consumption of oil when "Oildag" was used. The actual figures were:

Speed, . . .	7 feet per minute.		70 feet per minute.	
Load, per square inch,	358 lbs.		385 lbs.	
Oil consumption, .	c.c. per hour.		c.c. per hour.	
	Oil alone.	Oil + Oildag.	Oil alone.	Oil + Oildag.
9 tests (average) .	0·25	..	..	..
18 " " .	..	0·21	..	..
2 " " .	..	..	0·83	0·81

Graphite, of course, is likely to show the most marked effects at very low speeds, and further tests were made with bronze bearings at a speed of 2 feet per minute. At this speed it was found that the greatest load the bearings would carry safely when lubricated with 900/7 mineral oil was 227 lbs. per square inch. The average deflection of the pendulum was 0·4 degree. The addition of "Oildag" to the lubricant reduced this to 0·2 degree.

The Lubrication Inquiry Committee made extensive inquiries from users of solid lubricants and published the information obtained in the *Memorandum on Solid Lubricants*, issued in 1920. On heavily loaded bearings, and whenever the conditions are liable to cause heating, solid lubricants added to the oil have been found useful, also in cases where lubrication is apt to be neglected.

Oildag has been found specially valuable for automobile lubrication. Dr. Acheson, with a Panhard four-cylinder car, found that 0·35 per cent. of colloidal graphite added to the cylinder oil reduced the consumption of oil from 1 gallon per 200 miles to 1 gallon per 750 miles. The graphite film formed on the piston rings and inside surface of the cylinders is said to produce such a perfect fit that the compression is increased. No oil is carried into the exhaust, and there is no smoking. Should the supply of lubricating oil fail from any cause, the bearings will run much longer if they have the film of graphite upon them. Similar beneficial results follow from the use of oildag in the lubrication of gas engines. Prof. Burstall reports having obtained very good results with oildag on a 20-H.P. Crossley gas engine at Birmingham

University, which works on either suction gas or Mond gas. No trouble had been experienced from hot bearings, there was not the least sign of deposit on the cylinder, and the measurements frequently taken on this engine for determining mechanical efficiency showed the friction to be very low. The oil consumption also could be kept very low.

In a letter published in *Engineering*, 18th February 1921, Dr. Acheson lays stress on the fact that time is required for the full effects of oildag to show themselves. He considers that the graphite particles in the oil are gradually adsorbed by the surface, and points out that when first commencing to use oildag the formation of the film is assisted by cleaning the surfaces and rubbing them over with a strong solution of oildag in oil. The importance of using only pure *neutral* mineral oils is also pointed out. Many mineral lubricating oils are refined by treatment with acid and alkali, and traces of these remain in the oil and cause flocculation of the graphite.

Some experiments made by one of the authors have proved that colloidal graphite will pass over with lubricating oil through worsted trimmings. Mixtures were made by adding 2 oz. of oildag to 1 gallon of (A) red engine (mineral) oil, (B) red engine oil blended with 15 per cent. of rape oil. The following results were obtained:—

	(A.) Per cent.	(B.) Per cent.
Graphite in mixture as prepared, . . .	0·176	0·172
„ in oil collected after 1 hour's siphoning,	0·162	0·181
„ in oil collected after further 4–5 hours' siphoning through same trimmings,	0·163	0·171

One of the most interesting instances of the successful use of graphite in steam cylinder and valve lubrication was given by E. W. Johnston in a paper read before the Birmingham Association of Mechanical Engineers in 1916. Oil carried forward in the exhaust steam from cylinders lubricated with oil is frequently the cause of a great deal of trouble when such steam is required for heating or drying, for washing or cooking, or when the condensed water is passed back into the boilers. Oil separators, such as Princeps', will remove the greater part of the oil from the steam if a pure mineral oil is used for lubrication, and chemical or electrolytic separators are very efficient in removing oil from condensed water, but none of these appliances effects complete removal of the oil, their cost is considerable, and their efficiency is dependent upon the care used in working them. If, therefore, cylinders and valves can be efficiently lubricated without the use of oil, all this trouble and expense is avoided. This Mr. Johnston claims to have done on a plant including three 50 kw. high-speed vertical steam dynamos, two deep bore-hole pumping engines, and other small pumps working with saturated steam at 120 lb. pressure. A special form of lubricator was first devised,[1] having the sight feed-glass filled with petroleum, through which the drops of " aquadag " were arranged to fall, and which worked quite successfully. Having obtained satisfactory results for a period, one of the high-speed engines, after accurate gauging of the valves and cylinders, was put on a six months' running test. At the end of this period, the greatest wear at any point was found not to exceed 0·001 inch. The walls of the cylinders and the surfaces of the piston rings had a mirror-like appearance. A set of indicator cards taken on full load, compared

---

[1] This lubricator can be obtained from Messrs. Dewrance.

with those taken by the makers during the official test when the engines were new, showed a difference of only 0·6 per cent. after two years' working on "aquadag" lubrication. Micrographs taken from the surface of a piston ring showed that the graphite had filled up the pores of the cast iron and produced a smooth surface. There was no evidence that it had penetrated into the iron, except in one small place. In a private communication to one of the authors, Mr. Johnston states that "aquadag" has all along been, and is now being used on horizontal engines and with heavy "D" slides with satisfactory results. When reading his paper in 1916 he exhibited a slide valve from a Worthington type feed-pump, the surface of which was perfect, although, as he stated, it had been working for 2½ years at 120 lbs. pressure. He further pointed out as worthy of note that being in duplicate each pump stood a week about, and yet there was not the slightest deterioration of the surfaces from rusting.

CHAPTER VII.

PHYSICAL PROPERTIES AND METHODS OF EXAMINATION OF LUBRICANTS.

A.—VISCOSITY AND VISCOMETRY.

THE nature of viscosity and viscous flow having been discussed in Chapter IV., the methods of measuring the viscosities of oils and other liquids—viscometry—have now to be considered. Various methods have been proposed, which may be grouped under three heads, viz.:—

1. Oscillation or rotation of a cylinder or disc immersed in the liquid (Coulomb,[1] Couette,[2] Doolittle,[3] Stormer,[4] Macmichael [5]).
2. Flow of the liquid through a capillary tube (Poiseuille).[6]
3. Motion of a sphere falling vertically through the liquid (Stokes,[7] Ladenburg,[8] Sheppard,[9] Gibson and Jacobs [10]), or rolling down an inclined tube filled with the liquid (Flowers).[11]

The most generally employed method for exact work is that of Poiseuille, in which the rate of flow of the liquid through a capillary tube of known dimensions under known conditions of temperature and pressure is measured. We shall describe this method, for although it has not come into general use for commercial purposes, it has occasionally been thus employed, and we have used it for determining the viscosities of mixtures of glycerol and water from which the table on pp. 197-199 was constructed.

Absolute Viscometry.

Determination of Viscosity in Absolute Measure.[12]—Poiseuille's method of viscometry depends upon the following facts, which he proved experimentally: (1) that the rate of flow of liquid through a capillary tube of suitable dimensions is proportional to the pressure and inversely proportional to the length of the tube; and (2) that the rate of flow through a capillary tube of cylindrical bore is proportional to the fourth power of the radius of the bore. Osborne Reynolds has shown [13] that to ensure these conditions of steady

---

[1] *Mém. Instit. Nat. Sci. et Arts*, 1800, **111**, 246.

[2] *Ann. chim. phys.*, **21** (1890), 433.

[3] *Jour. Amer. Chem. Soc.*, **15** (1893), 173, 454.

[4] *Jour. Ind. and Eng. Chem.*, **1** (1909), 317.

[5] *Jour. Ind. and Eng. Chem.*, **7** (1915), 961; **12** (1920), 282.

[6] *Comptes Rendus*, **15** (1842), 1167; *Mémoires de l'institut savants étrangers*, **9** (1846), 433.

[7] See Lamb, *Hydrodynamics*, p. 587.

[8] *Ann. Physik*, **22** (1907), 287.

[9] *J. Ind. and Eng. Chem.*, **9** (1917), 523.

[10] *Jour. Chem. Soc.*, cxvii. (1920), 473.

[11] *Proc. Amer. Soc. Test. Mat.*, **14** (1914), 568.

[12] See p. 75.

[13] See p. 83.

viscous flow the proportions of the tube must be such that $\frac{r_0\bar{v}d}{\eta}$ is less than 700, where r_0 is the radius of the bore, $\bar{v}$ the mean velocity of the fluid, d the density of the fluid, and η its viscosity. The viscosity of the fluid in absolute measure (*poises*) is then given, approximately, by Poiseuille's formula—

$$\eta=\frac{\pi gdhr_0^4t}{8Vl},$$

in which g is the acceleration due to gravity, d the density of the fluid, h the head, t the time, V the volume of liquid discharged, and l the length of the tube.

To obtain the true viscosity, corrections must be made: (α) for the kinetic energy of efflux; (β) for the abnormal conditions of flow inside the inlet end of the tube; (γ) for the viscous resistance to the flow of the liquid outside the ends of the tube; and (δ) for the resistance due to surface tension effects at the discharge orifice. The correction for kinetic energy is made by deducting from the right-hand member of the equation the quantity $\frac{mVd}{8\pi lt}$, which, if the value of the coefficient m be taken as unity, is known as the Couette-Finkener-Wilberforce correction. Boussinesq,[1] however, has shown mathematically that in order to allow for correction β, which has never been satisfactorily determined experimentally, the coefficient m in the kinetic energy term should be increased to 1·12, and this value is now generally accepted. Correction γ, which is known as the Couette value, has been determined experimentally by several observers, but the results obtained are too discordant to be of any use at present. The latest measurements by Herschel[2] show that, broadly speaking, it is in the neighbourhood of 0·25d, where d is the diameter of the bore of the capillary. This correction, when made, is added on to the length l of the capillary, making the effective length $l+0{\cdot}25d$ and slightly reducing the value of η obtained without the correction. We have not used the correction in the subsequent calculations, owing to the uncertainty which exists as to its magnitude. Errors due to β and γ may be reduced to very small dimensions by making the capillary tube long.

The error due to surface tension effects, which may be serious, is so variable that the correction δ is best eliminated altogether by immersing the discharge orifice in the liquid and making a suitable deduction from the head. The revised Poiseuille equation thus becomes:

$$\eta=\frac{\pi gdhr_0^4t}{8Vl}-\frac{1{\cdot}12Vd}{8\pi lt}. \quad . \quad . \quad . \quad . \quad . \quad (1)$$

This equation, however, ceases to be true when the head h is not constant. In the absolute viscometer described below, as indeed in practically all others, the head falls from an initial value h_1 to a final value h_2, and it is not accurate to use the mean head $\frac{1}{2}(h_1+h_2)$ if the difference h_1-h_2 is at all large as compared with the mean head $\frac{1}{2}(h_1+h_2)$. The error introduced by so doing has been calculated for various head differences and summarised in tabular form by Lidstone.[3]

On the assumption of a uniform cross-section of the containers in which the heads are measured, the corrected value of h is given by $\frac{h_1-h_2}{\log_e h_1/h_2}$. This

---

[1] *Comptes Rendus*, **110 and 113.**

[2] *Proc. Amer. Soc. for Testing Materials*, **18 (2), 384.**

[3] *Phil. Mag.*, **xliii. (1921), p. 354.**

is known as the Meissner head, but even this is not strictly true, since it is derived on the assumption that all the work done by the liquid in flowing is used in overcoming viscous resistance, whereas, owing to the existence of the kinetic energy term, this is not the case. Dryden[1] has evolved an expression for the average head to be substituted for h in equation (1), if it is required to correct for these small inexactitudes, and Lidstone[2] has worked out the equation for η. For most practical purposes, however, it is sufficient to take the Meissner average head without further correction.

Description of an Absolute Viscometer.—The apparatus employed by the authors is illustrated in fig. 65. The capillary tube A was carefully selected and calibrated from end to end, and was found to be of practically uniform bore. Viewed through a lens magnifying 20 diameters, the bore appeared to be perfectly cylindrical in section. The diameter, calculated from the weight of mercury required to fill the tube, was 0·6180 mm., and the length of the tube, measured by a Whitworth machine, was 21·991 cm. Thus, the length was about 350 times the diameter, and, as we estimate from experiments made with Redwood's viscometer that the magnitude of the correction γ (see above) is about equal to the friction of a length of capillary tube equal to the diameter of the bore, our results from this cause cannot be more than about 0·28 per cent. too high. The kinetic energy correction, α, also became very small, owing to the narrowness of the bore, amounting to only 0·5 per cent. of the head in the case of water (viscosity=0·01 poise), and being quite negligible in the case of all the glycerol solutions except the thinnest (η=0·0379 poise), and in that making a difference of only 0 05 per cent., or 2 in the fifth decimal place.

The capillary tube was ground into the neck of the reservoir B, and was connected at its lower end, through the wide glass tube C, with the measuring tube D. The glass water-jacket E for maintaining the temperature constant contained a stirrer of brass wire H and a thermometer K, indicating tenths of a degree Centigrade. By drawing off a little water through the tube M, and adding either warmer or colder water through the funnel tube O, and vigorously stirring, the slightest alteration in the temperature of the bath could be corrected at once. This is a most important point, for the viscosity even of water undergoes a remarkably rapid alteration with change of temperature. Thus, the viscosity of water, which is about 0·013 poise at 10° C., falls to 0·010 poise at 20° C., or an average diminution of 2·3 per cent. per degree. The viscosity of oils, especially mineral oils, and of many other liquids, changes at a much greater rate. Bearing in mind the great importance of keeping the temperature of the liquid constant, the india-rubber disc P, closing the lower neck of the water-jacket, was made only about $\frac{3}{16}$ inch thick, and was pushed high up into the neck in order that the projecting end of the capillary tube below the water-line should be as short as possible and well screened from currents of cooler or warmer air. The tubes C and D, which were not part of the original design of the apparatus, were added in consequence of the erratic results obtained with water, owing to the varying tension of the free surface of the liquid (correction δ), when the end of the capillary tube was open to the air. D was drawn out to a point at the upper end, in order to prevent, or reduce to a minimum, evaporation of, or absorption of moisture from the air by the liquid in the tube. D was not jacketed; but, as all our experiments with this apparatus were made at 20° C., which was very nearly the temperature of the laboratory, any error due to the very slight difference in the temperature, and therefore in the density, of the fluid in D as compared

---

[1] *Amer. Bureau of Standards, Tech. Paper*, No. 210, p. 230.

[2] *Phil. Mag.*, xliv. (1922), p. 953.

with that in B, must have been quite negligible. The tube D was carefully calibrated, and the capacity in c.c. per millimetre, from the zero mark b' upwards, was accurately ascertained. The reservoir B was also calibrated, from the zero mark b downwards. The vertical distance between the two zero marks, measured by a cathetometer, was 25·38 cm. The shaded portions of the figure represent india-rubber connections.

Method of Experiment.—The tube C was first of all disconnected from tubes A and D, and each was thoroughly well washed with water, then rinsed with alcohol and ether, and dried by aspirating air through it. Having filled B, A, and C, and moistened the inner surface of D with the liquid to be tested, C was again fixed in position, taking care that no air bubbles were entrapped, and that the ends of the tube were pushed into close contact with the ends of A and D. The height of D was then adjusted in the clamp holding it, so that the zero mark b' was exactly level with a fixed mark on the capillary tube A. The upper end of the capillary tube was closed meanwhile by a valve made of a small cork fixed on the end of a platinum wire. The liquid was allowed to remain at rest until the temperature had settled down to exactly 20° C., and during this time the free surfaces of the liquid in B and D were accurately adjusted to the zero marks. All being ready, and the liquid perfectly motionless, the cork valve was raised and the liquid allowed to flow; the time was then measured which the meniscus in D took to rise between two points, the heights of which above b' were successively measured by a cathetometer. In experimenting with a thin liquid like water, the fluid rose in D with comparative rapidity, and after each experiment the valve was closed and the liquid readjusted to the zero marks; but with the glycerol solutions the rise took place so slowly that several successive observations could be taken without stopping the flow of liquid. The excess of tension of the meniscus in the narrow tube D over that of the wide tube B was ascertained separately

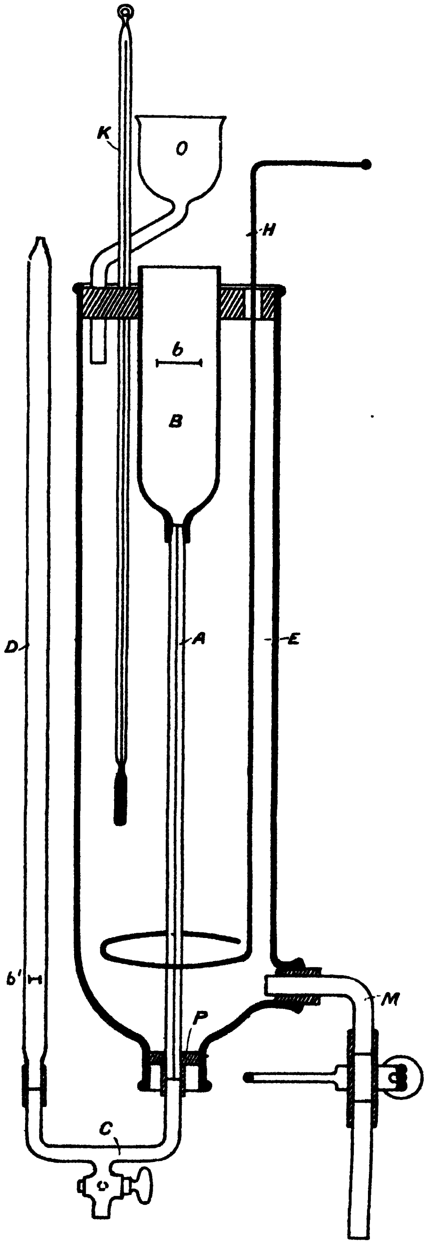

FIG. 65.

for each liquid by connecting D with a tube of the same diameter as B, without the intermediate capillary tube, and measuring with the cathetometer the difference in height of the liquid columns which balanced each other in the two tubes; this difference was added to the measured head.[1]

The apparatus, as shown in fig. 65, was found to give very good results with liquids whose viscosity did not exceed that of rape oil (about 1·17 poises at 60° F.). With more viscous fluids, the movement was so sluggish that it was found necessary to increase the pressure by lowering the tubes C and D and inserting a connecting tube between C and A. In these experiments the head was measured by the cathetometer on a millimetre scale suspended vertically by the side of the apparatus.

Experimental Determination of the Viscosity of Water at 20° *C.*—This determination was made to test the capabilities of the apparatus and method of working. The distilled water used was well boiled in a silvered flask to expel dissolved gases, cooled to 20° C., and immediately introduced into the viscometer.

t, the mean time of flow, was measured by a stop-watch, which was started and stopped as the meniscus in D passed two points, 2·155 cm. and 10·83 cm. respectively, above zero (b'). Five experiments were made, and the times recorded were 136·2, 136·3, 135·8, 135·9, and 135·8 seconds; hence the mean time was *136 seconds*.

V, the volume of water flowing through the capillary tube in t seconds, was the capacity of D between the two points above referred to, and amounted to *4·00756 c.c.*

h_1 and h_2, the initial and final heads, were calculated by subtracting from the vertical distance bb' the initial and final distances of the liquid surfaces below b and above b', one centimetre of the tube D being equal in capacity to 0·032 centimetre of B. The excess tension of meniscus in D, found to be 0·28 cm., was then added on to each, and the corrected head $\frac{h_1-h_2}{\log_e h_1/h_2}$, *i.e.* $\frac{(h_1-h_2)\log_{10} e}{\log_{10} h_1/h_2}$ was calculated.

Centimetres.

h_1 the initial head $=25·38-2·155-(2·155\times0·032)+0·28=23·14$

h_2 the final head $=25·38-10·83-(10·83\times0·032)+0·28=14·48$

Average head $=\frac{(h_1-h_2)\times0·43429}{\log_{10} h_1/h_2}$ (Meissner) . . $=18·602$

d, the density of water at $\frac{20°}{4°}$ C. . . . . . = 0·998259

r_0, the radius of the capillary tube . . . . . = 0·0309 cm.

l, the length of the capillary tube . . . . . = 21·991 cm.

g, the acceleration due to gravity[2] . . . . . = 981·31 cm. secs.

π, ... = 3·14159

---

[1] An alternative method of working was to fill the tube B with the liquid to be tested, and allow it to rise in the tube D until equilibrium was attained, the surface of liquid in B being about 1·4 cm. below the mark b. The height of the meniscus in D having been measured on a steel rule suspended by the side of the tube, the liquid was slowly drawn back into the tube B by suction through a glass tube passing through a rubber bung fitted into the upper end of B, until the meniscus was lowered below the zero mark in D, and after standing for a time, the liquid was allowed to rise again in D by gravity, and the time taken for the meniscus to rise from the zero mark to another mark on the tube was observed.

[2] Value at Derby.

Then, by the formula (Poiseuille, Meissner, Boussinesq):

$$\eta=\frac{\pi r_0^4 tgd(h_1-h_2)}{8Vl\log_e h_1/h_2}-\frac{1\cdot12\ Vd}{8\pi lt}=0\cdot010010 \text{ Poise.}$$

A more recent determination made with the same apparatus by the alternative method described in the footnote on p. 192, gave the value 0·010052, the generally accepted mean value being 0·01005.[1]

Viscosities at 20° C. of Mixtures of Glycerol and Water.—The glycerin used for most of these determinations was purchased as pure from Messrs. Hopkin & Williams in 1896. The specific gravity at $\frac{20^\circ}{20^\circ}$ C. was 1·2568, corresponding to about 97·1 per cent. of glycerol and 2·9 per cent. of water, according to Cocks' and Salway's table.[2] The viscosity of this was carefully determined, without dilution. It was then mixed with distilled water. Mixtures were prepared having a suitable range of viscosities, and the specific gravity and viscosity of each mixture were carefully determined. The data and results obtained are given in the following tables[3]:—

TABLE LX.—VISCOSITIES IN POISES OF MIXTURES OF GLYCEROL AND WATER.

GLYCERIN NO. 1.—Specific gravity at $\frac{20^\circ}{20^\circ}$, 1·10136

" " $\frac{20^\circ}{4^\circ}$, 1·09945

Glycerol=40 % (approx.).

Number of Experiment.	Volume (V) c.c.	Corrected Average Head (h) cm.	Time (t) Seconds.	Viscosity (η) Poises.
1	4·008	18·106	469·8	0·03723
2	5·009	16·729	634·7	0·03719

---

[1] Bingham and Jackson (*Bureau of Standards, Scientific Paper No.* 298 [1917], p. 74) give the following values for the viscosity of water in poises at 20° C. as determined by different observers:—

Poiseuille	0·010028 to 0·010087
Sprung	0·009978
Slotte	0·01007
Thorpe and Rodger . .	0·010005
Hosking	0·01005
Bingham and White . .	0·010054
Average	0·010046 Poise.

[2] *Journ. Soc. Chem. Ind.*, xli. (1922), p. 19T.

[3] Glycerin No. 1 has been substituted for that in the original tables. It was prepared in 1922 from Hehner's Chemically Pure Glycerin of 90 per cent. strength, which was put on the market in sealed bottles as a standard for use in glycerin analysis. The viscosity agrees, within the limits of error, with the figure in the original tables for glycerin of this specific gravity, after the necessary correction has been made in the average head. Glycerin No. 1*a* was also prepared from Hehner's pure glycerin.

TABLE LX.—*continued.*

GLYCERIN No. 1A.—Specific gravity at $\frac{20^\circ}{20^\circ}$, 1·1699

„ „ $\frac{20^\circ}{4^\circ}$, 1·1685

Glycerol=65·0 %.

Number of Experiment	Volume (V) c.c.	Corrected Average Head (h) cm.	Time (t) Seconds.	Viscosity (η) Poises.
1	2·007	20·32	813	0·1535
2	3·009	19·09	1293	0·1530
3	4·008	17·79	1847	0·1529
4	5·009	16·41	2498	0·1527

GLYCERIN No. 2.—Specific gravity at $\frac{20^\circ}{20^\circ}$, 1·1848

„ „ $\frac{20^\circ}{4^\circ}$, 1·1828

Glycerol=70·44 %.

Number of Experiment.	Volume (V) c.c.	Mean Head (h) cm.	Time (t) Seconds.	Viscosity (η) Poises.
1	0·9297	22·75	511·6	0·2364
2	0·9298	20·17	574·1	0·2351
3	0·9188	17·59	654·2	0·2365

GLYCERIN No. 3.—Specific gravity at $\frac{20^\circ}{20^\circ}$, 1·2057

„ „ $\frac{20^\circ}{4^\circ}$, 1·2037

Glycerol=78·11 %.

Number of Experiment.		Volume (V) c.c.	Mean Head (h) cm.	Time (t) Seconds.	Viscosity (η) Poises.
1st Series.	1	0·4647	23·47	518·2	0·5029
	2	0·4651	21·92	549·1	0·4972
	3	0·4652	20·37	579·4	0·4875
2nd Series.	4	0·6975	22·03	817·6	0·4962
	5	0·6973	19·97	905·3	0·4982
	6	0·6895	17·91	1014·2	0·5062

TABLE LX.—*continued.*

GLYCERIN No. 4.—Specific gravity at $\frac{20^\circ}{20^\circ}$, 1·2155

" " $\frac{20^\circ}{4^\circ}$, 1·2134

Glycerol = 81·74 %.

Number of Experiment.	Volume (V) c.c.	Mean Head (h) cm.	Time (t) Seconds.	Viscosity (η) Poises.
1	0·4644	24·61	729·3	0·7486
2	0·6971	23·22	1165·6	0·7520
3	0·6977	21·36	1262·5	0·7486

GLYCERIN No. 5.—Specific gravity at $\frac{20^\circ}{20^\circ}$, 1·2240

" " $\frac{20^\circ}{4^\circ}$, 1·2218

Glycerol = 84·89 %.

Number of Experiment.		Volume (V) c.c.	Mean Head (h) cm.	Time (t) Seconds.	Viscosity (η) Poises.
1st Series.	1	0·4645	24·12	1099·9	1·1142
	2	0·6973	22·62	1742·0	1·1024
2nd Series.	3	0·4649	22·26	1193·0	1·1144
	4	0·4652	21·02	1258·0	1·1089
	5	0·4646	19·77	1315·0	1·1166

GLYCERIN No. 6.—Specific gravity at $\frac{20^\circ}{20^\circ}$, 1·2463

" " $\frac{20^\circ}{4^\circ}$, 1·2441

Glycerol = 93·19 %.

Number of Experiment.	Volume (V) c.c.	Mean Head (h) cm.	Time (t) Seconds.	Viscosity (η) Poises.
1	0·4645	98·63	969	4·0861
2	0·4649	97·19	980	4·0687
3	0·4652	95·43	1001	4·0779
4	0·4640	93·99	1015	4·0832

TABLE LX.—*continued.*

GLYCERIN No. 7.—Specific gravity at $\frac{20^\circ}{20^\circ}$, 1·2568

" " $\frac{20^\circ}{4^\circ}$, 1·2546

Glycerol=97·12 %.

Number of Experiment.	Volume (V) c.c.	Mean Head (*h*) cm.	Time (*t*) Seconds.	Viscosity (η) Poises.
1	0·4644	99·25	2030	8·6884
2	0·4648	97·70	2051	8·6337
3	0·4650	96·46	2103	8·7366

COLLECTED RESULTS AND MEAN VALUES.

GLYCEROL AND WATER.—Viscosity at 20° C.

Sp. gr. at $\frac{20^\circ}{20^\circ}$.	1·1014	1·1699	1·1848	1·2057	1·2155	1·2240	1·2463	1·2568
" " $\frac{20^\circ}{4^\circ}$.	1·0995	1·1685	1·1828	1·2037	1·2134	1·2218	1·2441	1·2546
Glycerol, % .	40·0 (approx.)	65·0	70·44	78·11	81·74	84·89	93·19	97·12
Viscosity in Poises	0·03723	0·1535	0·2364	0·5029	0·7486	1·1142	4·0861	8·6884
	0·03719	0·1530	0·2351	0·4972	0·7520	1·1024	4·0687	8·6337
	..	0·1529	0·2365	0·4875	0·7486	1·1144	4·0779	8·7366
	..	0·1527	..	0·4962	..	1·1089	4·0832	..
	..	..	..	0·4982	..	1·1166	..	..
	..	..	..	0·5062	..	..	..	..
Mean values, .	0·03721	0·1530	0·2360	0·4980	0·7497	1·1113	4·0790	8·6862

The logarithms of the mean values of η in the above table of collected results were plotted upon a diagram as ordinates, and the specific gravities at $\frac{20^\circ}{20^\circ}$ as abscissæ. It was found that a very regular curve could be drawn through the eight points, confirming the general accuracy of the results. By means of this curve, the lengths of the ordinates corresponding to specific gravities ranging from 1·00 to 1·260 were carefully measured and gave the values of the corresponding logs. of η to three decimal places. On tabulating these logs. it was found that the increment was not quite regular, owing to the unavoidable irregularity of the curve as drawn. A systematic correction was, therefore, made which, while not altering the values of the logs. beyond the possible errors of experiment, made the increment a regular one. In Table LXI. the logs. have been omitted, the viscosities systematically corrected to agree with the new viscosity determinations, and a column of viscosity differences added. It is possible, therefore, to obtain from the table, without the use of logs., the viscosity of any glycerol solution, up to a specific gravity of 1·260, to the fourth decimal place, with sufficient accuracy for all practical purposes.

TABLE LXI.—VISCOSITIES IN POISES OF MIXTURES OF GLYCEROL AND WATER.

Specific Gravity at $\frac{20^\circ}{20^\circ}$ C.	Viscosity in Poises at 20° C.	Differences.	Specific Gravity at $\frac{20^\circ}{20^\circ}$ C.	Viscosity in Poises at 20° C.	Differences.
1·000	0·01005	12	1·047	0·01758	22
1·001	0·01017	12	1·048	0·01780	22
1·002	0·01029	12	1·049	0·01802	23
1·003	0·01041	12	1·050	0·01825	23
1·004	0·01053	12	1·051	0·01848	23
1·005	0·01065	13	1·052	0·01871	24
1·006	0·01078	13	1·053	0·01895	24
1·007	0·01091	13	1·054	0·01919	25
1·008	0·01104	13	1·055	0·01944	25
1·009	0·01117	13	1·056	0·01969	26
1·010	0·01130	13	1·057	0·01995	26
1·011	0·01143	13	1·058	0·02021	27
1·012	0·01156	13	1·059	0·02048	27
1·013	0·01169	14	1·060	0·02075	28
1·014	0·01183	14	1·061	0·02103	28
1·015	0·01197	14	1·062	0·02131	29
1·016	0·01211	14	1·063	0·02160	29
1·017	0·01225	14	1·064	0·02189	30
1·018	0·01239	14	1·065	0·02219	30
1·019	0·01253	15	1·066	0·02249	31
1·020	0·01268	15	1·067	0·02280	31
1·021	0·01283	15	1·068	0·02311	31
1·022	0·01298	15	1·069	0·02342	32
1·023	0·01313	16	1·070	0·02374	32
1·024	0·01329	16	1·071	0·02406	33
1·025	0·01345	16	1·072	0·02439	33
1·026	0·01361	16	1·073	0·02472	33
1·027	0·01377	17	1·074	0·02505	34
1·028	0·01394	17	1·075	0·02539	35
1·029	0·01411	17	1·076	0·02574	35
1·030	0·01428	17	1·077	0·02609	36
1·031	0·01445	18	1·078	0·02645	36
1·032	0·01463	18	1·079	0·02681	37
1·033	0·01481	18	1·080	0·02718	37
1·034	0·01499	18	1·081	0·02755	38
1·035	0·01517	19	1·082	0·02793	39
1·036	0·01536	19	1·083	0·02832	40
1·037	0·01555	19	1·084	0·02872	41
1·038	0·01574	19	1·085	0·02913	42
1·039	0·01593	20	1·086	0·02955	43
1·040	0·01613	20	1·087	0·02998	44
1·041	0·01633	20	1·088	0·03042	45
1·042	0·01653	20	1·089	0·03087	46
1·043	0·01673	21	1·090	0·03133	47
1·044	0·01694	21	1·091	0·03180	48
1·045	0·01715	21	1·092	0·03228	49
1·046	0·01736	22	1·093	0·03277	50

TABLE LXI.—VISCOSITIES IN POISES OF MIXTURES OF GLYCEROL AND WATER—*continued*.

Specific Gravity at $\frac{20°}{20°}$ C.	Viscosity in Poises at 20° C.	Differences.	Specific Gravity at $\frac{20°}{20°}$ C.	Viscosity in Poises at 20° C.	Differences.
1·094	0·03327	50	1·145	0·08367	185
1·095	0·03777	51	1·146	0·08552	191
1·096	0·03428	52	1·147	0·08743	197
1·097	0·03480	53	1·148	0·08940	204
1·098	0·03533	54	1·149	0·09144	212
1·099	0·03587	55	1·150	0·09356	219
1·100	0·03642	56	1·151	0·09575	226
1·101	0·03698	58	1·152	0·09801	233
1·102	0·03756	59	1·153	0·10034	240
1·103	0·03815	60	1·154	0·10274	248
1·104	0·03875	62	1·155	0·10522	256
1·105	0·03937	64	1·156	0·10778	264
1·106	0·04001	66	1·157	0·11042	272
1·107	0·04067	68	1·158	0·11314	281
1·108	0·04135	70	1·159	0·11595	290
1·109	0·04205	72	1·160	0·11885	299
1·110	0·04277	74	1·161	0·12184	309
1·111	0·04351	76	1·162	0·12493	319
1·112	0·04427	78	1·163	0·12812	329
1·113	0·04505	80	1·164	0·13141	340
1·114	0·04585	82	1·165	0·13481	351
1·115	0·04667	84	1·166	0·13832	362
1·116	0·04751	86	1·167	0·14194	374
1·117	0·04837	88	1·168	0·14568	386
1·118	0·04925	90	1·169	0·14954	39
1·119	0·05015	93	1·170	0·1534	41
1·120	0·05108	96	1·171	0·1575	41
1·121	0·05204	98	1·172	0·1616	43
1·122	0·05302	101	1·173	0·1659	45
1·123	0·05403	103	1·174	0·1704	47
1·124	0·05506	105	1·175	0·1751	49
1·125	0·05611	108	1·176	0·1800	51
1·126	0·05719	110	1·177	0·1851	53
1·127	0·05829	113	1·178	0·1904	56
1·128	0·05942	115	1·179	0·1960	59
1·129	0·06057	118	1·180	0·2019	63
1·130	0·06175	120	1·181	0·2082	68
1·131	0·06295	123	1·182	0·2150	72
1·132	0·06418	126	1·183	0·2222	75
1·133	0·06544	129	1·184	0·2297	78
1·134	0·06673	132	1·185	0·2375	82
1·135	0·06805	136	1·186	0·2457	87
1·136	0·06941	140	1·187	0·2544	90
1·137	0·07081	144	1·188	0·2634	95
1·138	0·07225	148	1·189	0·2729	98
1·139	0·07373	153	1·190	0·2827	103
1·140	0·07526	158	1·191	0·2930	106
1·141	0·07684	163	1·192	0·3036	111
1·142	0·07847	168	1·193	0·3147	115
1·143	0·08015	173	1·194	0·3262	121
1·144	0·08188	179	1·195	0·3383	124

TABLE LXI.—VISCOSITIES IN POISES OF MIXTURES OF GLYCEROL AND WATER—*continued.*

Specific Gravity at $\frac{20^\circ}{20^\circ}$ C.	Viscosity in Poises at 20° C.	Differences.	Specific Gravity at $\frac{20^\circ}{20^\circ}$ C.	Viscosity in Poises at 20° C.	Differences.
1·196	0·3507	130	1·229	1·411	77
1·197	0·3637	134	1·230	1·488	84
1·198	0·3771	140	1·231	1·572	91
1·199	0·3911	144	1·232	1·663	99
1·200	0·4055	150	1·233	1·762	108
1·201	0·4205	155	1·234	1·870	117
1·202	0·4360	159	1·235	1·987	127
1·203	0·4519	165	1·236	2·114	137
1·204	0·4684	170	1·237	2·251	146
1·205	0·4854	180	1·238	2·397	158
1·206	0·5034	195	1·239	2·555	168
1·207	0·5229	207	1·240	2·723	181
1·208	0·5436	220	1·241	2·904	193
1·209	0·5656	240	1·242	3·097	206
1·210	0·5896	257	1·243	3·303	219
1·211	0·6153	273	1·244	3·522	234
1·212	0·6426	289	1·245	3·756	245
1·213	0·6715	305	1·246	4·001	260
1·214	0·7020	321	1·247	4·261	286
1·215	0·7341	339	1·248	4·547	311
1·216	0·7680	357	1·249	4·858	341
1·217	0·8037	377	1·250	5·199	374
1·218	0·8414	397	1·251	5·573	413
1·219	0·8811	417	1·252	5·986	455
1·220	0·9228	437	1·253	6·441	508
1·221	0·9665	459	1·254	6·949	562
1·222	1·0124	481	1·255	7·511	623
1·223	1·0605	505	1·256	8·134	690
1·224	1·111	52	1·257	8·824	774
1·225	1·163	54	1·258	9·598	835
1·226	1·217	58	1·259	10·433	934
1·227	1·275	64	1·260	11·367	
1·228	1·339	72			

Determination of Viscosity under High Pressures.—The probability of a considerable variation in the viscosities of lubricating oils between the ordinary atmospheric pressure and pressures of the order of 5 tons per square inch, such as was found by O. Faust[1] at Gottingen in 1913 in the case of ethyl ether, ethyl alcohol, and carbon disulphide, received the attention of the Lubricants and Lubrication Inquiry Committee, owing to the fact that in modern power transmission gears pressures of this order are not uncommon. An apparatus was accordingly designed by T. E. Stanton and J. H. Hyde, and constructed at the National Physical Laboratory, with which the experiments referred to in Chapter IV. on p. 83 were made. This apparatus consisted essentially of a system of two horizontal and two vertical tubes, the upper horizontal (glass) tube being of known dimensions and capillary bore, and the system forming a closed circuit of liquid under a known pressure, the lower half

---

[1] A reprint of this paper is contained in Appendix I. of the *Report of the Lubricants and Lubrication Inquiry Committee*, 1920, pp. 39–49.

of the circuit containing mercury and the upper half the oil under test. The parts of the apparatus subjected to high pressure were made of high tensile steel, and the glass capillary tube was enclosed in hydraulic tubing. The system of tubes was fixed in an aluminium frame carrying a steel knife edge supported upon an agate plane, the knife edge being fixed in such position that one end of the apparatus was heavier than the other. By tilting the apparatus and displacing the mercury by a given amount, and then restoring it to the horizontal position, a head of mercury resulted, which caused flow to take place round the circuit and through the capillary tube. By means of a spiral spring attached to the heavier end of the apparatus, and so designed that its rate of extension was equal to the rate of change of head of the mercury, a constant known pressure difference was maintained during a test, and the velocity of flow could be calculated from the rate of extension of the spring, as measured by a pointer fixed at the end of a lever to which the spring was attached. All the data required for the determination of the viscosity in absolute units were thus obtained. The viscometer was supported in an oil bath, provided with a stirrer and thermostat. A full description and drawing of the apparatus, together with the method of calculation and the results obtained, will be found in the Report of the Committee;[1] also in a paper by J. H. Hyde communicated to the Royal Society in 1920.[2]

The determinations of viscosity were made at 40° C., and it was found that all the mineral oils tested, ranging in viscosity from that of filtered F.F.F. Cylinder Oil to that of Bayonne Engine Oil, were very much more susceptible to change of viscosity under pressure than the animal and vegetable oils. Thus, at 6·5 tons per square inch, the viscosity of "Mobiloil B.B." had increased in the ratio of nearly 27 to 1, as compared with the viscosity under atmospheric pressure, that of "Mobiloil A" and filtered cylinder oil nearly 11 to 1, and Bayonne Oil 9½ to 1, but the viscosity of castor oil has only increased in the ratio of 4½ to 1, and the other vegetable and animal oils tested had increased still less. The values of $\frac{\text{viscosity}}{\text{density}}$ in C.G.S. units compared with the values at atmospheric pressure are plotted in the diagram, fig. 65A.

In a separate research, also included in these publications,[3] Mr. Hyde determined the effect of high pressures on the densities of the oils of which the viscosities were determined, and he found that all the oils tested were equally compressible, and resembled water in this respect. The changes in viscosity were, therefore, not connected with the changes in density.

Commercial Viscometry.

A very rough idea of the relative viscosity of an oil may be formed by shaking it in a bottle and observing the rate at which air-bubbles rise in the oil; the more sluggish the movement of equal-sized bubbles, the greater the viscosity of the oil.

A rough quantitative method is to fill a 10 c.c. pipette with the oil, fix it in a vertical position in a clamp, and count the number of seconds occupied by the oil in flowing from a mark on the upper stem to another mark on the lower stem. Then clean the pipette with ether, dry it, and make another similar experiment with some standard oil, say rape. For the results to be at all comparable, the oils must be at the same temperature when the experiment is made. To ensure this, small beakers containing 20 to 30 c.c. of each

---

[1] See Appendices VII. and VIII. of *Report*, pp. 80–85.

[2] *Proc. Roy. Soc.*, A, xcvii. (1920), pp. 240–259.

[3] *Ibid.* See also Appendix IX. of *Report*, pp. 86–90.

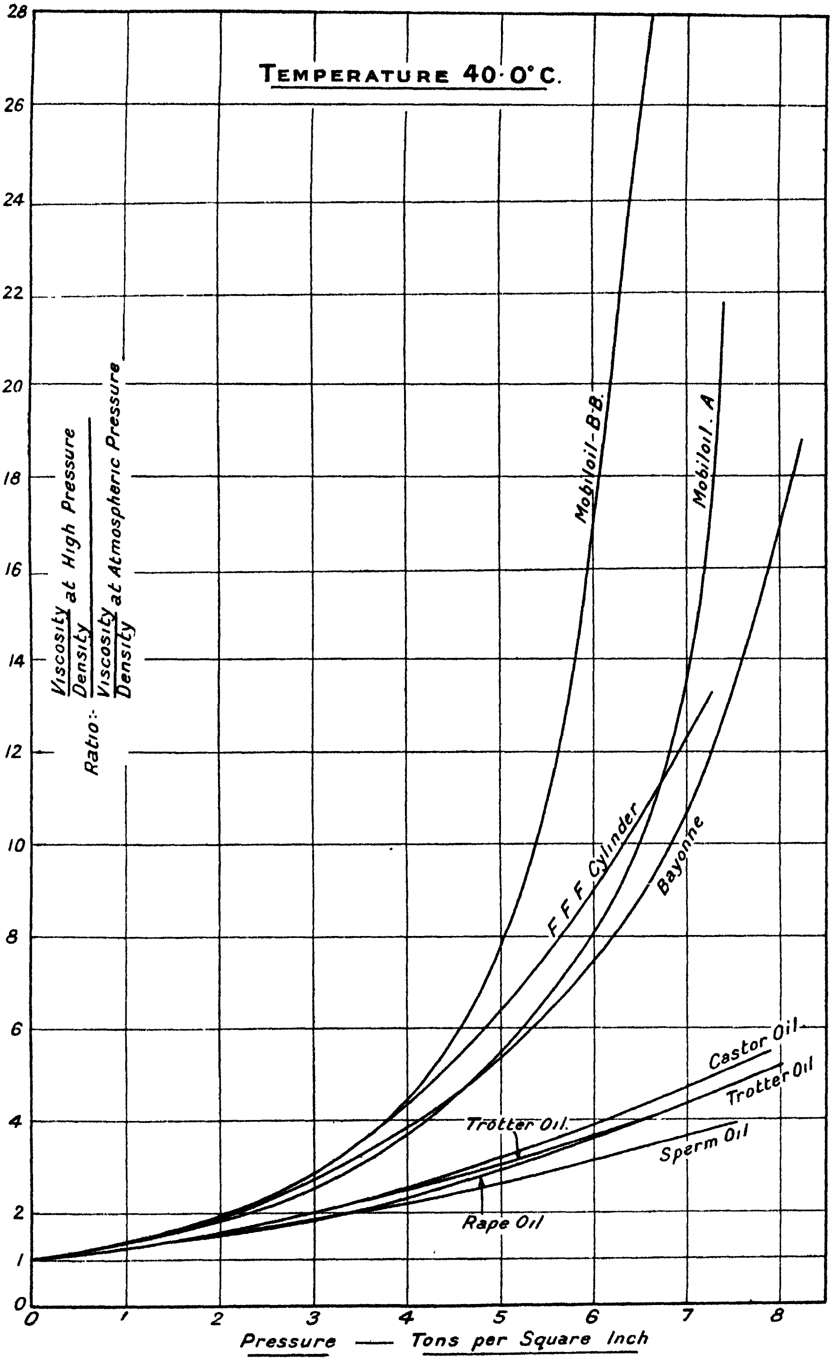

FIG. 65A.

oil should be allowed to stand on a table, side by side, for an hour before making the test; the pipette may then be filled from each beaker in succession.

As a rough test for sorting quickly a number of samples of oil, this is useful, but for accurate work a properly constructed viscometer must be employed.

J. G. A. Rhodin[1] determines the viscosities of oils by means of a simple form of absolute viscometer, in which the formation of drops is the basis of observation. The period of time required for the fall of 30 drops is noted, and the drops are carefully weighed. From the weight of a single drop, the very small counter-pressure due to the surface tension of the drops is calculated and allowed for by an appropriate deduction from the observed head. Rhodin finds the weight of the drops from a perfectly clean tube remarkably constant. Thus, in two experiments thirty drops weighed, respectively, 1·2220 grammes and 1·2214 grammes. Rhodin also finds that the correction for surface tension of the drops is, within 0·1 mm., the same for all oils from sperm oil to heavy cylinder oils. The capillary tubes used had the following dimensions, viz.:

$$1.\ \left\{\begin{array}{l} r_0 = 0{\cdot}83502 \text{ mm.} \\ l = 386{\cdot}9 \quad ,, \end{array}\right\} \text{for } t = 15^\circ \text{ C.}$$

$$2.\ \left\{\begin{array}{l} r_0 = 0{\cdot}55322 \quad ,, \\ l = 401{\cdot}7 \quad ,, \end{array}\right\} \text{for } t = 100^\circ \text{ C.}$$

The head is read off by means of a cathetometer. The following results show the accuracy attainable in duplicate experiments, the head varying in each experiment:—

Description of Oil.	American Mineral Oil (·9165).	Valvoline Oil (·876).	Cylinder Oil.	Cylinder Oil.
Temperature .	15° C.	15° C.	100° C.	100° C.
Value of η in poises				
(1) . . .	2·2743	1·836	0·3406	0·2424
(2) . . .	2·2949	1·804	0·3403	0·2417
(3) . . .	2·2812	...	...	...

Rhodin finds the method simple and accurate, and it has the advantage of giving absolute instead of arbitrary results. The only drawback is the somewhat lengthy calculation, but this can be curtailed by adopting a uniform method of observation. Rhodin's viscometer in its complete form was illustrated and fully described in the *Engineer*, 13th June 1913, p. 638.

A viscometer capable of giving the true relative viscosity in terms of the viscosity of water or some other standard liquid is that of Ostwald, shown in fig. 66. It consists of a glass U-tube, one limb of which is of capillary bore from *d* to *b*. A known measure of the liquid is introduced into the wider limb at *f*, and sucked up at *a*, until the level has risen above the mark *c*. The time occupied in flowing back from *c* to *d* through the capillary *db* is noted.

If t and t_1 be the respective times taken by the oil and standard liquid, d and d_1 their respective densities, and η and η_1 their respective viscosities, then $\eta : \eta_1 = dt : d_1t_1$ and

$$\eta = \eta_1 \frac{dt}{d_1t_1},$$

from which, if the absolute viscosity of the standard liquids be known, that

---

[1] Private communication prior to 1912.

of the oil can be calculated. If water be the standard liquid and its viscosity be taken=1, then the *specific viscosity* of the oil$=\dfrac{dt}{d_1t_1}$.

In practice, the viscometer is held in a heavy metal frame, suspended vertically from a pivot in a water bath, the temperature of which is maintained constant by means of a thermostat. The dimensions of the capillary must be such as to comply with the conditions named on p. 83, and the bulb *h* must be of such size that the time of outflow of water is about 100 seconds. It is obvious that this viscometer could only be used at ordinary temperatures for the thinner lubricating oils, and at such temperatures for the thicker oils as would reduce their viscosities to sufficiently low figures. Mabery and Matthews used it in their experimental investigations for oils having specific viscosities as high as 88 (water=1).

In November 1923 The British Engineering Standards Association issued a specification (No. 188—1923) of the **British Standard Method for the Determination of Viscosity in Absolute Units,** an abstract of which is printed in the Appendix on pp. 617 to 624, so far as relates to tube viscometers. In this specification the correct dimensions are given in minute detail of viscometers of the Ostwald type, suitable for determining the absolute viscosity in C.G.S.units of all lubricating oils, with the methods of operation and calibration recommended by the Association.

The viscometers mostly used for practical laboratory work have very short efflux tubes of comparatively wide bore. From these instruments a running can be made in a short space of time, and the parts are easily cleaned and kept in order. But the rate of efflux is far from being proportional to the viscosity of very fluid liquids and water, though in the case of lubricating oils having a viscosity at least as great as that of sperm oil at 60° F. the error does not exceed about 2 per cent. The best known instruments of this class are Redwood's, which is the standard instrument in this country; Engler's and Kunkler's, which are used on the European continent; and Saybolt's, used in the United States. The glass viscometer devised by Coleman and improved by Archbutt is one of the most simple for practical purposes. It will be described as the Coleman-Archbutt viscometer. Lidstone's Mercurial Viscometer (p. 209) is equally simple, and requires much less oil. Doolittle's Torsion Viscometer will be described, and the Cup and Ball Viscometer devised by Michell for use in the workshop.

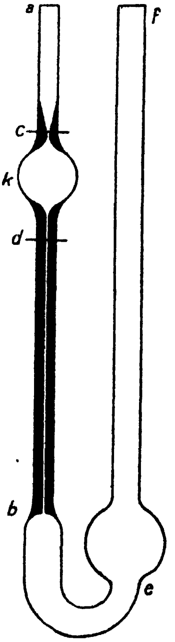

FIG. 66.

Redwood's Standard Viscometer.[1]—(*Construction.*)—This instrument (fig. 67) consists of a cylindrical brass vessel (the oil-cup) A, thickly plated with silver internally, having a thick metal bottom, slightly concave on the inside, in the centre of which the agate jet J, is fixed. A pointed stud B, fixed to the side of the vessel, determines the initial head of the oil. A small brass ball-valve fixed to a wire V, both heavily silver-plated, when resting in the hemispherical cavity in the agate jet, closes the orifice; when raised so as to allow the oil to flow out, it is suspended, by a small hook, from the side of the vessel. The cylinder A is fixed, by means of a screw thread and leather washer, in the centre

---

[1] **The instrument here described is known as the Redwood No. 1 Viscometer. A modified form with wider jet, known as No. 2, has been devised for oils of exceptionally high viscosity, chiefly fuel oils.**

of the brazed copper vessel C, which is furnished with a tap, D, and a copper heating tube E, projecting at an angle of 45° from the side, close to the bottom. This vessel contains water or oil, by means of which the temperature of the oil in A is maintained constant, and is provided with a stirring apparatus consisting of four light metal vanes, H, fixed to a thin copper tube which revolves smoothly round the cylinder A, the tube having a broad curved flange at the top to prevent any of the liquid in C from being splashed into the oil in A. The stirrer is rotated to and fro by means of the handle K, and carries with it the thermometer T, which registers the temperature of the fluid bath. Another thermometer, T_1, held by a spring clamp S, which slides on the rod R, is immersed in the oil undergoing test. A brass cover in two parts is now provided with all standard instruments to fit over the upper end of the oil-cup. Each half is fitted with insulating handles for convenience of lifting, and suitable holes are provided for the oil-cup thermometer and valve wire to pass through. The instrument is supported on a tripod stand furnished with levelling screws. The standard dimensions of the oil-cup and jet laid down by the Institution of Petroleum Technologists in 1924 are as follows:—

Dimensions.	Normal, mm.	Tolerance, mm.
Internal diameter of oil-cup, . . .	46·5	±0·5
Internal depth of cylindrical portion of oil-cup, ...	90·0	±0·25
Height of filling-point above upper end of jet (to be adjusted after jet is fixed), .	82·5 (to top of agate)	±2·00
Internal length of jet, ...	10·0	±0·02
Internal diameter of jet, ...	1·6	±0·01

The thermometers used must comply with the specification[1] and be verified at the National Physical Laboratory. The 50 c.c. flask must conform to the N.P.L. Class A.

Method of Experiment.—The interior of the oil-cup A and the orifice of the jet are first inspected. They must be perfectly clean, dry, and free from any loose particles which might obstruct the free flow of the oil. In examining the jet, a small mirror held below is useful. After inspection, the instrument is levelled. The outer vessel C is then filled with water or heavy mineral oil, according to the temperature at which the viscosity is to be determined, water being used for all temperatures up to about 200° F. The height of the liquid in C should be slightly above that of the oil in A. The temperature of the water-bath, having been adjusted, is maintained constant during the test by continual stirring, the thermometer being closely watched, and any tendency of the mercury to rise or fall corrected by additions of colder or warmer water, the excess of water being drawn off through the tap D. Temperatures much above the normal are maintained by heating the tube E, by means of a gas or spirit flame. The oil to be tested, if quite clear and bright, is next poured into A until the point of the stud B is just covered, the jet being first closed by the valve; if the oil be not clear, or if it be a dark-coloured oil, it must first of all be strained through fine wire gauze or muslin. Thick oils may be warmed before straining, but they must not be heated more than

---

[1] See *Standard Methods of Testing Petroleum and its Products*, published by the Institution of Petroleum Technologists, Aldine House, Bedford Street, Strand, London, W.C.2, price 6s. net.

a few degrees above the temperature at which the test is to be made. The oil should be brought to nearly the required temperature before being poured into the viscometer, because the adjustment afterwards takes place slowly. To eliminate hysteresis, in standard tests the oil must be heated for one hour at 212° F., allowed to cool, and be maintained at 60° F. ($\pm$10° F.) for not less than 24 hours before testing. The thermometer T_1 is immersed in the oil to such a depth that the bulb does not become uncovered during the test, and it is not afterwards moved. A narrow-necked flask, holding 50 c.c. to a mark on the neck, is placed below the jet to receive the oil. If the test is to be made at a temperature more than a few degrees above or below that of the air of the room, the body of the flask must be surrounded by a thick layer of cotton-wool contained in a beaker, the neck and graduation-mark being left exposed to view. As there is generally a slight leakage from the valve V, the flask should not be placed in position until the last moment.

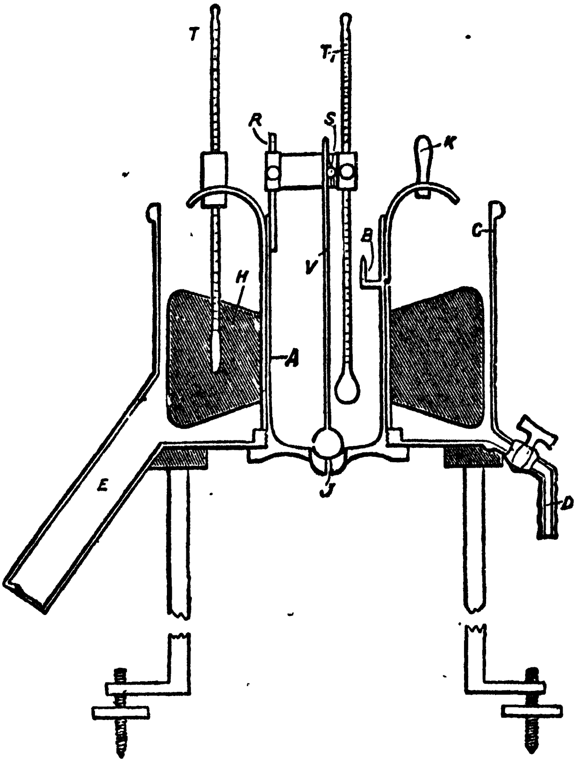

FIG. 67.

When *both* thermometers register the desired temperature,[1] the height of the oil in A is finally adjusted so that the point of the stud B lies exactly in the surface, and the measuring flask is placed under the jet. The valve V is then raised, a stop-watch being started at the same moment, and the number of

---

[1] In making tests at temperatures much above that of the atmosphere the liquid in the outer bath must be kept slightly above the temperature of the test. In testing oils at 100° F. the outer bath must be kept at 101° to 101·5°, and in making tests at 212° F. the oil in the outer bath must be kept at 214°–215°.

seconds occupied in filling the flask up to the 50 c.c. mark is ascertained. This completes the test. In important cases, and always if the operator be inexperienced, the oil should be poured back into A, a little more being added to bring it up to the mark, and the test repeated, the measuring flask being first rinsed out with ether and dried. Duplicate tests ought not to differ more than about 1 per cent.; greater differences will probably be due to neglecting to maintain a constant temperature.

Calibration.—This instrument was originally calibrated with refined rape oil; but, as different samples of genuine rape oil vary in viscosity, Redwood proposed the adoption of the arbitrary number 535, which is the average number of seconds required by 50 c.c. of rape oil to flow out of his viscometer at 60° F. The relative efflux time at x° F. of any oil, compared with the efflux time at 60° F. of rape oil of sp. gr. 0·915, which is taken as 100, is then found by the following formula:—

$$\text{Relative efflux time (rape oil at } 60^\circ\text{ F.}=100)=\frac{td\,100}{535\times0{\cdot}915},$$

where t is the number of seconds required for the outflow of 50 c.c. of the oil at x° F., and d is the specific gravity of the oil at the same temperature.

This method is now obsolete, and the *Standard Method* of the I.P.T. specifies that results are to be expressed as follows:—

(1) Time in seconds at the temperature of the test.

(2) In absolute units (centimetre-gramme-second units, or poises) the following formula being employed:

$$\frac{V}{D}=AT-\frac{B}{T},$$

where V=the viscosity of the oil in poises, D=the density at temperature of test, T=the time (seconds) for outflow of 50 c.c. A and B are instrument constants. The value of A with the standard viscometer is 0·0026; that of B is 1·7.

The Redwood viscometer was critically investigated by W. F. Higgins in 1913,[1] on whose researches the above formula is based. Very nearly the same formula is given by W. H. Herschel.[2] It must of course be understood that the formula can only be depended on to give correct results in the case of instruments which comply strictly with the standard dimensions and other requirements, and all such standard instruments are now tested at the National Physical Laboratory and are supplied with the N.P.L. certificate. For further particulars of this viscometer and the Redwood No. 2 viscometer, with the Official Standard Method of testing, reference should be made to the booklet of *Standard Methods*[3] issued by the Institution of Petroleum Technologists, pp. 45–54.

The Coleman-Archbutt Viscometer.[4]—This instrument (fig. 68) is an improved form of the well-known jacketed glass viscometer first used by Coleman about 1869.[5] It consists of a glass burette contained in an outer jacket, with a funnel for pouring in hot or cold water, a tube for running off water, and a stirrer for thoroughly mixing the water in the jacket. Being made of glass it is fragile; but, with reasonable care, an instrument may last for many years. It may be calibrated with glycerin (see p. 224) so as to

---

[1] *National Physical Laboratory Collected Researches*, xi. 1–16.

[2] *Technologic Paper*, No. 210, *of the U.S. Bureau of Standards*, 1922.

[3] See footnote on p. 204.

[4] Made by Messrs. Baird & Tatlock.

[5] *Jour. Soc. Chem. Ind.*, v. (1886), p. 359

give results in absolute measure, and it has the advantage of being very convenient to work with. Thus, the temperature of the oil can be readily adjusted in the efflux-tube itself, by stirring with a thermometer and raising or lowering the temperature of the water in the outer jacket; there is no need for a separate measuring vessel, the volume of oil which flows out being measured by marks on the efflux-tube; a test can be made with as little as 25 c.c. of oil; and after the test has been made the tube is empty and ready

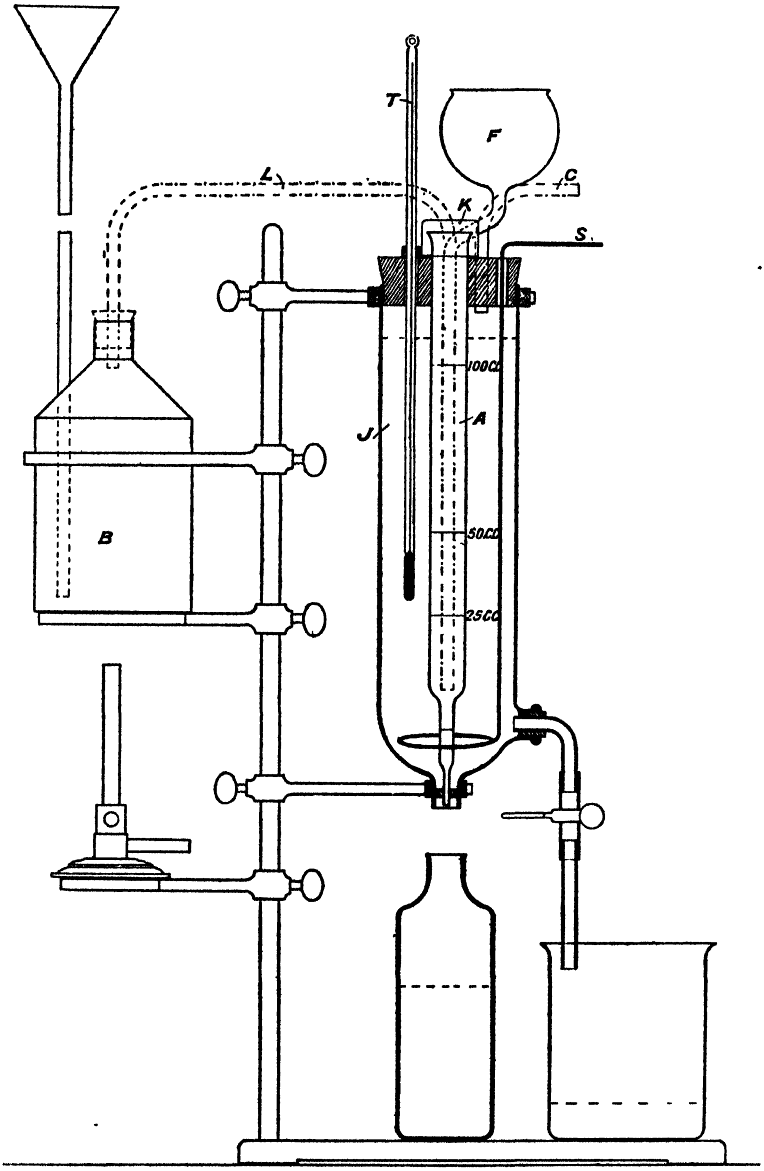

FIG. 68.

for the next test. Oils can be tested in this apparatus at the temperature of boiling water, which is high enough for most purposes.

Construction.—The efflux-tube A is about 15 inches in length. The upper 12 inches is made of thin-walled glass tubing, about 1 inch in internal diameter; it then narrows to a diameter of about $\frac{5}{16}$ inch for 2 inches, and terminates in a thick-walled jet, about 1 inch long and of such internal diameter (about 1·9 mm.) that 100 c.c. of refined rape oil at 60° F. takes about ten minutes to run out. If the oil runs too quickly, the orifice of the jet may be slightly closed by fusing the edges in the flame; if too slowly, the jet may be shortened a little. Four circumferential marks are etched upon the tube. The lowest or zero mark is rather above the middle of the narrow portion; the other three marks are on the wide portion, and divide the tube above the zero mark into capacities of 25 c.c., 50 c.c., and 100 c.c. The volume of oil used for a test may, therefore, be varied, according to the viscosity and the quantity of oil available. Of fairly fluid oils, *e.g.* rape or machinery oils at 60° F., and all oils at 212° F., 100 c.c. are used; of more viscous oils, *e.g.* cylinder oils at 60° F. and 100° F., 25 c.c. is a suitable quantity. The tube must be separately standardised from each mark, as the times of efflux of the different volumes bear no simple relation to each other.

The outer jacket J is about 3½ inches in external diameter, and has a short, narrow neck at the bottom and another at the side. The tube A is fixed in the jacket by means of a thick india-rubber bung at the top and a thin disc of rubber, not more than $\frac{3}{16}$ inch thick, at the bottom, through which the jet projects not more than $\frac{3}{16}$ inch. Thus, the oil in the tube is surrounded by the water in the jacket until it has reached nearly to the end of the jet, and the temperature is maintained constant until the oil has passed out of the tube. The jet is protected from change of temperature, as well as from fracture, by being contained entirely within the neck of the jacket. The large bung at the top is perforated by four small holes. One, which is lined with a short piece of glass tube, is for the brass stirring-wire S; another is for the glass funnel F, which fits rather loosely, and is replaced by a tube L, conveying steam from the boiler B,[1] for determinations at 212° F.; a third hole is for the bent tube C, for the escape of steam, and the fourth is for the thermometer T.

In putting the apparatus together, the tube A is first wetted and passed through the central hole of the bung, far enough for the jet to reach nearly to the end of the lower neck when the bung is fixed in the jacket; the brass stirring-wire S, which terminates in a brazed ring at the lower end, is then passed through its hole and bent over at the top to form the handle; the bung is then carefully inserted into the jacket, and the jet is pushed through the disc of rubber at the lower end. Finally, the tube C is inserted in the bung.

Method of Experiment.—The tube A and jet are first carefully cleaned and dried; the jet is then closed by means of a small peg of soft wood. Water at the proper temperature is next poured into the jacket, and the oil, previously strained if necessary, and brought to the same temperature, is poured into the efflux-tube up to about half an inch above the mark it is intended to run it from. The oil is stirred with the thermometer, avoiding the formation of air-bubbles, until the temperature is exactly correct, the final adjustment being easily made by slightly raising or lowering the temperature of the water-bath. The thermometer is then taken out of the oil, which is allowed to rest until perfectly quiescent. The wood peg is then withdrawn, and the time taken by the oil to flow down to the zero mark is measured by a stop-watch,

---

[1] In the figure this tube is shown in dotted lines.

which is started as the surface of the oil passes the upper mark. During the experiment, the temperature is maintained constant by pouring hot or cold water into the jacket, through the funnel, and running off the excess through the side tube as often as required, using the stirrer frequently. The temperature of the water in the outer jacket is indicated by the thermometer T, which is not removed. The open end of the efflux-tube is covered by the inverted beaker K, to prevent water from being splashed in by the stirrer.

In making an experiment at 212° F., the cold water in the jacket is first raised gradually to about 180° F., by pouring in hot water, and then the funnel is replaced by the steam tube L, and steam is blown in from the boiler. When the water boils, the level is lowered sufficiently to prevent splashing, and a brisk ebullition is kept up throughout the test. The oil, previously heated to 212° F., should be poured in just before the water begins to boil, and the tube A covered by its cap.

Calibration.—This viscometer is conveniently used as an adjunct to the Redwood viscometer and may be calibrated by running through it a series of oils of different viscosities of which the Redwood times have been determined with a Standard Redwood instrument. A factor or factors can then be calculated by which the runnings from the instrument can be converted into Redwood times. For routine testing this will be found a great saving in time and labour. The viscometer can also be calibrated with glycerol-water solutions, so as to give results in absolute C.G.S. units (poises or centipoises) as described on pp. 224–229.

The Lidstone Mercurial Viscometer.[1]—This viscometer was originally designed for determining the viscosity of the small quantity of mineral lubricating oil separated from a mixed oil in the course of analysis, and was first described in the *Journal of the Society of Chemical Industry*, vol. xxxvi. (1917), p. 270. A modified form for volatile liquids was subsequently described in the same journal, vol. xxxvii. (1918), p. 148T. The viscometer consists, essentially, of a capillary tube through which the sample is drawn by the flow of mercury, the rate of flow being determined by timing the movement of the meniscus between the liquid and mercury, instead of that between the liquid and air as is usual. As in the Ostwald viscometer, the whole volume of the liquid under test is surrounded by the water in the jacket, and the temperature can, therefore, be readily maintained constant. A further distinctive feature of this viscometer, in which it differs from the usual types, is that the liquid under test flows into instead of out of the test bulb and capillary, which are dry at the commencement of the test; consequently the same volume is always tested, and no error is introduced from oil left clinging to the surface of the glass, which is greater with thick oils than with thin ones. This viscometer, in our opinion, is by far the most convenient for use in commercial laboratories, and it is approved by the British Engineering Standards Association.

Construction.—The apparatus is made entirely of glass and is fitted together with perforated rubber bungs, the whole being conveniently clamped to a vertical support. The general proportions of the apparatus and the disposition of the water jacket are as shown in the figures, which are to scale. Fig. 69 shows the apparatus described in the original paper, which is used when only very small volumes (less than 1 c.c. of oil) are available, and fig. 70 shows the standard apparatus which should always be employed when the quantity

---

[1] Made by Messrs. Baird & Tatlock, London. The description of the standard type of this viscometer is abstracted by permission of the British Engineering Standards Association from B.E.S.A. Specification No. 188, 1923—*British Standard Method for the Determination of Viscosity in Absolute Units*, official copies of which can be obtained from the Secretary of the Association, 28 Victoria Street, Westminster, S.W. 1, price 1s. 2d. post free.

available is sufficient. For viscosities above 0·2 poise (20 centipoises), which includes all lubricating oils, the following dimensions are suitable :--

	Fig. 69.	Fig. 70.
Diameter of capillary BC, .	0·5 mm. ± 0·02 mm.	1·0 mm. ± 0·1 mm.
Length of capillary BC, .	10 cm. ± 2 cm.	15 cm. ± 2 cm.
Diameter of capillary DE, .	1·5 mm. ± 0·2 mm.	3·5 mm. ± 0·5 mm.
Length of capillary DE, .	10 cm. ± 2 cm.	10 cm. ± 2 cm.
Capacity of bulb CD, . .	0·2 c.c. ± 0·05 c.c.	(See below).

In the standard apparatus, fig. 70, the jet at E should taper over 1 cm. length from 3·5 mm. to 1 mm., and the bore of the stopcock must not be reduced

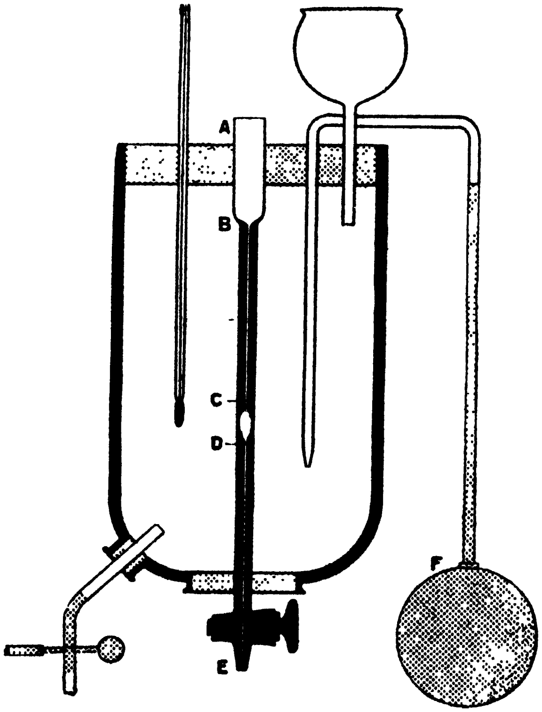

Fig. 69.

below 3 mm. The volume of the bulb CD is determined by the diameter of the capillary BC ; it should be not less than 12·5 c.c. for a 1·1 mm. capillary, and not less than 5·5 c.c. for a 0·9 mm. capillary; the minimum volumes for use with capillaries of intermediate diameter may be deduced from Table III. in Appendix A, on p. 618.

Method of Use.—A rubber stopper with flexible tube is inserted into the upper end of A, clean, dry mercury is sucked up to just above B, and the stopcock is closed. The rubber stopper is removed, and a roughly measured volume of oil, about 0·5 c.c. more than sufficient to fill the bulb CD, is run into the tube

A and allowed to rest on the surface of the mercury for a period of time sufficient for the oil to acquire the temperature of the water in the jacket, which is kept frequently stirred by air from the bellows F, and the temperature is maintained constant by adding warmer or colder water through the funnel as required. To save time, the oil can also be stirred with a thermometer, which is removed before the test is made. The stopcock is then fully opened, and the time taken by the mercury meniscus in passing from the mark at C to the mark at D is observed.

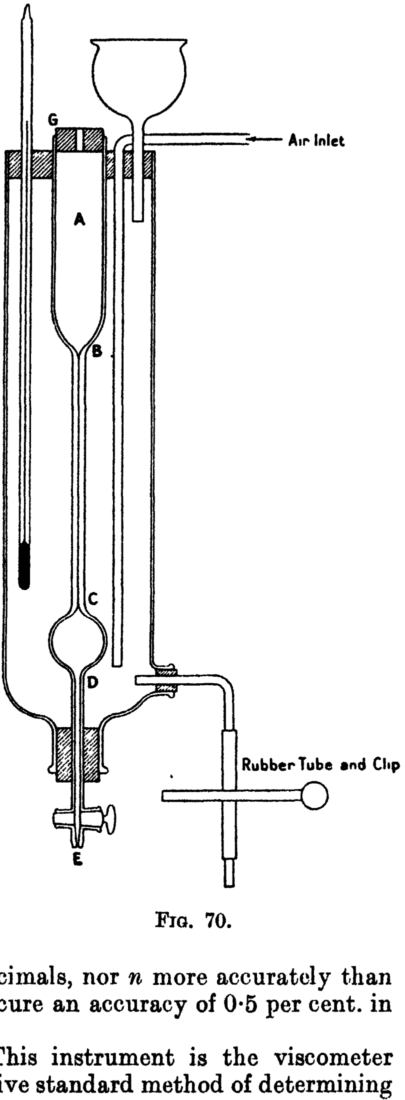

FIG. 70.

Calibration.—The viscometer, fig. 70, is calibrated by performing the above experiment with a sucrose solution containing 60 per cent. by weight of cane sugar. The time of flow of this solution at 15° C. should be over 180 seconds if the specified dimensions have been adhered to. In order to be able to apply the simplified formula given below for the evaluation of viscosities, it is necessary that the dimensions of the tube, stopcock, and jet DE should be checked by determining also the time required for the volume CD of calibrating liquid to flow out when DE is full of this liquid instead of mercury; the time required should be less than 80 per cent. of the time taken in the calibration running at the same temperature. If this condition is fulfilled, the constant of the instrument may be deduced from the relation $k=\eta_s/t_s(d_s+n)$ and viscosities may be calculated by the formula $\eta=kt(d+n)$, where η_s and η are the viscosities, d_s and d the densities, and t_s and t the times of flow of the standard liquid and of the sample respectively, and $n=13{\cdot}6h/l$, where h is the distance from E to the centre of the bulb CD, and l the distance from this centre to the mean level of liquid in AB during a test. For this calculation, d does not need to be known more accurately than to the second place of decimals, nor n more accurately than to 3 per cent. or 4 per cent., in order to secure an accuracy of 0·5 per cent. in the result.

The Saybolt Universal Viscometer.[1]—This instrument is the viscometer specified for testing lubricants in the tentative standard method of determining the viscosity of petroleum products and lubricants issued by the American Society for Testing Materials, October 1925. Fig. 71 shows a sectional view of the standard oil tube, fig. 72 shows an elevation of the receiving flask, and fig. 73 (p. 214) shows a general arrangement of the viscometer with surrounding bath and the flask in position for making a test.

---

[1] Abstracted by permission from Tentative Standard D 88—25T, copies of which can be obtained from the American Society for Testing Materials, 1315 Spruce Street, Philadelphia, Pa.

Apparatus.—The viscometer (fig. 71) is made entirely of metal. The oil tube A is fitted at the top with an overflow cup B, and the tube is surrounded by a bath. At the bottom of the oil tube is a small outlet tube through which the oil to be tested flows into a receiving flask (fig. 72), whose capacity at 20° C. (68° F.) to a mark on its neck is 60±0·15 c.c. The outlet tube is of hard and non-corrodible metal such as stainless steel, monel metal, etc. The inside diameter of neck of flask, at the level where the graduation mark is placed, is 0·8 to 1·1 cm. The lower end of the outlet tube is enclosed by a larger tube, which when stoppered by a cork C acts as a closed air chamber and prevents the flow of oil through the outlet tube until the cork is removed and the test started. A looped string may be attached to the lower end of the cork as an aid to its rapid removal. The temperatures in the oil tube and in the bath are shown by thermometers. The bath may be heated by any suitable means. The oil tube shall be thoroughly cleaned, and all oil entering the oil tube shall be strained through a 100-mesh wire strainer. A stop-watch shall be used for taking the time of flow of the oil, and a pipette shall be used for draining the overflow cup.

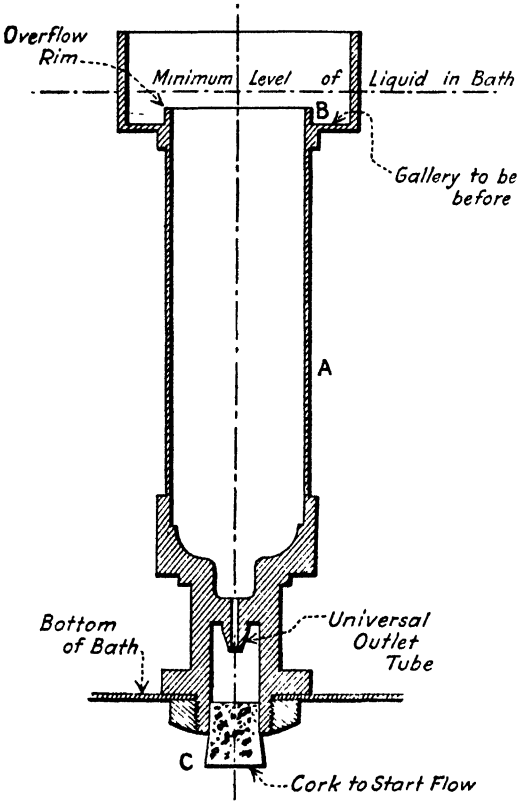

FIG. 71.

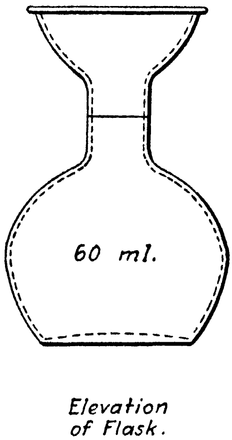

FIG. 72.

The oil tube, which may be standardised by the U.S. Bureau of Standards, shall conform to the dimensions given in Table LXII. The time of flow shall be within ±1 per cent. of the time as obtained with the Bureau of Standards' Master-tube. The bath- and oil-tube thermometers must conform to requirements which are specified in detail in the official method, D88–25T.

TABLE LXII.—DIMENSIONS OF OIL TUBE OF SAYBOLT UNIVERSAL VISCOMETER.

Dimensions.	Minimum. cm.	Normal cm.	Maximum cm.
Inside diameter of outlet tube, . .	0·1750	0·1765	0·1780
Outside diameter of outlet tube at lower end, ...	0·28	0·30	0·32
Length of outlet tube, . . .	1·215	1·225	1·235
Height of overflow rim above bottom of outlet tube, ...	12·40	12·50	12·60
Outside diameter of overflow rim at the top,*	†	..	3·30
Diameter of container, . . .	2·955	2·975	2·995
Depth of cylindrical part of container, .	8·8	..	..
Diameter of container between bottom of cylindrical part of container and top of outlet tube, ...	0·9	..	..

* The section of overflow rim shall be bounded by straight lines, except that a fillet is permissible at the junction with the bottom of the gallery.

† The minimum value shall preferably be not less than 3·2 cm.

Temperature of Testing.—Determinations shall be made at 100° F. (37·8° C.), 130° F. (54·4° C.), or 210° F. (98·9° C.). Viscosities shall be expressed as x seconds (Saybolt Universal), x being the time in seconds for the delivery of 60 c.c. of oil.

Procedure.—In tests at 100° and 130° F. (37·8° and 54·4° C.) the bath temperature throughout the test shall vary not more than ±0·1° F. (0·06° C.) from the predetermined temperature which will maintain thermal equilibrium until the oil tube thermometer is withdrawn. In tests at 210° F. (98·9° C.), a variation of ±0·2° F. (0·12° C.) is permitted. Water shall be used as the bath liquid at 100° and 130° F. (37·8° and 54·4° C.).

Any construction of bath may be employed, provided the bath temperature necessary to maintain thermal equilibrium (while the oil in the tube A is well stirred by the oil tube thermometer) is not in excess of 100·25°, 122·35°, 130·50° and 212° F. (37·9°, 50·2°, 54·7°, and 100° C.) respectively, for the standard temperatures previously mentioned. The level of the bath liquid shall not be lower than 0·5 cm. above the overflow rim of the oil tube. In tests at 210° F. (98·9° C.) the water shall be vigorously stirred, and may be heated by the direct injection of steam near the bottom of the bath. A bath of other suitable liquid may be used, provided it is properly heated and stirred.[1] The heating and stirring of the bath for other temperatures may be accomplished by any suitable means, provided the source of heat is not less than the following distances from any part of the oil tube: 2 in. (5 cm.) with an external heater, 1¼ in. (3 cm.) with an immersion heater. Viscosity determinations shall be made in a room free from draughts, and from rapid changes in temperature. The room temperature shall be between 68° and 86° F. (20° and 30° C.).[2]

---

[1] For example, the bath liquid may be water to which glycerin or salt has been added.

[2] These limits are necessary for extreme accuracy in standardisation and referee tests, but for routine purposes the use of higher temperatures up to 100° F. (37·8° C.) will not ordinarily cause an error of more than 1 per cent.

All oil introduced into the oil tube either for cleaning or for test shall first be passed through the strainer.

To make the test, heat the oil to the necessary temperature and clean out the oil tube. Pour some of the oil to be tested through the cleaned tube. Insert the cork stopper into the lower end of the air chamber at the bottom of the oil tube, sufficiently to prevent the escape of air, but not to touch the small outlet-tube.

Heat the oil to be tested, outside the viscometer, to slightly but not more than 3° F. (1·7° C.) above the temperature at which the viscosity is to be determined, and pour it into the oil tube until it ceases to overflow into the overflow cup. By means of the oil-tube thermometer, keep the oil in the oil tube well stirred and also stir well the liquid in the bath. It is extremely important that the temperature of the bath be maintained constant during the entire time consumed in making the test. When the temperature of the bath and of the oil in the oil tube are constant and the oil in the oil tube is at the desired temperature, withdraw the oil tube thermometer; quickly remove the surplus oil from the overflow cup by means of a pipette so that the level of the oil in the overflow cup is below the level of the oil in the tube proper; place the 60 c.c. flask (fig. 72) in position, so that the stream of oil from the outlet tube will strike the neck of the flask so as to avoid foam. Snap the cork from its position, and at the same instant start the stop-watch. Stir the liquid in the bath during the run and carefully maintain it at the

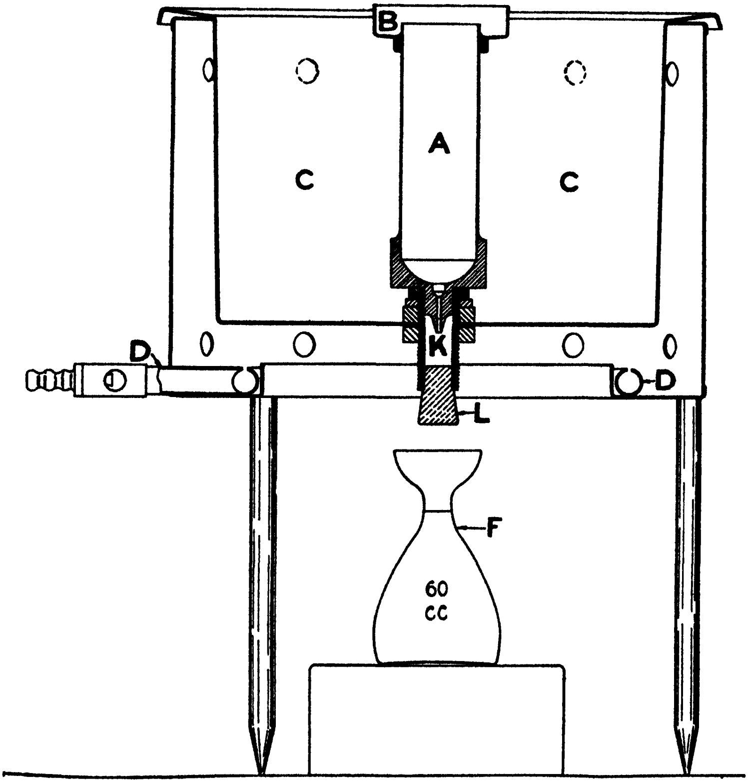

Fig. 73.

previously determined proper temperature. Stop the watch when the bottom of the meniscus of the oil reaches the mark on the neck of the receiving flask.

The time in seconds for the delivery of 60 c.c. of oil is the Saybolt Universal viscosity of the oil at the temperature at which the test was made.

With proper attention to details of method of procedure, duplicate results should not differ from each other by more than 1 per cent.

A viscometer with wider outlet tube, known as the Saybolt Furol Viscometer, is used for testing fuel oils and other oils of similar viscosity. The dimensions are given in Tentative Method D88—25T.

Engler's Standard Viscometer.—*Construction.*—One form of this instrument is shown in figs. 74 and 75. The inner oil vessel A is made of brass, gilt inside, and has a lid A_1, which carries the thermometer *t*. In the centre of the concave bottom is the jet *a*, 20 mm. long, 2·9 mm. in diameter at the upper end, tapering to 2·8 mm. at the lower end; it is made of platinum for standard work, but for ordinary work brass is used. The plug valve *b*, of hard wood, which closes the jet, passes through a tube fixed in the lid, and can be raised without removing the cover. Three pointed studs *c*, fixed at equal distances above the bottom of the vessel, indicate the proper height of the oil, and at the same time serve for levelling the instrument; they mark a volume of 240 c.c. The outer bath B is filled with water when working at temperatures not exceeding 50° C.; for higher temperatures a heavy mineral oil is used, which can be heated by means of the ring burner *d*. The oil flowing from the jet is received in the measuring flask C, which has a mark at 200 c.c. and another at 240 c.c.

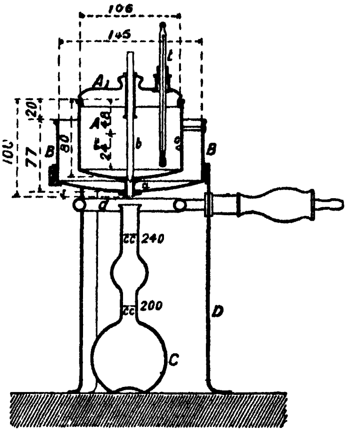

FIG. 74.

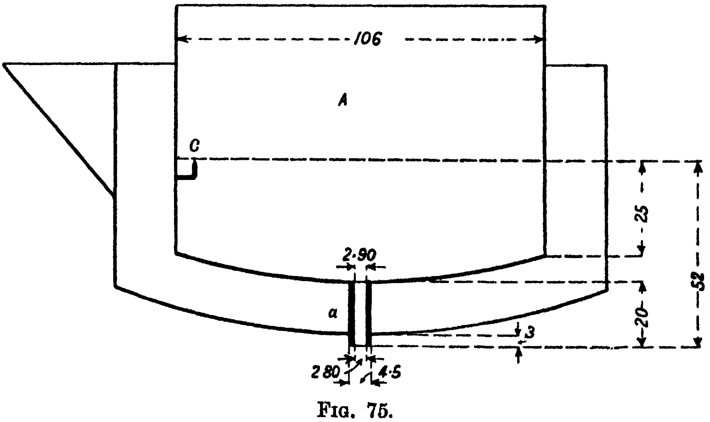

FIG. 75.

Calibration.—This is done with water at 20° C. The vessel A is first thoroughly rinsed out successively with ether, alcohol, and water, the jet being cleaned by means of a feather or a roll of paper. After the water has drained out, the jet is closed by a valve which has not been used for oil. The measuring flask is filled to the 240 c.c. mark with water at 20° C., which is then poured into the oil cup A, and should fill it exactly to the level of the studs after the flask has been well drained. The outer bath should be previously filled with water at 20° C. Having adjusted the surface level, if necessary, by taking out or adding a few drops of water, and levelling the apparatus so that the points of the three studs lie in the surface of the water, the temperature of the water both inside and outside the cup is brought exactly to 20° C. and then, after allowing time for the water in A to become perfectly still, the plug valve is raised and the water allowed to flow from A into the dry measuring flask. The time of efflux of 200 c.c. will be from 50 to 52 seconds, if the instrument has been made of the standard dimensions given in the figure. The test must be repeated, and the mean of three experiments which do not differ by more than 0·5 second is the efflux time of water at 20° C. The nearest whole number is taken as the unit.

Method of Experiment.—In testing oils, the vessel A and the jet are first thoroughly rinsed with alcohol, then with ether, and dried. The oil, previously strained or filtered to remove suspended matter and water, is poured into A up to the level of the studs, and is stirred by the thermometer until the desired temperature has been reached. The liquid in B is adjusted to the same temperature. After allowing the oil in A to become perfectly still, the plug is raised, and the time required for the outflow of 200 c.c. of oil is noted. Supposing the efflux time of water at 20° has been found to be 54 seconds, and the sample of oil required 360 seconds at 50° and 90 seconds at 150°, then the

Specific viscosity ("*Engler degree*," "*Englergrad*") at 50° C. $=\frac{360}{54}-6{\cdot}66$,

" " " " " at 150° C. $=\frac{90}{54}=1{\cdot}66$.

By agreement between the testing institutions,[1] the inner vessel and jet of Engler's standard viscometer must have the following dimensions (see fig. 75):—

	Millimetres.
Inside diameter of gilt inner vessel A, ...	$106 \pm 1{\cdot}0$
Height of cylindrical part below the gauge mark *c*, . .	$25 \pm 1{\cdot}0$
" of gauge-mark above lower end of jet *a*, . . .	$52 \pm 0{\cdot}5$
Length of jet, ...	$20 \pm 0{\cdot}1$
Inside diameter of jet, upper end, ...	$2{\cdot}9 \pm 0{\cdot}02$
" " " lower end	$2{\cdot}8 \pm 0{\cdot}02$
Length of jet projecting below lower part of outer vessel, .	$3{\cdot}0 \pm 0{\cdot}3$
Outside diameter of projecting end of jet, ...	$4{\cdot}5 \pm 0{\cdot}2$

The jet may either be made wholly of platinum or thickly plated internally with platinum. The interior of the jet must be smooth and free from irregularities.

From Ubbelohde's work on the Engler viscometer, Higgins[2] has deduced the following equation connecting absolute viscosity (η) with the time of efflux (T) and the density (δ):—

$$\eta=\left(0{\cdot}001435\mathrm{T}-\frac{3{\cdot}22}{\mathrm{T}}\right)\delta.$$

---

[1] *Chem. Zeit.*, **31** (1907), 441.

[2] *Nat. Phys. Lab., Collected Researches*, xi. 14.

Herschel[1] gives the following equation as more accurate :—

$$\eta=\left(0{\cdot}00147\mathrm{T}-\frac{3{\cdot}74}{\mathrm{T}}\right)\delta.$$ [2]

The Engler-Kunkler Viscometer.—*Construction.*—Engler's viscometer has the defect of containing no stirrer, and when making tests at high temperatures it is found that the temperature of the oil varies sensibly during efflux. Engler and Kunkler have accordingly designed a modified instrument in which the viscometer and measuring flask are enclosed in a double-walled octagonal air-bath made of stout brass plate 35 cm. high and 20 cm. wide, figs. 76 and 77. It stands upon four triangular feet *a*, the outer sloping sides of which rest on the inside edge of the ring of a tripod-stand, so that, by shifting the apparatus about, the oil in the cup can be easily levelled. The oven is heated by the flame of a Bunsen burner placed under the copper bottom plate *b*, which has a deep concavity in the centre and is screwed to the bottom flange with an asbestos ring between. Supported above this on the stand *c*, and shielded from direct radiation by the double asbestos disc *f*, is the measuring flask *e*. The viscometer stands upon four legs on the plate *g*, which rests upon a projecting rim ; this plate has a hole in the centre for the oil to pass through, and four oval tubes *i*, reaching above the rim of the oil-vessel, through which and the central hole the heated air from below circulates and maintains a uniform temperature. Glass windows *ll* and *mm* on opposite sides of the casing, and another in the lid, illuminate the interior and enable the necessary observations to be made. Passing through the centre of the cover there is a stirring apparatus, consisting of a tubular axis carrying three blades at the lower end, and furnished with a knob at the upper end

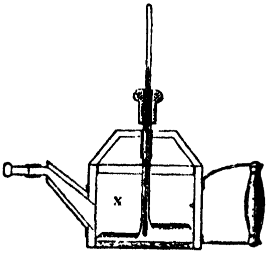

FIG. 75A.

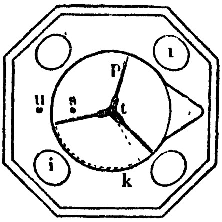

FIG. 76.

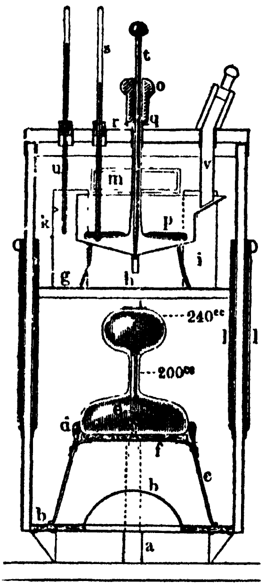

FIG. 77.

---

[1] *Technologic Paper,* No. 210, *of the U.S. Bureau of Standards* (1922), p. 243.

[2] For further particulars of the Engler viscometer and its modifications, see Holde, *Kohlenwasserstofföle und Fette* (1924), p. 20 *et seq.*

by which it is rotated to and fro; stops on the lid prevent it revolving more than one-third of a turn, and also prevent the blades from coming into contact with the bulb of the thermometer *s*. The plug-valve *t* passes through the axis of the stirrer, which can be lifted out of the oil and suspended by a projecting stud before the valve is raised. The stirrer is made in two parts, which can be easily separated for cleaning. The oil is poured into the cup through the tube *v*, having previously been heated to the required temperature in the double-walled can (fig. 75A), which is also provided with thermometer and stirrer.

Method of Experiment.—The flask is first placed upon the stand *c*; then the plate *g* and viscometer are put in their places and the cover is firmly fixed on, taking care that the marks on the plate, viscometer, and cover are opposite to the mark on the side of the oven. The outer thermometer *u* is placed with its bulb next to the viscometer, and the thermometer *s*, which registers the temperature of the oil, is pushed down until its bulb nearly reaches to the bottom of the cup. The tube *v* is inserted, the stirrer is lowered into the viscometer, and the jet is closed by means of the valve *t*. Having levelled the apparatus by means of the plumb-line at the side, heat is at first applied strongly, until about four-fifths of the desired rise of temperature has taken place, and then the flame is gradually lowered until the temperature is reached and remains constant. The outer thermometer *u* must alone be observed at this stage, as a layer of somewhat cooler air lies at the bottom of the oil-cup. Meanwhile the can *x*, having been filled with oil nearly up to the mark, is heated to the required temperature whilst the stirrer is rotated in the direction of the arrow-mark on the lid, and then the surface of the oil is adjusted to the mark exactly. When the temperature of the air in the oven is constant, and that of the oil in the can is from 0·25° to 0·5° higher, the oil is quickly poured down the tube *v*, the can being well drained, and the tube is then stoppered. Having made certain that the surface of the oil is level with all the studs on the viscometer, the stirrer is worked whilst the valve-rod is held firmly in position, and the temperature of the oil is finally adjusted. The stirrer is then lifted out of the oil and suspended by its stud, the valve rod is withdrawn, the hole being closed with a cork, and the number of seconds required to fill the flask up to the 200 c.c. mark is exactly noted.

Calibration.—This instrument is calibrated in the same manner as the Engler viscometer.

Doolittle's Torsion Viscometer.[1]—This instrument, which has been much used in American laboratories, was devised by O. S. Doolittle for use in the laboratory of the Pennsylvania and Reading Railroad Company. It was in constant use there for many years, and gave satisfactory results; it has, however, now been replaced by the Saybolt Universal Viscometer.

The apparatus (fig. 78) consists of a steel wire suspended from a firm support, and fastened to a stem which passes through a graduated horizontal disc, by means of which the torsion of the wire may be measured. The disc is adjusted so that the index points to zero when there is no torsion in the wire. A cylinder, 2 inches long by 1½ inches in diameter, having a slender stem by which to suspend it, is then immersed in the oil to be tested and fastened by a thumb-screw. The oil is surrounded by a bath of water or paraffin, according to the temperature at which the experiment is to be made. The temperature being adjusted whilst the disc rests upon its supports, the wire is twisted 360° by means of the knob at the top. The disc being released, the cylinder rotates in the oil, owing to the torsion of the wire. If there were no resistance to the movement, the momentum acquired by the cylinder

---

[1] *Jour. Amer. Chem. Soc.*, xv. (1893), pp. 173, 454.

and disc in revolving back to zero would carry them 360° in the opposite direction; but the resistance of the oil causes the revolution to fall short of 360°, and this resistance is stated to be directly proportional to the viscosity of the oil.

The simplest way in which the resistance may be measured is by observing the number of degrees of retardation between the first and second complete arcs traversed by the disc. Supposing, for example, that the wire be twisted 360° and the disc released. The first reading is taken at the end of the first swing; say 355·6° to the right. The disc is allowed to swing back to the left and no reading is taken, but the second reading is made at the end of the next swing to the right; say 338·2°. We thus have:

Right,	355·6°
Left,	
Right,	338·2°
Retardation,	17·4°

To avoid error, two tests are made, one by rotating the milled head to the left and the other to the right. If the instrument be in correct adjustment, the two results will be the same; but if it be slightly out of adjustment, the mean of the two will be the correct reading.

In order to overcome the variations in different instruments, each is standardised against pure cane-sugar solutions, and the viscosities of oils are expressed in terms of the number of grammes of pure cane sugar which, contained in 100 c.c. of the syrup at 60° F., will at 80° F. give the same retardation as the oil. Readings are obtained by making a number of solutions containing known amounts of pure cane sugar, and determining the retardation of each. A curve is then marked out on squared paper, the number of grammes of sugar in 100 c.c. of the different syrups being taken as abscissæ and the degrees of retardation as ordinates. From this curve the value of each degree of retardation in terms of cane sugar is interpolated, and the values, arranged in the form of a table, are furnished with each instrument.

One advantage of the torsion viscometer is that the observations are quite independent of the specific gravity of the liquid. Observations at high temperatures can be readily made, and a moderate amount of suspended matter in the oil does not affect the readings. It might be supposed that inertia effects would vitiate the results and become proportionally greater the less viscous the oil. In regard to this, R. Job wrote:[1] "We have spent a good deal of time in experimenting on the matter, and have found that the error due to this source is hardly measurable, owing to the fact that the wire is over 20 inches long and the cylinder head weighs over 5 lbs., while the cylinder itself is only 2 inches high and 1½ inches in diameter. Thus, we have comparatively

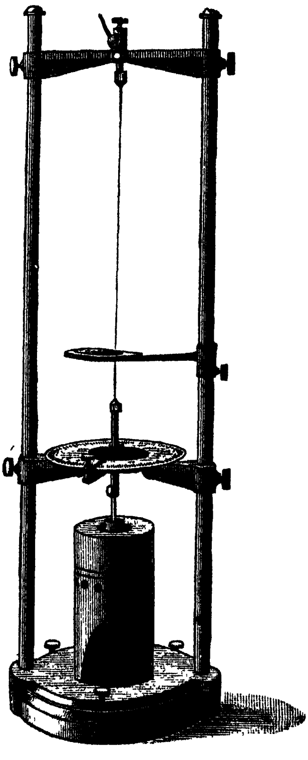

FIG. 78.

---

[1] Private communication prior to 1907.

slow movement with considerable momentum, so that the reading is practically unaffected by the slight movement of the solution." Job also states that after allowing the weight to remain suspended for a short time, no further stretching of the wire takes place.

The Michell Cup and Ball Viscometer.—This viscometer (see fig. 79) was designed for use in the workshop and is of very simple design. It consists of a cup of hardened steel or cast iron, formed in the end of a hollow steel stem or handle, the bore of which, for the reception of a thermometer, extends into the metal of the cup and to within a short distance of the concave surface. A steel ball, about ¾ inch in diameter, fits into the cup and is prevented from touching the surface by three tiny projections which project from the surface of the cup about $\frac{1}{1000}$ of an inch.

Fig. 79.

To use the apparatus, a few drops of the oil to be tested are placed in the cup, so that when the ball is placed in position the annular recess which surrounds the cup is completely filled. The whole is then inverted and the ball pressed firmly on a soft board until it is in contact with the projections in the cup, the instrument being held vertical by the knob of the handle so as to avoid heating by the hand. After a few seconds' pressure, the viscometer, still held vertical, is lifted an inch or so above the board, a stop-watch being started at the same moment, and the time taken by the ball to fall out of the cup is measured. This time in seconds, multiplied by a factor marked upon the instrument, gives the viscosity of the oil in C.G.S. units (poises) at the temperature of the test. The temperature of the oil is shown by a thermometer placed in the handle, sufficient of the oil being poured in to immerse the bulb.

T. C. Thomsen, who made a series of tests with this viscometer for the Lubrication Committee,[1] found it very fairly accurate if used in such a manner as to ensure that the whole instrument was at the same temperature as the oil film and this temperature correctly recorded, but that if these precautions were not taken, very inaccurate results were obtained. He used the instrument in two ways:

(1) The method as above described.

(2) The ball and cup were completely immersed in a vessel of the oil maintained at the required temperature, and allowed to remain in the oil until the temperature of the whole was uniform. The cup was then pressed on the ball, raised, and held suspended in the oil until the ball fell out, the time being recorded by a stop-watch.

This second method gave results which agreed well with the viscosities of the same oils determined by means of the Redwood viscometer in terms of absolute measure.

Conversion Tables.

Conversion factors for the Redwood, Saybolt Universal, and Engler Viscometers have been published by the U.S. Bureau of Standards. The latest figures, due to Herschel,[2] are given in Tables LXIII. to LXVI.

---

[1] *Report of the Lubricants and Lubrication Inquiry Committee*, 1920, pp. 103–110.

[2] *U.S. Bureau of Standards, Technologic Paper*, No. 210 (1922).

TABLE LXIII.—FACTORS FOR CONVERTING REDWOOD TIMES TO SAYBOLT UNIVERSAL TIMES OR ENGLER DEGREES.

Redwood Time in Seconds.	Factor for Saybolt Universal Time.	Factor for Engler Degree.	Redwood Time in Seconds.	Factor for Saybolt Universal Time.	Factor for Engler Degree.
30	1·08	0·0365	80	1·16	0·0349
32	1·09	0·0363	85	1·16	0·0349
34	1·09	0·0361	90	1·17	0·0348
36	1·10	0·0360	95	1·17	0·0348
38	1·10	0·0359	100	1·17	0·0348
40	1·11	0·0358	110	1·17	0·0347
42	1·11	0·0357	120	1·17	0·0347
44	1·12	0·0357	130	1·17	0·0347
46	1·12	0·0356	140	1·18	0·0347
48	1·13	0·0355	150	1·18	0·0347
50	1·13	0·0354	160	1·18	0·0346
55	1·14	0·0354	180	1·18	0·0346
60	1·14	0·0353	200	1·18	0·0346
65	1·15	0·0352	225	1·18	0·0346
70	1·15	0·0351	250	1·18	0·0345
75	1·16	0·0350			

TABLE LXIV.—FACTORS FOR CONVERTING SAYBOLT UNIVERSAL TIMES TO ENGLER DEGREES OR REDWOOD TIMES.

Saybolt Universal Time in Seconds.	Factor for Engler Degree.	Factor for Redwood Time.	Saybolt Universal Time in Seconds.	Factor for Engler Degree.	Factor for Redwood Time.
32	0·0337	0·928	85	0·0305	0·862
34	0·0334	0·920	90	0·0304	0·860
36	0·0332	0·914	95	0·0303	0·858
38	0·0330	0·909	100	0·0302	0·856
40	0·0328	0·905	110	0·0301	0·855
42	0·0326	0·901	120	0·0300	0·854
44	0·0324	0·897	130	0·0299	0·853
46	0·0322	0·893	140	0·0299	0·852
48	0·0319	0·889	160	0·0298	0·851
50	0·0317	0·885	180	0·0297	0·850
55	0·0315	0·881	200	0·0296	0·849
60	0·0313	0·871	225	0·0295	0·848
65	0·0312	0·873	250	0·0294	0·847
70	0·0310	0·870	300	0·0293	0·847
75	0·0308	0·867	350	0·0293	0·846
80	0·0307	0·865	400	0·0292	0·846

Table LXV.—Factors for converting Engler Degrees to Redwood Times or Saybolt Universal Times.

Engler Degrees.	Factor for Redwood Time.	Factor for Saybolt Universal Time.	Engler Degrees.	Factor for Redwood Time.	Factor for Saybolt Universal Time.
1·10	27·5	29·7	2·30	28·5	32·8
1·15	27·6	29·9	2·40	28·5	32·9
1·20	27·6	30·1	2·50	28·5	33·0
1·25	27·7	30·3	2·60	28·6	33·1
1·30	27·8	30·5	2·70	28·6	33·2
1·35	27·8	30·7	2·80	28·6	33·3
1·40	27·9	30·9	2·90	28·6	33·4
1·45	27·9	31·1	3·00	28·7	33·5
1·50	28·0	31·3	3·50	28·7	33·6
1·60	28·1	31·5	4·00	28·8	33·7
1·70	28·1	31·7	4·50	28·8	33·9
1·80	28·2	31·9	5·00	28·8	33·9
1·90	28·3	32·1	6·00	28·9	34·0
2·00	28·3	32·3	7·00	28·9	34·1
2·10	28·4	32·5	8·00	28·9	34·1
2·20	28·5	32·6	9·00	29·0	34·2

Table LXVI.—Factors for converting Engler Times to Redwood Times or Saybolt Universal Times.

Engler Time in Seconds.	Factor for Redwood Time.	Factor for Saybolt Universal Time.	Engler Time in Seconds.	Factor for Redwood Time.	Factor for Saybolt Universal. Time.
56	0·535	0·578	130	0·557	0·641
58	0·537	0·581	140	0·558	0·645
60	0·538	0·585	150	0·559	0·649
62	0·540	0·588	160	0·559	0·652
64	0·541	0·592	180	0·560	0·654
66	0·542	0·595	200	0·560	0·656
68	0·543	0·598	225	0·561	0·658
70	0·544	0·601	250	0·561	0·659
75	0·546	0·605	275	0·562	0·660
80	0·547	0·611	300	0·562	0·661
85	0·549	0·616	325	0·563	0·662
90	0·550	0·621	350	0·563	0·663
95	0·552	0·625	375	0·564	0·664
100	0·553	0·629	400	0·564	0·665
110	0·555	0·633	500	0·565	0·666
120	0·556	0·637	600	0·565	0·667

The Expression of Viscosity Values.

Although viscosity is a definite physical property of liquids, which can be accurately ascertained experimentally and expressed in absolute measure, it has been the custom commercially, ever since the introduction of mineral lubricating oils, to select either rape, olive, or some other fatty oil as a standard, and to compare the fluidities of mineral oils with it. From a practical point of view this method is recommended by its simplicity, and provided the viscosities of the oils which it is desired to compare do not fall below a certain limit, which in the case of Redwood's viscometer is about the viscosity of sperm oil at 60° F., the relative efflux times of the oils are very nearly proportional to their relative viscosities. It has, however, been pointed out that owing to the natural variation in viscosity of different samples of the same kind of oil, even when pure, and the much greater differences which may be caused by the use of an adulterated sample as a standard, a fatty oil is not a suitable standard to employ. To meet this objection, Redwood designed his standard viscometer, the principal dimensions of which are now fixed, and each instrument adjusted by a flow test in comparison with a Standard Reference Viscometer at the National Physical Laboratory, the results being expressed as the number of seconds required for the outflow of 50 c.c. at the temperature specified. The Saybolt Universal Viscometer, used in the United States, also has an oil tube of standard dimensions, but quite different from those of the Redwood instrument, and the results are expressed in seconds required for the outflow of 60 c.c. Engler's viscometer, used in Germany, is of fixed dimensions, and with it water is the standard of comparison; but the so-called "specific viscosities" ("Engler degrees," "Englergrade"), obtained by dividing the times of efflux of oils with that of water, are purely arbitrary numbers, and the same is true of Kunkler's viscosity numbers, which are referred to a standard mixture of glycerol and water of low viscosity, and of Doolittle's viscosity values, which are referred to cane-sugar solutions of known strength. Such arbitrary numbers may, nevertheless, be sufficient for specification purposes, provided the means of measuring them accurately, and with the certainty of common agreement, exists.

Notwithstanding the efforts which have been made to bring about uniformity in the measurement and expression of viscosity values, the results are far from satisfactory. Many of the "standard" viscometers in use are not of the standard dimensions, and the discordant results obtained with such instruments have been the cause of much dispute and trouble. The use of different standard instruments in different countries is a further cause of inconvenience. The only method which can lead to uniformity is the expression of all results in absolute units, and a consensus of opinion is forming in favour of this method. The British Engineering Standards Association have given a lead by issuing the Specification, referred to on p. 203, and have adopted the suggestion of Deeley and Parr[1] that the absolute C.G.S. unit of viscosity should be termed the "poise," and that where a smaller unit is more convenient the submultiple or "centipoise" should be used, as suggested by Bingham and Jackson. The Institution of Petroleum Technologists, also, have specified in their recently published (1924) **Standard Methods**, the expression of viscosity values in absolute units as an alternative to the method usually adopted, of merely giving the time of outflow in seconds. The centipoise is a very convenient unit for lubricating oils. The viscosity of water in C.G.S. units at 20° C. is almost exactly 1 (actually 1·005) centipoise; hence viscosities expressed in centipoises have the advantage of being the true specific viscosities, referred to water as unity at 20° C. (actually 20·2° C.), and they are independent of the type of viscometer used in determining them. Uniformity is also desirable as regards the temperatures at which viscosity values are determined. The Institution of Petroleum Technologists recommend that determinations shall be made at one or more of the following temperatures:

---

[1] *Phil. Mag.*, [6], **26** (1913), 85.

70°, 100°, 140°, 200°, 250° F. Saybolt viscosities are determined at 100°, 130°, or 210° F. It would be very convenient if the temperatures selected were such as can be expressed by whole numbers on both the Fahrenheit and Centigrade scales. The temperatures we suggest are:

Centigrade . . .	20°, 40°, 60°, 100°
Fahrenheit . . .	68°, 104°, 140°, 212°

The first two, or the first and third, are suitable for oils working at ordinary temperatures, and the third and fourth are suitable for cylinder oils. It is seldom worth while to determine viscosities at higher temperatures than 100° C. (212° F.), as the viscosity of most lubricating oils falls to such a low figure at this temperature that further rise of temperature does not greatly alter the difference between them. (Since the foregoing was written a paper by H. N. Mercer has been published,[1] giving viscosities of castor oil, sperm oil, two mineral lubricating oils, and paraffin wax at temperatures ranging from 100° to 250° C.)

The Calibration of Viscometers.—To yield results in absolute G.C.S. units (poises or centipoises), commercial viscometers must be calibrated with liquids of known viscosity, and we have suggested glycerol on account of the wide range of viscosities which can be obtained by mixing glycerol and water in varying proportions.[2] Glycerol is not an ideal standard liquid, because it is difficult to obtain chemically pure. The pharmaceutical quality is free from certain impurities, but may contain others, the presence of which would alter the relation between the specific gravity and viscosity given in the tables on pp. 193 to 199. The chief of these impurities are glycols, especially trimethylene glycol, which would lower the viscosity, and polyglycerols which would raise it. The glycerol used must, therefore, be carefully analysed to prove its chemical purity, and this should be done by a chemist who is an expert in glycerol analysis. A limited quantity of chemically pure glycerol has been put upon the market [3] containing 90 per cent. of pure glycerol and 10 per cent. of water, and further supplies of this would, no doubt, be forthcoming if a sufficient demand arose. There seems no reason why mixtures of higher viscosity should not also be made available. It has been objected that glycerol is hygroscopic, but we do not think this a serious objection to its use. Only the surface of the liquid is exposed to the air during the determination, and for a short time only. The same glycerol would not be used again, unless its specific gravity were redetermined. Bawtree has published a paper [4] recording some experiments with glycerol, showing that a structure forms in this liquid on standing, which is gradually broken down by repeated passage through a capillary tube and leads to erratic results in determining the viscosity. We have carefully experimented with glycerol of the same sp. gr. as used by Mr. Bawtree, but have been unable to obtain confirmation of his results. Doubt has been thrown upon the accuracy of the values in our tables, but we are not aware that anyone has taken the trouble to check our figures by fresh determinations with pure glycerol. We should welcome such work, and whilst we are quite prepared to find that our values need some correction, we have no reason to believe that those given in the present volume are seriously in error.

---

[1] *Jour. Soc. Chem. Ind.*, **45** (1926), 203T–205T.

[2] Bingham and Jackson have recommended ethyl alcohol-water mixtures and sucrose solutions, and have redetermined the viscosities of 20 and 40 per cent. solutions of pure sucrose, also the viscosity of a 60 per cent. solution, from 10° to 95° C. See "Standard Substances for the Calibration of Viscometers," *Scientific Papers of the Bureau of Standards*, No. 298, 1917.

[3] Hehner's pure glycerol, obtainable from Messrs Baird & Tatlock, London.

[4] *Jour. Oil and Colour Chemists' Association*, iii. (1920), p. 109.

The Calibration of Commercial Viscometers with Glycerol.—Mixtures of glycerol and water are prepared ranging in viscosity from about 0·05 to about 5 poises, a suitable series for the Redwood and Coleman-Archbutt viscometers being the following:—

TABLE LXVII.

Mixture No.	Glycerol per cent.	Specific Gravity at $\frac{20°}{20°}$ C.	Approximate Viscosity at 20° C. (Poises).
1	44 (approx.)	1·1129	0·045
2	56·6	1·1469	0·087
3	65·5	1·1712	0·158
4	70·0	1·1836	0·227
5	74·7	1·1963	0·355
6	79·7	1·2101	0·592
7	90·1	1·2381	2·41
8	94·0	1·2485	4·70

Mixtures approximating as nearly as possible to these are prepared by weighing and mixing together the required proportions of the purest commercial glycerin and water. The specific gravity of each fluid at $\frac{20°}{20°}$ C. is then carefully determined as directed on p. 240, and each fluid is run from the viscometer in succession at 20° C.,[1] the experiments being made in duplicate and the mean time taken. Care must be taken to prevent the absorption of water by the stronger glycerins. Finally, pure water is run from the viscometer at 20° C.

Of each fluid we now know—

1. The *viscosity* (η), in poises at 20° C., which is ascertained from Table LXI. on pp. 197-199.
2. The *time* (t), in seconds, required for the outflow of the standard volume (50 c.c. in the case of Redwood's viscometer) at 20° C.
3. The *density* (d), which is calculated by multiplying the sp. gr. at $\frac{20°}{20°}$ C. by 0·998259, the density of water at 20° C.

If the viscometer were perfect, that is to say if all the work done by the liquid in flowing out were used up in overcoming viscous resistance (a condition which is very nearly fulfilled in the case of a thick oil), then the corrected time (td) would be proportional to the viscosity; *i.e.*

$$ktd=\eta,$$

k being a factor the value of which could be ascertained by running a single fluid of known density and viscosity from the viscometer. But it will be found that the value of k deduced from each of the different fluids (including water) varies, greatly in the case of the thinner fluids, but only slightly with fluids above a certain viscosity, and by plotting the results a curve can be drawn from which the value of k for a fluid of any viscosity can be ascertained. Having constructed such a diagram for any viscometer, a multiplier is obtained by which the "td" of any oil, *i.e.* the time of efflux × the density at the temperature of efflux, may be converted into the viscosity of the oils in poises at the temperature of experiment.

---

[1] The standardising *must* be done at *exactly* 20° C., because that is the only temperature at which the values in the table of glycerol-water viscosities are correct.

TABLE LXVIII.—THE REDWOOD VISCOMETER.[1]

Number and Description of Fluid.	Viscosity at 20° C. η (Poises).	Time of Efflux at 20° C. t (seconds).	Density of Fluid at 20° C. d.	td.	$\eta \div td = k$.	Variation of k per cent.
1. Water, .	0·01028	26·0	0·99826	25·95	0·00040	- 83·3
2. Glycerol and water,	0·0377	33·4	1·0989	36·7	0·00103	- 56·9
3.	0·2360	87·2	1·1828	103·1	0·00229	- 4·2
4.	0·4984	174·7	1·2036	210·3	0·00237	- 0·8
5.	0·7504	259·5	1·2134	314·9	0·00238	- 0·4
6.	1·1123	383·7	1·2218	468·8	0·00237	- 0·8
7.	2·2674	772·7	1·2351	954·4	0·00238	- 0·4
8.	4·0356	1343·0	1·2440	1670·7	0·00242	+ 1·3
9.	8·8370	2900·0	1·2548	3638·9	0·00243	+ 1·7

TABLE LXIX.—THE COLEMAN-ARCHBUTT VISCOMETER.[1]

Number and Description of Fluid.	Viscosity at 20° C. η (Poises).	Time of Efflux at 20° C. t (seconds).	Density of Fluid at 20° C. d.	td.	$\eta \div td = k$.	Variation of k per cent.
			100 c.c.			
1. Water.	0·01028	28·10	0·998259	28·05	·00037	- 81·7
2. Glycerol and water.	0·0377	36·25	1·0989	39·8	·00095	- 53·0
3.	0·2338	104·6	1·1825	123·7	·00189	- 6·4
4.	0·4984	205·9	1·2036	247·8	·00201	- 0·5
5.	0·7504	303·1	1·2134	367·8	·00204	+ 1·0
6.	1·1123	446·2	1·2218	545·2	·00204	+ 1·0
7.	2·2674	913·8	1·2351	1128·6	·00201	- 0·5
8.	4·0356	1604·5	1·2440	1996·0	·00202	± 0·0
			50 c.c.			
2. Glycerol and water.	0·0377	22·05	1·0989	24·2	·00156	- 49·4
3.	0·2338	67·65	1·1825	80·0	·00292	- 5·2
4.	0·4984	135·15	1·2036	162·7	·00306	- 0·6
5.	0·7504	197·7	1·2134	239·9	·00313	+ 1·6
6.	1·1123	292·85	1·2218	357·8	·00311	+ 1·0
7.	2·2674	601·2	1·2351	742·5	·00305	- 1·0
8.	4·0356	1056·5	1·2440	1314·3	·00307	- 0·3
			25 c.c.			
2. Glycerol and water.	0·0377	12·7	1·0989	14·0	·00269	- 46·6
3.	0·2338	41·45	1·1825	49·0	·00477	- 5·4
4.	0·4984	82·95	1·2036	99·8	·00499	- 1·0
5.	0·7504	120·4	1·2134	146·1	·00514	+ 2·0
6.	1·1123	178·4	1·2218	218·0	·00510	+ 1·2
7.	2·2674	369·1	1·2351	455·9	·00497	- 1·4
8.	4·0356	648·5	1·2440	806·7	·00500	- 0·8
9.	8·8370	1396·0	1·2548	1751·7	·00504	± 0·0

---

[1] The figures in this table are reproduced from previous editions of this book, and have not been corrected to agree with the viscosity values in Table XLI of this edition. They are sufficiently correct to illustrate the method of calibration.

We give the results obtained by standardising in this manner two commercial viscometers (really four; since the Coleman-Archbutt viscometer may be regarded as three instruments of different capacities having a common jet). See Tables LXVIII. and LXIX. (p. 226).

From the results in these tables it appears that the mean values of *k* deduced from the efflux velocities of the fluids of 0·4984 poise viscosity and upwards might be used to calculate the viscosity in poises of all oils exceeding in value 0·49 poise, or we might say of all oils of not less viscosity than sperm oil at 60° F. (η=0·42 poise), with a maximum error, in the case of either instrument, of ±2 per cent. To enable the viscometers to be used for fluids of lower viscosity, such, *e.g.*, as rape oil at 150° F. (η=0·18 poise) or cylinder oils at 212° F. (η=0·16 to 0·36 poise), the results have been plotted on diagrams. Fig. 80 gives the complete curve for all liquids. Fig. 81 gives, on an enlarged scale, the first part of each curve for thin liquids.[1]

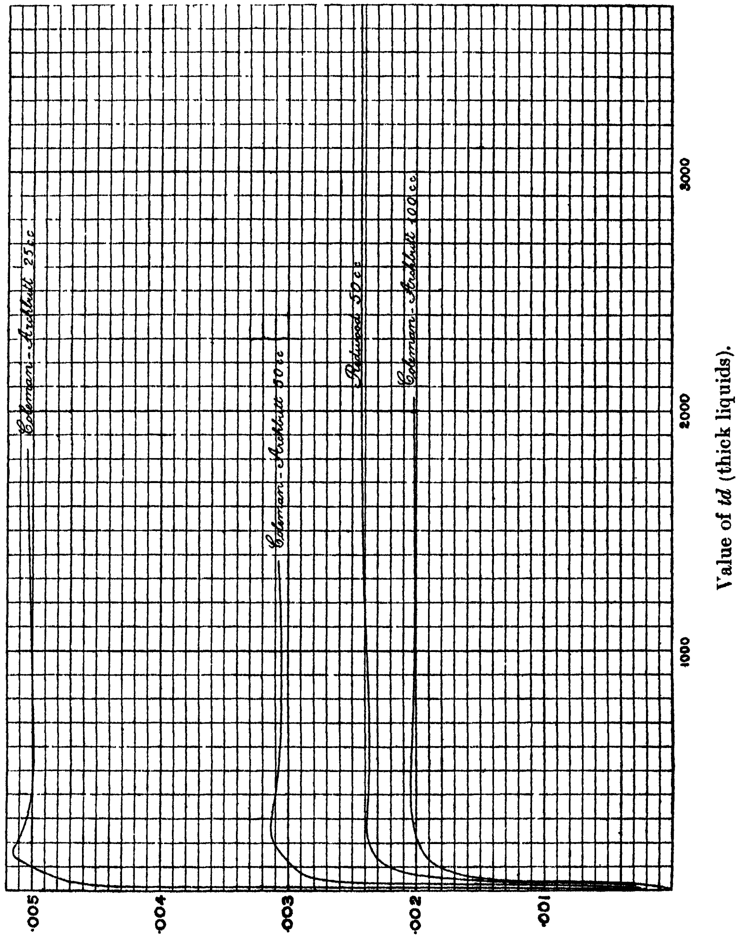

FIG. 80.—Correction Curve for the Coleman-Archbutt and Redwood Viscometers.

The success of this method of standardising depends upon the flow of liquid through the jet of the viscometer being free from eddying motion,

---

[1] These diagrams are, of course, applicable only to the particular instruments for which they were constructed.

and provided the length of the jet does not exceed twenty times its diameter steady motion may be relied upon in the case of liquids of not lower viscosity than 0·4 poise. With thinner liquids unsteady motion may occur, and the tendency to form eddies will be greater, *ceteris paribus*, the higher the density of the liquid and the lower its viscosity. That is to say, the comparatively heavy glycerol solutions used for standardising will be more likely to set up eddies than the lighter oils, and consequently the latter may flow more rapidly than glycerol solutions of equal viscosity. With both the viscometers tested by us this has been found to be the case, and the value of *k* corresponding to the *td* of thin oils is too small to give the true viscosity. If, however, the value of *k* corresponding to 1⅔*td* be taken, practically correct results are

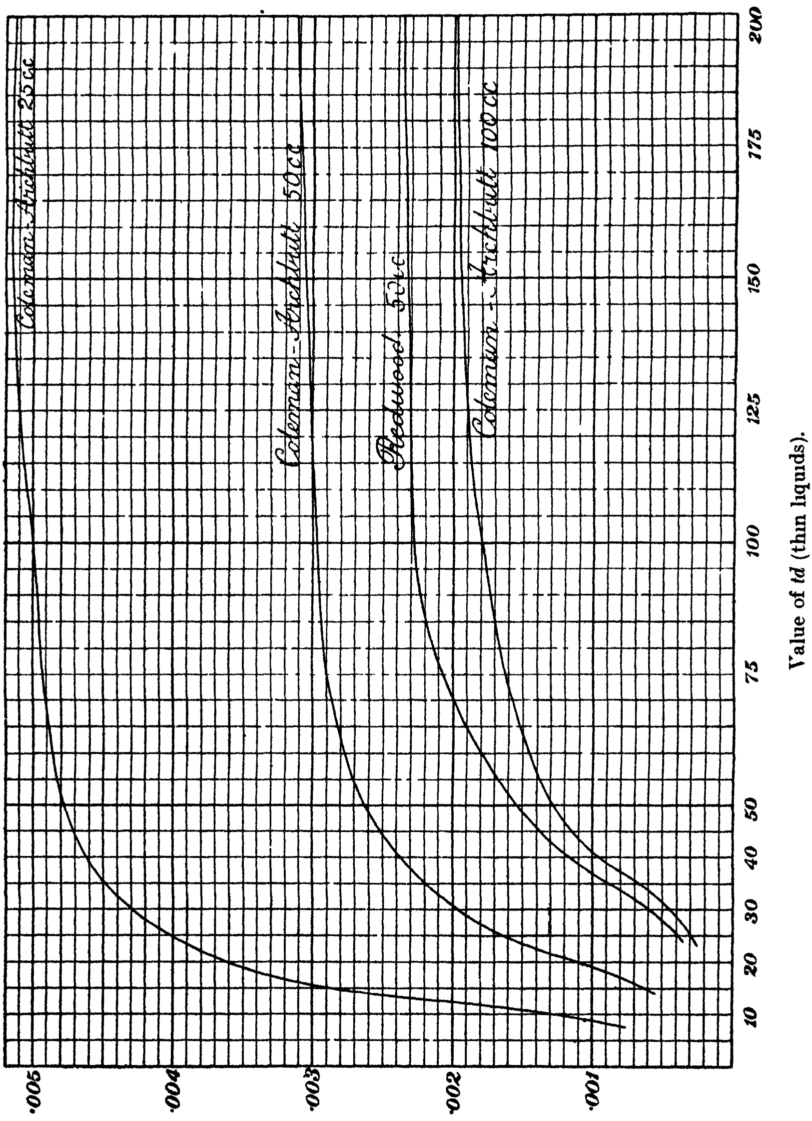

FIG. 81.—Correction Curve for the Coleman-Archbutt and Redwood Viscometers.

obtained, even with oils as thin as water. We, therefore, apply this correction to all thin oils. The following rules contain a summary of the method :—

RULES FOR DETERMINING BY MEANS OF A CALIBRATED VISCOMETER THE VISCOSITY OF A LUBRICATING OIL IN ABSOLUTE MEASURE AT ANY DESIRED TEMPERATURE.

A. For Oils of Viscosity 0·4 poise and upwards.

1*st. Determine the time of efflux* (*t*) *of the standard volume in seconds.*
2*nd. Determine the density* (*d*) *of the oil at the same temperature.*
3*rd. Find the value of k corresponding to td.*
4*th. Multiply td by k ; the product is the absolute viscosity in poises.*

B. For Oils of Lower Viscosity than 0·4 poise.

1*st and* 2*nd. As above.*
3*rd. Find the value of k corresponding to* $\frac{7td}{5}$.
4*th. Multiply td by k ; the product is the absolute viscosity in poises.*

The following results show the accuracy of which the method is capable. Oils of low viscosity were selected for experiment, as with these the error is likely to be greatest.

Description of Oil.	Density at 20° C.	Viscosity in Poises at 20° C., determined by means of the		
		Absolute Viscometer.	Redwood Viscometer.	Coleman Viscometer.
Mixture of shale oil and petroleum, . .	0·8265	0·040	0·040	0·042
Shale oil, ...	0·8653	0·124	0·123	0·122
Sperm oil, ...	0·8783	0·377	0·377	0·378

Fig. 82.—Light Machinery Oils.

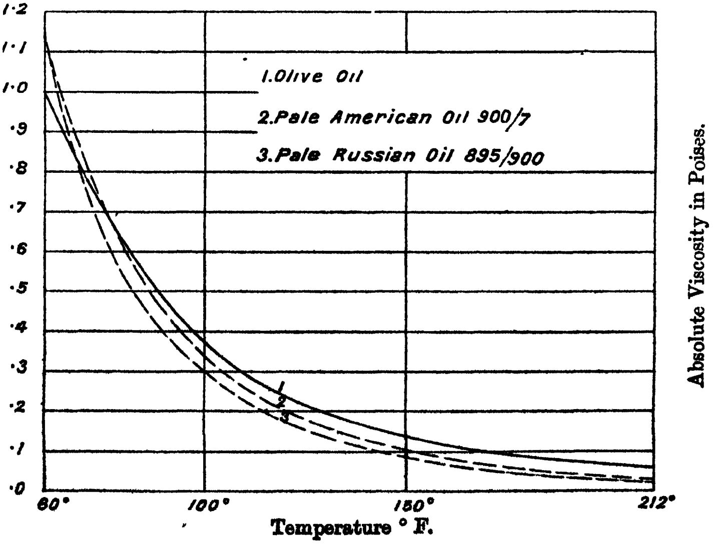

Tables LXX. and LXXI. contain the complete results obtained by testing in this manner a number of lubricating oils. Table LXXII. is a summary. The curves in figs. 82, 83, 84, 85 show the relation between absolute viscosity and temperature in the case of mineral lubricating oils, as compared with typical animal and vegetable oils.

TABLE LXX.--VISCOSITIES OF OILS IN POISES DETERMINED BY THE COLEMAN-ARCHBUTT VISCOMETER.

Description of Oil.	60° F.				
	Efflux Time (seconds) *t*.	Density *d*.	*td*.	*k*.	Viscosity η =*ktd*. (Poises).
Animal and Vegetable Oils.	100 c.c.				
Sperm oil, ...	240·4	·8783	211·1	·00199	0·420
Olive oil, ...	539·2	·9159	493·9	·00204	1·008
Rape oil, ...	598·6	·9151	547·8	·00204	1·118
Rape oil (another sample), . .	633·0	·9148	579·1	·00203	1·176
Tallow, ...	...	...	...	...	...
Castor oil, ...	...	...	...	...	...
Neutral wool fat, ...	...	...	...	...	...
Scotch Mineral Oils.					
'865,'	90·7	·8683	78·8	·00185	0·146
'890,'	284·4	·8905	253·3	·00201	0·509
Galician Mineral Oils.					
Light (pale) machinery oil, . .	215·0	·8885	191·0	·00203	0·388
Heavy (pale) machinery oil, . .	695·0	·8961	622·8	·00203	1·264
Russian Mineral Oils.					
Light machinery and spindle oil, .	631·3	·8978	566·8	·00204	1·156
Medium (pale) machinery oil, . .	1955·0	·9096	1778·3	·00202	3·592
	50 c.c.				
Heavy (pale) engine and machinery oil,	1838·0	·9085	1669·8	·00310	5·176
Heavy (dark) axle oil, ...	2152·0	·9093	1956·8	·00310	6·066
Extra heavy (pale) engine and machinery oil, ...	2186·0	·9085	1986·0	·00310	6·157
American Mineral Oils.	100 c.c.				
Spindle oil ('Pale 885'), . . .	256·2	·8844	226·6	·00200	0·453
,, ,, ('Pale 860/70'), . .	410·5	·8677	356·2	·00204	0·727
Light machinery oil ('900/7'), .	619·5	·9008	558·1	·00204	1·138
'Solar red' engine oil, . . .	1040·0	·9162	952·8	·00201	1·915
'Bayonne' engine oil, . . .	1185·6	·9113	1080·5	·00201	2·172
	50 c.c.				
'Queen's red' engine oil, . . .	1076·0	·9125	981·9	·00305	2·995
Medium (dark) machinery oil, . .	1130·0	·8839	998·8	·00305	3·046
'Galena' axle oil, ...	1555·0	·9086	1412·9	·00309	4·366
Heavy (pale) machinery oil, . .	2363·0	·9018	2131·0	·00310	6·606
Filtered cylinder oil ('Valvoline')	...	...	...	...	...
,, ,, ,, ('F.F.F.'), .	...	...	...	...	...
Dark cylinder oil ('A'), . . .	...	...	...	...	...
,, ,, ,, ('N'), . . .	..	...	...	...	...
,, ,, ,, ('Locomotive'), .	...	...	...	...	...
Dark filtered cylinder oil ('N'), .	...	...	...	...	...

TABLE LXX.—*continued.*

Description of Oil.	100° F.				
	Efflux Time (seconds) *t.*	Density. *d.*	*td.*	*k.*	Viscosity $\eta = ktd.$ (Poises).
Animal and Vegetable Oils.	100 c c.				
Sperm oil, ...	111·7	·8637	96·5	·00192	0·185
Olive oil, ...	208·2	·9011	187·6	·00201	0·377
Rape oil, ...	235·6	·9005	212·2	·00199	0·422
Rape oil (another sample) . .	249·0	·9002	224·1	·00200	0·448
Tallow, ...	...	...	...	...	...
Castor oil, ...	1433·0	·9473	1357·5	·00201	2·729
Neutral wool fat, ...	..	...	...	...	...
Scotch Mineral Oils.					
'865,'	52·0	·8533	44·4	·00148	0·066
'890,'	108·9	·8761	95·4	·00192	0·183
Galician Mineral Oils.					
Light (pale) machinery oil, . .	97·0	·8741	84·8	·00167	0·142
Heavy (pale) machinery oil, . .	205·0	·8822	180·9	·00189	0·342
Russian Mineral Oils.					
Light machinery and spindle oil, .	174·9	·8837	154·6	·00199	0·307
Medium (pale) machinery oil, . .	417·0	·8957	373·5	·00204	0·762
Heavy (pale) engine and machinery oil,	579·0	·8949	518·1	·00203	1·052
Heavy (dark) axle oil, ...	673·0	·8955	602·7	·00203	1·223
Extra heavy (pale) engine and machinery oil, ...	670·0	·8946	599·4	·00203	1·217
American Mineral Oils.	100 c.c.				
Spindle oil ('Pale 885'), ...	99·2	·8700	86·3	·00188	0·162
,, ,, ('Pale 860/70'), . .	141·0	·8535	120·3	·00196	0·236
Light machinery oil ('900/7'), .	193·0	·8867	171·1	·00200	0·342
'Solar red' engine oil, . . .	273·4	·9020	246·6	·00201	0·496
'Bayonne' engine oil, . . .	315·4	·8973	283·0	·00202	0·572
'Queen's red' engine oil, . . .	388·0	·8985	348·6	·00204	0·711
Medium (dark) machinery oil, . .	397·6	·8695	345·7	·00204	0·705
'Galena' axle oil, ...	498·0	·8946	445·5	·00204	0·909
Heavy (pale) machinery oil, . .	711·0	·8878	630·8	·00203	1·274
	50 c c.				
Filtered cylinder oil ('Valvoline'), .	901·0	·8757	788·9	·00305	2·406
	25 c.c.				
Filtered cylinder oil ('F.F.F.'), .	964·0	·8757	844·2	·00500	4·221
Dark cylinder oil ('A'), . . .	955·0	·8846	844·8	·00500	4·224
,, ,, ('N'), ...	1438·0	·8849	1272·5	·00503	6·401
,, ,, ('Locomotive'), .	1645·0	·8834	1453·2	·00504	7·324
Dark filtered cylinder oil ('N'), .	2219·0	·8950	1986·0	·00505	10·029
'Extra L.L.' cylinder oil, . .	2485·0	·8872	2204·7	·00506	11·156

TABLE LXX.—*continued.*

Description of Oil.	150 °F.				
	Efflux Time (seconds) t.	Density d.	td	k.	Viscosity n $=ktd$. (Poises)
Animal and Vegetable Oils.	100 c.c.				
Sperm oil, ...	62·1	·8455	52·5	·00161	0·085
Olive oil, ...	93·3	·8826	82·3	·00187	0·154
Rape oil, ...	105·2	·8822	92·8	·00191	0·177
Rape oil (another sample), . .	117·0	·8820	103·2	·00182	0·188
Tallow, ...	105·2	·8784	92·4	·00190	0·176
Castor oil, ...	321·2	·9284	298·2	·00203	0·605
Neutral wool fat, ...	906·0	·9137	827·8	·00202	1·672
Scotch Mineral Oils.					
'865,'	38·2	·8347	31·9	·00113	0·036
'890,'	54·8	·8581	47·0	·00146	0·069
Galician Mineral Oils.					
Light (pale) machinery oil, . .	...	...	...	...	...
Heavy (pale) machinery oil, . .	...	...	...	...	...
Russian Mineral Oils.					
Light machinery and spindle oil, .	67·9	·8661	58·8	·00168	0·099
Medium (pale) machinery oil, .	115·4	·8784	101·4	·00193	0·196
Heavy (pale) engine and machinery oil,	...		...	...	...
Heavy (dark) axle oil, ...	...	...	...	...	...
Extra heavy (pale) engine and machinery oil, ...	...	...	...	...	...
American Mineral Oils.					
Spindle oil ('Pale 885'), . .	52·2	·8521	44·5	·00148	0·066
,, ,, ('Pale 860/70'), . .	63·9	·8358	53·4	·00162	0·086
Light machinery oil ('900/7'), .	75·5	·8690	65·6	·00175	0·115
'Solar red' engine oil, . . .	91·9	·8843	81·3	·00185	0·150
'Bayonne' engine oil, . . .	103·5	·8797	91·1	·00190	0·173
'Queen's red' engine oil, . .	122·0	·8810	107·5	·00182	0·196
Medium (dark) machinery oil, .	127·0	·8514	108·1	·00194	0·210
'Galena' axle oil, ...	...	...	...	...	...
Heavy (pale) machinery oil, . .	...	...	...	...	...
Filtered cylinder oil ('Valvoline'), .	347·0	·8587	298·0	·00203	0·605
,, ,, ,, ('F.F.F.'), .	...	...	...	...	...
Dark cylinder oil ('A'), . .	471·4	·8666	408·5	·00204	0·838
,, ,, ,, ('N'), . .	...	...	...	...	...
,, ,, ,, ('Locomotive'), .	...	...	...	...	...
Dark filtered cylinder oil ('N'), .	...	...	...	...	...

TABLE LXX.—*concluded.*

Description of Oil.	212° F.				
	Efflux Time (seconds) t.	Density d.	td.	k.	Viscosity $\eta = ktd$. (Poises).
Animal and Vegetable Oils.	100 c.c.				
Sperm oil,	43·4	·8229	35·7	·00128	0·046
Olive oil,	53·6	·8596	46·1	·00151	0·070
Rape oil,	58·7	·8595	50·5	·00158	0·080
Rape oil (another sample),	73·0	·8593	62·7	·00135	0·085
Tallow,	58·0	·8557	49·6	·00157	0·078
Castor oil,	98·9	·9050	89·5	·00189	0·169
Neutral wool fat,	180·0	·8909	160·4	·00196	0·314
Scotch Mineral Oils.					
'865,'	...	...	...	...	...
'890,'	...	.	...	...	...
Galician Mineral Oils.					
Light (pale) machinery oil,	...	...	...	...	...
Heavy (pale) machinery oil,	...	...	...	...	...
Russian Mineral Oils.					
Light machinery and spindle oil,	41·0	·8442	34·6	·00124	0·043
Medium (pale) machinery oil,	51·8	·8568	44·4	·00148	0·066
Heavy (pale) engine and machinery oil,	...	...	. .	.	...
Heavy (dark) axle oil,	.	...	...	...	...
Extra heavy (pale) engine and machinery oil,	...	...	...	...	..
American Mineral Oils.					
Spindle oil ('Pale 885'),	36·8	·8298	30·5	·00107	0·033
,, ,, ('Pale 860/70'),	40·8	·8138	33·2	·00119	0·039
Light machinery oil ('900/7'),	43·8	·8469	37·1	·00132	0·049
'Solar red' engine oil,	47·5	·8624	41·0	·00142	0·058
'Bayonne' engine oil,	50·4	·8579	43·2	·00146	0·063
'Queen's red' engine oil,	67·0	·8593	57·6	·00122	0·070
Medium (dark) machinery oil,	59·1	·8291	49·0	·00156	0·076
'Galena' axle oil,	...	...	...	...	...
Heavy (pale) machinery oil,	...	...	...	...	...
Filtered cylinder oil ('Valvoline'),	116·0	·8377	97·2	·00192	0·187
,, ,, ,, ('F.F.F.'),	159·0	·8370	133·1	·00191	0·254
Dark cylinder oil ('A'),	145·0	·8441	122·4	·00196	0·240
,, ,, ,, ('N'),	173·0	·8454	146·3	·00193	0·282
,, ,, ,, ('Locomotive'),	202·0	·8439	170·5	·00200	0·341
Dark filtered cylinder oil ('N'),	208·0	·8555	177·9	·00200	0·356
'Extra L.L.' cylinder oil,	266·0	·8480	225·6	·00200	0·451

Fig. 83.—Heavy Machinery Oils.

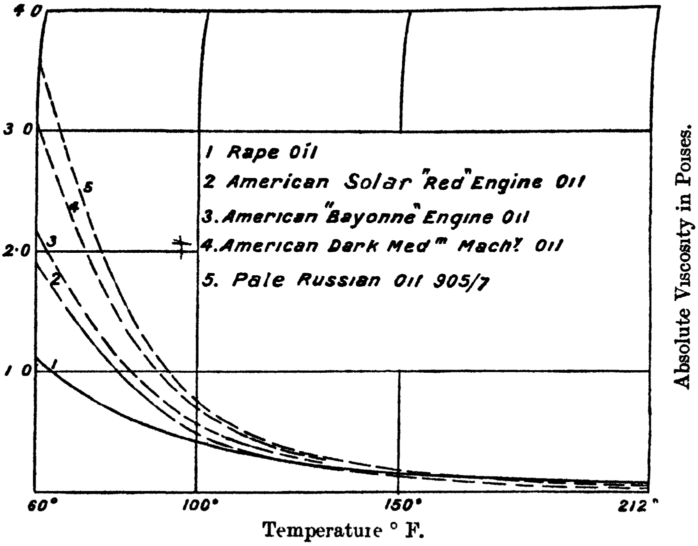

TABLE LXXI.—VISCOSITIES OF OILS IN POISES DETERMINED BY THE REDWOOD VISCOMETER.

Description of Oil	60° F				
	Efflux Time (seconds) t	Density d.	td	k.	Viscosity $n = ktd$ (Poises)
American Mineral Oils					
'Globe' oil (dark)	653·0	·8802	574·8	·00237	1·362
Light Machinery oil ('905/10') . . .	689·5	·9054	624·3	·00237	1·479
	100° F.				
American Mineral Oils.					
'Globe' oil (dark)	199·6	·8663	173·0	·00234	0·405
Light Machinery oil ('905/10')	200·2	·8915	178·5	·00235	0·419

TABLE LXXII.—ABSOLUTE VISCOSITIES OF OILS (SUMMARY).

Description of Oil, etc.	Absolute Viscosity (η) in Poises.			
	60° F.	100° F.	150° F.	212° F.
Water at 68° F. (20° C.),	0·01028			
Animal and Vegetable Oils.				
Sperm oil,	0·420	0·185	0·085	0·046
Olive oil,	1·008	0·377	0·154	0·070
Rape oil,	1·118	0·422	0·177	0·080
Rape oil (another sample),	1·176	0·448	0·188	0·085
Tallow,	...	...	0·176	0·078
Castor oil,	...	2·729	0·605	0·169
Neutral wool fat,	...	...	1·672	0·314
Scotch Mineral Oils.				
'865,'	0·146	0·066	0·036	...
'890,'	0·509	0·183	0·069	...
Galician Mineral Oils.				
Light (pale) machinery oil,	0·388	0·142	...	...
Heavy (pale) machinery oil,	1·264	0·342	...	...
Russian Mineral Oils.				
Light machinery and spindle oil,	1·156	0·307	0·099	0·043
Medium (pale) machinery oil,	3·592	0·762	0·196	0·066
Heavy (pale) engine and machinery oil,	5·176	1·052	...	...
Heavy (dark) axle oil,	6·066	1 223	...	...
Extra heavy (pale) engine and machinery oil,	6·157	1·217	...	...
American Mineral Oils.				
Spindle oil ('Pale 885'),	0·453	0·162	0·066	0·033
,, ,, ('Pale 860/70'),	0·727	0·236	0·086	0·039
Light machinery oil ('900/7'),	1·138	0·342	0·115	0·049
'Globe' oil (dark),	1·362	0·405	...	...
Light machinery oil ('905/10'),	1·479	0·419	...	...
'Solar red' engine oil,	1·915	0·496	0·150	0·058
'Bayonne' engine oil,	2·172	0·572	0·173	0·063
'Queen's red' engine oil,	2·995	0·711	0·196	0·070
Medium (dark) machinery oil,	3·046	0·705	0·210	0·076
'Galena' axle oil,	4·366	0·909	...	...
Heavy (pale) machinery oil,	6·606	1·274	...	...
Filtered cylinder oil ('Valvoline'),	...	2·406	0·605	0·187
,, ,, ,, ('F.F.F.'),	...	4·221	...	0·254
Dark cylinder oil ('A'),	...	4·224	0·833	0·240
,, ,, ,, ('N'),	...	6·401	...	0·282
,, ,, ,, ('Locomotive'),	...	7·324	...	0·341
Dark filtered cylinder oil ('N'),	...	10·029	...	0·356
'Extra L.L.' cylinder oil,	...	11·156	...	0·451

Pullen and Finlay[1] *have constructed a diagram the ordinates of which* are the logs of the temperature, and the abscissæ the logs of the reciprocals of the viscosity, and it was found that with each oil the plotted points lay on a line, or two intersecting straight lines. The "absolute viscosities" were obtained with a Redwood viscometer, and the authors do not state what corrections they made in the readings. It may be that the reason why the plottings for thin oils at high temperatures do not fall on one straight line is that the viscosities are not really absolute figures as suggested.

FIG. 84.—Spindle Oils.

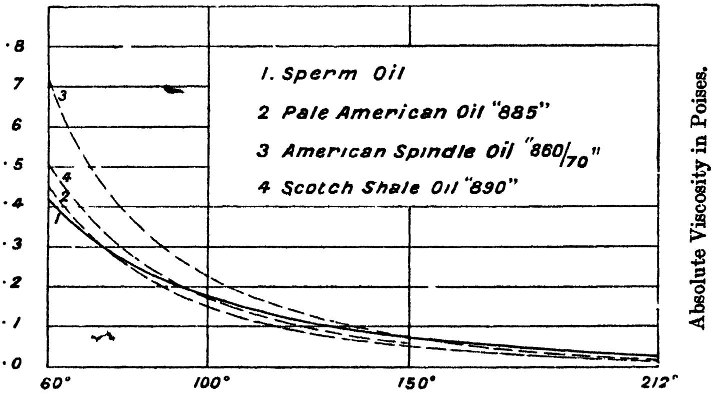

Temperature ° F.

FIG. 85.—Cylinder Oils.

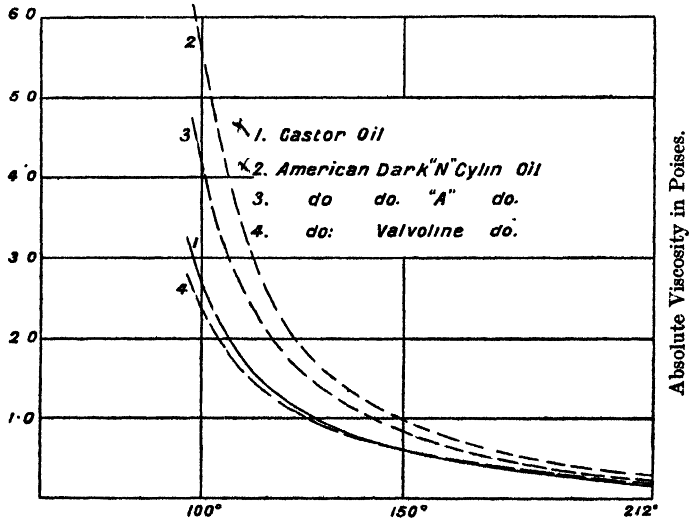

Temperature ° F.

---

[1] *Proc. Inst. Mech. Eng.*, 1909, p. 498.

Apparatus for Determining the Consistence of Solid Fats and Greases.

Kissling's Apparatus, shown in fig. 86, is constructed and used as follows:—

An aluminium rod A, 300 mm. long by 9 mm. diameter, is tapered at the lower end, through a length of 55 mm., to a point, and is attached at the upper end to a brass disc D, in the underside of which is fixed a stud S, 10 mm. long, and in the centre of the upper side a pin P, 40 mm. long. The rod and disc weigh 50 grms., and four additional weights are provided weighing, respectively, 25, 50, 100, and 200 grms., which are perforated and can be slipped over the pin P so as to rest upon the disc D. The rod slides freely and smoothly through a central hole in the adjustable ring R.

A beaker B is carefully filled to a depth of 125 mm. with the fat or grease at a temperature of 20° C., without entrapping any air bubbles, and is then fixed in such a position that when the point of the rod A is just touching the surface of the grease, the point of the stud S is exactly 100 mm. above the upper surface of the ring R. The rod is then allowed to sink into the grease, and the time occupied in sinking until the stud touches the ring is measured by a stop-watch. The rod is weighted, if necessary, so that the time occupied in sinking is not less than 20 and not more than 100 seconds.

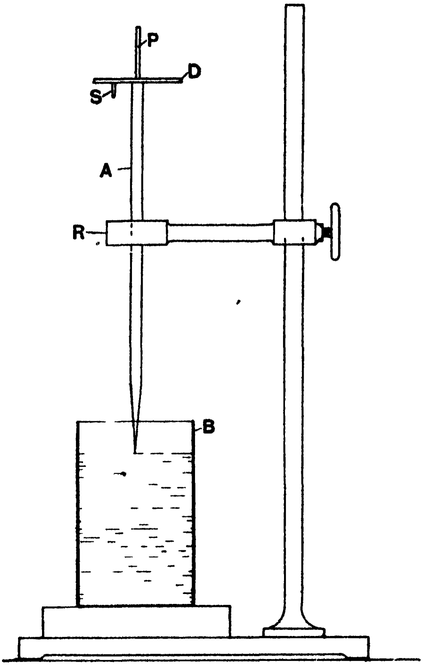

FIG. 86.

Kissling's Empirical "*Consistency Number*", K, is given by the formula $K=\frac{w+t}{10}$, where w=half the total weight and t=the time in seconds $\div f$, the value of f being found by reference to Table LXXIII.

TABLE LXXIII.

Data.	1.	2	3.	4.	5.	6.	7.	8.	9.
Weight of rod, grms.,	50	50	50	50	50	50	50	50	50
Added weight, „	nil	25	50	100	150	200	250	300	350
Total weight, „	50	75	100	150	200	250	300	350	400
Value of w, . .	25	38	50	75	100	125	150	175	200
Factor f, . .	20	10	5	4	3	2	1·5	1	1
Consistency number,	3 and under	3–5	4–7	7–10	10–13	13–17	17–22	22–28	over 28

It seems desirable that the beaker should be allowed to stand for some hours at 20° C. after being filled with the fat or grease before the test is made. A number of tests should be made and the mean taken. Holde remarks[1] that the weakness of the method consists in the difficulty of filling the fat or grease uniformly into the test vessel, besides which, isolated hard particles may cause serious errors.

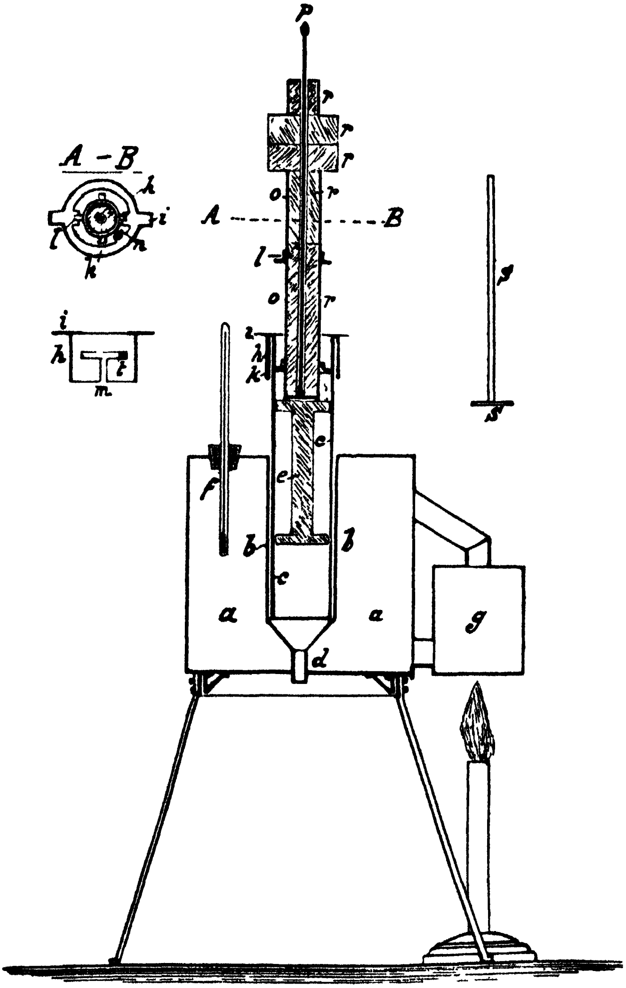

Fig. 87.

Kunkler's Apparatus is shown in fig. 87. It is made of sheet brass, and the temperature of testing is 50° C. In the water-bath *a*, the temperature of which is maintained by applying heat to the vessel *g*, and registered by means of the thermometer *f*, the vertical tube *b* is fixed, terminating in the jet *d*, 6 mm. wide and 15 mm. long. The tube *c*, 30 mm. wide and 150 mm. long, which contains the fat or grease, slides within the tube *b*, and the grease is forced out of this tube, through the jet *d*, by means of the piston *e*, 75 mm.

---

[1] *Kohlenwasserstofföle und Fette* (1924), p. 282.

in length, consisting of two discs, 29 mm. in diameter, and a connecting piece.

The tube *o*, forming an upward continuation of the piston, is kept in position by a projecting strip which slides in the groove *n*, on the inside of the tube *c*. A cap *h*, the movement of which is restricted by the pin *t*, working in the slot *m*, fits over the upper end of the tube *c*, and acts as a stop for the brackets *k* and *l*, by which the movement of the piston is arrested. The brackets *k*, which rest upon the cap before the experiment is commenced, are set free by turning the cap to the right; the piston then commences to descend, and continues to fall until the second pair of brackets *l* rests upon the cap, when the experiment is at an end and the time is noted. The distance between the two pairs of brackets is 55 mm. The piston is loaded with the whole or a portion of the lead weights *r*, three of 200 grammes, one of 100 grammes, and one of fifty grammes, according to the consistence of the grease. The weights are kept in position by the rod and disc *p*. The weight of the piston and rod is 170 grammes.

In using this apparatus, the tube *c* is filled with the grease to be tested by first inserting the piston *e* and spreading the grease with a broad knife upon the disc *b*, and, whilst spreading more and more grease, gradually withdrawing the piston until the upper disc reaches the open end of the tube. Great care must be taken that no air-bubbles are included. After pressing down the grease with the rod and disc *s*, the piston may be withdrawn and another tube filled, as, owing to the extent to which the consistency of grease is affected by working it about, the tube after filling must remain for at least twenty-four hours at a temperature of about 20° C. before the test is made. The water-bath is then filled nearly full of water at 55° C., and this temperature is maintained constant during the test. The tube of grease having been inserted into the fixed tube *b*, the piston is put in and pressed down until the stop *k* rests upon the cap. After the lapse of twenty minutes, the suitably loaded piston is liberated by turning the cap, and the time which elapses before its movement is arrested by the stops *l* measures the consistency of the grease.

This apparatus is intended for comparing the consistency of one sample of grease with another, or of several samples with a standard, and the load put upon the piston must depend upon the consistency of the grease. It should be so proportioned that the time of experiment with the stiffest sample is about ten minutes. It is obvious that the load must be the same for all samples compared, as the results of tests made with different loads do not admit of comparison.

B.—SPECIFIC GRAVITY AND DENSITY.

The specific gravity of a solid or liquid substance is the weight compared with that of an equal volume of water taken as unity. Unless otherwise stated, the comparison is made with water at the same temperature as the substance, but such an expression as "sp. gr. at $\frac{20^\circ}{4^\circ}$," means the weight of the substance at 20° compared with water at 4° taken as unity. In the C.G.S. system of units, the specific gravity at $\frac{20^\circ}{4^\circ}$ C. is identical with the *density* of the substance at 20° C.[1]

The specific gravities of the vegetable and animal oils and fluid waxes at 60° F. (15·5° C.) range from about 0·879 in the case of sperm oil, to about

---

[1] See Tait, *Properties of Matter*, third edition, p. 30.

0·968 in that of castor oil, and although individual specimens of each description of oil are liable to vary somewhat in specific gravity, the limits of variation for each of the principal kinds of oil are not wide and are pretty well known. Hence, a knowledge of the specific gravity of an animal or vegetable oil is valuable, both as a means of identification and also in judging of the purity of a particular specimen.

Mineral lubricating oils may also be classified according to their specific gravities (see p. 251), although this property is of secondary importance in relation to their lubricating value. It is, however, of great importance in distinguishing between mineral oils on the one hand and rosin and coal-tar oils on the other. Low specific gravity in conjunction with good demulsibility, is a desirable characteristic of oils used for turbines and enclosed-type steam engines.

Determination of Specific Gravity.[1]—Practically three methods are in use for determining the specific gravity of liquids, viz.: 1. *By pyknometers.* 2. *By the specific gravity balance.* 3. *By hydrometers.* The first method is applicable to all liquids, however viscous, and is, therefore, the most suitable for lubricating oils. The two last methods are adapted only for liquids of very moderate viscosity, and their applicability to lubricating oils is, therefore, limited.

The term "pyknometer" includes any vessel in which an accurately measured volume of a liquid can be weighed; the kinds in common use are the various forms of specific gravity bottle and the Sprengel tube. Of the former, the plain form, with an accurately ground, finely perforated stopper, is most useful for determining the specific gravities of lubricating oils at ordinary temperatures; for higher temperatures, and for limited quantities of material, the Sprengel tube is more convenient and accurate.

Bottle Method.—The specific gravity bottle with perforated stopper is shown in fig. 88. It can be obtained of various sizes, but the most suitable for our purpose holds, nominally, 25 grammes of water at 60° F. The capacity marked on the bottle must not be accepted without verification, but the bottle must be calibrated by ascertaining its weight when empty, and when filled with recently boiled distilled water at 60° F.

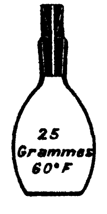

FIG. 88.

To calibrate the bottle.—The bottle before being weighed must first be thoroughly cleaned, rinsed with water, alcohol, and ether in succession, then warmed, and dried by aspirating a current of air to displace the ether vapour. The bottle should not be strongly heated. The stopper, also cleaned and dried, is inserted; the bottle is allowed to stand in a cool place for ten or fifteen minutes, then wiped with a clean soft rag and immediately weighed. Some pure distilled water is next boiled vigorously for about five minutes in a platinum or silver vessel, rapidly cooled to 60° F., and carefully poured into the bottle, avoiding the introduction of air bubbles. The bottle is immediately immersed up to the neck in a capacious basin of water at exactly 60° F., and is allowed to stand at this temperature for a few minutes, the water in the basin being frequently stirred with the thermometer and maintained constant in temperature. The stopper is then inserted in the bottle, well bedded into its seat, and the surplus water which has exuded through the perforation wiped off. If, now, the temperature of the water is the same inside and outside the bottle, the capillary in the stopper will remain exactly full, and there will be neither contraction nor exudation of water. When this is the case, the bottle is lifted

---

[1] For particulars of the I.P.T. Standard Method of determining the specific gravity of lubricating oils, with detailed specifications of hydrometers, see *Standard Methods of Testing Petroleum and its Products*, published by the Institution of Petroleum Technologists, 1924.

out of the water in the basin, and slowly immersed [1] in water several degrees colder, which will cause the water in the bottle to contract and empty the capillary; the outside of the bottle can now be wiped quite dry and weighed before the water has time to expand and exude from the stopper. Duplicate weighings, if carefully made in the manner directed, will not differ by more than two- or three-tenths of a milligramme. At least two weighings should be made. The bottle is then dried and again weighed empty. The weight should not differ from the previous weight of the empty bottle by more than 0·5 milligramme. The difference between the mean weight of the bottle when full and empty is the *water capacity of the bottle at* 60° *F.* This seldom needs to be redetermined; but the empty bottle should be frequently reweighed, as it may become scratched or chipped in use.

To determine the specific gravity of oil at 60° *F.*—About 50 c.c. of the oil are poured into a small lipped beaker, stirred with a thermometer, most carefully avoiding the introduction of air bubbles, and brought to exactly 60° F. by immersing the beaker in water 2 or 3 degrees above or below that temperature. The bottle is then filled quite full of the oil, without introducing any air bubbles. immersed up to the neck in water at 60° F., the stopper loosely inserted, causing the excess of oil to overflow into the basin, and then, after waiting about five minutes, bedded firmly into its place, the excess of oil being wiped off the top of the stopper. Having ascertained that the temperature is correct, and that the oil is neither expanding nor contracting, the bottle is cooled, wiped clean and dry, and weighed, exactly as in calibrating the bottle with water. By subtracting from the total weight the tare of the empty bottle, and then dividing the difference by the water capacity of the bottle, the specific gravity of the oil at 60° F. is obtained. The thermometer used must be verified by comparison with a standard instrument.

Glycerol and very viscous liquids which cannot be poured into the narrow neck of the bottle may be manipulated as follows: The jet is cut off a 30-c.c. pipette, making the delivery nozzle the full bore of the tube, and the dry pipette is filled with the liquid. The nozzle of the pipette, having been wiped outside, is then inserted into the specific gravity bottle nearly to the bottom, and the liquid is allowed to quietly flow out. In this way the bottle may be easily filled without the introduction of a single air bubble. The bottle, whilst being filled, is held down in water at the required temperature, and, when full, the stopper is inserted, and the bottle is allowed to stand in the water at constant temperature until expansion or contraction has ceased. The excess of fluid is then removed from the stopper, the bottle is cooled, wiped clean and dry, and weighed.

Sprengel Tube Method.—Sprengel's very useful pyknometer has the form of an elongated U, the arms of which terminate in two capillary tubes which are bent at right angles in opposite directions. One of the capillary tubes has a very fine bore and is drawn down to a point, the other has a wider bore, about 0·5 mm. in diameter, and is not drawn down.

In filling the tube, a small glass bulb, with a piece of narrow rubber tubing attached to it, is fixed on to the narrower capillary by means of a perforated rubber stopper, and the wider capillary is dipped into the oil, which is then drawn into the tube by suction applied to the rubber tube, the glass bulb serving as a vacuum chamber. This is the method described by Sprengel,[2] but with liquids of moderate viscosity the glass bulb may be dispensed with, and viscous liquids can usually be reduced in viscosity by warming, so as to

---

[1] Rapid immersion, by causing the bottle to contract first, expels some liquid from the stopper.

[2] *Jour. Chem. Soc.*, 1873, p. 577.

be easily drawn into the tube. When full, the tube is detached from the bulb and suspended in a beaker of water, as shown in fig. 89, and the temperature of the water is maintained constant, with frequent stirring, until the liquid has ceased to expand or contract. It is most convenient to arrange the temperature of the liquid in the tube so that it shall expand, and the liquid is absorbed by a strip of filter paper until it ceases to exude from the capillary orifice. The tube is then lifted out of the water by means of a small brass wire hook, and immersed for a short time in colder water, so as to contract the liquid and empty the capillaries. It is then wiped and weighed.

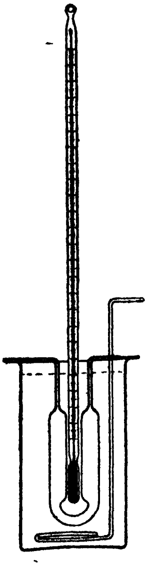

Fig. 89.

The movement of the liquid in expanding or contracting takes place, as a rule, entirely through the wider capillary, where there is least resistance. The narrower capillary, when full, generally remains so, and no liquid is expelled from it unless expansion occurs very rapidly. If it is necessary to introduce liquid into the pyknometer, owing to contraction having occurred, a drop in the end of a glass tube applied to the point of the narrow capillary will be drawn in.

The water capacity of this pyknometer is determined as in the case of the bottle, and having been done with great care need seldom be redetermined, but the empty tube should be reweighed occasionally.

At 212° *F.* (=100° *C.*).—For determining the sp. gr. of oils at the boiling-point of water, which for all practical purposes may be assumed to be 212° F., the neck of a 40-oz. flask is cut down as shown in fig. 90, and two opposite nicks are filed in the neck to receive the arms of the Sprengel tube. The flask is filled to the depth of about two inches with hot water, a few fragments of pumice are thrown in, and the water is made to boil vigorously. The filled Sprengel tube is then suspended in the steam, and the open neck of the flask is covered by a watch-glass. As soon as oil is no longer expelled from the tube, the ends of the capillary arms are wiped with filter paper and the tube is lifted out of the steam, cooled by immersion in cold water, wiped and weighed. This is the most convenient method of determining the specific gravities of fatty acids and fats which are solid at the ordinary temperature.

Sprengel tubes may be made to hold as little as 1 c.c., and, with care, the results obtained with a delicate balance are surprisingly accurate. Such small tubes are sometimes useful for determining the specific gravity of the small quantities of fatty acids obtained by saponifying mixed oils in the process of analysis. Sprengel pyknometers are specially adapted for work with hot liquids, as they need not, like bottles, be handled, and their shape causes the temperature of the contained liquid to become quickly adjusted. The movement of the liquid in the delicate capillary tubes indicates the slightest variation of temperature. The only drawback is the tedious nature of the filling and emptying operations with viscous liquids, but this may be largely overcome by warming the liquid so as to reduce the viscosity.

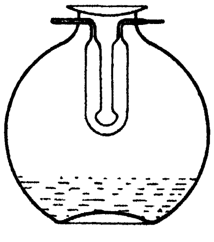

Fig. 90.

Westphal Balance Method.—The Westphal specific gravity balance (fig. 91) is an instrument of the steelyard type, constructed to indicate the specific gravity of a liquid by the relative loss of weight of a plummet of known displacement when suspended in the liquid. The complete instrument consists of the balance proper, the glass thermometer-plummet, the immersion cylinder, and two exactly similar sets of four rider weights, the largest rider of each set having the same weight as the water which the plummet displaces at 60° F., the next rider having one-tenth of this weight, the third one-hundredth, and the fourth one-thousandth. The beam is divided by notches into ten exactly equal parts, the notches being points of suspension for the riders and numbered consecutively from 1 to 9.

The balance is set up in a place free from draughts, and is adjusted by means of the levelling screw in the foot, so that when the beam is oscillating with the plummet suspended in air the index finger at the short end of the beam will come to rest exactly opposite to the fixed point. If the plummet be now suspended in water at 60° F., assuming that the instrument is intended for use at that temperature, equilibrium will be exactly restored by suspending one of the largest riders from the same hook as the plummet, indicating a specific gravity of 1. But if the liquid be of specific gravity 0·90, equilibrium will be restored by suspending the same rider from notch No. 9 ; if the specific gravity be 0·92, the next largest rider also must be suspended from notch No. 2 ; if the specific gravity be 0·922, the third rider must be hung from the second ; and if the specific gravity be 0·9225, the smallest rider must be hung from notch No. 5. Thus, the specific gravity of any liquid is shown at a glance to four decimal places by the positions of the riders on the beam, the largest rider giving the first decimal place and the other riders the remaining places in order.

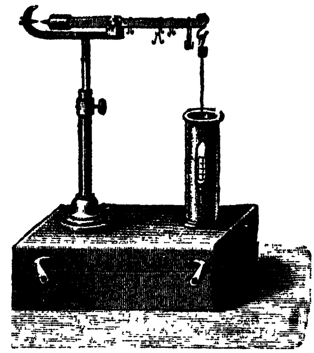

FIG. 91.

Every instrument purchased must, before use, be verified by measuring carefully the distances between the fixed points along the beam, which should not vary more than $\frac{1}{1000}$ part. The plummet must also be weighed in air and in water at 60° F., on a good ordinary balance indicating 1 mg., and the water displaced by the plummet must weigh the same as the largest rider of each set, the other riders varying in decimal proportion. The following table by Stock shows the variations met with in the riders of a Westphal balance by a good maker, the numbers in the third column showing that the maximum deviation from unity did not exceed 1 unit in the fourth decimal place, which is a satisfactory agreement.

TABLE LXXIV.—SHOWING VARIATIONS IN RIDERS.

Rider Number.	Weight in Air. Grammes.	Relation to Unity. Plummet Displacement=6·48 Grammes.
1	6·4806	1·00007
1*a*	6·4796	·99992
2	·6482	·10003
2*a*	·6483	·10004
3	·0655	·01010
3*a*	·0655	·01010
4	·0070	·00108
4*a*	·0071	·00109

With a well-made instrument, the probable error of a specific gravity determination will not exceed two or three points in the fourth decimal place with a liquid of low viscosity, such as water or even sperm oil, but the viscosities of most lubricating oils at ordinary temperatures oppose so much resistance to the movement of the plummet that the probable error becomes much greater. At sufficiently elevated temperatures the viscosities of oils become so much reduced that the Westphal balance may be used for both oils and fats, provided proper allowance be made for the expansion of the plummet. To determine the sp. gr. of a melted fat at $\frac{100^\circ}{100^\circ}$ C., for example, with an instrument constructed for use at some other temperature, we may proceed in the following manner: First determine by means of the balance the apparent sp. gr. of water at 100° C., $=x$, and then the apparent sp. gr. of the oil at 100° C., $=y$; then $\frac{y}{x}$, with the appropriate correction for vacuo added on (p. 245), is the true sp. gr. of the oil at 100° C. This result $\times$ 0·95866 (the density of water at 100° C.) is the density of the oil at $\frac{100^\circ}{4^\circ}$ C. Fig. 92 shows Carter Bell's method of using the balance for determinations at 100° C., D being a glass tube containing the oil or melted fat, C a bath of paraffin-wax, and B the water-jacket. The tube for the escape of steam should be prolonged upwards, well above the beam of the balance. A special plummet may be required, as the thermometer of the ordinary plummet has only a limited range.

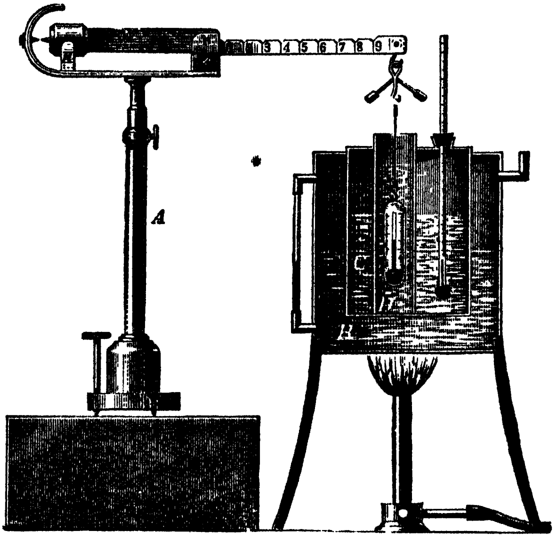

Fig. 92.

Hydrometer Method.[1]—Of all methods for ascertaining the specific gravities of liquids this is the most rapid, and provided the instrument used is correctly graduated, or its error exactly known, very accurate results may be obtained by it with liquids of low viscosity. But no hydrometer can be depended upon unless it has been tested by floating it in two or more liquids of which the specific gravities have been determined by means of the pyknometer. From

---

[1] See footnote on p. 240.

the differences (if any) between the true and observed values, a table of errors may be constructed for any fairly good instrument, by which the readings may be corrected. When the viscosity of the liquid is great enough to seriously impede the free movement of the hydrometer, as is the case with most lubricating oils at ordinary temperatures, the probable error of the method is greatly increased, and in such cases the hydrometer should only be used where speed is of chief importance and accuracy a secondary matter.

Hydrometers may be divided into two classes, viz. those giving specific gravities directly, and those graduated with arbitrary scales. Hydrometers of the former class may be purchased of almost any size and range, and all hydrometers must be used at the temperature for which they have been constructed.

A large number of instruments having arbitrary scales are in use. One of the most common is Lefebre's oleometer. It is intended for use at 15° C. The stem is graduated in degrees, numbered from 1 to 38, and opposite some of them are the names of certain oils. If immersed in rape oil, it will sink to the 15th degree, against which the name rape oil appears; in linseed oil it will sink to the 35th degree; and so on. These numbers, increased by 900, are the specific gravities of the oil compared with water=1000. Table LXXV. contains a list of hydrometers, the temperature at which each is intended to be used, and the formula for converting the degrees into specific gravities.[1]

Alcohol Method.—The foregoing methods are not directly applicable to solid fats and waxes, but with the aid of a device first suggested by Fresenius and Schulze, they may be made so. This consists in preparing a mixture of alcohol and water in which the solid substance neither sinks nor floats, and taking the specific gravity of the liquid. The same method is obviously applicable to liquid oils, and is often conveniently employed for ascertaining the specific gravity of the small quantities of hydrocarbon oil isolated in the process of analysis.

If a solid substance is being experimented with, it may be prepared for the test in the manner recommended by Allen and Chattaway. The fat or wax is melted at the lowest possible temperature and allowed to solidify spontaneously, without artificial chilling, in a flat-bottomed capsule or watch-glass. Smooth fragments are then cut from it with a knife or cork borer. In the case of some fats which contract greatly on solidification, such as palm-nut and coconut oils, it is absolutely essential to allow the substance to solidify by standing overnight before taking the specific gravity. One of the fragments thus obtained is held under the surface of dilute alcohol, by means of forceps, and carefully freed from adhering air-bubbles by means of a camel-hair brush. The specific gravity of the alcohol is then adjusted by adding either stronger or weaker alcohol (not water, because of the air-bubbles formed on mixing) until the fragment remains suspended anywhere in the liquid. The specific gravity of the diluted alcohol is then determined by the hydrometer or the Westphal balance. Of course, the final adjustment of the alcohol must be made exactly at the temperature at which the specific gravity of the substance is required to be known.

Reduction to the Vacuum.—The apparent weight of a body in air is less than the true weight by an amount equal to the weight of air displaced by the body. As this is true of the weights as well as of the body weighed, if these happen to be the same in specific gravity, and, therefore, equal in volume, the error on one side of the scale balances that on the other. But when the body weighed is water and the weights are of brass, about 8·5 times heavier

---

[1] See Dittmar, *Chemical Arithmetic*, part i. p. 78; also Schaedler, *Technologie der Fette und Oele*, p. 73.

than water, the volumes are nearly as 17 : 2, and, therefore, the apparent weight of the water is less than the true weight by an amount equal to about $\frac{15}{17}$ths of the weight of air displaced by the water, and the apparent weight of any other liquid equal in volume to the water is short of the true weight by a like amount.

TABLE LXXV.—FORMULÆ FOR CONVERTING HYDROMETER DEGREES TO SPECIFIC GRAVITIES.

Hydrometer.	Temperature.	For Liquids heavier than Water.	For Liquids lighter than Water.
Balling, . .	17·5° C.	$S=\frac{200}{200-n}$	$S=\frac{200}{200+n}$
Beaumé I., . .	12·5° C.	$S=\frac{145{\cdot}88}{145{\cdot}88-n}$	$S=\frac{145{\cdot}88}{145{\cdot}88+(n-10)}$
Beaumé II., .	15° C.	$S=\frac{144{\cdot}3}{144{\cdot}3-n}$	$S=\frac{144{\cdot}3}{144{\cdot}3+(n-10)}$
Beaumé III., .	17·5° C.	$S=\frac{146{\cdot}78}{146{\cdot}78-n}$	$S=\frac{146{\cdot}78}{146{\cdot}78+(n-10)}$
Beck, . . .	12·5° C.	$S=\frac{170}{170-n}$	$S=\frac{170}{170+n}$
Brix, . . .	12·5° R. 15·625° C.	$S=\frac{400}{400-n}$	$S=\frac{400}{400+n}$
Cartier, . .	12·5° C.	$S=\frac{136{\cdot}8}{126{\cdot}1-n}$	$S=\frac{136{\cdot}8}{126{\cdot}1+n}$
Fischer, . .	12·5° R. 15·625° C.	$S=\frac{400}{400-n}$	$S=\frac{400}{400+n}$
Gay-Lussac, .	4° C.	$S=\frac{100}{100-n}$	$S=\frac{100}{100+n}$
E. G. Greiner, .	12·5° R. 15·625° C.	$S=\frac{400}{400-n}$	$S=\frac{400}{400+n}$
Stoppani, . .	12·5° R. 15·625° C.	$S=\frac{160}{160-n}$	$S=\frac{160}{160+n}$
Twaddell, . .	60° F.	$S=\frac{n+200}{200}$	
	C = Centigrade. F = Fahrenheit. R = Réaumur.	S = specific gravity. n = degrees.	

Therefore, if W and w be the apparent weights of the water and the liquid respectively, and if $W+x$ be the true weight of the water, then $w+x$ is the true weight of the liquid, and the real specific gravity of the liquid is not $\frac{w}{W}$

but $\frac{w+x}{W+x}$.[1] x is always very small, and when W and w are nearly the same, *i.e.* when the specific gravity is near unity, as in the case of most lubricating oils, the error amounts to only one or two points in the fourth decimal place, and may be neglected. But, in determining the specific gravity of a mixture of glycerol and water for the purpose of ascertaining the viscosity by means of the tables on pp. 197-199, the correction must be applied. As the weight of air varies with the temperature and pressure, the correction is not always exactly the same, but unless an error of ±0·00005 is too great (which is not the case here), the following table[2] will give the necessary correction without calculation:—

TABLE LXXVI.—CORRECTION FOR REDUCTION OF SPECIFIC GRAVITY TO A VACUUM.

Sp. gr. found.	Correction to be added.	Sp gr. found.	Correction to be added.
0·75	+ 0·00031	1·05	- 0·00006
0·80	+ 0·00025	1·10	- 0·00012
0·85	+ 0·00018	1·15	- 0·00018
0·90	+ 0·00012	1·20	- 0·00025
0·95	+ 0·00006	1·25	- 0·00031
1·00	± 0·00000	1·30	- 0·00037

Change of Standard (Determination of Density).—To reduce the specific gravity of an oil or other liquid, compared with water at $t°$ C. as standard, to the specific gravity compared with water at 4° C. as standard—*i.e.* to ascertain the *density* of the liquid at $t°$—all that is necessary is to multiply the specific gravity at $t°$ by the density of water at $t°$ which is given in Table LXXVII.[3]

Example.—The sp. gr. of a mixture of glycerol and water at $\frac{20°}{20°}$ C. was found to be 1·1848; therefore, the sp. gr. at $\frac{20°}{4°}$ C., *i.e.* the density of the liquid, is $1{\cdot}1848 \times 0{\cdot}99826 = 1{\cdot}1828$.

Alteration in the Densities of Lubricating Oils produced by Change of Temperature.—In order to determine the viscosity of a lubricating oil at any temperature, it is necessary to know the density of the oil at that temperature. At either 60° F. (15·5° C.) or 212° F. (100° C.) it is easy to determine the density, but at intermediate temperatures it is not always easy. The density may, however, be calculated nearly enough, when the densities at 60° and 212° F. are known.

In Table LXXVIII. are given the densities at 60° F. and 212° F. of a number of lubricating oils, with the average differences for 1° F. and 1° C. It will be noticed that these differences are very nearly the same for all oils, and it is possible, without much error, to calculate the density of an oil at any given temperature between 60° F. and 212° F., if we know the density at 60° F., by means of the following formula:—

---

[1] See Alder Wright, "On Fluid Specific Gravities," *Jour. Soc. Chem. Ind.*, xi. (1892), p. 297.

[2] Dittmar, *Chemical Arithmetic*, i. 111.

[3] Taken, with slight alterations, from Dittmar's *Chemical Arithmetic*, i. 107.

$$D=d-kt$$

Where, d=the density of the oil at 60° F.

$$k=\begin{cases}0{\cdot}000368 \text{ for a fatty oil.}\\ 0{\cdot}000367 \text{ for a Scotch mineral oil.}\\ 0{\cdot}000345 \text{ for a Russian mineral oil.}\\ 0{\cdot}000350 \text{ for an American mineral oil.}\end{cases}$$

t=the number of degrees above 60° F.

D=the required density.

TABLE LXXVII.—DENSITIES OF WATER AT 4° C. (39·2° F.) TO 100° C. (212° F.) (*Rosetti.*)

t.		Density D	Diff	t.		Density D.	Diff	t.		Density D	Diff.
° C.	° F.			° C.	° F.			° C	° F.		
4	39·2	1·00000		36	96·8	·99383	-36	68	154·4	·97908	-57
5	41	·99999	-2	37	98·6	47	37	69	156·2	·97851	57
6	42·8	97	4	38	100·4	10	37	70	158	·97794	58
7	44·6	93	4	39	102·2	·99273	38	71	159·8	36	59
8	46·4	89	7	40	104	35	38	72	161·6	·97677	59
9	48·2	82	7	41	105·8	·99197	39	73	163·4	18	60
10	50·0	75	9	42	107·6	58	40	74	165·2	·97558	60
11	51·8	66	11	43	109·4	18	40	75	167	·97498	60
12	53·6	55	12	44	111·2	·99078	41	76	168·8	38	61
13	55·4	43	13	45	113	37	41	77	170·6	·97377	61
14	57·2	30	14	46	114·8	·98996	42	78	172·4	16	61
15	59	16	16	47	116·6	54	44	79	174·2	·97255	61
16	60·8	00	16	48	118·4	10	45	80	176	·97194	62
17	62·6	·99884	19	49	120·2	·98865	46	81	177·8	32	62
18	64·4	65	19	50	122	19	47	82	179·6	·97070	63
19	66·2	46	20	51	123·8	·98772	47	83	181·4	07	64
20	68	26	21	52	125·6	25	48	84	183·2	·96943	64
21	69·8	05	22	53	127·4	·98677	48	85	185	·96879	64
22	71·6	·99783	23	54	129·2	29	48	86	186·8	15	64
23	73·4	60	23	55	131	·98581	47	87	188·6	·96751	64
24	75·2	37	25	56	132·8	34	48	88	190·4	·96687	65
25	77	12	25	57	134·6	·98486	49	89	192·2	22	66
26	78·8	·99687	27	58	136·4	37	49	90	194	·96556	66
27	80·6	60	27	59	138·2	·98388	50	91	195·8	·96490	67
28	82·4	33	28	60	140	38	52	92	197·6	23	67
29	84·2	05	28	61	141·8	·98286	52	93	199·4	·96356	68
30	86	·99577	30	62	143·6	34	52	94	201·2	·96288	69
31	87·8	47	30	63	145·4	·98182	54	95	203	19	70
32	89·6	17	32	64	147·2	28	54	96	204·8	·96149	70
33	91·4	·99485	33	65	149·0	·98074	55	97	206·6	·96079	71
34	93·2	52	34	66	150·8	19	55	98	208·4	08	71
35	95	18	35	67	152·6	·97964	56	99	210·2	·95937	71
								100	212	·95866	

At 60° F., D=0·99907.
70° F., D=0·99803.

At 100° F., D=0·99317.
150° F., D=0·98044.

The following examples show the degree of accuracy thus attainable:—

1. *Rape Oil.*

Density at 60° F. (determined) =0·9151
Density at 100° F. (calculated)=0·9151—0 000368×40=0·9004
Density at 100° F. (determined) =0·9002
Density at 150° F. (calculated)=0·9151—0·000368×90=0·8820
Density at 150° F. (determined) =0·8818

TABLE LXXVIII.—TABLE SHOWING THE ALTERATION IN DENSITY OF LUBRICATING OILS CAUSED BY RISE OF TEMPERATURE (*Archbutt*).

Description of Oil.	Density at		Difference per One Degree.	
	60° F. 15·5° C.	212° F. 100° C.	Fahr.	Cent.
Animal and Vegetable Oils.				
Sperm oil,	0·87828	0·82290	0·000364	0·000656
Olive oil,	0·91586	0·85962	0·000370	0·000666
Rape oil,	0·91506	0 85948	0·000365	0·000659
Tallow,	0·87840	0·85572	0·000366	0·000680
	at 150° F.			
Castor oil,	0·96240	0·90500	0·000378	0·000659
Neutral wool fat,	0·91370	0·89092	0·000367	0·000660
		Average	0·000368	0·000663
Scotch Mineral Oils.				
'865,'	0·86826	0·81160	0·000373	0·000671
'890,'	0·89054	0·83560	0·000361	0·000651
		Average	0·000367	0·000661
Galician Mineral Oils.				
Light (pale) machinery oil,	0·88854	0·83388	0·000359	0·000646
Heavy (pale) machinery oil,	0·89610	0·84322	0·000348	0·000626
		Average	0·000354	0·000636
Russian Mineral Oils.				
Light machinery and spindle oil,	0·89782	0·84420	0·000353	0·000635
Medium (pale) machinery oil,	0·90960	0·85684	0·000347	0·000625
Heavy (pale) engine and machinery oil,	0·90850	0·85682	0·000340	0 000612
Heavy (dark) axle oil,	0·90930	0 85692	0·000344	0·000619
Extra heavy (pale) engine and machinery oil,	0·90852	0·85682	0·000340	0·000612
		Average	0·000345	0·000620
American Mineral Oils.				
Spindle oil ('Pale 835'),	0·88436	0·82978	0·000359	0·000647
,, ,, ('Pale 860/70'),	0 86766	0·81384	0·000354	0·000638
Light machinery oil ('900/7'),	0·90082	0·84694	0·000354	0·000638
'Globe' oil (dark),	0·88019	0·82726	0·000348	0·000627
Light machinery oil ('905/10'),	0·90540	0·85258	0·000347	0·000626
'Solar red,' engine oil,	0·91620	0·86242	0·000354	0·000637
'Bayonne' engine oil,	0·91132	0·85790	0·000351	0·000633
'Queen's red' engine oil,	0·91249	0·85998	0·000346	0·000623
'Altair' (Texas) red engine oil,	0·93162	0 87820	0·000351	0·000632
Medium (dark) machinery oil,	0·88390	0·82910	0·000361	0·000649
'Galena' axle oil,	0·90790	0·85552	0·000345	0·000621
Heavy (pale) machinery oil,	0·90124	0·84930	0·000342	0·000616
Filtered cylinder oil ('Valvoline'),	0·88915	0·83769	0·009338	0·000609
,, ,, ,, ('F.F.F.'),	0·88982	0·83932	0·000332	0·000598
Dark cylinder oil ('A'),	0·89908	0·84414	0·000361	0·000651
,, ,, ,, ('N'),	0·89832	0·84440	0·000361	0·000650
,, ,, ,, ('Locomotive'),	0·89974	0·84732	0·000345	0·000621
Dark filtered cylinder oil ('N'),	0·90942	0·85556	0·000354	0·000637
		Average	0·000350	0·000631

2. *American Cylinder Oil.*

Density at 60° F. (determined) =0·8858
Density at 100° F. (calculated)=0·8858−0·000350×40=0·8718
Density at 100° F. (determined) =0·8720

TABLE LXXIX.—SPECIFIC GRAVITIES AT 60° F. (15·5° C.) OF SOME FATTY OILS, FATS, WAXES, ETC.

Class.	Name of Oils, etc.	Specific Gravity at 60° F.
Vegetable Non-drying Oils and Fats.	Arachis (earthnut) oil,	0·911 –0·926
	Ben oil,	0·912 –0·920
	Castor oil,	0·959 –0·968
	Coconut oil (neutral),	0·959
	Hazel nut oil,	0·915 –0·917
	Japan wax,	0·984 –0·993
	Olive kernel oil,	0·918 –0·919
	Olive oil,	0·914 –0·918
	Palm oil,	0·921 –0·925
	Palmnut oil (neutral),	0·978
Vegetable Semi-drying Oils and Fats.	Beech nut oil,	0·920 –0·923
	Brazil nut oil,	0·918 –0·919
	Cameline oil,	0·920 –0·926
	Cottonseed oil,	0·921 –0·926
	Cottonseed stearin,	0·919 –0·923
	Curcas oil,	0·919 –0·921
	Maize oil,	0·921 –0·928
	Mustard oil (black),	0·916 –0·919
	,, ,, (white),	0·918 –0·916
	Rape oil,	0·9132–0·916
	Ravison oil,	0·918 –0·922
	Sesamé oil,	0·920 –0·926
	Soja bean oil,	0·923 –0·927
Vegetable Drying Oils.	Candle nut oil,	0·920 –0·926
	Hempseed oil,	0·925 –0·931
	Linseed oil,	0·931 –0·938
	Nigerseed oil,	0·925 –0·928
	Poppyseed oil,	0·924 –0·927
	Sunflower oil,	0·924 –0·926
	Tung oil,	0·934 –0·942
	Walnut oil,	0·925 –0·927
Animal Oils and Fats.	Bone fat,	0·914 –0·916
	Horse fat,	0·916 –0·922
	Horsefoot oil,	0·920 –0·927
	Lard,	0·931 –0·938
	Lard oil,	0·913 –0·919
	Neatsfoot oil,	0·914 –0·919
	Tallow (beef),	0·943 –0·953
	,, (mutton),	0·937 –0·953
Marine Animal Oils and Fluid Waxes.	Cod liver oil,	0·922 –0·930
	Dolphin body oil,	0·927
	Fish liver oils other than cod liver,	0·910 –0·931
	Menhaden oil,	0·928 –0·931
	Porpoise body oil,	0·926 –0·935
	Porpoise jaw oil,	0·926
	Sardine oil (Japanese),	0·932 –0·935
	Seal oil,	0·924 –0·927
	Sperm oil,	0·878 –0·884
	Sperm oil (Arctic),	0·876 –0·881
	Whale oil,	0·916 –0·927
Waxes (solid).	Beeswax, usually,	0·962 –0·966
	Carnauba wax,	0·990 –0·999
	Spermaceti,	0·942 –0·946
	Wool fat, crude (18·4% free fatty acids),	0·959
	,, ,, (neutral),	0·954
Blown Oils.	Blown cottonseed oil ('Lardine'),	0·967 –0·985
	Blown rape and ravison oils,	0·955 –0·979
Miscellaneous.	Ceresin (refined ozokerit),	0·918 –0·922
	Colophony,	1·045 –1·10
	Paraffin wax (according to melting-point),	0·824 –0·940
	Petroleum jelly,	0·856 –0·909

TABLE LXXX.—SPECIFIC GRAVITIES AT $\frac{100^\circ}{100^\circ}$ C. OF SOME MIXED FATTY ACIDS (*Archbutt*).

Mixed Fatty Acids from :—	Specific Gravity.
Arachis (earthnut) oil, ...	0·879
Blown cottonseed oil (sp. gr. 0·9720), . .	0·9266
„ rape oil (sp. gr. 0·9718), . . .	0·923
Cottonseed oil, ...	0·882
Lard oil, ...	0·878
Linseed oil, ...	0·892–0·893
Neatsfoot oil, ...	0·874–0·880
Nigerseed oil, ...	0·889
Olive oil, ...	0·874–0·876
Palm oil, ...	0·870
Poppyseed oil, ...	0·889
Rape oil, ...	0·875–0·876
Ravison oil, ...	0·880
Tallow, ...	0·870
Whale oil, ...	0·892

TABLE LXXXI.—SPECIFIC GRAVITIES AT $\frac{100^\circ}{100^\circ}$ C. OF SOME MIXED ALCOHOLS (*Archbutt*).

Mixed Alcohols from :—	Specific Gravity.
Arctic sperm oil, ...	0·8271
Beeswax, ...	0·8239
Carnauba wax, ...	0·8426
Wool fat, ...	0·9566

TABLE LXXXII.—SPECIFIC GRAVITIES AT 60° F. (15·5° C.) OF MINERAL LUBRICATING OILS, ROSIN OIL, ETC.[1]

Description.	Specific Gravity.
1. *Pale or Red Lubricating Oils* :—	
Extra low viscosity oils, for the very lightest machinery, typewriters, high-speed spindles, etc., . . .	0·830 to 0·865
Low viscosity (say up to 18 centipoises at 140° F.) oils for light machinery, spindles, shafting, ring-lubricated bearings, etc., ...	0·850 „ 0·935
Very low cold test oils, included in the above, specially suitable for refrigerator plant, ...	0·910 „ 0·935
Medium viscosity oils, for general machinery and engine purposes, dynamos, air-compressors, etc., .	0·870 „ 0·940
Heavy and extra heavy viscosity oils for heavy machinery, gearing, etc., .	0·875 „ 0·955
Internal combustion engine oils, . .	0·890 „ 0·935
Filtered cylinder oils, ...	0·885 „ 0·918
2. *Dark lubricating oils* :—	
Machinery and axle oils, . . .	0·880 „ 0·945
Borneo dark machinery oils, . .	0·990 „ 0·996
Steam cylinder oils, ...	0·900 „ 0·935
3. *Rosin oils*, ...	0·960 „ 1·01
4. *Heavy coal-tar oils*, ...	over 1·01

---

[1] Partly based upon B.E.S.A. Specification No. 210, 1924.

C.—SPECIFIC HEAT.

The specific heat of a body is the ratio of the quantity of heat required to raise that body one degree in temperature to the quantity required to raise an equal weight of water one degree[1]; and since one gramme of water requires one calorie to raise its temperature 1° C. the specific heat of a substance is also, numerically, the number of calories of heat required to raise the temperature of one gramme of that substance by 1° C.

Not much work has been done on the specific heats of lubricating oils, but it has been shown that different oils have different specific heats and that the specific heats of mineral oils increase considerably with rise of temperature.

Mabery and Goldstein[2] have determined the specific heats of a number of pure hydrocarbons of different series obtained from petroleum, and have found that the specific heats of paraffin hydrocarbons are higher than those of corresponding members of other series of hydrocarbons of lower hydrogen content. Thus, the methylene hydrocarbons examined had lower specific heats than the paraffin hydrocarbons, and hydrocarbons of the series C_nH_{2n-2} from Texas petroleum had still lower specific heats. Thomsen[3] considers that for practical purposes the specific heats of mineral lubricating oils at 50° C. may be taken as follows:—

Paraffin base, distilled, low viscosity oils, ...	0·49
Russian oils and heavy viscosity Pennsylvanian oils, etc.,	0·47
Many asphaltic base oils, ...	0·44

E. H. Leslie and J. C. Geniesse[4] have recently determined the specific heats of six typical lubricating oils over a range of temperatures from 100° to 290° F. (37·78° to 143·33° C.). The oils studied were products made by well-known American manufacturers, and their general characters are shown in Table LXXXIII. The specific heats were determined by measuring the rise in temperature resulting from the passage of a measured electrical current through a resistance coil immersed in the oil in a vacuum-jacketed calorimeter, the oil being kept in motion by a stirrer rotating at a constant speed.

TABLE LXXXIII.

Oil.	Specific Gravity at 60°/60° F.	Times of Efflux from the Saybolt Universal Viscometer at		Type of Petroleum from which the Lubricating Oils were manufactured.
		100° F. (37·78° C.) Seconds.	210° F. (98·89° C.) Seconds.	
A	0·9077	235·5	46·3	Mixture of paraffin-base and mixed-base petroleums.
B	0·9359	612·5	60·2	Mixed-base petroleum.
C	0·8939	1190·0	96·5	
D	0·9045	199·0	45·3	Mixture of mixed-base Oklahoma, Kansas, and Texas petroleums.
E	0·9207	688·0	67·0	
F	0·9221	2385·0	135·0	

---

[1] Maxwell, *Theory of Heat.*

[2] *Jour. Amer. Chem. Soc.*, **28** (1902), 66.

[3] *The Practice of Lubrication* (1920), p. 43.

[4] *Ind. and Eng. Chem.*, **16** (1924), 582–583.

Every care was taken to ensure accuracy, and it is believed that the error in no case exceeded ±1·5 per cent. The results obtained are recorded in Table LXXXIV.

All the oils examined show an increase of specific heat of 35 to 40 per cent. over the temperature range covered by the experiments; they also show considerable differences between the specific heats of the different oils. These changes and differences are of importance in lubrication, as the lower the specific heat, the more readily the oil film is raised in temperature and lowered in viscosity by the frictional heat. Leslie and Geniesse suggest that the variation in specific heat is connected with a change of molecular nature and state of the oil, and that a systematic study of the specific heats of a large number of carefully chosen, typical lubricating oils would be a desirable and profitable field of research.

Table LXXXIV.—Specific Heats of Lubricating Oils.

Oil.	100° F. (37·78° C.)	150° F. (65·56° C.)	200° F. (93·33° C.)	250° F. (121·11° C.)	290° F. (143·33° C.)
A	0·384	0·449	0·502	0·524	0·555
B	0·385	0·429	0·485	0·510	0·545
C	0·437	0·467	0·509	0·558	0·580
D	0·421	0·451	0·502	0·521	0·546
E	0·411	0·440	0·498	0·527	0·560
F	0·394	0·427	0·476	0·535	0·570

D.—FLASH POINT AND FIRE POINT.

All lubricating oils when sufficiently heated give off vapour. The "*flash point*" is the temperature at which the amount of vapour given off, under controlled conditions, is sufficient to form an inflammable or mildly explosive mixture with the air over the surface of the oil, so that on the application of a flame the gaseous mixture ignites and burns with a momentary flash. As the temperature of the oil rises, more vapour is given off, and when the production of vapour is rapid enough to maintain a continuous flame, the oil takes fire and burns; the temperature at which this occurs is called the "fire point," "fire test," or "burning-point" of the oil. The determination of these points, more especially of the flash point, is of great importance in the examination of lubricating oils, because oils of low flash point are unsafe to use, and liable to be wasteful. The flash point, in conjunction with other tests, gives some indication of the kind of crude oil from which a mineral lubricating oil has been obtained.

An important difference exists in the behaviour of the two classes of lubricating oils when heated. The fatty (animal and vegetable) oils do not evaporate, and no vapours are given off (except, possibly, traces of moisture) on heating them, until the oils begin to decompose; the vapours then given off are products of the destructive distillation of the oil, which requires a fairly high temperature to bring it about, and consequently the flash points of such oils are high (over 400° F.). On the other hand, all mineral or hydrocarbon oils evaporate when heated, and the temperature at which sufficient vapour is given off to cause a flash depends upon what hydrocarbons are contained in the oil. Mineral lubricating oils do not, as a rule, contain the more volatile hydrocarbons of petroleum, which belong properly to the naphtha and burning-oil fractions, but "*natural*" oils, and imperfectly refined oils, may give off vapour at temperatures low enough to be dangerous.

Owing to improved methods of manufacture, and greater care in refining, low-flashing mineral oils are more rarely met with than formerly; nevertheless, in textile mills, and wherever danger from fire has to be guarded against, the precaution of determining the flash point of the lubricating oil must never be neglected. In 1883, Veitch Wilson stated that he had met with one sample of oil offered for lubrication which flashed at the ordinary temperature of the atmosphere, and several which flashed at 150° to 200° F. Ordway, who examined a large number of oils in actual use in cotton mills in the United States, found several which flashed at 180° F., and a larger number which flashed below 212° F. The use of such dangerous oils would not now be tolerated, and a flash point of 340°–350° F. is regarded by oil manufacturers, users, and insurance companies, as a standard of safety to which all oils for indoor machinery ought to attain. For outdoor machinery, a limited quantity of oil is still sold having a flash point of 200°–210° F.

It is seldom necessary to determine the flash points of fatty oils, but, as a means of detecting or confirming adulteration with light mineral oil, the test is sometimes useful.

It is a usual practice to determine the flash point of cylinder oils, on the ground that oils of high flash point may be expected to evaporate less in the cylinders than those of lower flash point. But there is no necessary relation between the flash point and the volatility of lubricating oils, and in comparing together mineral oils of different origin the less volatile oil may even have the lower flash point (see Table LXXXV. on p. 261). In the authors' opinion, the flash point of cylinder oils is a test which might with advantage be dispensed with, and replaced by a quantitative determination of the amount lost by evaporation under definite conditions (see Volatility, p. 258).

Determination of the Flash Point.

Open Flash Point and Fire Point.—The method formerly used for determining the flash and fire points of lubricating oils, known as the "open test," consists in heating some of the oil, in which the bulb of a thermometer is immersed, in a small, open, metallic cup, a porcelain crucible embedded in sand, or some equivalent contrivance, and passing a small flame across the surface of the oil at frequent intervals. When the amount of vapour given off is enough to form an inflammable mixture with the air, a pale blue flash occurs on application of the test flame, and the temperature at which this flash is first observed is the flash-point of the oil. To determine the fire point, the testing is continued until on applying the test flame to the surface of the oil it takes fire and burns continuously. A little experience is sufficient to show that the above rough method of determining the flash point is incapable of giving uniform results. The temperature at which the first flash is obtained depends upon the presence or absence of air currents, the rate of heating, the size and shape of the vessel used, the distance of the test-flame from the oil surface, etc.

The *Standard Method* [1] of the Institution of Petroleum Technologists specifies that the oil-cup, heating-jacket, and thermometer used shall be the same as those employed for the Pensky-Martens closed test (see p. 255), the cover of the cup being replaced by a clip which encircles the upper rim of the cup and carries the thermometer and test flame. The quantity of oil to be used

---

[1] *Standard Methods*, published by the Institution of Petroleum Technologists, 1924, p. 44.

is the same as that specified for the closed test, so that closed flash point, open flash point, and fire point may be determined in succession with the same sample of oil. The thermometer is fixed so that the centre of its bulb is in the vertical axis of the cup and ½-inch below the filling line. The test flame is of the same size as specified for the closed test and is fixed at the vertical axis of the cup and at a level with the upper edge of the cup. No stirring is employed, and the greatest precautions must be taken to screen the apparatus from draughts. The rate of heating is 10° F. per minute. The *open flash point* is taken as the temperature at which a flash appears at any point on the surface of the oil.

To determine the *fire point*, the heating is continued under the above conditions until the oil ignites and continues to burn for five seconds. This temperature is termed the fire point.

Flash Point (*Closed Test*).—One of the authors was among the first to abandon the "open" in favour of the "closed test," now almost universally employed for testing lubricating as well as burning oils. For this purpose a brass cup furnished with a close-fitting lid and slide (an exact copy of the Abel petroleum cup) was constructed with brazed joints, so as to withstand heating to a high temperature, and instead of the outer water-bath a thick cast-iron cup on feet was made in which the test-cup fitted loosely. Heat was so applied to the cast-iron body as to cause the temperature of the oil to rise rapidly at first, and when near the flash point the rate of heating was reduced to about two degrees per minute, and the gas testing-flame was applied every two degrees by opening the slide, exactly as in the Abel test. Improved forms of apparatus have since been devised by Pensky and Martens and by Gray, in which the important addition of a stirrer has been introduced, which enables the heating of the oil to be conducted much more rapidly without impairing the uniformity of the results.

The Pensky-Martens Test Apparatus.[1]—This apparatus, shown in fig. 93, consists of the brass cup A, with flange B, which drops loosely into the cast-iron body C, the flange resting upon the dome-shaped brass shield D. The position of the cup is fixed by studs EE which engage in slots in the flange. The cup has a close-fitting lid with a revolving perforated slide actuated by the spring lever H, by turning which the openings in the slide are brought over corresponding openings in the lid, and the little gas testing-flame is at the same time caused to dip through the

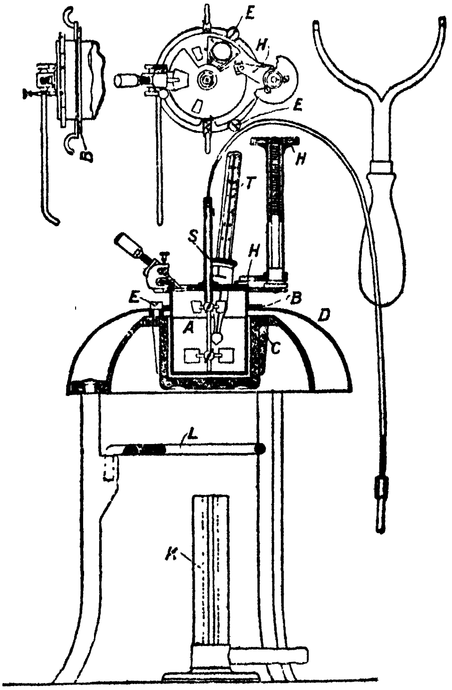

FIG. 93.

---

[1] The Institution of Petroleum Technologists (*Standard Methods*, 1924, pp. 28–35) have issued a specification (L.O. 7) giving the dimensions, with tolerances, and other details of the apparatus and method to be employed in carrying out the test under standard conditions.

central opening into the air-space above the oil in the cup, igniting the mixture of air and vapour as soon as it becomes inflammable. The lid also carries the stirrer S, with two sets of vanes, one in the oil and the other in the air space; also the thermometer T.

In making a test, the cup is placed upon a level surface and filled with oil to the mark; it is then placed in the test-apparatus, and the lid is put on. The small test-flame having been lighted and turned down until the luminous tip has almost disappeared, the oil is gradually heated up by means of the burner K, the wire net L being swung out of the way. The flame of the burner K at first used is large enough to heat the oil rapidly, but as soon as the test-flame when lowered into the cup shows a tendency to enlarge, the heat is moderated and the wire net may be swung over the flame. The stirrer is now worked so as to keep the oil as well as the vapour and the air thoroughly mixed, and the test-flame is applied at every two degrees' rise of temperature, until the flash-point is reached. The temperature of the oil towards the end of the experiment may rise at the rate of 10° C. per minute (see below), so long as the oil is kept thoroughly stirred, but the stirrer must not be worked while the test-flame is being applied. The application of the flame should occupy about two seconds, three half-seconds being occupied in opening the slide and the remaining half-second in closing it. Oils containing water must be dried by filtering through dry filter paper or a column of coarsely crushed calcium chloride before being tested, as the presence of much moisture causes very irregular and incorrect results to be obtained.

This apparatus has been subjected to an elaborate series of tests by Holde. By making repeated tests with oils of different flash points, he has shown that rapid heating with continuous vigorous stirring, gives the same results as slow heating without stirring, and when testing the same oil several times the results agreed within 2 or 3 degrees C. (3½° to 5½° F.), even when the thermometer rose as rapidly as 10° C. (=18° F.) per minute towards the end of the experiment. According to Holde, a rise of temperature of 12° C. (=22° F.) per minute is permissible. The size of the testing-flame does not influence the result appreciably, but it is not desirable to use too large a flame, otherwise the flash may not be plainly seen. Filling the oil holder above the mark, and so reducing the air space, tends to lower the flash-point. Thus, Holde found that with an oil flashing at about 155° C. (=311° F.) the mean flash-point differed 4° C. (=7·2° F.) according to whether the cup was filled 1 cm. below or 1 cm. above the mark. Accordingly it has been proposed by Aisinmann[1] that as an oil of high flash-point will expand during the test more than an oil of low flash-point, the cup should not be filled to the same mark with all oils, but the quantity used should be such as will by expansion have reached to the mark at the flash-point.

To adopt Aisinmann's proposal would greatly increase the labour of determining the flash point, without any equivalent advantage. The test, however performed, is an empirical one, and all that is required is the adoption of a uniform system of testing, which has now been laid down by the Institution of Petroleum Technologists and the American Society for Testing Materials, so that disputes between manufacturers and users may be avoided.

Gray's Test Apparatus.—This (fig. 94) is an adaptation of the Pensky-Martens revolving slide and stirrer to the Abel cup. The inventor states,[2] that in working with the Pensky apparatus he found the results under varied conditions to be excellent, and was struck with the idea that the instrument might be simplified and made more suitable for everyday work in the techni-

---

[1] *Jour. Soc. Chem. Ind.*, xiv. (1895), p. 284.

[2] *Ibid.*, x. (1891), p. 348.

cal laboratory. He therefore devised a modified apparatus, which is thus described:—

"The stirrers, consisting of two sets of vanes, one in the oil and the other in the vapour space, are attached to a vertical shaft passing through the cover and terminating at the top in a small bevelled wheel, the bevel of which is milled. A horizontal shaft (carried on two supports) terminates at one end with a bevelled wheel, gearing with the one on the stirrer shaft, and at the other end with the disc carrying a small handle with which to rotate the shaft. This shaft also carries a collar with two pins projecting about ¼ inch at diametrically opposite points. By sliding the shaft slightly to the right the bevel wheels are put out of gear, and the pins projecting from the collar are drawn into position for actuating the test arrangement. This consists of a sliding cover on the top of the lid proper, so arranged that when the former is moved it depresses the test light to the proper point, and brings the orifices opposite those on the fixed lid. There are three orifices, one, at which the test light is applied, the other two, situated one at either side of it, being for the admission of air. It will thus be readily seen that the change from stirring to testing, and *vice versa*, can be instantly performed.

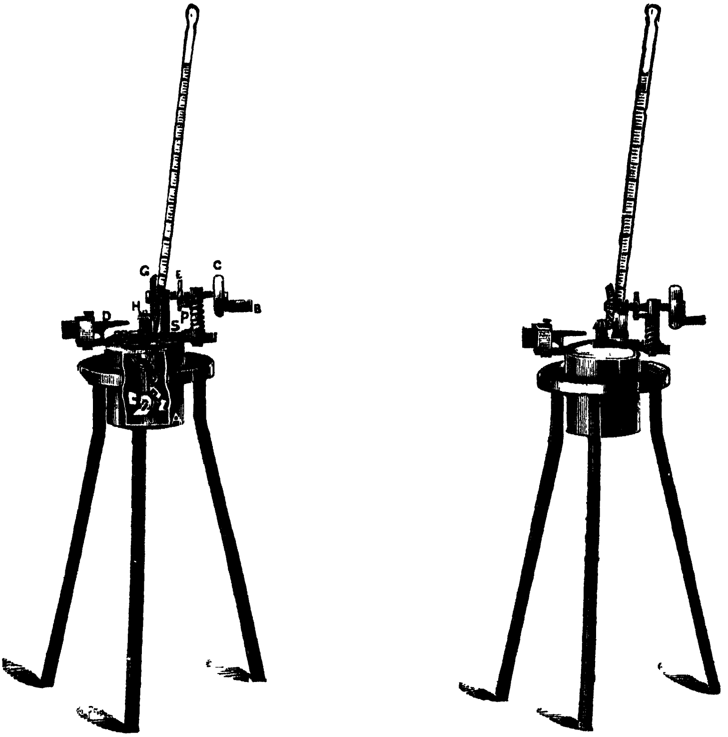

Fig. 94.

"The results obtained by this apparatus are identical with those obtained by the Pensky-Martens. They are not affected by the source of heat, a naked flame giving the same results as the sand bath. It is immaterial what the rate of heating is, provided it is not too rapid to prevent a correct reading of the thermometer. I prefer to reduce the rate of heating when nearing the point at which the oil is expected to flash. The stirrers do not require to be worked continuously, but merely at intervals. I find it advisable to stir more frequently when the rate of heating is fast."

In the latest form of this apparatus, the oil-cup does not fit directly into the tripod stand, as shown in the figure, but into a cast-iron vessel which is supported on the tripod, somewhat after the same manner as in the Pensky-Martens apparatus.

E. VOLATILITY.

The property of being volatile or capable of evaporating without decomposition distinguishes the hydrocarbon oils from the fatty oils, but the temperature at which evaporation takes place depends upon the nature of the hydrocarbons contained in the oil. In any case the oil does not evaporate unchanged, for those hydrocarbons which are most volatile pass off first, leaving the less volatile hydrocarbons as a more or less viscid residue.[1] If the oil be a mixed one, the fatty component remains also, and the composition and character of the original oil may thus become entirely changed. The best qualities of machine oil scarcely evaporate in use, but at the high-working temperatures of steam-cylinders all mineral lubricating oils evaporate. It is obvious that an oil which evaporates to a serious extent at the working temperature cannot be an economical lubricant, since all that evaporates may be lost and the remainder may form a viscid or even a dry residue on the bearing. Notwithstanding its importance, this property of lubricating oils seldom receives the attention it deserves, a high flash-point being generally regarded as sufficient evidence of the durability of even cylinder oil. Veitch Wilson long ago called attention to this anomaly, pointing out that the significance attached to the flash-point should be limited to what it really indicates, viz. the relative safety of an oil, whilst the tendency to evaporate should be ascertained by measuring the actual loss of weight under definite conditions of time and temperature.

Determination of Volatility.—1. **Standard Method.**[2] *Apparatus.*—The apparatus used is illustrated in fig. 95. It consists of a vapour bath constructed of 1·32 inch (approximately 0·8 mm.) sheet copper. The trough running longitudinally down the bath is 13 inches (330 mm.) long by 1⅝ inch (41 mm.) deep by 2⅜ inches (60 mm.) wide, and the "D"-shaped portion forms a jacket surrounding the trough. Two holes, 1 inch (25 mm.) and ¾ inch (19 mm.) diameter respectively, on opposite sides of the trough and at opposite ends of the vapour jacket, are fitted with tubes projecting to a height of 1 inch (25 mm.) above the surface of the lid. A suitable condenser shall be fitted to the larger to prevent the loss of toluene, and a thermometer to the smaller to control the production of the vapour. The whole bath is set up on a wrought-iron stand having legs 10 inches (254 mm.) length, and the toluene boiled by means of gas jets under the bath. The trough shall be filled with lead shot 0·064 inch (1·6 mm.) diameter, and the interior of the boiler or vapour jacket about half-filled with commercially refined toluene.[3] Beakers of glass, quartz, or porcelain of 1½ inch (38 mm.) diameter by 1½ inch depth. In beakers of such dimensions the surface area of oil exposed is about 1·8 sq. inch (11·6 sq. cm.). To avoid

---

[1] At temperatures above 200° C. the heavy hydrocarbons decompose.

[2] Copied by permission from the book of *Standard Methods*, published by the Institution of Petroleum Technologists, 1924. I.P.T. Serial Designation—L.O. 17, on p. 61.

[3] The boiling-point of toluene at ordinary atmospheric pressure is 110° C. (230° F.), but the loss of heat in transmission makes the temperature of the oil under test only 100° C. (212° F.). The temperature of the oil should be checked by embedding one or more thermometers in the shot, or, if preferred, by putting a "blank" test in, with the thermometer placed in the oil.

variation due to draughts of air passing over the beakers containing the tests, a movable screen, 6 inches deep by 12 inches by 7 inches, should be provided and placed on the bath so as to surround the beakers.

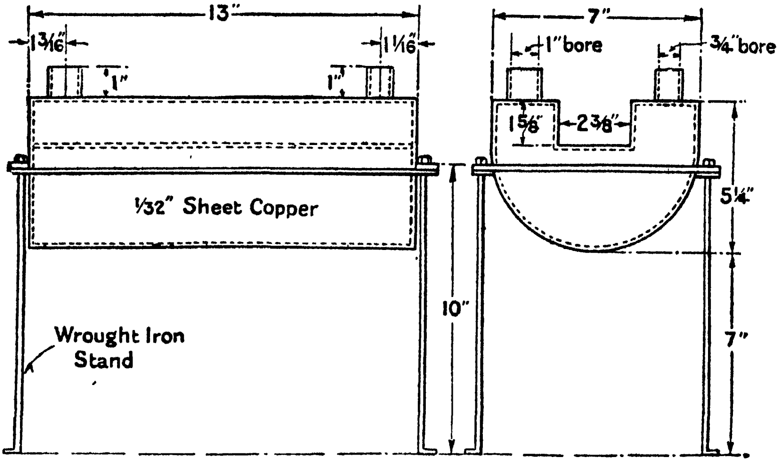

FIG. 95.

Method.—Each beaker shall be weighed, 5 c.c. of oil pipetted into it and again weighed. The temperature of the bath having been brought up by boiling the toluene, each beaker containing a sample shall be embedded right up to its lip in the lead shot in the trough and heated for eight hours. The beakers shall then be removed, cooled, and again weighed. The results shall be given in terms of loss of oil by weight expressed as a percentage of the original quantity.

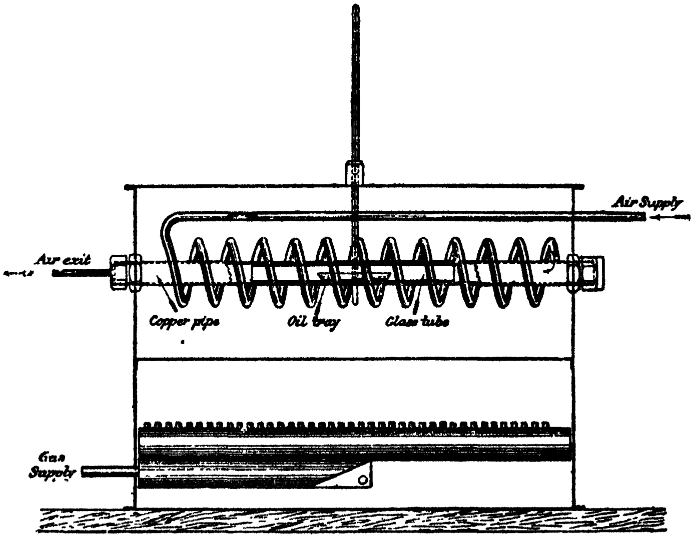

FIG. 96.

2. **Archbutt's Method.**[1]—In this method, the receptacle containing the oil

---

[1] *Jour. Soc. Chem. Ind.*, xv. (1896), p. 326.

is heated to a known temperature, whilst a current of air heated to the same temperature is passed over the oil.

The apparatus used (fig. 96) consists of a straight copper tube, ⅞ inch in internal diameter and 1 or 2 feet long, having a branch tube, ⅜ inch in diameter and about 10 feet long, brazed into it near one end and coiled around the straight tube as shown in the figure. This tube and coil are fixed in a rectangular air-oven made of tinned sheet iron, the sides and top of which are covered with asbestos millboard. The oven is heated by a row of small gas jets, and a thermometer is fixed with its bulb close to the middle of the wide copper tube. The ends of this tube which project beyond the oven are closed by brass screw caps, one of which, at the air-exit end, is perforated and carries a narrow tube in the centre. Air or steam admitted to the coiled tube, after becoming heated in the coil to the temperature of the oven, passes over the oil in the wide tube and escapes through the short tube in the cap. The oil is contained in a platinum tray, 3 inches long by ½ inch wide by ¼ inch deep, which for convenience of manipulation is placed in a glass tube which just slides easily within the copper tube and serves as a carrier.

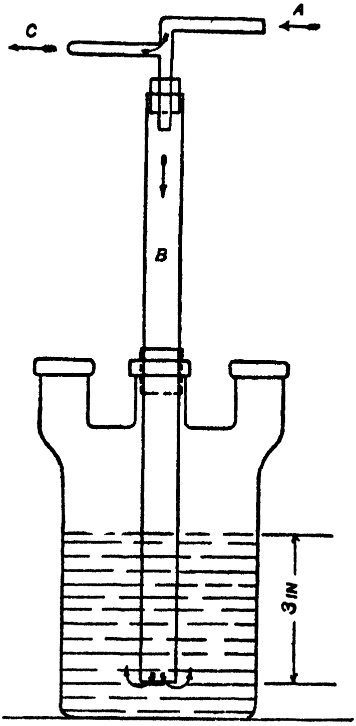

Fig. 97.

The current of air is maintained at the constant speed of 2 litres per minute by means of the simple regulator shown in fig. 97. The air enters the regulator at A, and a slight excess is kept continually escaping at the lower end of the wide tube B, which is immersed to the depth of 3 inches in water. The supply is taken from the branch C, the orifice of which is reduced until just large enough to pass 2 litres per minute against atmospheric pressure under the 3 inches head of water.[1]

The quantity of oil used for a test is 0·5 grm., which forms a thin layer on the bottom of the platinum tray, and the oil is exposed to the air-current for exactly one hour. The temperature of the oven is varied to suit the requirements of the test. For cylinders working at 160 lbs. pressure per square inch, the oil is tested at 370° F., and should not lose more than from 0·5 to 1 per cent. in weight in the time specified (one hour). At 400° F. (=235 lbs. pressure) the loss of weight of cylinder oils is about two and a half times as great as at 370° F.

If it be desired to use a current of steam instead of air, the inlet end of the vaporimeter is connected to a flask or boiler, and the outlet to a condenser. The gas flame under the boiler is regulated so as to distil a definite quantity of water in the hour, 100 c.c. being a convenient volume, though 92 c.c. is the volume required to give a current of steam nearly equal to the above-

---

[1] This is done by connecting the exit-tube C, by means of a flexible tube and cork, to the neck of a bell-jar of known capacity, full of water, sunk in a bucket of water. As the air passes into the bell-jar, the latter is gradually raised so as to maintain the same water level within and without the jar, and the orifice of the branch C is made of such dimensions as will allow the jar to fill in the calculated time.

mentioned air current. The boiler is detached, all the steam is blown out of the tube, and the platinum tray containing the oil is inserted. After waiting a few minutes for the tray of oil to become heated up, the steam current is turned on. If the tray be inserted without first blowing out the steam, water condenses upon the tray, the oil creeps over the edge, and the test is spoiled.

The figures in Table LXXXV. show the kind of results obtained by this test. All the samples of oil tested were pure mineral oils, the first three being described as cylinder oils, and the last two as machine oils.

TABLE LXXXV.—FLASH-POINTS AND VOLATILITY COMPARED.

No.	Description.	Sp. Gr. at 60° F.	Flash-Point (Pensky-Martens) °F.	Loss of Weight in One Hour at 370° F.	
				In Air; 2 Litres per minute.	In Steam; 100 c.c. of Water condensed per hour.
				Per cent.	Per cent
1	American cylinder oil, . .	0·902	585°	0·12	...
2	" " " .	0·898	512°	0·54 0·56	0·70 0·46 0·68
3	" " " .	0·893	424°	4·18	...
4	American machine oil, .	0·897	402°	16·8 16·3	18·1 17·6
5	Russian machine oil, . .	0·909	380°	14·7 14·3	16·0 16·7

As the volume of steam passed over the oils in these experiments was about 8 per cent. in excess of the volume of air, the figures in the last two columns are not comparable. But if we assume the rate of evaporation to have been proportional to the volume of steam, and correct the results accordingly, the following numbers are obtained, which agree so closely as to show that the rate of evaporation in both steam and air is the same.

Average Loss per cent.	No. 2.	No. 4.	No. 5.
In air current, ...	0·55	16·55	14·50
In steam current of same volume (calculated), ...	0·57	16·32	15·04

It is evident that no simple relation exists between the volatility of an oil and the flash-point. It is true of the four American oils that as the flash-point falls the volatility increases; but the Russian oil flashing at 380° lost less by evaporation than the American oil flashing at 402°. The two oils flashing at over 500° F. both lost less than 0·6 per cent., though there is a difference of 73° F. in their flash-points; on the other hand, No. 3, which flashed 88° F. below No. 2, lost over 4 per cent., and No. 4, which flashed at only 22° F. lower still, lost over 16 per cent. (For some further results, see p. 384.)

F.—FREEZING-POINT, SETTING-POINT OR COLD TEST OF LUBRICATING OILS; CLOUD AND POUR POINTS.

The effect of cold upon lubricating oils is not the same as upon simple fluids such as water, glycerol, etc. The latter have fixed and accurately ascertainable freezing-points, at which a complete change from the liquid to the solid state takes place, but lubricating oils, which are mixtures of bodies of various melting-points, behave like solutions, and frequently deposit some portion of their constituents before the whole mixture solidifies. Thus, olive and lard oils deposit a solid fat, sperm oil deposits spermaceti, and some hydrocarbon oils deposit paraffin. The " setting-point " of an oil will, therefore, vary according to whether it be regarded as the temperature at which solid matter commences to separate, or the temperature at which the oil completely loses its fluidity. The " *cloud point* " or " *cloud test* " of Scotch and other mineral oils which contain paraffin is considered to be the temperature at which the separation of solid paraffin is observed to commence; this test is seldom made in the case of lubricating oils. Mineral oils which deposit no paraffin, such as Russian oils and American non-paraffin base oils, and all dark-coloured or opaque oils, which either deposit no paraffin or in which the separation cannot be seen, are considered to have reached their setting-point when they cease to flow. A temperature just above this is known as the " *pour point* " or " *pour test.*" The low setting-points of Russian oils and American non-paraffin base oils is characteristic, and serves to distinguish them from the Scotch, American, and other paraffin base oils; the former, when cooled, simply become more and more viscous until the setting-point is reached, whilst the latter become frozen into a solid crystalline mass at much higher and more sharply defined temperatures. Among vegetable lubricating oils, castor and almond oils have the lowest freezing-points.

Very erroneous conclusions regarding the setting-point of an oil may be formed unless sufficient *time* be allowed in making the test. This is especially true of fatty oils. Thus Salkowsky [1] found that a cod-liver oil, which remained perfectly clear when cooled for a short time to —15° C., became quite solid after several hours' exposure to —4° C. The subject has been more fully investigated by Holde.[2] The solidification of such oils is promoted by stirring, and by adding to the fluid oil a fragment of the same oil in a frozen state. Mineral oils assume their permanent state for any given temperature much more rapidly than the fatty oils, and they should not be stirred, as the network of solid hydrocarbons, which sometimes causes such oils to set before they have wholly solidified, is broken up by the stirring, and the setting-point is thereby lowered. Mineral lubricating oils frequently undergo a change in their setting-points by previous heating, and it is, therefore, important that the portion used for the setting-point determination should not have been recently used for any other test which has involved heating more than is necessary to redissolve any paraffin which may have separated from the chilled oil.

Determination of the Setting-Point.—Archbutt's Method, for determining approximately the temperature at which an oil ceases to flow, is carried out in a refrigerator (fig. 98), consisting of a flat-bottomed cylindrical leaden jar A, 6 inches in diameter, 14 inches in depth, contained in a wooden box B, measuring 12 inches square inside and 20 inches deep, made of wood about ¾ inch thick. The space between the jar and the box is filled with granulated cork, with 3 inches of cotton waste below the jar. To hold the cork in position and

---

[1] *Jour. Soc. Chem. Ind.*, vii. (1888), p. 37.

[2] *Ibid.*, ix. (1890), p. 112; also xv. (1896), pp. 138 and 160.

enable the leaden jar to be removed from the box, a cylinder made of galvanised sheet steel is fixed in the centre of the box, into which the leaden jar fits. The cylinder is open at the bottom and screwed through a flange to the bottom of the box; it is held in position by a perforated wooden partition at the top. The cotton waste is placed inside it and the granulated cork around it. The leaden jar is covered by a loose wooden lid, so placed as to leave about 3 inches of air-space above it. The box has a hinged lid.

The oils to be tested are poured to the depth of about 2 inches into stout walled glass tubes, 6 inches long by 1 inch internal diameter, and the tubes are corked. A similar tube containing a mineral lubricating oil of medium viscosity and very low setting-point (Russian oil, or American asphaltic base oil) is used to contain the thermometer, which passes through its cork and has its bulb immersed in the oil. About 6 inches in depth of crushed ice having been placed in the jar, the tubes of oil are immersed in the ice and left there for at least one hour. They are then taken out one by one and examined, and any oils which will not flow when the tube is held in a horizontal position and lightly tapped on the box are reported as having set in ice, or are placed aside for further experiment. The remainder are returned to the ice after this has been mixed, by thorough stirring, with sufficient powdered salt to lower the temperature about 5° F. The quantity to add is soon learned by experience. After twenty minutes' exposure to the lower temperature the tubes are again examined, any oils which have now set are taken out, and the temperature is read off on the thermometer. The addition of salt is repeated, and the gradual lowering of temperature with examination of the oils every twenty minutes is continued until the last oil has set, or until the temperature can be reduced no further. In this way the setting-point of an oil is ascertained within 5° F. A closer

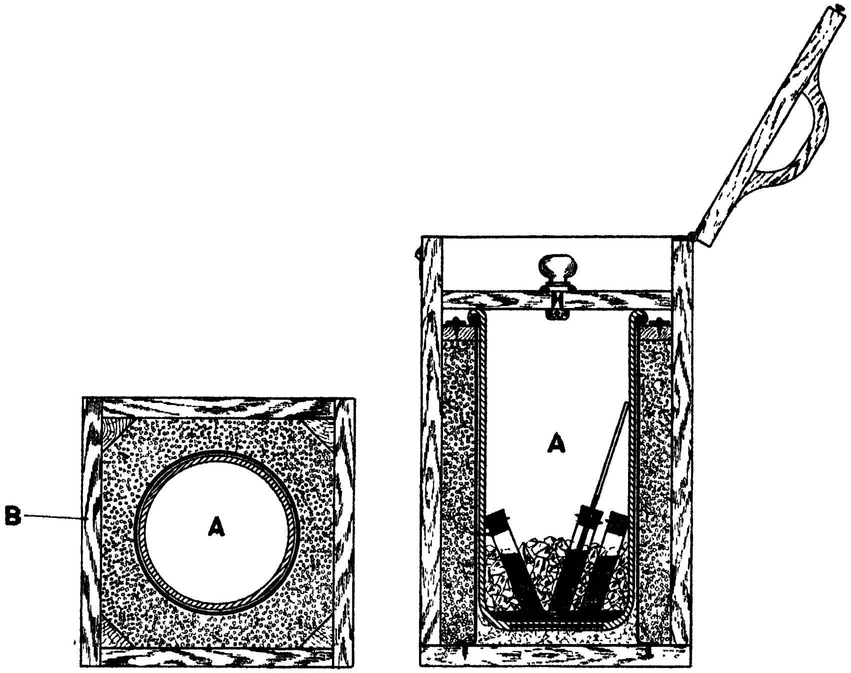

FIG. 98.

approximation can be made, if desired, by a second experiment, in which the temperature, when near the setting-point, is more gradually lowered. By the use of suitable freezing mixtures, temperatures as low as 10° to 12° F. can be obtained. The setting-points of oils which solidify at temperatures above that of melting ice may be ascertained by placing the tubes in water at the temperature of the laboratory, and then gradually lowering the temperature of this water by the addition of small quantities of ice until the setting-point of the oil has been reached. In some cases it is desirable to make the test in glass bottles measuring 1¾ inches diameter by 4½ inches high to the shoulder, filled to a depth of 2 inches with the oil. In these wider vessels, the behaviour of the oil at low temperatures can be more closely observed. Animal and vegetable oils must be stirred frequently, and the lowering of the temperature must be more gradual than in the case of mineral oils.

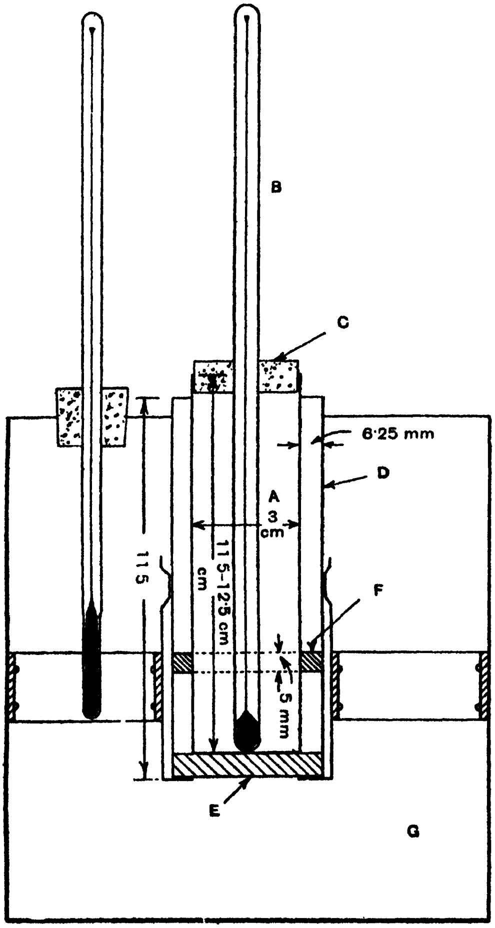

Fig. 99.

Cloud and Pour Points.—Standard Method.[1]—The test jar A (fig. 99) shall be of clear glass, cylindrical form, flat bottom, approximately 3 cm. in inside diameter and 11·5 cm. to 12·5 cm. high. An ordinary 4-oz. sample bottle may be used if the test jar is not available. The cork C shall fit the test jar, and shall be bored centrally to take the test thermometer B. This thermometer shall conform to the specification set out in detail in the official directions, and is marked "I.P.T. Cloud and Pour," with vendor's or maker's name and the N.P.L. monogram and year of test, and is supplied with the usual certificate of corrections. The jacket D shall be of glass or metal, shall be watertight, of cylindrical form, flat bottom, about 11·5 cm. deep, with inside diameter approximately 1·25 cm. greater than the outside diameter of the test jar. A disc of cork or felt, 6–7 mm. thick and of the same diameter as the inside of the jacket, is required. The ring gasket F shall be about 5 mm. thick, and made to fit snugly around the outside of the test jar and loosely inside the jacket. This gasket may be made of cork, felt, or other suitable material, elastic enough to cling to the test jar and hard enough to hold its shape. The purpose of the ring gasket is to

---

[1] Copied by permission from the book of *Standard Methods*, published by the Institution of Petroleum Technologists, 1924, I.P.T. Serial Designation—L.O. 11, on p. 54.

prevent the test jar from touching the jacket. The cooling bath G shall be of a type suitable for obtaining the required temperatures. The size and shape of the bath are optional, but a support suitable for holding the jacket firmly in a vertical position is essential. The required bath temperatures may be maintained by refrigeration if available, otherwise by suitable freezing mixtures.[1]

Method of Test.—(1) *Cloud Point.*—The oil to be tested shall be brought to a temperature at least 25° F. above the approximate cloud point. Moisture, if present, shall be removed by any suitable method, as by filtration through plaster of Paris or dry filter paper until the oil is perfectly clear, but such filtration shall be made at a temperature at least 25° F. above the approximate cloud point. The clear oil shall be poured into the test jar A to a height of not less than 2·5 cm., or more than 3 cm. The test jar may be marked to indicate the proper level. The test jar shall be tightly closed by the cork C, carrying the test thermometer B in a vertical position in the centre of the jar with the thermometer bulb resting on the bottom of the jar. The disc E shall be placed in the bottom of the jacket D, and the test jar, with the ring gasket F, 2·5 cm. above the bottom, shall be inserted into the jacket. The disc, jacket, and inside of jacket shall be clean and dry. The temperature of the cooling bath G shall be adjusted so that it is below the cloud point of the oil by not less than 15° F., nor more than 30° F., and this temperature shall be maintained throughout the test. The jacket containing the test jar shall be supported firmly in a vertical position in the cooling bath so that not more than 2·5 cm. of the jacket projects out of the cooling medium. At each test thermometer reading which is a multiple of 2° F., the test jar shall be removed from the jacket, quickly but without disturbing the oil, inspected for cloud and returned to the jacket. This complete operation shall require not more than three seconds. When such inspection first reveals a distinct cloudiness or haze in the oil at the bottom of the test jar, the reading of the test thermometer, corrected for error if necessary, shall be recorded as the cloud point.

(2) *Pour Point.*—The oil to be tested shall be brought to a temperature of 90° F., or to a temperature 15° F. higher than its pour point if this pour point is above 75° F. The oil shall then be poured into the test jar A to a height of not less than 5 cm. or more than 5·5 cm. The test jar may be marked to indicate the proper level. The test jar shall be tightly closed by the cork C, carrying the test thermometer B in a vertical position in the centre of the jar with the thermometer bulb immersed so that the beginning of the capillary shall be 3 mm. below the surface of the oil. The disc E shall be placed in the bottom of the jacket D and the test jar, with the ring gasket F, 2·5 cm. above the bottom, shall be inserted into the jacket. The disc, gasket, and inside of jacket shall be clean and dry. After the oil has cooled enough to allow the formation of paraffin-wax crystals, great care shall be taken not to disturb the mass of the oil nor to permit the thermometer to shift in the oil. Any disturbance of the spongy network of wax crystals will lead to low and fictitious results. The temperature of the cooling bath G shall be adjusted so that it is

---

[1] Mixtures commonly used are :—

For temperatures down to 35° F., ice and water.
,, ,, ,, −5° F., crushed ice and sodium chloride.
,, ,, ,, −25° F., crushed ice and calcium chloride.
,, ,, ,, −70° F., solid carbon dioxide and acetone.

The last-named mixture may be made as follows : In a covered metal beaker chill a suitable amount of acetone to 10° F., or lower, by means of an ice-salt mixture. Invert a cylinder of liquid carbon dioxide and draw off carefully into a chamois-skin bag the desired amount of carbon dioxide, which through rapid evaporation will quickly become solid. Then add to the chilled acetone enough of the solid carbon dioxide to give the desired temperature.

below the pour point of the oil by not less than 15° F., nor more than 30° F., and this temperature shall be maintained throughout the test. The jacket containing the test jar shall be supported firmly in a vertical position in the cooling bath so that not more than 2 cm. of the jacket projects out of the cooling medium.

At each test thermometer reading which is a multiple of 5° F., the test jar shall be removed from the jacket carefully and shall be tilted just sufficiently to ascertain whether the oil around the thermometer remains liquid. As long as the oil around the thermometer flows when the jar is tilted slightly, the test jar shall be replaced in the jacket. The complete operation of removal and replacement shall require not more than 3 seconds. As soon as the oil around the thermometer does not flow when the jar is tilted slightly, the test jar shall be held in a horizontal position for exactly five seconds and observed carefully. If the oil around the thermometer shows any movement under these conditions, the test jar shall be immediately replaced in the jacket and the same procedure shall be repeated at the next temperature reading 5° F. lower. In determining the pour point of oils, it shall be noted that the first movement of the oil in certain cases is not around the thermometer but from the sides of the test jar. In such cases, this movement shall be considered in making the test. As soon as a temperature is reached at which the oil around the thermometer shows no movement when the test jar is held in a horizontal position for exactly five seconds, the test shall be stopped. The lowest reading of the test thermometer, corrected for error if necessary, at which the oil around the thermometer shows any movement when the test jar is held in a horizontal position for exactly five seconds shall be recorded as the pour point. It shall be noted that the pour point is the temperature 5° F. above the solid point or temperature at which the test is discontinued.

Hofmeister's Method.—The special feature of this method is the use, as freezing liquids, of saline solutions of such strength that they are saturated at their freezing-points; such solutions when partially frozen remain constant in temperature until they have become entirely liquefied or solidified, and are thus very convenient for keeping the temperature of an oil constant for a length of time. The following solutions may be used:—

TABLE LXXXVI.—SALINE FREEZING SOLUTIONS.

Salt.	Parts of Salt per 100 parts of Water.	Freezing-points of the Solutions.	
		Fahr.	Cent.
Potassium sulphate, ...	10	28·6°	− 1·9°
Sodium carbonate crystals, . .	20	28·4°	− 2·0°
Potassium nitrate, ...	13	26·9°	− 2·85°
Potassium nitrate, ...	13	23·0°	− 5·0°
Sodium chloride, ...	3·3		
Barium chloride, ...	35·8	16·3°	− 8·7°
Potassium chloride, ...	30	12·4°	−10·9°
Ammonium chloride, ...	25	4·3°	−15·4°
Ammonium nitrate, ...	45	1·85°	−16·75°
Sodium nitrate, ...	50	0·05°	−17·75°
Sodium chloride, ...	33	−4·3°	−21·30°

A solution selected from the above list is placed in the vessel *a* (fig. 100), and about 4 c.c. of the oil to be tested are placed in one of the tubes *h* immersed in the solution. A freezing mixture of ice and salt is placed in the outer vessel *b*. As soon as the temperature of the solution in *a* has fallen to its freezing-point, if it does not commence to crystallise it is caused to do so by stirring, or by dropping in a small portion of the same solution which has been previously frozen in a test-tube. The temperature of the liquid in *a*, and therefore of the oils in tubes *hh*, will now remain constant so long as the liquid remains only partially frozen, and to maintain it in this condition and prevent complete solidification from taking place, all that is necessary is to lift the vessel *a* out of the freezing mixture, occasionally, for a few minutes. After the lapse of one or two hours, the tubes of oil are lifted out of the bath, and any oils which do not flow on inclining the tubes are considered to have set at the temperature of the bath. The remainder are then tested in a solution freezing at a lower temperature. The standard liquids are preserved for use in stoppered bottles. This is a scientific method for determining accurately the effect on oils of prolonged exposure at low temperatures.

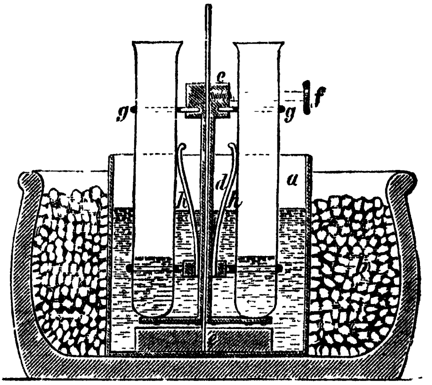

FIG. 100.

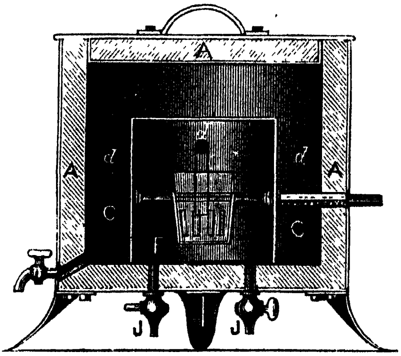

FIG. 101.

Schultz's Method.—In this method, used in Germany, the oil is cooled until of such consistency that when subjected to a fixed pressure in a tube of specified diameter it will flow at a definite minimum speed. The oil to be tested is introduced into a glass U-tube, 6 mm. in internal diameter, which is filled to a depth of 30 cm. in each limb. Several such tubes, supported by a suitable stand, may be cooled together in a solution of known freezing-point, as in Hofmeister's method, the time of cooling being one hour. Each tube in succession is then connected by its longer limb with a manometer, and by opening a pinch-cock a pressure equal to 50 mm. of water is caused to act upon the oil. A specification of the Prussian State Railways stipulated that the oil when thus tested after cooling for one hour at a temperature of −15° C. in winter, or −5° C. in summer, must flow in the tube at a minimum rate of 10 mm. per minute.

Tagliabue's Standard Oil Freezer (fig. 101), used in the United States, is semicircular in shape, with a flat side. It consists of an inner chamber F, surrounded by an ice-chamber C, with a non-conducting jacket A, filled with asbestos. The oil is contained in a glass cup, 4 inches in depth and 3 inches in diameter, which is fixed upon a rocking shaft by means of which the cup can be tilted and the condition of the oil seen. A thermometer is immersed in the oil, and two others register the temperature of the ice chamber. Two stopcocks connected to the inner chamber are for the introduction of warm air, if it is desired to raise the temperature, and the tap at the side is for draining away the liquefied ice. A glass window in the flat side enables the oil to be observed.

TABLE LXXXVII.—APPROXIMATE FREEZING-POINTS OF SOME VEGETABLE AND ANIMAL OILS.

Oil.	°F.	°C.
Arachis (earthnut),	+37 to +27	+ 3 to − 3
Beechnut,	+ 1	−17
Ben,	+48 to +32	+ 9 to 0
Brazil nut,	+37 to +32	+ 3 to 0
Cameline,	±0	−18
Candlenut,	Below ± 0	Below −18°
Castor,	+14 to ± 0	−10 to −18
Cod-liver,	+32 to +14	0 to −10
Cottonseed,	+39 to below 32	+ 4 to below 0
Curcas,	+37 to +18	+ 3 to − 8
Hazelnut,	+14 to − 4	−10 to −20
Hempseed,	+ 5 to −18	−15 to −28
Lard oil,	+42 to +25	+5·5 to − 4
Linseed,	+ 3 to −17	−16 to −27
Maize,	+14 to − 4	−10 to −20
Menhaden,	+25	− 4
Mustard,	+ 3 to ± 0	−16 to −18
Neatsfoot,	+50 to +32	+10 to 0
Nigerseed,	+16	− 9
Olive,	+50 to +21	+10 to − 6
Poppyseed,	+ 3 to − 2	−16 to −19
Porpoise,	+ 3	−16
Rape,	+28 to +10	− 2 to −12
Ravison,	+18	− 8
Seal,	+28 to +27	− 2 to − 3
Sesamé,	+25 to +21	− 4 to − 6
Soja bean,	+46 to +59	+ 8 to +15
Sunflower,	+ 3 to − 2	−16 to −19
Tung,	Below + 1	Below −17
Walnut,	+10 to −18	−12 to −28

TABLE LXXXVIII.—FREEZING-POINTS OF MINERAL LUBRICATING OILS.

Description.	Freezing-point.
Cylinder oils,	35° to 80° F. (2° to 27° C.)
Heavy engine and machinery oils } From paraffin base crudes	20° to 30° F. (−7° to −1° C.)
Light machinery and spindle oils } From paraffin base crudes	10° to 25° F. (−18° to −4° C.)
Oils from asphaltic base crudes, and Russian oils,	Many of these oils remain fluid and transparent at and below zero F. (−18° C.).

G.—MELTING-POINTS OF FATS AND LUBRICATING GREASES.

Melting- and Solidifying-Points of Fatty Acids.—In the melting of natural fats, mixed fatty acids, lubricating greases, etc., the same phenomena present themselves as are observed in the setting or solidifying of oils, viz.: that, as we are dealing with mixtures, the temperature of incipient fusion, at which some portion of the substance becomes fluid, and the temperature of complete fusion, at which the whole has liquefied, are not, as a rule, the same. It has also been observed that the melting-points of fats and fatty acids may be profoundly modified by previous heating of the melted substance. Thus, Clague found that the melting-point of cacao-butter, originally 75° F., was raised to 86° F. by keeping the melted fat at a temperature just under 100° F. for two hours. A temporary change in the melting-point usually occurs immediately after the substance has been melted and resolidified. Thus Bevan [1] found that a crystallised fat obtained from lard, which had been melted in a test-tube and then caused to solidify rapidly by chilling in cold water, remelted at a temperature about 15° below the first melting-point; on gradually raising the temperature, the fat resolidified and regained its normal melting-point. In consequence of such facts as the above, the temperatures recorded as the melting-points of fats and fatty acids by different observers, using different methods of preparation and manipulation, unfortunately present discrepancies which will not be removed until some uniform system of testing has been agreed upon.

In the examination of lubricants, the object of a melting-point determination may be twofold. Firstly, a knowledge of the melting-point of a fat or lubricating grease may be required for the purpose of ascertaining its behaviour under the practical conditions of lubrication; and secondly, the melting- or solidifying-point of a fatty acid or of a mixture of fatty acids may be required as a means of identifying the oil or fat from which the fatty acid or mixture has been obtained.

Preparation of the Substance.—Whatever method be employed, certain precautions must be observed in the preparation of the substance, chief of which are the following:—

(1) Except in the case of lubricating greases and other manufactured products which may contain water as an ingredient, intentional or otherwise, of the mixture, every trace of moisture present must be removed. Having melted the substance in the water-oven and allowed all visible water to settle out, the fat or oil is poured off, and the remaining traces of moisture are got rid of either by filtering through dry filter paper or by further heating in the water-oven until a cold glass placed over the beaker no longer becomes dimmed by condensed water-vapour. Lubricating greases, in which water may be present as an essential constituent, must, of course, be tested without any previous preparation.

(2) In melting fats or fatty acids, previous to the determination of the melting-point, the temperature should not be raised higher, and the heating should not be continued longer, than is absolutely necessary.

(3) Sudden chilling to hasten resolidification must not be resorted to. The substance must be allowed to solidify naturally. If the temperature of the room be above the solidifying-point, the substance should be placed in a sufficiently cool cupboard or a refrigerator, and after solidification has taken place, at least an hour or two, and in most cases from twelve to twenty-four hours, should be allowed to elapse before the determination of the melting-point is undertaken.

Determination of Melting- and Solidifying-Points.—Pohl's Method.—By this method the temperature of incipient fusion, at which a substance begins to

---

[1] *Analyst*, xviii. (1893), p. 286.

melt, is determined. The bulb of a thermometer T (fig. 102) is dipped into the melted substance and removed with a coating of the substance adhering to it. After this has solidified, and has remained for a sufficient length of time to acquire its normal melting-point, the thermometer is fixed, by means of a cork, in a long boiling-tube C, the bulb of the thermometer being placed about ½ inch above the bottom of the tube. A groove is cut in the side of the cork for the escape of air. The tube is then supported in the clamp of a retort stand, about 1 inch above a disc of sheet iron or asbestos, which is heated by means of a small flame so that the temperature rises very gradually. The moment a drop of liquefied fat is observed to collect at the lower part of the thermometer bulb, the temperature is read off and is recorded as the melting-point. This is a good method for the examination of tallow and other fats. It has been elaborated by Ubbelohde.[1]

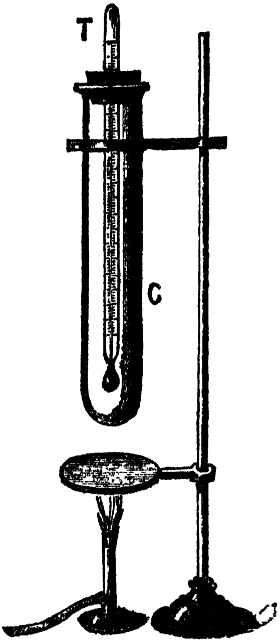

Fig. 102.

Stock's Method for Greases.—The following modification of Pohl's method has been recommended by Stock for ascertaining the melting-points of lubricating greases.[2] A clean, narrow test-tube is fitted over the lower end of a thermometer, by means of a band of stout india-rubber tubing, the annular space between the walls of the tube and the thermometer not exceeding $\frac{1}{16}$ of an inch. The narrow test-tube is fixed, by means of a cork, within a wider and longer tube. A small quantity of the sample to be tested is taken upon the bulb of the thermometer, which is then carefully inserted into the inner tube, down to within half an inch of the bottom. The wider tube is then immersed in a beaker of either water or clear lard oil (according to the melting-point of the grease) and is heated on a disc of asbestos millboard supported over an Argand-Bunsen. By bringing the tube up to the side of the beaker, the temperature at which the mass flows down to a clear bead at the bottom of the tube may be observed by means of a hand-lens if necessary. This is recorded as the melting-point of the sample.

Methods for Axle Greases.—1. A method which the authors have found convenient for observing the behaviour of axle greases when heated, as well as the temperature of melting, is carried out by placing about 10 grms. of the grease in a cone made of wire gauze having 20 meshes to the linear inch. The gauze cone fits into a glass funnel, about 2⅜ inches diameter, with ground edge, which is covered by a ground glass plate, slightly greased so as to prevent evaporation of water from the sample under test, and supported in a beaker, the stem of the funnel dipping into a little oil at the bottom of the beaker. The whole is placed in a small air-oven, the door of which is replaced by a glass plate, so that the behaviour of the grease can be observed. The temperature of the oven is raised very slowly, in small stages, by means of a small gas flame (about 30° F. per hour at first, falling to about 20° F. per hour towards the end of the test), and the temperature is noted at which the grease commences to melt and run through the gauze. This temperature

---

[1] *Z. angew. Chem.*, **1905, 18, 1220**; *Jour. Soc. Chem. Ind.*, **xxiv. (1905), p. 941.**

[2] *Analyst*, **xiv. (1889), p. 2.**

is then maintained as constant as possible, and it will be seen whether the grease melts as a whole or whether oil runs through and leaves soap on the gauze. The test usually occupies several hours, but the information gained is valuable, and the amount of personal attention needed is not great. The range of temperature over which the melting takes place is recorded as the melting-point of the grease.

2. *Great Western Railway Method.*—The apparatus used (see fig. 103) consists of a glass tube, 1 inch diameter and 2½ inches long, having a stem ¼-inch internal diameter and 3 inches long, supported in a wide-necked bottle by means of a cork with a vent, as shown. The wide part of the tube is filled with grease, so that the lower surface of the grease is about half-way down the shoulder and as level as possible, and the tube is then closed with a vented cork. The apparatus is placed in a glass-fronted water-oven, adjusted to a temperature of about 90° F., and kept at that temperature for at least one hour, the flame is then increased so that the temperature rises steadily at the rate of about 10° F. per hour. The temperature at which the grease softens sufficiently to sink to the top of the narrow tube is recorded as the "softening-point"; the range of temperature during which the grease flows completely out of the tube into the bottle, commencing from the temperature at which it has flowed one inch into the narrow tube, is recorded as the "melting-point."

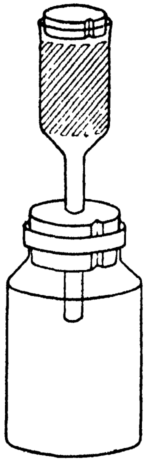

FIG. 103.

Capillary Tube Method.—This simple method of determining the point of incipient fusion is frequently used for the examination of fatty acids and other substances of fairly definite, and not too low, melting-point. There are several ways of operating, but the following is one of the most convenient. The capillary tubes, which are made by drawing out soft glass tubing, should be very thin-walled, about 10 cm. long and 1 mm. in internal diameter. They are left open at both ends. One end is dipped into the melted substance, until enough has risen to fill about 1 centimetre of the tube, which is then laid aside in a cool place for several hours, preferably overnight, for the substance to solidify and regain its normal melting-point. The other end of the tube is then held for a moment in a small flame and, while hot, is pressed against a small bar of wood W (fig. 104), coated with sealing-wax, by which means four or more of such tubes may be supported in a beaker of water as shown in the sketch. The beaker is placed upon a disc of asbestos millboard over a burner, and a thermometer T, held by a clamp or suspended by a cord, is placed with its bulb close to the filled ends of the capillary tubes. The water in the beaker is then slowly warmed up and continually stirred by the glass stirrer S, and the temperature at which the substances melt and rise up the capillary tubes are recorded. The mean of two experiments in separate tubes, which should closely agree, is taken as the melting-point of the substance. In examining mixed fatty acids, it is frequently noticed that a portion will liquefy and run up the tube, leaving the remainder still solid behind. Clague found that the melting-point of cacao-butter determined in a capillary tube varied according to the diameter of the tube.

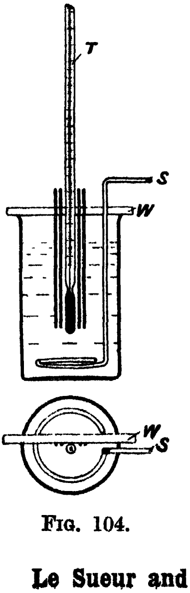

FIG. 104.

Le Sueur and Crossley's Method.[1]—A small quantity of the substance is

---

[1] *Jour. Soc. Chem. Ind.*, xvii. (1898), p. 988.

placed at the bottom of a thin-walled tube A (fig. 105), measuring, say, 75 mm. long by 7 mm. wide. A fine capillary tube B, open at both ends and not more than 0·75 mm. in diameter, is placed in the tube with one end in the substance. The whole is attached to the stem of a thermometer by two rubber bands CC and placed in a beaker of cold water, which is slowly heated and continually stirred. The temperature at which the liquid is seen to rise up the capillary tube is noted as the melting-point of the fat. Provided the temperature of the water bath is raised very slowly, the indication is extremely sharp, and agrees well with the results obtained by the ordinary capillary tube method.

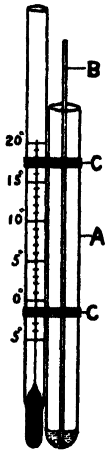

Fig. 105.

Bensemann's Method,[1] which is sometimes preferable, determines two points, viz.—the temperature of incipient fusion and the temperature of complete fusion. A piece of narrow thin-walled tubing is drawn out to a capillary point and sealed at the small end. A small portion of the substance is then melted in the wider portion of the tube, in the position shown at A *a* (fig. 106), and is allowed to solidify. After a sufficient interval the tube is attached, by means of two small india-rubber rings cut off a piece of tubing, to a thermometer, with the fat close to the bulb, and the thermometer is supported vertically in a beaker of water. The water is slowly warmed up, with continual stirring, until some of the fat begins to flow; the temperature observed at this point is the "*point of incipient fusion.*" When the substance has melted to a perfectly clear and transparent liquid, as shown at *b* (fig. 106), the temperature is again read off and is the "*point of complete fusion.*"

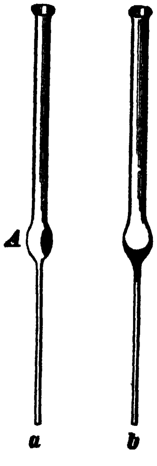

Fig. 106.

Bach's Method.—Bach and Hübl have published a number of melting- and solidifying-points of fatty acids which were ascertained in the following way. The substance was brought into a test-tube about 7 mm. in diameter, and whilst being stirred gently with a thermometer, the temperature was noted at which the mass became quite clear ("*melting-point*"), and that at which a cloudiness began to form ("*solidifying-point*").

Cook's Method.[2]—This is a modification of T. Redwood's method.[3] Two beakers are supported one within the other, the minimum space between them being 1 inch at the sides and 1½ inches at the bottom. About 1 inch in depth of mercury is placed in the inner beaker. The outer beaker contains either water or melted paraffin (according to the temperature required), the surface of which must be at least 3 inches above the surface of the mercury. Minute fragments of the substance whose melting-point it is desired to determine are placed on a small piece of ferrotype-plate (with the varnish removed), or on a microscope cover-glass, and floated on the surface of the mercury, in which the bulb of a thermometer is immersed. The beaker is covered with a card. The water or paraffin in the outer beaker is then slowly heated up with frequent stirring, until the substance is observed to melt; it is then allowed to cool, and the solidifying-point may be read off. This method is said to give closely concordant results.

Dalican's "Titer Test."—This test, which was devised by Dalican for the

---

[1] *Jour. Soc. Chem. Ind.*, iv. (1885), p. 535.
[2] *Proc. Chem. Soc.*, xiii. (1897), p. 74.
[3] *Analyst*, i. (1877), p. 51.

valuation of tallow by determining the solidifying-point of the mixed fatty acids, has been applied by Lewkowitsch to a large number of oils and fats. The fatty acids, obtained from 100 grms. of fat by the method described on p. 315, perfectly dried by filtration through paper in the water-oven and allowed to solidify overnight, are remelted at as low a temperature as possible and introduced into a stout-walled test-tube, measuring 7 inches long by 1⅝ inch diameter, which is filled rather more than half full. The tube is supported, by means of a cork or rubber ring, in a wide-mouthed bottle of colourless glass (see fig. 107), and a Centigrade thermometer, graduated, say, from 0° to 70°, in fifths of a degree, is suspended with its bulb in the centre of the fatty acids. As soon as crystals begin to appear at the bottom of the tube, the fatty acids are stirred by giving the thermometer a rotary movement, first thrice to the right, then thrice to the left, and then continuously in one direction, without touching the sides of the tube, but taking care that the whole mass is kept uniformly mixed. When the mixture becomes turbid throughout, the mercury is watched closely. At first it will fall slowly, but at a certain point it will rise a few tenths of a degree, sometimes 2 or 3 degrees, and will then remain stationary for a short time before commencing to fall again. The point at which it remains stationary is the "*titer*" or solidifying-point of the fatty acids. Freundlich states (*Analyst*, 1900, p. 105) that the temperature to which the thermometer finally rises is partly dependent upon that to which it was made to fall during the stirring of the fat, and that to ensure concordant results too prolonged stirring must be avoided in making this test.

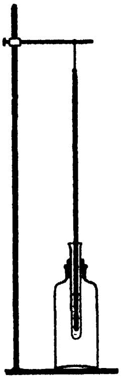

FIG. 107.

TABLE LXXXIX.—MELTING-POINTS OF SOME FATS, WAXES, ETC.

Description.	Name.	Melting-points.	
		°F.	°C.
Fats.	Bone fat, ...	69·8– 71·6	21 – 22
	Coconut oil, . . .	73·4– 80·6	23 – 27
	Cottonseed stearin, . .	78·8–104	26 – 40
	Horse fat, ...	107·6–109·4	42 – 43
	Japan wax, . . .	122·7–132·8	50·4– 56
	Lard, ...	86 –118·4	30 – 48
	Palm oil, ...	80·6–108·5	27 – 42·5
	Palm nut oil, . . .	73·4– 86·0	23 – 30
	Tallow (beef), . . .	107·6–119·3	42 – 48·5
	„ (mutton), . .	111·2–120·2	44 – 49
Waxes.	Beeswax, ...	143·6–150·8	62 – 66
	Carnauba wax, . .	181·4–186·8	83 – 86
	Spermaceti, . .	105·8–114·8	41 – 46
	Wool fat (neutral), . .	87·8–108·5	31 – 42·5
Hydrocarbons.	Ceresin (refined ozokerit),	142 –172	61 – 78
	Paraffin wax, . . .	99 –168	37 – 76
	Petroleum jelly (pale), .	102 –123	39 – 51
	„ „ (dark), .	91 –104	33 – 40

TABLE XC.—MELTING- AND SOLIDIFYING-POINTS OF SOME MIXED FATTY ACIDS.

Class.	Mixed Fatty Acids from	Melting-points °C.			Solidifying-points °C.	
		Bensemann's Method.				
		Point of Incipient Fusion.	Point of Complete Fusion.	Other Methods.	Various Methods.	'Titer Tests,' (mostly by *Lewkowitsch*).
Vegetable Non-drying Oils and Fats.	Arachis (earthnut) oil,	..	..	27–34	22–32·5	29·2
	Ben oil, ...	..	..	..	..	37·8
	Castor oil, . . .	..	..	13	2–3	..
	Coconut oil, . .	..	..	24–27	15·7–20·4	22·5–25·2
	Cottonseed stearin .	..	..	27–30	21–23	35–41
	Hazel nut oil, . .	..	..	17–25	9–20	..
	Japan wax . . .	..	..	54–62	53–56 5	59·4
	Olive oil, . . .	..	..	24–27* 19–31†	17–24·6	17·15–26·4 (12 samples)
	Palm oil, . .	..	..	41–50	..	35·9–47·6‡
	Palm nut oil, . .	..	..	20·7–28 5	..	20·5–25·5
Vegetable Semi-drying Oils.	Brazil nut oil, . .	..	..	28–30	..	32·3
	Cameline oil, .	..	..	18–20	13–14	..
	Cottonseed oil. . .	39–40	42–43	34–40	30·5–36	32 0–35·2
	Curcas oil. . . .	..	..	24–28	..	28·6
	Maize oil, . . .	..	..	18–22	14–16	19·0
	Mustard oil, . . .	..	..	15–17	15 5	..
	Rape oil, . . .	18–19	21–22	16–21	10·5–18·5	12·2–13·6 (18·5)§
	Ravison oil, . .	..	..	..	..	Below 0° §
	Sesamé oil, . . .	25–26	29–30	21–32	18·5–28·5	22·9–23·8
	Soja bean oil, . .	..	..	27–29	23–25	21·2
Vegetable Drying Oils.	Candlenut oil, . .	..	..	20–21	13	..
	Hempseed oil, . .	..	..	17–19	14–16	16·6
	Linseed oil, . . .	..	..	below 13–24	13 3–17·5	19·4–20·6
	Nigerseed oil, . .	..	..	25–27	..	..
	Poppyseed oil, . .	..	..	20–21	16·5	16·2
	Sunflower oil, . .	..	..	17–24	17–18	..
	Tung oil, . . .	..	..	30–44	31–34	37·2
	Walnut oil, . . .	..	..	15–20	16	..
Animal Oils and Fats.	Bone fat, . .	..	..	30	28	..
	Horse fat, . . .	..	..	37·5–39·5	37·3–37·7	38·7
	Horsefoot oil, . .	..	..	..	..	28·6
	Lard, ...	43–44	46–47	35–44	32·5–39	42
	Lard oil, . . .	..	..	33 2–38·4	..	27–33‖
	Neatsfoot oil, . .	..	..	28·5–30·8	26·1	26·5
	Tallow (beef), . .	42–44	45–47	45	..	38·3–46·3
	,, (mutton), . .	49–50	53–54	46–49	39–41	41·5–48·3
Marine Animal Oils and Fluid Waxes.	Cod-liver oil, . . .	..	..	..	..	13·9–24·3
	Sardine oil (Japanese), .	..	..	35·4–36·2	..	28·2
	Seal oil, ...	..	..	22–23	..	15·9
	Sperm oil, . . .	..	..	13·3–21·4	12·4–16·1	11·9
	,, ,, (Arctic), .	..	..	10·3–16·4	10	8·8
	Whale oil, . . .	..	..	14–18¶	..	23·9
Wax(solid).	Wool fat, . . .	..	..	52·6	..	..

* 203 samples by Negri and Fabris.

† All observers: the extreme values (highest and lowest) obtained with Californian oils.

‡ Includes the 16 samples by Tipler on p. 152.

§ Aichbutt.

‖ Jenkins (46 samples of commercial oil).

¶ 27° Jean.

H.—DEMULSIFICATION TESTS.

Lubricating oils used in forced feed circulation systems, as in the lubrication of steam turbines, enclosed type high-speed steam-engines, etc., become mixed with condensed and leakage water, and unless this water separates readily and quickly from the oil, emulsions are formed which are liable to cause choking of the feed pipes and serious interference with the lubrication. They also lead to loss of oil, as the watery emulsion which must be drawn off carries oil with it. Vegetable and animal oils persistently emulsify when shaken with water, so that it would be impossible to use these oils in circulation systems, even if it were desired to do so. Mineral lubricating oils do not emulsify so readily, but even these oils are liable to form very troublesome emulsions, and it is, therefore, necessary to test all mineral lubricating oils used under conditions where this property would cause trouble.

A simple test may be made by taking equal volumes, say 50 c.c. each, of the oil and water, in an 8-oz. bottle about 2 inches in internal diameter, heating to 80° C. or 180° F., corking the bottle, and shaking vigorously by hand or in a shaking-machine for 10 minutes, and then allowing to stand. Some mineral oils will separate from the water rapidly and completely, others will form an emulsion which breaks up quite slowly.

The importance of this test, and the desirability of obtaining a quantitative measure of the emulsifying property of oils, has led to much investigation, and the subject has been discussed at length in papers by Arnold Philip,[1] W. H. Herschel,[2] and others.

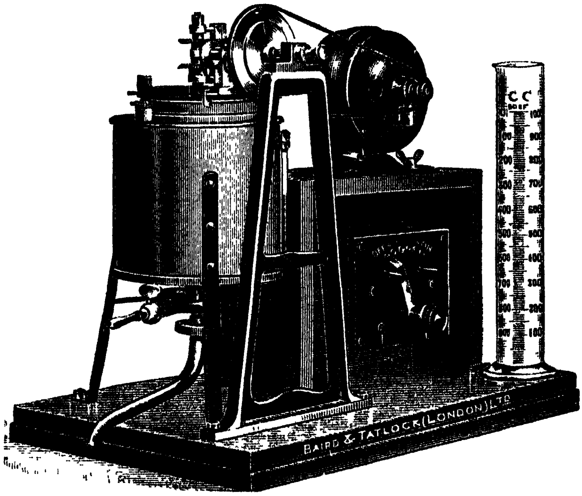

FIG. 108.

Philip's Test.—Philip has designed an apparatus[3] (see fig. 108) in which equal volumes of the oil and water are churned together at a temperature of 100° C. (212° F.), by means of a motor-driven stirrer revolving at 350 to 400 revolutions per minute. After five minutes' agitation, the churned mixture is poured into a previously warmed, graduated, litre glass cylinder, and set aside for twenty-four hours. The percentage of the original volume of oil which has then separated from the water is termed by Philip the ***demulsification value*** of the oil. Owing to unavoidable loss in transferring the oil, 98 is the maximum value obtainable in the test. Philip remarks that "as far as the use of a mineral lubricating oil for turbines is concerned, the determination of the demulsification value is of greater use than any other test which can be made. . . . Out of between 700 or 800 samples of such oils which have been tested and passed as satisfactory, as possessing demulsification values of 90 per cent. or over, not a single one has given any trouble whatever due to

---

[1] *Jour. Soc. Chem. Ind.*, 34 (1915), 697–700.
[2] *Technologic Paper*, No. 86 (1917), *of the Bureau of Standards, U.S.A.*
[3] Obtainable from Messrs. Baird & Tatlock, London.

the formation of emulsions under the practical conditions of use on a forced lubrication system on steam turbines."

Herschel's Test.—20 c.c. of oil and 40 c.c. of distilled water are placed in a 100 c.c. graduated cylinder of internal diameter 26 mm., and heated in a water bath to 55° C. (131° F.). The liquids are stirred in the cylinder for 5 minutes with a motor-driven paddle, consisting of a metal plate 89×20×1·5 mm., submerged in the liquid and revolving at 1500 r.p.m. The paddle is then lifted out, and the cylinder allowed to stand at a temperature of 55° C. for one hour. The volume of oil which has separated from the water is read off after one minute, and at further intervals during the hour, and the maximum observed rate of separation is termed by Herschel the *demulsibility* of the oil. Supposing, for example, that 20 c.c. of oil has separated in the first minute, the demulsibility would be $20 \times 60 = 1200$, which is the maximum possible.

Demulsification Number. I.P.T. Standard Method.[1]—The Institution of Petroleum Technologists has adopted the method which is here given in an abbreviated form.

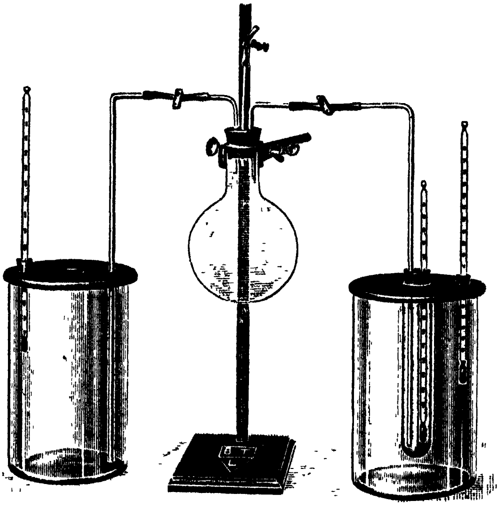

FIG. 109.

Definition.—The Demulsification Number is the number of minutes required for an oil to separate when emulsified and separated under definitely prescribed conditions.

Method.—20 c.c. of the oil are placed in a 200×25 mm. glass tube, graduated in cubic centimetres. This is fixed in the lid of the vessel shown on the right hand in fig. 109, which contains about 3 litres of water, brought to a temperature of 67° F. (19·4° C.) at the commencement of the test and not controlled thereafter. The cork and thermometer having been fitted into the tube, with the bottom of the bulb of the thermometer 2 to 2½ cm. from the bottom of the tube, dry steam from boiling water in the flask is blown through the oil at such rate as to maintain the temperature between 190° and 195° F., as shown by the thermometer in the oil. The oil usually reaches this temperature in from 45 to 75 seconds after commencing to blow steam. The current of steam is controlled by means of the pinch-cocks, and the steam is generated

---

[1] For full details see *Standard Methods*, published by the Institution of Petroleum Technologists, 1924, p. 57.

fast enough to cause a generous discharge from the central tube into the air. Steaming is continued until the volume of condensed water and oil in the graduated tube is 40 ± 3 c.c. (The apparent volume will be 12 to 15 c.c. greater than the actual volume, due to displacement caused by steam, thermometer, and delivery tube.) The time required for the operation should be from 4 to 6½ minutes. If the condensed water amounts to 20 c.c. in less than 4 minutes, the test must be re-run.

The steam delivery tube having been withdrawn, the tube containing the oil and water is at once removed to the vessel shown on the left-hand side of the figure, which contains water at 200–203° F. A stop-watch is started at the moment of removal of the tube. The water bath is maintained, accurately, at the temperature stated. The cork and thermometer are removed from the oil tube, and the volume of oil which has separated from the water is recorded at half-minute intervals until 20 c.c. of oil has separated, or until 20 minutes, and no longer, have elapsed. The test is then completed. No distinction is made between clear and turbid oil. If the interface between oil and water is not a clear horizontal line, the position of such line is estimated to the nearest 0·5 c.c. At the end of 20 minutes, and not before, if there is still no well-defined interface, the liquid may be gently stirred for two seconds with a clear glass rod.

Interpretation.—In interpreting results, the assumption is made that the rate of emulsion separation is directly proportional to the resistance of the oil to emulsification. A definite value of 1 is assigned to an oil which separates from the water completely in 1 minute. The expansion of the oil is disregarded; the time is recorded when 20 c.c., and not necessarily all of the heated oil has separated, when this occurs in less than twenty minutes.

I.P.T. Demulsification Number.—The standard directions specify that "results shall be reported, in minutes and half-minutes, of the time necessary for complete (20 c.c.) oil separation. The time in minutes and half-minutes shall be reported as the 'Demulsification Number, I.P.T. Method.' In cases where the required volume shall not have separated in 20 minutes, the oil shall be reported as having a Demulsification Number of '20 plus.' If duplicate determinations vary by more than one minute, a third test shall be made and the average of the three tests reported."

I.—REFRACTIVE INDEX.

In the analysis of lubricating oils, the refractometer has only a limited application. The kind of instrument employed may be one, such as Abbé's, in which the index of refraction (n_D) of the oil is directly measured. A refractometer of this pattern fitted with a constant temperature arrangement is recommended for commercial work by Harvey,[1] who states that the readings obtained by a practised observer are concordant within 0·0002 degree. The necessity for working at constant temperature, or for correcting to constant temperature, is shown by the fact that the refractive index varies (approximately) inversely as the temperature. The correction, according to Richmond,[2] amounts to 0·00038 per degree Centigrade, this quantity being added per degree in passing from a higher to a lower, or deducted in passing from a lower to a higher temperature. The refractive indices of a number of oils and fats and their insoluble fatty acids, as determined by various observers, are given in Table XCI. (p. 278).

The Zeiss butyro-refractometer is much more generally employed than Abbé's instrument, and although expressly designed for the examination of

---

[1] *Jour. Soc. Chem. Ind.*, xxiv. (1905), p. 717.

[2] *Analyst* (1907), p. 44.

TABLE XCI.—REFRACTIVE INDICES OF OILS, ETC.

Class.	Name of Oil, etc.	Refractive Indices					
		of Oils, Fats, etc., at					Of Insoluble Fatty Acids at 60° C.
		15° C.	15·5° C.	20° C.	25° C.	60° C.	
Vegetable Non-drying Oils and Fats.	Arachis (earth-nut) oil,	1·4731	1·4707-1·4731	1·4698	..	1·4545-1·4554	1·4461
	Castor oil, . .	1·4795-1·4803	..	1·4783-1·4789	..	1·4636-1·4647	1·4546
	Coconut oil, .	..	1·4587	..	..	1·4410	1·4295
	Olive oil, . .	1·4698-1·4715	1·4703-1·4718	1·4670-1·4705	..	1·4546-1·4548	1·441 -1·446
	Oilve kernel oil,	..	..	..	1·4682-1·4688	..	..
	Palm oil, . .	..	..	..	..	1·4510	1·4441
	Palm kernel oil,	..	..	..	..	1·4431	1·4310
Vegetable Semi-drying Oils.	Cottonseed oil, .	1·4743-1·4752	1·4737-1·4757	1·4722	..	1·4570-1·4586	1·4460
	Curcas oil, . .	..	..	..	1·4681-1·487	..	..
	Maize oil, . .	1·4765	1·4760-1·4768	1·478	..	1·4765	..
	Mustard oil, .	..	1·4750-1·4762	1·4742-1·4752	..	..	..
	Rape oil, . .	1·4720-1·4757	1·4748-1·4752	1·4722-1·4742	..	1·4585-1·4667	1·4491
	Sesamé oil, .	1·4746-1·4762	1·4742	1·4727-1·4730	..	1·4561-1·4580	1·4461
Vegetable Drying Oils.	Linseed oil, .	1·4835-1·488	..	1·4800-1·4812	..	1·4657-1·4660	1·4546
	Poppyseed oil, .	1·4773	1·4766-1·4770	1·4749-1·4754	..	1·4586	1·4506
	Sunflower oil, .	..	1·4736-1·4739	..	..	1·4611	1·4531
	Tung oil, . .	..	..	1·503 at 19°	..	..	..
	Walnut oil, .	1·4804	..	..	..	..	..
Animal Oils and Fats.	Lard oil, . .	..	1·4692-1·4720	..	..	..	..
	Neatsfoot oil, .	1·473	..	1·4677-1·4687	..	1·4559	..
	Tallow (beef), .	..	..	..	..	1·4510	1·4375
	,, mutton,	..	..	..	..	1·4501	1·4374-1·442
Marine Animal Oils and Fluid Waxes.	Cod-liver oil, .	1·4788-1·4852	1·4783-1·4814	1·4769-1·4825	..	1·4621-1·4659	1·4521-1·4645
	Dolphin oil, .	1·4708	..	1·4682	..	..	..
	Sardine oil (Japanese),	1·479	..	1·4802-1·4808	..	..	..
	Seal oil, . .	1·4784	..	..	..	1·4619	..
	Sperm oil, . .	1·4675	..	1·4646-1·4655	..	1·4508	..
	Whale oil, . .	1·476	..	1·4762	..	1·4603	..
Miscellaneous.	Rosin oil, . .	..	..	1·5274-1·5415	..	..	..
	Mineral oil, .	1·4759-1·477	..	1·4776-1·4980	..	1·4606	..

butter, the refractive indices of most oils and fats can be ascertained by means of it, though the simple scale readings of the instrument are all that is usually required. The broadening and colouring of the critical line, owing to dispersion, makes it difficult to read accurately some oils with this instrument, but this difficulty can be avoided by using sodium light or filtering the rays through a potassium bichromate cell. The table below, supplied with the

Scale Division.	n_D.	Difference.
0	1·4220	8·0
10	1·4300	7·7
20	1·4377	7·5
30	1·4452	7·2
40	1·4524	6·9
50	1·4593	6·6
60	1·4659	6·4
70	1·4723	6·0
80	1·4783	5·7
90	1·4840	5·5
100	1·4895	

instrument, enables the conversion from scale-readings to refractive indices to be readily made.

TABLE XCII.—BUTYRO-REFRACTOMETER SCALE READINGS.

Class.	Name of Oil, etc.	Butyro-refractometer Scale Readings at				
		15° C.	15·5° C.	20° C.	25° C.	40° C.
Vegetable Non-drying Oils and Fat.	Arachis (earthnut) oil,	..	67·5–71·8	..	65·8–67·5	57·5
	Coconut oil, . .	..	49·1	..	..	33·5–35·5
	Olive oil, . . .	..	66·9–69·2	..	62–62·8	54·1–56·4
Vegetable Semi-drying Oils.	Cottonseed oil, . .	..	72·3–75·6	..	67·6–69·4	58·4
	Curcas oil, . . .	..	..	..	65	56·5
	Maize oil, . . .	77·5	76·2–77·5	..	..	..
	Mustard oil, . .	..	74·5–76·5	..	..	58·5–59·5
	Rape oil, . . .	..	74·1–74·8	..	68	58·8–59·2
	Ravison oil,. . .	..	..	74	71·5	..
	Sesamé oil, . . .	..	73·3	..	68–69·2	59·6–60·6
Vegetable Drying Oils.	Linseed oil, . . .	..	..	84–90	81–87	72·5–74·5
	Nigerseed oil, . .	..	..	..	..	68
	Poppyseed oil, . .	78·3	77·1–77·8	..	72–74·5	63·4
	Sunflower oil, . .	..	72·1–72·7	..	..	..
	Walnut oil, . . .	..	..	..	..	64·8–68
Animal Oils and Fats.	Horse fat, . . .	..	..	..	61·2–66 *	..
	Lard oil, . . .	..	65·2–69·5	..	..	41
	Neatsfoot oil, . .	..	..	63·0–64·6	..	..
	Tallow (beef), . .	..	..	..	..	49
Marine Animal Oils and Fluid Waxes.	Cod-liver oil, . .	80·8–86·7	..	77·5–83·2	75–80	66–71
	Dolphin oil, . .	67·7	..	63·6	..	..
	Menhaden oil, . .	..	..	..	80·7	71·3–72
	Porpoise oil, . .	..	..	..	54·8	46·3
	Sardine oil (Japanese),	..	..	..	..	56-61
	Seal oil, . . .	..	..	..	72·7–76·2	64–65
	Sperm oil, . . .	..	..	..	54	46·2
	Whale oil, . . .	..	..	..	65–68	56–59

* From different parts of the animal (Dunlop).

Table XCII. contains the butyro-refractometer scale readings given by a number of oils.

Another form of instrument, by which the different refractive powers of the various oils and fats are more sharply distinguished, is the differential

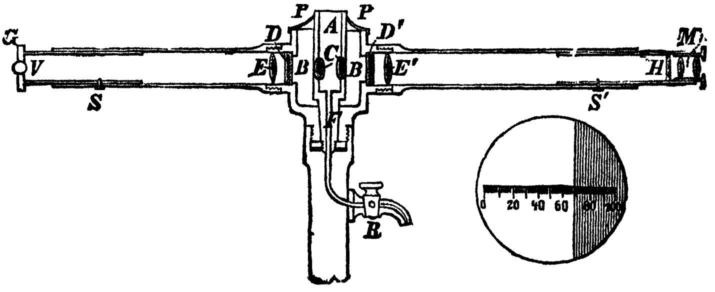

FIG. 110.

refractometer of Amagat and Jean. In this instrument, known as the *Oleo-refractometer*, the refractivity of the oil under test is compared with that of a standard oil, and the difference is measured on an arbitrary scale. The essential parts are shown in section in fig. 110. It consists of a collimator and a telescope, having a common axis, between which is fixed a hollow prism for containing the oil. The hollow prism A is a metallic cell having opposite glass windows CC fixed at an angle of 107°, and surrounded by a bath of sheep's-foot oil (" huile type ") contained in the vessel BB, which is furnished with opposite parallel windows, D, D′. The temperature of the oils in the cell B and in the prism are kept at a constant temperature of 22° C. by means of an outer water bath not shown in the figure. The light rays from an ordinary gas flame placed at the end of the collimator G traverse the oils, and are focussed by the lens E′ of the telescope upon the photographed scale H, and viewed through the

TABLE XCIII.—TESTS OF OILS WITH AMAGAT AND JEAN'S OLEO-REFRACTOMETER.

Class.	Name of Oil, etc.	Refractometer. Degrees at 22° C.
Vegetable Non-drying Oils.	Arachis (earthnut) oil,	+3·5 to +7
	Castor oil,	+37 to +46
	Olive oil,	±0 to +3·5
Vegetable Semi-drying Oils.	Beechnut oil,	+16·5 and +18
	Cameline oil,	+32
	Cottonseed oil,	+17 to +23
	Rape oil,	+15 to +20
	Ravison oil,	+18 to +25
	Sesamé oil,	+13 to +18
Vegetable Drying Oils.	Hempseed oil,	+32 to +37·5
	Linseed oil,	+48 to +54
	Nigerseed oil,	+26 to +30
	Poppyseed oil,	+23·5 to +35
	Sunflower oil,	+35
	Tung oil,	+75
	Walnut oil,	+35 to +36
Animal Oils and Fats.	Lard,	−8 to −14*
	Lard oil,	±0 to +5·5
	Neatsfoot oil,	−1 to −4
	Sheep's foot oil,	±0
	Tallow,	−15 to −18 (−40?)*
	Tallow oil,	−1 to −5 (−15?)
Marine Animal Oils.	Cod-liver oil,	+38 to +53
	Sardine oil,	+50 to +53
	Seal oil,	(+8?) +30 to +36
	Shark liver oil,	+29 to +35
	Sperm oil,	−12 to −17·5
	Sperm oil (Arctic),	−13
	Whale oil,	+30·5 to +48
Miscellaneous.	Paraffin (soft),	+54 to +58·5*
	Rosin oil,	+78

* At 45° C.

magnifier M. The collimator has, instead of a slit, a movable shutter with a sharp vertical edge, which throws part of the field into shadow, and the edge of this shadow is focussed sharply upon the scale.

In using the instrument, the prism A is first of all filled with some of the standard (sheep's-foot) oil, similar to that contained in the outer cell; there is then no refraction, and the edge of the shadow, if not exactly on the zero of the scale, is adjusted to it by moving the shutter. The standard oil having been drawn off through the tap R, and the prism rinsed with ether and dried, the oil to be tested is introduced, having been previously brought to exactly 22° C. in temperature. The deviation is then read off upon the scale.

The results obtained by different instruments of this kind are only comparable if the angle of the prism of each instrument, the focal distance of the lens E′, and the scale H are precisely the same. Allen states that this is not always the case, and that a sample of oil which showed 4·5° in his instrument gave 6° and 11°, respectively, in two others. Therefore, every new instrument before being purchased should be tested with genuine samples of two or three typical oils, say olive, linseed, and castor, and the deviations compared with the numbers given in Table XCIII. (p. 280), which contains the results of various observers.

J.—HEAT OF ADSORPTION OF OILS BY METAL.

W. Bachmann and C. Brieger[1] have measured the heat liberated when lubricating oils and other liquids wet a metallic surface. As the quantity of heat to be measured was extremely small, it was necessary to employ a large metallic surface. The authors, therefore, used for their experiments copper powder, produced by reducing cupric hydroxide at a low temperature (300° C.) in hydrogen. The oil was contained in a vacuum-jacketed (Dewar) tube, and immersed in it were (1) a stirrer operated by an electro-motor, (2) a delicate iron-wire resistance thermometer capable of registering thousandths of a degree Centigrade, and (3) a tube containing the copper powder, closed at the lower end by a stopper which could be quickly pushed out. In each experiment, 20 grms. of copper powder and 200 c.c. of oil, or diluted oil, were used. Viscous oils were diluted with benzol (2 of oil to 1 of benzol) to reduce the viscosity, benzol having a very low adsorption heat.

In making an experiment, the Dewar tube, containing the liquid and the above-mentioned immersed parts, and jacketed with cotton-wool in a large beaker, was left for twenty-four hours in a room at constant temperature. The stirrer was then started and temperature observations made at minute intervals during a period (the fore-period) to measure the heat liberated by the stirring. By releasing the stopper the copper powder was then dropped into the oil, causing an immediate and sudden rise of temperature, after which the temperature observations were continued for a period (the after-period) during which the rise was approximately at the same rate as in the fore-period. By plotting the results, the rise of temperature due to the adsorption heat or "heat of wetting" (*Benetzungswärme*) of the copper by the oil was ascertained. The results obtained are recorded in Table XCIIIA., the last column of which shows the calculated heat in calories per 100 grms. of copper powder.

It will be observed that the heats of wetting, or adsorption heats, are in close relationship to the known lubricating powers of the oils. The marked increase in the adsorption heat of petroleum, caused by dissolving in it 1 per cent. of oleic acid, will also be noted. For the significance of this in relation to the work of Southcombe and Wells, see p. 289.

---

[1] *Kolloid Zeitschrift*, xxxvi. (1925), pp. 142–154.

This method is applicable only to research work. It is far too delicate and complicated for the routine testing of oils.

TABLE XCIIIA.—HEATS OF ADSORPTION.

No. of Experiment.	Oil.	Observed Temperature Rise with 20 grms. Copper Powder, ° C.	Calculated Heat per 100 grms. Copper Powder (calories).
1	Castor, ...	0·018	11·75
2	"	0·019	12·40
3	Linseed, ...	0·023	14·45
4	"	0·021	13·25
5	Machine oil distillate, .	0·022	14·55
6	" " .	0·021	14·00
7	Machine oil, refined, .	0·010	6·65
8	" " .	0·009	5·95
9	Paraffinum liquidum, .	0·006	3·85
10	" " .	0·006	3·85
11	Petroleum, . . .	0·007	5·30
12	"	0·008	6·00
13	Petroleum + 1 % oleic acid,	0·029	22·00
14	" " "	0·027	20·5
15	Benzol, ...	0·003	..
16	"	0·004	..

K.—COLOUR AND APPEARANCE.

The colour and appearance of lubricating oils are very varied. Some oils, such as lard oil, are almost colourless, others present a variety of shades of yellow, red, brown, green, or blue. The colour of some oils depends upon whether they are viewed by transmitted or reflected light. Animal and vegetable oils, and "pale" mineral oils, are transparent. "Red" mineral oils are transparent or translucent. "Dark" mineral oils are opaque. A cloudy appearance may be due to moisture. Some oils exhibit fluorescence. Paraffin base oils and the filtered cylinder oils made from them have a greenish fluorescence ; in the case of Russian oils and many asphaltic base oils, the fluorescence is bluish (Thomsen).

So far as the authors are aware, the colour of an oil has little, if any, relation to its lubricating value ; and it is quite possible that in refining or treating an oil merely to improve the colour and appearance the lubricating value may be impaired. T. C. Thomsen[1] states that "dark red oils when used for internal combustion engines or air compressors . . . produce more carbon than pale oils, and dark-coloured circulation oils are more inclined to produce deposits in steam turbines and enclosed type steam engines than pale oils. Similarly, dark cylinder oils produced more carbon than filtered cylinder oils when used for steam-engines employing superheated steam. Where oils are not exposed to great heat or oxidation, it is immaterial whether they are lighter or darker in colour." E. A. Evans[2] states that "the colour has been taken as a criterion of the liability of an oil to sludge. This belief is entirely misleading, for a white oil may give no sludge or it may give much ; on the other

---

[1] *The Practice of Lubrication*, 1920, pp. 47 and 48.

[2] *Lubricating and Allied Oils*, 1921, p. 92.

hand, a dark amber-coloured oil may give less sludge than a pale amber oil, or even a white oil."

As the colour and appearance of an oil depend upon the conditions under which it is viewed, these properties when recorded should be observed under uniform conditions. Redwood uses for the purpose Lovibond's Tintometer, observing the colour of the oil by transmitted light and using a 2-inch cell for the paler coloured oils and 1 inch, $\frac{1}{2}$-, $\frac{1}{4}$-, or $\frac{1}{16}$-inch cells for the darker oils, matching the colour with suitable standard colour glasses which are provided with the instrument.

CHAPTER VIII.

CHEMICAL PROPERTIES AND METHODS OF EXAMINATION OF LUBRICANTS.

A.—FREE ACID OR ACIDITY.

I. Nature and Amount of the Free Acid in Oils.—Free acid in a lubricating oil may consist of—

(1) *Free fatty acid,* naturally existing in small quantity in most vegetable oils, or set free in larger quantity by the decomposition of a vegetable or animal oil during storage in a crude state, or by the action of sulphuric acid in the refining process; or fatty acid purposely added to a mineral lubricating oil to improve its lubricating property (see p. 289).

(2) *Rosin acid,* present as a natural constituent of rosin oil, or as added rosin;

(3) *Organic (petroleum) acid,* naturally existing in crude mineral oil, or resulting from the oxidation of the oil during use;

(4) *Free sulphuric or other mineral acid* used in refining the oil and not properly washed out.

Mineral lubricating oils in the dark unrefined state naturally contain small quantities of organic acids (naphthenic acids) which may amount, according to Holde,[1] to 0·3 per cent., expressed as SO_3, or to 2·1 per cent. if expressed as oleic acid; but the pale oils, when well refined, are almost perfectly neutral. Owing to their constitution, mineral oils are not capable, like animal and vegetable oils, of developing acidity by hydrolysis, but some acidity may be developed by oxidation of the hydrocarbons, especially when heated. J. E. Hackford[2] has found that notable differences occur in the rate at which mineral lubricating oils from different crudes develop acidity by oxidation. His results are shown in the graph, fig. 110A. Acidity of unused refined mineral oils is most likely to be due to the accidental presence of sulphuric acid, which is used in refining, but such an impurity is now rarely met with, and would show great carelessness in washing the oil.

All vegetable and animal oils, on the other hand, contain free fatty acids, in proportions ranging from less than 0·5 per cent. to upwards of 50 per cent. The least acid oils are those refined with alkali, such as *cottonseed oil*; the acidity of these oils varies, according to the authors' experience, from 0·08 to 0·26 per cent., *i.e.* it is practically negligible. More acidity is met with in those oils which are refined with sulphuric acid, such as *rape oil,* which used to contain on an average about 2·2 per cent. of free (oleic) acid, ranging from 1 per cent. to about 6 per cent., but seldom exceeding 4 per cent. 378 samples

---

[1] *Kohlenwasserstofföle und Fette*, 1924, p. 237.

[2] *Jour. Soc. Chem. Ind.*, 45 (1926) 694–697.

of *refined rape oil* tested by Archbutt during three years ending 31st March 1905, all representing large contracts, gave the following results:—

Number of Samples.	Free (Oleic) Acid per cent.
122	1·1–1·9
223	2·0–2·9
30	3·0–3·9
3	4·0–5·7
378	(Average), 2·21 per cent.

The more general use of fuller's earth in refining has reduced the acidity

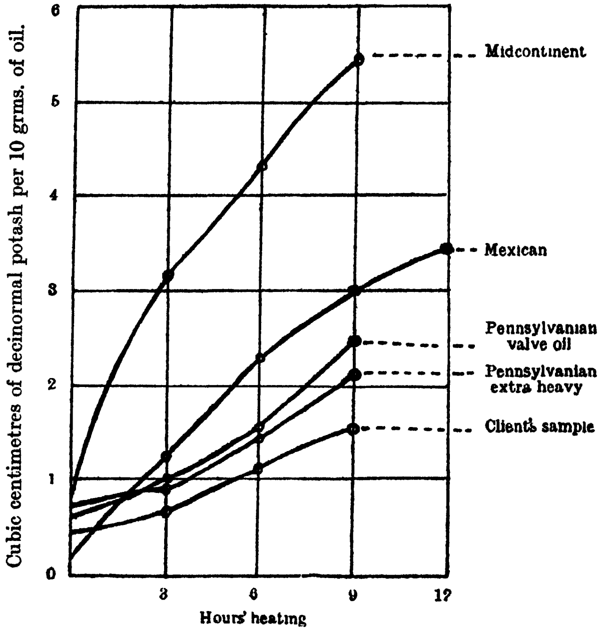

FIG. 110A.—Time-Effect of Passage of Oxygen through Different Oils at 150°.

of rape oil, as is shown by the following results of analyses of 206 samples examined during 1909 and 1910 :—

Number of Samples.	Free (Oleic) Acid per cent.
1	0·7
137	1·1–1·9
66	2·0–2·9
1	3·0–3·9
1	4·8
206	(Average), 1·80 per cent.

Traces of free sulphuric acid are met with in rape oil which has been refined with this acid (see p. 390).

Those oils which are stored in a crude state, and are not afterwards chemically refined, often contain such large amounts of free fatty acids as to quite unfit them for use as lubricants.

Thus, in 9 samples of *palm oil*, Archbutt found from 11·9 to 78·9 per cent.

of free (palmitic) acid.[1] Lewkowitsch found from 50 to 70 per cent. of free (palmitic) acid in a large number of commercial palm oils; and in the 16 samples analysed by Tipler, and set out in Table XLVIII. on p. 152, the free palmitic acid amounted to from 9·2 to 83·5 per cent.

In 151 samples of *olive oil* from various sources, Archbutt found the following percentages of free (oleic) acid:—[2]

TABLE XCIV.

Number of Samples.	Source.	Free (Oleic) Acid per cent.		
		Highest.	Lowest.	Average.
70	Spain, ...	25·1	1·5	5·5
36	Italy, ...	25·2	0·9	8·5
28	Sicily, ...	16·6	0·5	9·1
12	Candia, ...	16·8	5·5	9·5
3	Levant, ...	13·5	8·5	10 4
2	Zante, ...	8·7	4·8	6·7

136 samples of olive oil, supplied under contract to a specification limiting the free (oleic) acid to a maximum of 4 per cent., contained a minimum of 0·6 per cent., a maximum of 7·4 per cent., and an average of 2·85 per cent. of free (oleic) acid.

Other observers have found from 0·2 to 29·2 per cent. of free (oleic) acid in olive oils.[3]

In 25 samples of *tallow* examined by Deering[4] the following percentages of free (oleic) acid were found:—

TABLE XCV.

Number of Samples.	Source.	Free (Oleic) Acid per cent.		
		Highest.	Lowest.	Average.
13	Russian, ...	12·20	2·20	5·48
4	Australian beef, . .	8·85	1·75	4·47
4	„ mutton, . .	7·15	0·85	3·91
2	Town tallow, . . .	6·95	4·55	5 75
1	Unknown, ...	2·10	...	...
1	Town tallow, six years old,	25·0	...	...

88 samples of *tallow* examined by Archbutt gave the following results:

TABLE XCVI.

Number of Samples.	Source.	Free (Oleic) Acid per cent.		
		Highest.	Lowest.	Average.
55	Home melted, . . .	11·90	1·40	4·89
9	Australian mutton, . .	12·84	1·00	4·84
11	South American beef, .	7·60	0·70	2·07
12	Unknown, ...	10·60	1·30	4·65
1	„	83·60	...	...

---

[1] *Analyst*, ix. (1884), p. 171.

[2] *Jour. Soc. Chem. Ind.*, viii. (1889), p. 685.

[3] Allen's *Commercial Org. Anal.*, ii. (1910), p. 109.

[4] *Jour. Soc. Chem. Ind*, iii. (1884), p. 540.

227 samples of tallow, supplied to a specification limiting the free (oleic) acid to 4 per cent., contained a minimum of 0·5 per cent., a maximum of 26·2 per cent., and an average of 2·86 per cent., of free (oleic) acid.

In 23 samples of *Indian castor oil* examined by Deering and Redwood,[1] the acidity, calculated as oleic acid, ranged from 0·70 to 5·30 per cent., and averaged 2·58 per cent.; 6 samples of castor oil for lubricating, examined by Archbutt, contained from 1·47 to 2·70 per cent.; and Thomson and Ballantyne found, in two samples, 1·46 and 2·16 per cent. respectively. But Nordlinger found[2] in 2 samples of expressed castor oil from 0·62 to 18·61 per cent. of free acid, or an average of 9·28 per cent.; whilst in 5 samples of extracted oil he found from 1·18 to 5·52 per cent., or an average of 2·78 per cent.

In 8 samples of *sperm oil*, seven examined by Deering and one by Thomson and Ballantyne, the acidity as oleic acid ranged from 0·55 to 2·64 per cent., and averaged 1·7 per cent.; in two samples of *Arctic sperm oil* it was 1·97 and 2·11 per cent. respectively, averaging 2·04 per cent. 14 samples of *Southern sperm oil*, examined by Veitch Wilson,[3] contained from 0·5 to 2 per cent. of acidity, averaging 1·32 per cent.; and 29 samples of Arctic sperm oil contained from 0·5 to 3 per cent. of acidity, averaging 1·78 per cent. Therefore, Arctic sperm oil is a little, but not much, more acid than Southern sperm oil.

Acidity is not the same as *rancidity*. Ballantyne[4] has shown that oils can become rancid without the liberation of any free acid whatever, and the converse is also true. The researches of Ritsert and others have proved that the changes which produce rancidity of oils are due to oxidation.[5]

The acidity of most fatty oils tends to increase by keeping, but *refined* oils can be kept for considerable periods without undergoing any change of practical importance. Thus, Ballantyne[4] found that olive, rape, castor, and arachis (ground nut) oils remained unchanged in acidity for six months, whether kept in the dark in corked bottles or exposed freely to sunlight and air; and some neutral palm oil prepared by one of the authors, after being kept in a stoppered bottle in a dark cupboard for fourteen years, was found to contain only 0·4 per cent. of acidity, calculated as palmitic acid, all of which may have been originally present, as the acidity was not determined after the oil had been purified.

II. **Effects of Free Fatty Acids in Lubricants.**—Free fatty acid in a lubricant may be harmful or, in very small quantity, it may be beneficial, according to circumstances. Long experience has proved that in steam cylinders, when animal fats or vegetable oils are used for lubrication, fatty acids attack the metallic surfaces, corroding the metal and forming soaps, which collect in and obstruct the steam passages; and even in bearings such as railway axles, lubricated with greases containing water, or with oil when water can become mixed with the oil, free fatty acids attack the metal and form soaps which dissolve in and thicken the lubricant, besides corroding and pitting the metal. On the other hand, it has been recently discovered that fatty acids dissolved in mineral oil in strictly limited and very small amount (1 to 2 per cent.) have a remarkable effect in improving the "oiliness" or friction-reducing power of the lubricant. It will, therefore, be convenient to deal with this subject under two headings, first discussing the corrosive effects and then the friction-reducing properties.

---

[1] *Jour. Soc. Chem. Ind.*, xiii. (1894), p. 961.

[2] *Zeits. Anal. Chem.*, xxviii. p. 183.

[3] Carpenter and Leask, *Soap, Candles, Lubricants, and Glycerin*, p. 298.

[4] *Jour. Soc. Chem. Ind.*, x. (1891), p. 29.

[5] For a full discussion of the subject see Lewkowitsch, *Analysis of Oils, etc.*, fourth edition, vol. i. p. 33 *et seq.*

(1) *Effects dependent upon Corrosive Properties.*—Burstyn,[1] who was one of the first to pay attention to the corrosive effects of fatty oils upon axles and bearings, showed, in 1876, that the action of olive oil on brass was greater the more acid the oil. It is, therefore, to be regretted that Redwood [2] and others, who have been at much pains in investigating the relative action of various fatty oils upon metals, did not determine the amount of free acid contained in the oils they experimented with. This omission makes their experiments almost valueless, as the different effects observed may have been, and probably were, entirely due to differences in the acidity of the various oils, and not to any difference in the properties of the oils themselves.

Not only is it probable that neutral fatty oils have no chemical action on metals, but it is doubtful whether even free fatty acid can exert much action in the absence of air and moisture. Thus Fox [3] suspended thin strips of lead in the mixed fatty acids prepared from olive and linseed oils, and found that after having been heated for several days to 220° F. the lead had not lost weight. E. Donath [4] took bright, accurately weighed strips of iron, copper, brass, and zinc, and completely immersed some in strongly acid olive oil and others in crude oleic acid. At the end of three weeks, the strips were found to have suffered very little loss of brightness and a scarcely perceptible loss of weight. Even when the oils were kept heated to 70°–80° C. (158°–176° F.) for several days, the metals were not attacked. But if, previous to immersing the metals in the acid oils, the latter were thoroughly emulsified with air, or especially with water, by vigorous shaking, corrosion readily took place. Donath concluded from these experiments that the corrosive action on metals of lubricating oils containing free fatty acids depends to a great extent upon whether the oiled surfaces come into contact with atmospheric oxygen, and whether, by condensation or other means, water gets into the oil. It is difficult to account in any other way for the very erratic manner in which corrosion sometimes takes place, such as is illustrated by the following experiment made by one of the authors several years ago.

Four samples of *railway wagon grease*, each composed, in the same proportions, of tallow, palm oil, soap, and water, but containing respectively 0·4, 1·4, 1·6, and 4 per cent. of free fatty acid, were taken, also a sample of very acid palm oil, free from water, containing 72·2 per cent. of free (palmitic) acid. Into each of these, two strips of bright steel were inserted, and after an interval of four months they were taken out, cleaned and examined, with the following results:—

Strips immersed in	Free Fatty Acid per cent.	Condition of the Steel after Four Months' Immersion.
Grease No. 1, .	0·4	Both strips bright.
Grease No. 2, .	1·4	" "
Grease No. 3, .	1·6	1 strip bright, 1 deeply corroded in one spot.
Grease No. 4, .	4·0	Both strips deeply corroded on one side.
Acid palm oil, .	72·2	Both strips merely stained and not corroded.

If fatty acids alone can attack steel, the two strips immersed in the very acid palm oil should have been the most corroded, instead of which they were merely stained, whilst the strips immersed in the grease containing only 4 per

---

[1] *Dingler's Polyt. Journal*, ccxvii. p. 314.

[2] I. J. Redwood, *Jour. Soc. Chem. Ind.*, v. (1886), p. 362.

[3] *Analyst*, viii. (1883), p. 116.

[4] *Dingler's Polyt. Journal*, ccxciv. 186; *Jour. Soc. Chem. Ind.*, xiv. (1895), p. 283.

cent. of free fatty acid were both deeply corroded, doubtless because of the simultaneous presence of water. It will be observed that the most acid grease proved to be the most corrosive of the four.

✓In presence of water, and especially when heated, the corrosive effects of fatty ~~acids are most marked~~. Thus, *oleic acid*, water, and iron filings, if heated together in a test-tube, react briskly, hydrogen being evolved and brown oleate of iron formed. This compound is decomposed, by oxidation, into ferric hydroxide and free oleic acid, which again attacks more iron; in this way a comparatively small quantity of the free fatty acid has been known to perforate wrought-iron plate more than ½ inch in thickness.[1] The very serious trouble which may be caused by the fatty acids set free when tallow or other animal or vegetable fat or oil is used in steam cylinder lubrication is well known to engineers and is referred to in Chapter XIV., p. 584.

Although a metal in stationary contact with a cold solid grease containing free fatty acid and water may undergo serious *local* pitting, as proved by the above experiments, the corrosive action upon a bearing or journal of the free fatty acid existing in a fluid oil, or in a grease lubricating a journal in motion, may escape notice, because it is spread over the whole of the rubbing surfaces. The effect of chemical action will, however, be observable in the thickening of the oil and the formation of gummy deposits. Thus, a mixture of olive oil with from 10 to 15 per cent. of mineral oil, which had been taken out of a railway carriage axle-box after about three weeks' use, was found to be much thickened, of a deep green colour, and contained in solution much copper and zinc. Some of the oil was dissolved in ether and shaken with dilute nitric acid to extract the dissolved metals; the ether was then evaporated, and the oil was recovered with its original colour and almost its original fluidity restored. From this it is evident that the thickening and gumming of fatty oils on bearings, generally attributed solely to oxidation, may be due partly to soaps formed by the chemical action of the free fatty acids upon the metal of the bearing, dissolving in and thickening the oil. In the oil used by woolcombers for oiling wool, the amount of free fatty acid is of secondary importance compared with freedom from a tendency to oxidise and form a sticky residue on the wool fibre.[2]

(2) *Friction-reducing Properties.*—H. M. Wells and J. E. Southcombe[3] have shown that a small quantity (1 to 2 per cent.) of fatty acid dissolved in a mineral lubricating oil has a marked effect in increasing the lubricating power of the oil and they have patented[4] what they term the "Germ Process" for improving mineral lubricating oils, based upon this discovery. The beneficial effect of the fatty acid has been confirmed by many independent experimenters. The results recorded in Table XCVII.[5] were obtained by Archbutt with the Thurston machine described on pp. 434–447, at a journal surface speed of 7 feet per minute and under a load of 270 lbs. per square inch, conditions under which the oil film is very imperfectly formed and much solid friction occurs.

The mineral oil used was a paraffin base oil of about the same viscosity as rape oil at 60/65° F., which was the temperature in all the tests. The fatty acids used were the mixed fatty acids prepared from rape oil. The machine was run with the straight mineral oil until the friction became steady (Test No. 1), then, without stopping the machine, the oil was changed to a

---

[1] V. Wartha, *Dingler's Polyt. Journal*, ccxv. 115; Stock, *Chem. News*, xxxix. (1879), p. 6.

[2] Richardson and Jaffé, *Jour. Soc. Chem. Ind.*, 1905, p. 534.

[3] *Jour. Soc. Chem. Ind.*, 39 (1920), 51–60 T.

[4] Eng. Pat., 130,377 (1918)

[5] See discussion on Wells and Southcombe's paper; also *Discussion on Lubrication* before the Physical Society of London, 28th November 1919.

mixture containing the fatty acid (Test No. 2). When the friction had again become steady the oil was again changed to the mixture containing more fatty acid (Tests Nos. 3 and 4), and finally a check test was made by changing over to the straight mineral oil used for the first test (Test No. 5).

TABLE XCVII.

Test No.	Oil Mixture.		Friction Coefficient.
	Mineral Oil.	Rape Oil Fatty Acids.	
1	100·0	Nil	0·0066
2	99·5	0·5	0·0049
3	99·0	1·0	0·0045
4	98·0	2·0	0·0042
5	100·0	Nil	0·0066

Further experiments were made to ascertain the effect of mixing perfectly neutral rape oil with the mineral oil, and as neutral rape oil is not an article of commerce it was prepared by shaking commercial rape oil with slaked lime and allowing the oil to stand until clear. Every trace of free fatty acid is removed by this simple method, without introducing any moisture or other impurity into the oil. With the neutral rape oil thus prepared, the results in Table XCVIII. were obtained.

TABLE XCVIII.

Test No.	Oil Mixture.		Friction Coefficient.
	Mineral Oil.	Neutral Rape Oil.	
1	100	Nil	0·0066
2	90	10	0·0065
3	80	20	0·0062
4	60	40	0·0053
5	40	60	0·0047
6	20	80	0·0041
7	Nil	100	0·0043
8	100	Nil	0·0062

Comparing the results in this series with those in Table XCVII. it will be seen that nearly 60 per cent. of neutral rape oil was required to lower the friction as much as did 0·5 per cent. of rape oil fatty acids, and nearly 80 per cent. of the neutral oil was required to reduce the friction to as low a figure as 2 per cent. of the fatty acids.

A further series of tests was made, comparing together the straight mineral oil, the neutral rape oil, and the commercial rape oil containing 2·4 per cent. of free fatty acid from which the neutral rape oil was prepared. The tests are given in Table XCIX.

In these tests, the commercial rape oil containing 2·4 per cent. of free fatty acid did not give a much lower coefficient than the neutral rape oil, from which it appears that the free fatty acid in rape oil does not lower the

TABLE XCIX.

Test. No.	Oil.	Friction Coefficient.
1	Mineral oil, . . .	0·0078
2	Neutral rape oil, . .	0·0050
3	Acid rape oil (2·4 % F.A.),	0·0045
4	Mineral oil, . . .	0·0078

friction coefficient of the neutral rape oil so much as it lowers that of a mineral oil of the same viscosity in which it is dissolved.

Tests made at the National Physical Laboratory with the Lanchester Worm-Gear Testing Machine, comparing the behaviour of Bayonne mineral oil, used alone, with the same oil mixed first with 10 per cent. of commercial rape oil containing 1·86 per cent. of free fatty acid and then with 10 per cent. of the same rape oil deprived of nearly all its free fatty acid (actual percentage present 0·13) are shown in the graph, fig. 111. They show a decidedly higher efficiency with the mixture containing the acid rape oil, and the critical temperature (that is, the temperature at which the running of the gear becomes unsteady) is about 10 degrees higher. The smoothness of the curve of Bayonne + neutral rape oil is apparent only, and is due to the fact that owing to the unsteadiness and difficulty of maintaining a balance no point was taken between 46° and 52° C. Bayonne oil, to which 1 per cent. of rape oil fatty acids was added (not shown in the graph), gave results nearly but not quite so good as the mixture containing 10 per cent. of commercial acid rape oil.

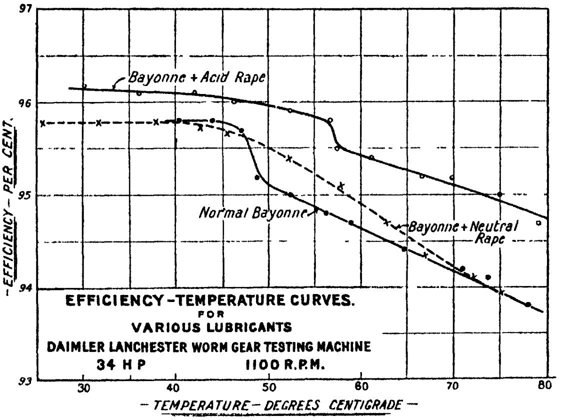

FIG. 111.

The frictional results given in Table C. on p. 292 were obtained by R. M. Deeley on his machine described on p. 412. The oils were supplied by the Henry Wells Oil Co., Ltd., to whom we are indebted for the figures. "Tonicol" is a proprietary mixture of mineral oil and fatty acid, containing approximately 25 per cent. of free fatty acid.

A series of very carefully conducted experiments by J. H. Hyde with the Deeley machine have been reported by the Lubrication Research Committee.[1] In these tests Bayonne mineral oil was used alone and mixed with varying percentages of (1) rape oil, containing 2·44 per cent. of free fatty acid, (2) rape oil fatty acids, (3) commercial oleic acid, and (4) neutral rape oil. The curves of fig. 112 show the results obtained by adding fatty acid to the mineral oil plotted against the percentage of fatty acid in the mixture. It will be seen that a very considerable reduction in the value of the static coefficient of friction resulted from the addition to the mineral oil of less than 0·1 per

---

[1] *Engineering*, 10th June 1921, pp. 708 and 709.

TABLE C.

Oil.	Viscosity in Centipoises at 70° F.	Static Coefficient of Friction.
Pale mineral "A,"	63	0·227
" " " +2 % "Tonicol," .	..	0·160
" " " +4 % " .	..	0·153
Pale mineral "D,"	79	0·239
" " " +2 % "Tonicol," .	..	0·141
" " " +4 % " .	..	0·154
Red mineral "J,"	108	0·191
" " " +2 % "Tonicol," .	..	0·136
" " " +4 % " .	..	0·120
Red mineral "M,"	155	0·253
" " " +2 % "Tonicol," .	..	0·140
" " " +4 % " .	..	0·145

cent. of fatty acid, whether added as oleic acid or rape oil fatty acids or as acid rape oil. In the experiments with acid rape oil, as little as 0·05 per cent. of fatty acid lowered the friction coefficient from 0·132 to 0·11. Increase in the proportion of rape oil caused further decrease in the coefficient of friction, the 40 per cent. mixture (1 per cent. acidity) giving a value for μ of 0·087. The coefficient given by the rape oil alone was 0·081. The addition of oleic acid in place of the rape oil gave very similar results, the values of μ obtained for mixtures up to 100 per cent. of oleic acid are shown in the inset diagram. The results obtained by the addition of rape oil fatty acids show a greater reduction in the friction than those obtained by the acid rape oil and oleic acid mixtures. The value of μ was reduced from 0·132 to 0·087 by the addition of only 0·20 per cent. of rape oil fatty acids, whilst a similar reduction required 40 per cent. of acid rape oil (acidity of mixture 1 per cent.), 2 per cent. of oleic acid, or 85 per cent. of neutral rape oil.

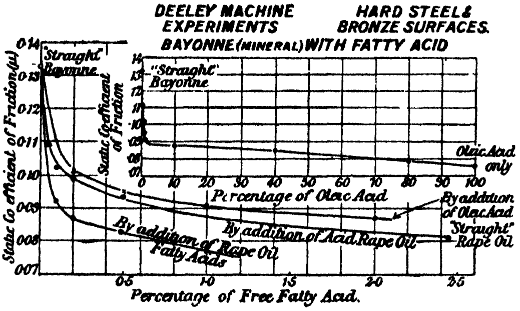

FIG. 112.

Similar results to the above were obtained by R. E. Wilson and D. P. Barnard[1] on a "Deeley Type" machine in the Massachusetts Institute of Technology, also on a machine in which a slider rested upon an inclined plane and the angle of inclination necessary to cause the slider to move was measured. In the latter (inclined plane) method of test, with a spherical segment slider, the results in Table CA. were obtained between the metals stated.

Further experiments have been made by T. E. Stanton[2] on a machine specially designed to investigate "boundary" lubrication. The machine, which is described in Chapter X., pp. 423–427, consisted of a rocking shaft and its bearing, oscillatory motion being produced by the attachment to the shaft of a heavy pendulum swinging under gravity. The results obtained are

---

[1] *Journ. Ind. and Eng. Chem.*, **14** (1922), pp. 682–695.

[2] *The Engineer*, cxxxv. (1923), pp. 678–680.

TABLE CA.

Lubricant.	Coefficient of Friction.		
	Speculum Metal on Steel.	Speculum Metal on Speculum Metal.	Fusible Alloy on Steel.
"Velocite B" mineral oil only, . .	0·182	0·173	0·152
"Velocite B" mineral oil+2 % stearic acid, ...	0·125	0·121	0·123

summarised in Table CI. so far as concerns the friction-reducing effect of oleic acid, which was the only fatty acid used. The shaft was of hard steel, the bearing phosphor bronze, and the pressure 2000 lbs. per square inch. Results obtained with castor oil are given for comparison.

TABLE CI.

Lubricant.	Viscosity at 20° C. in Poises.	Coefficient of (Friction μ).
Castor oil, ...	7·5	0·092
Bayonne mineral oil	1·6	0·128
" " +1 % oleic acid, .	1·6	0·105
" " +2 % " .	1·6	0·106
" " +5 % " .	1·6	0·106

It will be noticed that 1 per cent. of oleic acid was sufficient to produce the maximum effect.

Tests made with five entirely different types of machine and by many different investigators have proved, therefore, conclusively that a very small quantity, not exceeding 1 or 2 per cent., of fatty acid added to a mineral lubricating oil has a very marked effect in improving the lubricating power of the oil, and this has been confirmed by the results obtained in practice. The Henry Wells Oil Co., Ltd., who are the inventors and patentees of "Germ process" oils, *i.e.* mineral lubricating oils improved by the addition of 1 to 2 per cent. of free fatty acid, inform us that these oils are now used, to a far larger extent than is generally known, for the lubrication of steam engines, internal combustion engines, and machinery of various kinds, and have largely displaced the so-called "compounded oils" made by mixing mineral oils with 10 to 20 per cent. or more of fatty oils. They inform us that, apart from their own business, there are other lubricating oil manufacturers in this country and abroad, including the United States, who use the "Germ process" under royalty, but have not the right to sell their products under the trade-mark "Germ." One of these firms states that fatty acid "has completely displaced neutral fatty oils in our internal combustion engine lubricants; whereas formerly we used 10 to 20 per cent. of these oils as the compounding medium, we now use exclusively 'Germ' 1 per cent. to 1½ per cent., and with better results." A large sewing-cotton company have adopted a "Germ process" spindle oil in place of ordinary spindle oil for ring spindles and doubling frames in their numerous mills, having found a saving of 0·6 to 0·7 per cent. in horse-power as a result of careful dynamometer tests made with the two kinds of oil. Another cotton-spinning company report a saving of about 15 per cent. in the "maximum starting load" on ring frames, but not much difference between the "Germ process" and the ordinary oil, once the machines have got thoroughly warmed up. The reduced friction at starting is, however, of such benefit that the firm have adopted the "Germ process" oil. A very large motor bus company found several per cent. increased efficiency by adding "Germ process concentrate" to their standard gear oil. The same company, in their specification of "Germ process" clutch oil, require the oil to be a well-refined hydrocarbon oil without admixture of fatty oil or neutral glyceride, and to contain 0·5 to 1·25 per cent. of free fatty acid calculated as oleic acid.

We have specially inquired whether the application of this process to cylinder oil and in other conditions of lubrication where metals are brought into contact with oil and water under heat, has led to any trouble due to the corrosive action of the fatty acid, and we are informed that no case of corrosion has been reported. Messrs. the Henry Wells Oil Co., Ltd., remark: "In our opinion some of the most difficult cases of cylinder lubrication occur in marine practice, where vessels frequently stop and start, resulting in much condensation and appreciable quantities of water in the cylinders. For such purposes, 'Germ process' oils are regularly used, and we have never heard of any case of corrosion." It should be borne in mind that carefully refined commercial fatty oils used for lubrication almost invariably contain at least as much free fatty acid as is contained in "Germ process" mineral oils, and that whilst the presence in any lubricant (such as a compounded oil) of neutral glyceride may lead to the liberation of more free fatty acid by decomposition of the neutral glyceride, the free fatty acid in the "Germ process" oil is limited to the very small amount put in, and no more can be formed under any conditions. Except in special cases, therefore, as in the lubrication of ball- and roller-bearings and air-compressors, the free fatty acid in "Germ process" oils may be regarded as harmless.

III. **Estimation of Acidity.** The acidity of lubricating oil, which, as already stated, may be due to the presence of more than one description of free fatty or resin acid, or (rarely) to a mineral acid, is generally determined volumetrically and expressed either as oleic acid or as sulphuric acid or sulphuric anhydride. In this country, it is usual to express the acidity of a fatty oil or fat in terms of oleic acid; on the Continent the acidity is frequently stated as sulphuric anhydride. Another method of expression, adopted by Benedikt, is known as the "*acid value*," which is the *number of milligrammes of potash* (KOH) *required to neutralise the free acid in* 1 *grm. of oil.* Koettstorfer has proposed to express acidity in "*degrees*," which are the *number of c.c. of normal alkali required to neutralise the acidity of* 100 *grms. of oil.* Koettstorfer's degrees have the advantage to a chemist that they are at once converted into any required acid, if multiplied by the saponification equivalent of that acid÷1000. The relation of the different methods of expression is shown in the following table by Benedikt:—

Degrees; =c.c. of normal alkali required to neutralize 100 grms. of oil.	Acid Values; =milligrms. of KOH required to neutralize 1 grm. of oil.	Oleic Acid, per cent.	Sulphuric Anhydride, per cent.
1·0	0·561	0·282	0·040
1·782	1·0	0·5027	0·0713
3·546	1·9863	1·0	0·1418
25·000	14·025	7·05	1·0

For the determination of total acidity, 5–10 grms. of the oil may be completely dissolved in a neutralised mixture of ether (4 parts) and absolute alcohol (1 part), and titrated with an alcoholic decinormal solution of caustic soda, using phenolphthalein as indicator; or the oil may be merely shaken up in a flask or bottle with neutralised methylated spirit (which dissolves the free acid, leaving most of the neutral oil insoluble) and titrated with aqueous caustic soda solution. The latter method is simpler, and is sufficiently accurate; it is, therefore, preferable for technical purposes. The solutions required are:

Normal (aqueous) caustic soda solution. 1 c.c.=0·282 grm. oleic acid. A clear aqueous solution containing 50 grms. of caustic soda in 100 c.c. (see p. 303) is diluted with distilled water free from CO_2, until of correct strength, phenolphthalein being used as indicator in titrating.

Phenolphthalein solution. An alcoholic solution, containing 3 grms. phenolphthalein in 100 c.c., neutralised by shaking with dry precipitated calcium carbonate and filtering.

Neutralised methylated spirit; prepared by filling a stoppered bottle of about 500 c.c. capacity with ordinary methylated spirit, adding 10 c.c. of phenolphthalein solution, and dropping in normal caustic soda solution from a burette until the liquid assumes a faint permanent pink colour.

To estimate the acidity of a fluid oil in terms of oleic acid, weigh 28·2 grms. of the oil into an Erlenmeyer flask of about 250 c.c. capacity, add 50 c.c. of neutralised alcohol and 2 c.c. of phenolphthalein solution. Then add normal caustic soda solution from a burette, cautiously at first, but afterwards in quantities of 0·5 to 1 c.c. or more at a time if the crimson colour at first formed disappears quickly on shaking. When the colour begins to disappear slowly, cork the flask and shake it violently, then add the soda in smaller quantities, finally drop by drop, vigorously shaking the corked flask after the addition of each drop, until the alcoholic liquid is permanently coloured a faint pink. The number of c.c. of normal caustic soda solution used is the percentage of free acid, expressed as oleic acid, in the sample. If the quantity of oil available is small, 2·82 grms. may be titrated with *decinormal* soda, which will give the same result.

A *solid fat*, such as tallow, may be titrated in the same way as a fluid oil, if the contents of the flask be kept sufficiently heated to maintain the fat in a melted condition. In weighing out the fat, some of it is first melted in a beaker and poured, while melted, into the counterpoised flask until the weight is nearly made up. The flask is then removed from the balance and allowed to become quite cold. It is then replaced, and the exact weight is made up by adding a little more fat. In titrating palm oil, which is sometimes deep red in colour, the half or quarter of 28·2 grms. may be taken and mixed with 100 c.c. of alcohol instead of 50 c.c.; the colour change can then be sharply detected, even with very red samples. The volume in c.c. is multiplied by 2 or 4, as the case may be, to get the percentage of acid.

Very dark-coloured oils, in which the colour change cannot be detected by the above method, should be very well shaken with two or three times their volume of neutralised alcohol, then poured into a separating funnel and left for the liquids to separate. The oil is drawn off into the original flask and shaken again with an equal volume of alcohol, whilst the alcoholic solution in the separator is drawn off into a clean flask. The mixture of alcohol and oil is again poured into the funnel and allowed to separate, the oil is then drawn off and shaken a third time with alcohol. The second and third alcoholic extracts having been mixed with the first, phenolphthalein is added and the liquid is titrated with caustic soda. This manipulation may sometimes be avoided by using as indicator, instead of phenolphthalein, about 2 c.c. of a saturated alcoholic solution of alkali blue.[1] The colour change from bright blue in acid solution to red in alkaline solution is very distinct, and can be readily seen in the dark-coloured liquid.

Free mineral acid must be tested for separately, as the above methods make no distinction between fatty and mineral acid. To detect the presence of mineral acid, take a known quantity, say 25 c.c., or about the same number of grammes of the oil, and well shake it in a separating funnel with 200 c.c. of hot water. When the water has quite separated from the oil, draw it off through a wet filter paper into a flask, and add to the *cold* liquid a few drops of methyl orange indicator, which is unaffected by fatty acids, but in the presence of free mineral acid will tinge the liquid red. If free mineral acid be detected, the oil may be again shaken several times with small quantities of hot water until all the acid has been washed out, and the mixed aqueous liquids may then be neutralised by adding normal caustic soda solution until the red colour just changes to yellow. 1 c.c. of normal caustic soda is equivalent to 0·049 grm. of sulphuric acid, or 0·040 grm. of sulphuric anhydride, in the quantity of oil taken. The neutralised solution may be boiled down to a small volume and portions tested with appropriate reagents in order to determine the nature of the acid present. (See also p. 390.)

Oils containing *sulphonated fatty acids* must be well boiled with water by blowing steam through the mixture, in order to decompose the compound acid, thus:

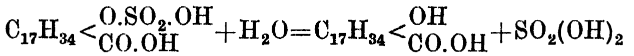

$$C_{17}H_{34}<\begin{matrix}O.SO_2.OH\\ CO.OH\end{matrix}+H_2O=C_{17}H_{34}<\begin{matrix}OH\\ CO.OH\end{matrix}+SO_2(OH)_2$$

sulpho-stearic acid. hydroxy-stearic acid. sulphuric acid.

To determine the sulphuric acid, the aqueous liquid, after separation from the greater part of the oil, is evaporated down to about 70 c.c., filtered bright and titrated, cold, with standard soda solution, using methyl-orange as indicator. The liquid may afterwards be acidified, precipitated with barium chloride, and the barium sulphate weighed, if desired.

Gravimetric Estimation of Free Fatty and Rosin Acids.—The free fatty and rosin acids contained in a sample of oil or fat may be separated and weighed in the following manner:—

Five grms. of the sample are dissolved in ether and rinsed into a separating funnel, into which a few drops of water have been placed to seal the tap. The ethereal solution is shaken repeatedly with small quantities (10–20 c.c. at a time) of a dilute solution of caustic soda (containing 20 c.c. of a 10 per cent. solution of NaOH and 10 c.c. of rectified alcohol made up with water to 100 c.c.) until all fatty acids are extracted (10 c.c. of the dilute soda solution, which is roughly seminormal, will dissolve 1·4 grm. oleic acid). The mixed aqueous extracts are first shaken with a little ether to remove traces of oil, then decomposed with dilute sulphuric acid, and shaken with ether to dissolve the liberated fatty and rosin acids. After washing the ethereal solution, it is distilled in a tared flask, and the residue is heated on the water-oven until constant in weight. Rosin acids may then be separated and estimated by Twitchell's process (p. 315), and, if desired, the neutral oil may be recovered by distilling the original washed ethereal solution.

IV. **Amount of Free Acid permissible in Lubricants.**—The amount of free acid permissible in a lubricating oil depends upon the nature of the oil and the

---

[1] *Jour. Soc. Chem. Ind.*, xxi. (1902), p. 75.

purpose it is used for, Refined, pale or red, pure mineral oils should not contain any acid whatever; dark-coloured mineral oils may be expected to contain traces of organic acids ranging, according to Holde, from 0·2 to about 2 per cent., expressed as oleic acid. Free mineral acid, which can only occur through imperfect refining, should not be present in any lubricating oil, but some free fatty acid must be allowed in most commercial fatty oils and fats. Experience shows that 3 to 4 per cent. of free fatty acid, calculated as oleic acid, is a practicable working limit, and no olive oil, tallow, or other oil or fat containing more than this percentage should be used as a lubricant. Special lubricating oils, such as "Germ process" oils, will not contain more than 2 per cent. of free fatty acid. For some purposes, such as ball- and roller-bearings, all free acid is considered inadmissible, and the lubricant used must be perfectly neutral or faintly alkaline in reaction.

V. **Process for refining Small Quantities of Oil.**—Neutral fatty oil, tallow or other fat, required in small quantity for the lubrication of delicate mechanism, instruments, brass taps, etc., can be prepared as follows: Take a good commercial sample of the oil or fat, containing not more than say 5–7 per cent. of free fatty acid, and place it in a bottle with one-third of its volume of caustic soda solution, prepared by mixing a 5 per cent. aqueous solution of caustic soda with half its volume of industrial methylated spirit and also some phenolphthalein. Stand the bottle in hot water, so as to raise the temperature of the contents to about 150° F., and then shake the oil and soda solution together thoroughly, but not too vigorously. If the crimson colour of the phenolphthalein is bleached, add more soda until the colour remains permanent on continued shaking. Then allow the liquids to separate while hot, in the bottle or in a separating funnel, and siphon or tap off the lower, aqueous liquid. Wash the oil by shaking it a few times with successive quantities of a mixture of water, two volumes, and methylated spirit, one volume, allow to stand until the aqueous liquid has completely separated, draw it off, filter the refined oil through a dry, pleated filter paper and heat it in a water-oven to a temperature not exceeding 212° F. until bright, then store in a dry stoppered bottle. Oil or fat refined in this way and kept in a dark, cool cupboard will remain neutral for years.

A simpler method, applicable to oils of sufficient fluidity, is to shake the oil thoroughly with a sufficient quantity of dry slaked lime to combine with more than the free acid contained in the oil, then allow to stand until the whole of the lime and soaps have settled, and filter the clear oil through dry filter paper into a dry bottle. This method introduces no moisture into the oil and removes every trace of free acid.

B.—DETECTION OF SAPONIFIABLE AND UNSAPONIFIABLE OIL.

Pure mineral oils and refined rosin oil free from rosin acids are chemically indifferent towards alkalis, but all the fatty oils, fats, and waxes when heated with caustic soda or caustic potash are saponified, with formation of glycerol or wax alcohols, and soaps. This difference of behaviour is the basis of the processes for the detection and estimation of fatty (saponifiable) oils and hydrocarbon (unsaponifiable) oils in the presence of each other.

I. Detection of Fatty Oil in Mineral Oil.

Lux's test, improved by Ruhemann,[1] depends upon the property possessed by quite small quantities of soap of causing the gelatinisation of mineral oil, as well as upon the frothing or foaming of soapy liquids when heated.

---

[1] *Jour. Soc. Chem. Ind.*, xii. (1893), p. 470.

3-4 c.c. of the suspected mineral oil are placed in a dry test-tube with a small piece of caustic soda, and the tube is heated in a paraffin bath for fifteen minutes to a temperature of 230° C. in the case of pale-coloured oils, or 250° C. in the case of dark mineral oils or cylinder oils. If very small quantities (as small as 2 per cent.) of fatty oil are to be looked for, a duplicate test is made at the same time with metallic sodium instead of caustic soda. On removing the tubes from the bath and allowing them to cool, the presence of a saponifiable oil is indicated by the gelatinisation (complete or partial) of the contents of one or both tubes, or by the appearance, on the surface of the oil, of a soapy froth, the amount of which is proportional to the quantity of saponifiable oil present. Both gelatinisation and the soapy froth may be observed. Holde states,[1] as the result of a large number of experiments, that by this test as little as 0·5 per cent. of fatty oil may be detected in pale mineral oils, 2 per cent. in dark-coloured oils, and 1 per cent. in cylinder oils.

II. Detection of Mineral Oil in Fatty Oil.

The following test by Holde depends upon the fact that an alcoholic solution of pure soap remains clear on the addition of a limited quantity of water; but in the presence of mineral oil, the addition of water causes the formation of a turbidity, due to the precipitation of the unsaponified mineral oil.

6 to 8 drops (Dunlop recommends 10 drops, =0·3 to 0·35 grm.) of the oil or fat are boiled for two minutes in a test-tube with 5 c.c. of a clear semi-normal solution of potash in alcohol (see p. 299). To the soap solution thus prepared distilled water is gradually added, in quantities not exceeding 0·5 c.c. at a time, well mixing after each addition, until from 0·5 to 15 c.c. have been added altogether. If unsaponifiable oil be absent the solution remains clear, even when mixed with the maximum proportion of water; but the presence of even 1 per cent. of mineral oil will cause the formation of a turbidity. Careful observation is needed after each addition of water, since the characteristic feeble turbidity produced by a very small proportion of mineral oil (0·5 to 2 per cent.), which appears after the addition of the first few drops of water, sometimes disappears again on the addition of more water, and may, therefore, easily be overlooked. Rosin oil, if present in smaller proportion than 12 per cent., is not detected. The higher alcohols formed on saponifying the fluid waxes do not precipitate at once on adding water, but remain dissolved in the soap solution for some considerable time; therefore, this test can be used for the detection of mineral oil in sperm oil (*Lobry de Bruyn*[2]). Dunlop[3] found this test capable of detecting as little as 3·5 per cent. of mineral oil in sperm oil, or 0·3 per cent. of paraffin-wax in lard or tallow.

C.—THE SAPONIFICATION VALUE.

I. Meaning and Use of this Value.

The reactions between caustic alkalis and the esters contained in oils and fats take place in definite proportions, and in the case of any single ester can be represented by an equation (see p. 141). Thus one molecule of every glyceride requires for saponification three molecules of potash, whilst one molecule of the ester of a monohydric alcohol requires one molecule of potash. The quantity of potash required for the saponification of any single ester, such as pure stearin or olein, can therefore be calculated, and serves to identify it,

---

[1] *Kohlenwasserstofföle und Fette* (1924), p. 78.
[2] *Jour. Soc. Chem. Ind.*, xiii. (1894), p. 426.
[3] *Ibid.*, xxvii. (1908), p. 64; *Analyst*, xxxiv. (1909), p. 524.

but the quantity required to saponify the mixed esters known as fatty oils, fats, and waxes can only be ascertained by experiment, and when expressed as a percentage [1] is called the "*saponification value*" of the oil, fat, or wax.

Reference to the table on p. 301 will show that the majority of saponifiable oils require about the same percentage of potash for saponification, the exceptions being rape oil, mustard oil, castor oil, and some of the fish oils, which require less than the average, and butter fat, palm-nut oil, coconut oil, and porpoise and dolphin jaw oils, which require considerably more. The waxes have characteristically low saponification values. Hydrocarbon oils, of course, have none. Hence, a knowledge of the saponification value enables us to detect, and frequently to approximately estimate, the proportion of hydrocarbon oil in a mixture, to identify in a pure state those oils and waxes which have characteristic values, and, to a limited extent, to detect the adulteration of one fatty oil with another having a different saponification value.

II. Determination of the Saponification Value.

For the determination of this value the following reagents are required:—

Approximately seminormal alcoholic potash, made by dissolving about 18 grms. of the purest obtainable potash in 500 c.c. of pure rectified alcohol. As potash "pure by alcohol" usually contains about 20 per cent. of water, this solution will be about seminormal in strength; if anhydrous potash be used, 14 grms. would be enough.

If made with impure spirit, the solution will rapidly assume a red or brown colour and will then be unfit for use, but if made with pure rectified alcohol it will slowly acquire a pale yellow tint which in no way interferes with the test. No difficulty will be experienced in dissolving the potash in the strong alcohol if the following plan be adopted: Introduce the potash and the alcohol into a 500 c.c. test mixer, insert the stopper, and invert the cylinder so as to bring the potash to the upper end. Then lay the cylinder upon the bench and raise the upper end upon a block at such an angle that the potash will not slide to the bottom; it will then very rapidly dissolve. When solution is complete, well mix the contents of the cylinder, allow to stand overnight, and filter through a dry filter paper into the reagent bottle, which should be closed by a rubber stopper and kept in a cool, dark cupboard.

Seminormal hydrochloric acid, accurately standardised with pure sodium carbonate, which has been heated to just below redness for five minutes and cooled in a covered platinum crucible in a desiccator immediately before weighing. 1 c.c. of strictly seminormal acid neutralises 0·02807 grm. KOH.

Phenolphthalein solution. (See p. 295.)

(*a*) **In determining the saponification value of a fatty oil or fat,** 2·5 grms. are weighed into a small wide-necked flask and 25 c.c. of the seminormal potash solution are added from a pipette. Exactly the same volume of potash solution is then delivered into an empty flask of the same size and shape. The two flasks are closed by corks having a groove filed in the side for the escape of vapour. The "blank" quantity is placed at once inside the water-

---

[1] Koettstorfer, who originated this test as a means for detecting the adulteration of butter, expressed his results in milligrammes of potash per gramme of fat, *i.e.* in parts per 1000, and, with the exception of Allen (*Comml. Org. Anal.*), most authors have followed his example. The acetyl values of oils are similarly expressed, but the Hehner and iodine values have always been expressed in percentages. For the sake of uniformity, the percentage system is adopted for all values given in this volume.

oven. The flask containing the oil is first of all heated on a steam bath until the alcohol commences to boil; it is then agitated with a rotary motion, to and fro, so as to break up the oil into small globules and facilitate the saponification, care being taken not to splash the liquid up on to the cork. When (in the case of a pure fatty oil) the globules of oil have entirely disappeared, or when (in the case of a mixed fatty and mineral oil) the oil and alkaline solution have been thoroughly boiled and agitated together, the flask is placed inside the water-oven. After fifteen minutes have elapsed, the "blank" quantity is taken out, mixed with about 1 c.c. of phenolphthalein solution, and carefully titrated with the seminormal acid until the crimson colour is just bleached; the flask containing the saponified oil is then similarly treated, and from the relative volumes of acid used the saponification value is calculated as shown by the following example:—

Weight of oil taken; 2·5 grms.

Volume of $\frac{N}{2}$ acid used for the "blank," . . .	26·05 c.c.
„ „ „ sample, . . .	10·55 c.c.
Difference; $=\frac{N}{2}$-KOH required for saponification, . .	15·50 c.c.

Therefore, 100 grms. of oil required $15{\cdot}5 \times 0{\cdot}02807 \times 40 = 17{\cdot}40$ grms. KOH for complete saponification; *i.e.* the saponification value is 17·40 per cent.

The quantity of potash used in this test should be largely in excess of the quantity required for saponification, and if it should be found on titrating with acid that the potash added has been nearly all used up, the test must be repeated, either with less of the oil or with a stronger potash solution. In general, correct results will be obtained by adhering to the proportions given above.

(*b*) *In testing mixed fatty and mineral oils,* especially when the proportion of mineral oil is large, it is safer to attach the flask, by means of a good ordinary cork, to a reflux condenser, and boil for an hour or more to ensure complete saponification, the "blank" quantity of potash solution being boiled in the same way for the same length of time. In testing two or more oils at the same time, if there are not enough condensers, the potash solutions should be measured into all the flasks, and those which have to wait kept closed with rubber stoppers until condensers are available, each liquid being titrated with acid as soon as it has been removed from the condenser. Wool fat would not be completely saponified in this way, and must be heated in a closed bottle under pressure with double normal alcoholic potash for about two hours (see p. 305). In titrating *dark-coloured oils,* alkali blue (see p. 296) may be used as indicator instead of phenolphthalein.

(*c*) The terms "*saponification value,*" "*Koettstorfer value,*" "*alkali value,*" employed by various authors, have the same meaning. The term "*saponification equivalent,*" used by Allen,[1] means the weight of oil or fat saponified by 56·1 parts of potash, or by one equivalent of any other alkali. Thus, the

$$\text{saponification value } (\%) : 100 :: 56{\cdot}1 : \text{the saponification equivalent},$$

$$\therefore \text{ the saponification equivalent} = \frac{5610}{\text{the saponification value}}.$$

The saponification equivalent of any glyceride is one-third of the mole-

---

[1] *Comml. Org. Anal.,* ii. (1910), p. 16.

cular weight; in the case of the ester of a monohydric alcohol it is identical with the molecular weight, and the same is true of the free fatty acids.

TABLE CII.—SAPONIFICATION VALUES OF SOME OILS, FATS, AND WAXES.

Class.	Name of Oil, etc.	KOH required to saponify 100 parts of the substance.
Vegetable Non-drying Oils and Fats.	Arachis (earthnut) oil,	18·6-19·7
	Ben oil,	18·5-18·8
	Castor oil,	17·6-18·7
	Coconut oil,	24·6-26·8
	Coconut 'oleine,'	25·8
	Hazel nut oil,	18·7-19·7
	Japan wax,	21·4-23·8
	Olive kernel oil,	18·2-18·4
	Olive oil,	18·5-19·6
	Palm oil,	18·9-20·6
	Palm nut oil,	24·2-25·5
Vegetable Semi-drying Oils.	Beech nut oil,	19·1-19·6
	Brazil nut oil,	19·3
	Cameline oil,	18·2-18·8
	Cottonseed oil,	19·1-19·7
	Cottonseed 'stearine,'	19·5
	Curcas oil,	19·2-19·3
	Maize oil,	18·8-19·3
	Mustard oil (black),	17·3-17·6
	,, ,, (white),	17·0-17·5
	Rape oil,	17·0-17·5
	Ravison oil,	17·8-17·9
	Sesamé oil,	18·8-19·5
	Soja bean oil,	18·9-19·3
Vegetable Drying Oils.	Candle nut oil,	19·0-19·5
	Hempseed oil,	19·0-19·3
	Linseed oil,	18·8-19·5
	Nigerseed oil,	18·9-19·2
	Poppyseed oil,	18·9-19·8
	Sunflower oil,	18·8-19·4
	Tung oil,	19·1-19·6
	Walnut oil,	18·9-19·7
Animal Oils and Fats.	Bone fat,	19·1-19·5
	Horse fat,	19·5-19·7
	Horse oil (drying oil expressed from horse fat),	19·6
	Horsefoot oil,	19·5-19·7
	Lard,	19·5-19·7
	Lard oil,	19·3-19·8
	Neatsfoot oil,	19·4-19·9
	Tallow (beef and mutton),	19·3-19·8
Marine Animal Oils and Fluid Waxes.	Cod-liver oil,	17·9-19·0
	Dolphin body oil,	19·7-20·3
	Dolphin jaw oil, strained from solid fat,	29·0
	Fish liver oils other than cod-liver,	14·0-19·3
	Menhaden oil,	18·9-19·3
	Porpoise body oil,	19·5-25·7
	Porpoise jaw oil, strained from solid fat,	25·4-27·2
	,, ,, ,, unstrained,	14·4
	Sardine oil (Japanese),	19·5-19·6
	Seal oil,	18·9-19·6
	Sperm oil (including Arctic),	12·0-13·7
	Whale oil,	18·4-19·4
Waxes (solid).	Beeswax,	8·8- 9·8
	Carnauba wax,	7·8- 8·8
	Spermaceti,	12·1-13·6
	Wool fat,	9·8-10·2
Blown Oils.*	Blown cottonseed oil,	21·3-22·5
	Blown maize oil,	20·9
	Blown rape and ravison oils,	19·5-21·6
	Blown seal oil,	22·1
	Blown shark, sperm, and whale oils,	20·1-23·9
Miscellaneous.	Ceresin (refined ozokerit),	nil.
	Colophony (American),	16·5-19·4
	Paraffin wax,	nil.
	Petroleum jelly (Vaseline),	nil.

* The values depend upon the conditions and time of blowing.

D.—APPROXIMATE ANALYSIS OF MIXED (BLENDED) OR COMPOUNDED LUBRICATING OILS.

It is obvious that the composition of a mixture of mineral oil and a single known fatty oil can be calculated from the saponification value of the mixture. Thus, if a mixture known to consist of rape oil and mineral oil have a saponification value, per cent., of 8·2, the percentage of rape oil in the mixture must be nearly 8·2×100÷17·3=47·4, and the percentage of mineral oil 100−47·4=52·6.

When the nature, and therefore the saponification value, of the fatty constituent is unknown, the possible error of the method becomes greater, but Gripper[1] has shown, by the analysis of several mixed lubricating oils, that the results obtained are sufficiently correct for commercial purposes when rapidity is of supreme importance. He adopts 20·08 per cent. as the mean saponification value of the fatty constituent, but this would be too high a figure unless blown oil (or coconut olein) were present in the mixture. Reference to Table CII. will show that values of 17 to 19 would give approximately correct results in the case of most fatty oils used for blending (other than sperm oil), and the saponification value of a blended oil multiplied by, say, 5·5 would give in many cases the approximate percentage of saponifiable oil present in the blended oil.

After determining the saponification value, Gripper again raises the alcoholic liquid to the boiling-point and pours it on to a filter paper which has been saturated with boiling water. The alcoholic solution of soap, etc., quickly runs through, leaving the greater part of the hydrocarbon oil on the filter. After washing once with boiling water, the specific gravity of this oil is determined by the alcohol method (p. 245). The viscosity can also be determined by Lidstone's Viscometer (p. 209).

E.—ESTIMATION OF TOTAL UNSAPONIFIABLE MATTER.

If the solution obtained by saponifying a mixed fatty and mineral oil with potash or soda be shaken with an immiscible solvent, such as ether or petroleum ether, or if the dried soap be extracted with petroleum ether or chloroform, all the unsaponifiable hydrocarbon oil is dissolved out, and may be obtained in a separate state by evaporation of the solvent, and the amount determined by weighing.

Commercial fatty oils and fats, quite free from added hydrocarbons, contain small quantities of unsaponifiable substances which, under similar circumstances, are extracted by the solvent; but in most cases the natural unsaponifiable matters (chiefly phytosterol, cholesterol, etc.) do not amount to more than from 1 to 1·5 per cent. The waxes, however, such as sperm oil, wool fat, beeswax, and carnauba wax, yield on saponification, instead of glycerol, monohydric alcohols which dissolve in the ether and may amount to from 35 to 55 per cent. of the wax saponified. Shark liver oil also frequently yields on saponification considerable quantities of solid hydrocarbons and alcohols. M. Tsujimoto[2] and A. C. Chapman[3] have independently found in the liver oils from certain varieties of shark as much as 80 per cent. and more of a highly unsaturated hydrocarbon ($C_{30}H_{50}$) to which the name "squalene" has been given by Tsujimoto and "spinacene" by Chapman.

In the analysis of lubricants, therefore, the determination of the unsaponifiable matter is not only a means of separating and estimating the

---

[1] *Chem. News*, lxv. (1892), p. 27.

[2] *J. Ind. Eng. Chem.*, **8** (1916), p. 889; **9**, (1917), p. 1098.

[3] *Jour. Chem. Soc. Trans.*, **111** (1917), p. 56.

proportion of hydrocarbon oil present, but it is also a means of identifying sperm oil and the waxes, ascertaining their purity, and determining their proportion in mixtures.

I. General Method for the Estimation of Unsaponifiable Matter in an easily Saponifiable Oil, Fat, or Fluid Wax, such as Rape Oil, Sperm Oil, etc.

The following reagents are required :—

Caustic Soda Solution.—250 grms. of pure caustic soda from sodium are dissolved in cold water in a deep porcelain basin, and the solution, when cold, is made up to 500 c.c. If not clear, it may be filtered through ordinary filter paper. The solution is preserved for use in a bottle closed by a rubber stopper. 2 c.c. contain, approximately, 1 grm. NaOH.

Alcohol.—Methylated alcohol free from naphtha may be used, but pure rectified alcohol of 0·830 sp. gr. is preferable.

Ether.—Redistilled methylated ether of sp. gr. 0·725.

(*a*) **The Process.**—Pour about 10 c.c. of the oil into a very small lipped beaker and take the exact weight. Then take a deep porcelain basin, 5½ inches in diameter, and a glass rod, both dry, and pour oil out of the beaker into the basin until exactly 5 grms. have been transferred. If a little too much is poured, it can be returned to the beaker in drops on the end of the rod. A solid fat is weighed similarly, but is taken out of the beaker on a spatula, which is subsequently rinsed into the basin with a little boiling alcohol or a few drops of ether.

Mix, in a stoppered cylinder, 4 c.c. of the caustic soda solution and enough alcohol to make 50 c.c. ; pour this into the basin, and boil *gently* over a small Argand-Bunsen flame, with stirring, until most of the globules of oil have disappeared. Then cover the basin with a clock-glass and keep the liquid gently boiling until it has become concentrated to about 12–15 c.c., which should be made to take at least half an hour so as to ensure thorough saponification. If the liquid should concentrate too rapidly, add 25 or 50 c.c. more alcohol and boil down again. The basin should be supported on a perforated disc of asbestos millboard to protect the sides from being overheated by the flame. Pour the hot soap solution into a globular separating funnel of about 300 c.c. capacity (fig. 113),[1] previously heated by rinsing with hot water in order to prevent chilling and solidification of the soap solution, and rinse the basin with small quantities of very hot water until all the soap is transferred. The volume of liquid in the separator should not exceed about 70–90 c.c. Pour, carefully, on the still hot liquid about 100–120 c.c. of ether, insert the stopper, and whilst holding the stopper and tap firmly fixed, shake the separator at first cautiously, under a running tap of cold water, for at least one minute, not too vigorously, so as to thoroughly mingle the ether and soap solution without emulsifying them. Then place the separator in a stand. One of four things will now happen.

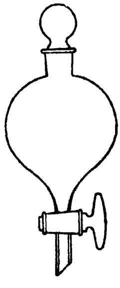

FIG. 113.

(*α*) The liquids will separate into two distinct layers, about equal in volume, the upper one an ethereal solution of the unsaponifiable matter and the lower a solution of soap. This is as it should be.

(*β*) The liquid will separate into *three* well-defined layers, or into two layers of which the upper is of much less volume than the lower. This shows that too much alcohol is present. Add small measured quantities of cold

---

[1] Made by cutting all but about 1½ inch of the stem off a bulb funnel, and filing the end obliquely.

water, 5 c.c. at a time, and reshake cautiously until the liquid separates into two layers only, of about equal volume.

(γ) The liquids will not separate, but present the appearance of a *nearly transparent* homogeneous fluid. Probably too much alcohol is present; if so, the cautious addition of small quantities of water, as in (β), will cause separation to occur.

(δ) The liquids form an *opaque viscid emulsion.* In this case there is probably not enough alcohol, and the remedy is to add more alcohol, 2 or 3 c.c. at a time, and cautiously mix until separation into two layers occurs either at once or on standing for a few minutes.

When the liquids have separated properly (allow about ten minutes for complete separation to occur) draw off the layer of soap solution into another separator.[1] Shake this again with ether (using about 70 c.c. this time), run it off into a third separator, and shake a third time with ether. Then mix all three ethereal layers in one separator, wash twice, each time with 10 c.c. of a 1 per cent. caustic soda solution containing 10 per cent. of alcohol, then wash six times with pure water, using 10 c.c. each time. Thoroughly drain off the water, pour the ethereal solution (in two portions) into a light, wide-necked, 8-oz. flask, previously weighed, and distil off the greater part of the ether from a hot-water bath. Then place the flask on the top of the water-oven, and let it stand there until the ether and water have entirely evaporated. The evaporation of the water may be hastened by surrounding the flask with a beaker from which the bottom has been removed, and by frequently running the liquid round the sides of the flask. Then let the flask cool, and weigh it. Replace it on the oven for ten or twenty minutes, cool, and reweigh. Repeat this until practically constant. By subtracting the tare of the empty flask, the weight of unsaponifiable matter in the 5 grms. of oil taken is obtained.

If the above directions are carried out, the whole operation, from weighing out the oil to the final weighing of the unsaponifiable matter, can be completed within three hours. Ordinary ether is preferable to petroleum ether for extracting the unsaponifiable matter; it boils at a lower and a constant temperature, evaporates more readily, and leaves no residue. Petroleum ether can be purchased which is completely volatile at 60° C.; but it must always be tested, and, if found impure, must be refractionated, rejecting all that boils above 60° C. When ordinary ether is used, it may be completely evaporated at such a low temperature that light mineral oil, which is sometimes used for adulterating rape and other oils, can be detected and determined without appreciable loss. Lewkowitsch has pointed out that ordinary ether usually extracts larger quantities of soap than petroleum ether; but, for ordinary purposes, the amount of soap extracted when the process is conducted as described above is negligible. In cases where special accuracy is required, traces of soap and saponifiable matter contained in the product of the first extraction may be removed by boiling it with alcoholic soda and re-extracting with ether; or, the unsaponified matter may be incinerated, as recommended by Lewkowitsch, and the soap present calculated from the alkalinity of the residue. Petroleum ether is, moreover, not a solvent for some kinds of unsaponifiable matter. Thus Lewkowitsch describes an experiment in which a sample of shark liver oil gave 10 per cent. of unsaponifiable matter, consisting of wax alcohols from spermaceti, when ordinary ether was employed, whereas petroleum ether extracted only from 1·38 to 3·73

---

[1] Before removing the stopper, drop a little ether upon the outside of the separator and blow upon it, so as to cool the glass by evaporation; this will reduce the pressure of the ether vapour inside, and will prevent drops of liquid from being expelled when the stopper is removed.

per cent. C. H. Thomson[1] also found that a shark oil which gave 15·64 per cent. of unsaponifiable matter to methylated ether gave less than 1 per cent. to petroleum ether, and R. T. Thomson and J. Sorley,[2] in making analyses of egg oil, obtained very much lower results with petroleum ether than with methylated ether.

J. M. Wilkie[3] has pointed out that the above process can be very much simplified and shortened by eliminating the factors which cause emulsification. Provided the soap solution is clean and free from suspended matter, emulsification is mainly dependent on two factors—alcohol concentration and the volume ratio of ether and soap solution—and to a minor degree, on temperature. Twichell has shown that the alcohol water ratio should be 1 : 4. Wilkie proceeds as follows:—

5 grms. of the oil or fat are saponified under reflux for half to one hour with 12·5 c.c. of 2N alcoholic potash, made by dissolving stick potash in absolute alcohol. The solution is transferred to a separator with 50 c.c. of water and extracted with successive quantities of 40, 30, and 30 c.c. of ether. The ethereal extracts are united in a clean separator containing 20 c.c. of water, which is run off without shaking. The ethereal solution is then thoroughly washed by shaking vigorously with 2, 5, and 30 c.c. of water, evaporated, and the residue weighed in the usual manner. Separation is usually almost instantaneous. In very cold weather it may be helped by keeping the soap solution warm, and in very hot weather by cooling the separator containing the soap solution and ether under a running tap. With sperm and similar oils, a fourth extraction is made with 30 c.c. of ether.

(*b*) *Modification in presence of much Mineral Oil.*—When much mineral oil is present, saponification in a basin is not a satisfactory method, because the oil does not entirely dissolve, but visible drops of mineral oil remain suspended in the liquid, and a more vigorous and longer boiling is necessary in order to ensure complete saponification. In such cases, it is better to weigh the oil into a flask and boil it with the alcoholic soda solution under a reflux condenser for an hour or more. Then pour the contents of the flask into a basin, boil down gently to 10–15 c.c., and proceed exactly as directed above, rinsing the flask as well as the basin into the separator, first with a little hot water and then with ether from the wash bottle.

(*c*) *Modification in presence of Wool Fat.*—Wool fat and lubricants containing it must be heated with alcoholic soda solution of double normal strength in a closed bottle under pressure for about two hours to ensure complete saponification.[4] An ordinary 4-oz. reagent bottle of fairly thick glass answers very well for this purpose, and after the oil or fat and the alkaline solution have been introduced,[5] an india-rubber stopper[6] is inserted and tied firmly down with string, leaving a loop at the top. This loop is suspended from a glass rod or stout brass wire fixed horizontally over a can of warm water, so that the bottle is immersed up to the neck in the water, which is then raised to the boiling-point and kept gently boiling. If the bottle will not sink sufficiently, a strip of lead may be wrapped round it and fastened by an india-rubber band. The bottle is removed from the water occasionally and the contents well mixed by circular agitation, taking care not to splash any liquid on to the rubber stopper. When saponification is complete the

---

[1] *Analyst*, li. (1926), p. 177.

[2] *Ibid*, xlix. (1924), p. 327.

[3] *Ibid*, xlii. (1917), p. 200.

[4] Lewkowitsch, *Jour. Soc. Chem. Ind.*, xi. (1892), p. 137; Herbig, *ibid.*, xiii. (1894), p. 1068.

[5] For 5 grms. of fat use 4 c.c. of 50 per cent. caustic soda solution diluted to 25 c.c. with absolute alcohol.

[6] This must be pure rubber, free from substitutes.

bottle is allowed to cool, the stopper is then taken out, the liquid is poured into a basin and proceeded with as directed above.

The formation of a *layer of white insoluble flocks* between the aqueous and ethereal liquids is characteristic of wool fat, and often indicates its presence. Lewkowitsch has shown that these flocks consist of an insoluble soap formed from fatty acids of high molecular weight: they do not belong, therefore, to the unsaponifiable matter, and should be separated from the washed ethereal liquid by filtration through a small dry filter paper. The same device is often useful for removing drops of water which might otherwise find their way into the distilling flask.

(*d*) *Modification in presence of Beeswax.*—Owing to the sparing solubility of myricyl alcohol in most cold solvents, the above method cannot be applied to the analysis of beeswax, carnauba wax, and substances containing large quantities of myricyl alcohol. When beeswax and carnauba wax are boiled with alcoholic soda solution under a reflux condenser, saponification readily takes place, and a clear or almost clear solution is obtained in a short time, but, immediately the liquid begins to cool, not only the wax-alcohol but the soap (sodium cerotate) solidifies on the sides of the flask, and before the contents have become nearly cold they form an almost solid mass. The best way to proceed in such cases (which are unlikely to occur in connection with the analysis of lubricants) is to extract the *dry* soap with chloroform as recommended by Horn and Grittner.[1] Five grms. of the sample are boiled, until thoroughly saponified, with 4 c.c. of 50 per cent. caustic soda solution and 100 c.c. of alcohol in a flask connected to a reflux condenser. The boiling-hot solution is poured into a basin, the flask well rinsed out with small quantities of boiling-hot alcohol, and the liquid evaporated to a small bulk over a steam-bath, with stirring. Some coarsely powdered pumice stone[2] is then added, and the contents of the basin are evaporated to dryness with continual stirring, so as to reduce the residue to small grains, and well dried in the steam oven. Any soap adhering to the basin is scraped off with a spatula, and the entire residue is transferred to a Soxhlet apparatus and extracted with chloroform which is subsequently evaporated and the residue weighed. The basin is rinsed into the apparatus with hot chloroform before the extraction is commenced. Two hours' extraction, if the apparatus is working well, will dissolve all the alcohols from 5 grms. of saponified beeswax; only traces are extracted in the second hour.

Sufficient pumice must be added to enable a granular non-pasty residue to be obtained. Sand, which is sometimes recommended, is less suitable than coarse pumice, and must, according to Grittner, be purified from calcium carbonate by washing with hydrochloric acid, in order to prevent the formation of lime soaps which are soluble in chloroform. Chloroform is used in preference to petroleum ether, as it does not dissolve the soda soap. It is, however, desirable to make sure that the unsaponifiable matter is free from soap by determining the ash of a portion, as recommended by Lewkowitsch. It is also desirable before evaporating the soap solution to add sufficient sodium bicarbonate to convert the excess of caustic soda into carbonate (2·1 grms. $NaHCO_3$ for 1 grm. NaOH). If petroleum ether be used, this is essential.

Wilkie[3] has found that the unsaponifiable matter in solid waxes, such as beeswax and wool fat, can be quite satisfactorily estimated by the wet method if the wax is mixed with a fatty oil, such as castor oil. He proceeds as follows:

---

[1] *Jour. Soc. Chem. Ind.*, vii. (1888), p. 696, and ix. (1890), p. 772.

[2] The fragments of pumice should pass through a sieve having 11 meshes to the linear inch, and should contain no powder which will pass a 24-mesh sieve.

[3] *Analyst*, xlii. (1917), p. 200.

0·5 grm. of the wax (carefully sampled so as to be truly representative of the bulk) and 4·5 grms. of castor oil are saponified under reflux with 12·5 c.c. of 2N alcoholic potash for 1 hour, and the process is completed exactly as described in Wilkie's modification of process (*a*) above, except that 40 c.c. of water at 30° C. are used instead of 50 c.c. of cold water in transferring to the separator, and extraction is made with 50, 40, 40, and 30 c.c. of ether. A correction is applied for the known unsaponifiable content of the castor oil used, and the process is carried out with extra care, owing to the small quantity of wax taken.

II. Estimation of Small Quantities of Saponifiable Matter in Mineral Oils.

In the analysis of mineral oils containing small quantities of fat or resin, it is preferable to determine the fatty or resin acids as described in section G (p. 312), and the hydrocarbon oil by difference. The percentage of fatty acids obtained, divided by 0·95, will give, approximately, the percentage of fatty oil.

F. COMPOSITION AND IDENTIFICATION OF UNSAPONIFIABLE MATTERS.

The unsaponifiable matter obtained in the analysis of lubricants may be expected to contain—

Hydrocarbons; including
    Mineral oil from petroleum or shale,
    Rosin oil,
    (Neutral tar oil from coal-tar),
    Hydrocarbons from distilled wool grease,
    Paraffin wax or ceresin,
    Petroleum jelly (vaseline),
    Hydrocarbons natural to oils, fats, and waxes.
Wax Alcohols, from sperm oil, wool fat, etc.,
Cholesterol from wool fat, liver oils, and all other animal oils and fats,
Isocholesterol, from wool fats,
Phytosterol (Sitosterol and Stigmasterol) from vegetable oils and fats,
Colouring matter (traces),
Unsaponified oil or fat,
Soap.

I. **Hydrocarbons,** whether liquid or solid, may be identified by their sparing solubility in alcohol. If a small drop of the unsaponifiable matter on the end of a thin glass or platinum rod, or in a platinum wire loop, be immersed in a little cold rectified alcohol in a test-tube which is held up between the eye and a window, pure hydrocarbon oil will show no sign of solution, and the drop will probably appear fluorescent at the edges; but if wax alcohols from sperm oil be present they will quickly dissolve and cause visible stream-lines in the liquid. If the unsaponifiable matter be solid the solvent alcohol may be gently warmed, sufficiently to melt it.

(*a*) *Fluorescence* is a very characteristic property of hydrocarbon oils, though all do not show it. Distinct fluorescence of the unsaponifiable matter or of its ethereal solution proves the presence of hydrocarbons; but a non-fluorescent appearance does not prove their absence. If the fluorescence be not readily observed, Allen recommends laying a glass rod, previously dipped in the oil, on a table in front of a window, so that the oily end of the rod projects over the edge of the table away from the window and can be seen against the dark background of the floor. Another plan is to make a broad streak of the oil on a piece of black marble, or on a sheet of glass lying on black paper or cloth. The fluorescence of hydrocarbon oil is, as a rule, greatly intensified by solution in ether, which frequently leads to its detection while the unsaponifiable matter is being extracted. Mineral oils which have been "debloomed" by chemical treatment (see p. 129) regain their fluorescence by treatment with an equal measure of strong sulphuric acid (*Allen*).

(*b*) Hydrocarbon oils are unacted upon when submitted to the *acetylation test* (p. 319). If the unsaponifiable matter after treatment with acetic anhydride has no saponification value, hydrocarbons alone are present.

(*c*) If the unsaponifiable matter consists entirely of hydrocarbons, the *specific gravity* should be determined by the alcohol method (p. 245). Mineral lubricating oils (also petroleum jelly and paraffin wax) usually range in specific gravity from about 0·860 to about 0·947 at 60° F., though the sp. gr. may go as high as 0·99; rosin oil is heavier, usually ranging from about 0·96 to 1·01; tar oils always exceed 1 in specific gravity and will therefore sink in water. For the examination of mixtures see section U (p. 374).

(*d*) **Petroleum Jelly** at the ordinary temperature is semi-solid, soft, and amorphous; **paraffin wax** is more or less hard and crystalline. Allen has shown that although in the solid state these substances are nearly of the same specific gravity, their densities in the liquid state at the temperature of boiling water are widely different; his results are summarised in the following table:—

Description.	Specific Gravity.	
	Solid at $\frac{15·5°}{15·5°}$ C.	Melted at $\frac{99°}{15·5°}$ C.
Petroleum Jelly (Vaseline) (9 samples),	0·856–0·909	0·804–0·855
Paraffin wax (7 samples), . . .	0·867–0·911	0·748–0·757

Allen's results at 99° were obtained with the Westphal balance, and as no correction was made for the expansion of the plummet, they are about 0·002 too high (*Alder Wright*).

(*e*) Mineral oils absorb variable amounts of *iodine*, according to the conditions of testing (see p. 331). Paraffin-wax and ceresin absorb less than 5 per cent. of iodine, petroleum jelly absorbs rather more (see Table CXII., p. 331). Rosin oils absorb from 43 to 48 per cent. of iodine (*Valenta*).

II. **The Wax Alcohols** which most frequently occur in lubricants are those derived from *sperm* or *bottlenose oil*. Their nature is at present unknown. When obtained from pure sperm or bottlenose oil, they are crystalline and almost colourless, having only a very pale greenish-yellow tint. Their consistence at the ordinary temperature is that of solid, soft fat, and they melt at 23·5° to 27·5° C. They dissolve easily in warm rectified alcohol, and the solution remains clear on cooling; if, therefore, the "unsaponifiable matter" from 5 grms. of oil is completely soluble in about 2 c.c. of cold rectified alcohol of sp. gr. 0·834, and remains clear on adding 50 c.c. more rectified alcohol,[1] it cannot contain an appreciable quantity of hydrocarbons, and probably consists

---

[1] Nash (*Analyst*, 1904, p. 3) has shown that a solution of sperm oil alcohols in absolute alcohol, and even in rectified alcohol, unless much diluted, dissolves mineral oil freely. Absolute alcohol cannot, therefore, be used for detecting mineral oil in sperm oil.

entirely of the mixed alcohols from sperm or bottlenose oil. These alcohols may be further identified by their iodine value, 60–80 per cent.; by their specific gravity at $\frac{100^\circ}{100^\circ}$ C., about 0·827; and by the acetylation test described on p. 319. When mixed with twice their volume of acetic anhydride, they dissolve easily when gently warmed, and the solution remains clear on cooling; the mixed acetates have a saponification value of 16·1 to 19 per cent., according to Lewkowitsch.

III. **The Mixed Alcohols from Wool Fat** are pale yellow, have the characteristic odour of wool fat and the consistence of wax. Melting-point, 44°–49° C. Iodine value, about 35–40 per cent. Specific gravity at $\frac{100^\circ}{100^\circ}$ C., about 0·957. They dissolve readily in warm rectified alcohol; but on cooling even a dilute solution, partial precipitation occurs. By fractional crystallisation from a hot, strong solution in alcohol or ether-alcohol, crystals of cholesterol are obtained, which may be identified by their melting-point, crystalline form, and colour reactions (see p. 350). The mixed acetates formed by boiling the alcohols with acetic anhydride require from 15·1 to 16·1 per cent. of potash for saponification. These properties easily distinguish the wool-fat alcohols (when pure) from those of sperm and bottlenose oils.

IV. **Beeswax and Carnauba Wax** are unlikely to occur in the analysis of lubricants. The presence of either wax could scarcely fail to be indicated by the insoluble character and comparatively high melting-point of the myricyl alcohol formed by saponification. This alcohol, mixed in the case of beeswax with some hydrocarbons, is the chief constituent of the " unsaponifiable matter " of both waxes; it is white or pale yellow in colour, very hard and brittle, soluble with difficulty in even boiling alcohol, and almost entirely crystallises out on cooling. Melting-point of the products from beeswax, 76° (owing to the hydrocarbons present), and from carnauba wax, 85°. Saponification value of the mixed acetates from beeswax, 10 per cent., and from carnauba wax, 12 per cent.

V. **Cholesterol and Isocholesterol** ($C_{27}H_{46}O$) form a large proportion of the unsaponifiable matter of wool fat. Cholesterol also occurs in smaller quantity in liver oils (shark-liver oil, cod-liver oil, etc.) and is characteristic of animal oils generally. On the other hand, very similar substances, the **" phytosterols "** (" cholesterol of plants "), are found in the unsaponifiable matter of rape and other vegetable seed oils and olive oil. Thus, **Sitosterol** ($C_{27}H_{46}O$) occurs in the oils of all seeds and fruits, **Brassicasterol** ($C_{28}H_{46}O+H_2O$) is found in rape oil, and **Stigmasterol** ($C_{30}H_{48}O+H_2O$) has been found in a number of oils and fats. All these alcohols are colourless and tasteless crystalline bodies, of high melting-point, insoluble in water, sparingly soluble in cold alcohol, but easily soluble in hot alcohol, ether, and chloroform. They may be distinguished, when in a pure state, by their melting-points and crystalline forms, which are given in Table CIII., p. 310.

According to Bömer, cholesterol and " phytosterol " when present together cannot be separated by crystallisation. The melting-point of the mixture in general approximates to that calculated from the melting-points of its components. The mixture crystallises in one form only, the crystals either approximating in form to " phytosterol " crystals or, if cholesterol be present in the greater proportion, differing in form from the crystals of either body.

To obtain the crystals, the unsaponifiable matter from 50 grms. of oil should be boiled with a small quantity of alcohol and the solution filtered hot.

The crystals deposited on cooling must then be purified by repeated recrystallisation, and examined under the microscope. They should be compared with the crystals obtained in the same way from pure samples of, say, maize oil (*sitosterol*), rape oil (*brassicasterol* and an alcohol resembling, but not identical with *sitosterol*), cod-liver oil (*cholesterol*), and wool fat (*cholesterol* and *isocholesterol*). No definite conclusions, however, as to the absence of cholesterol or "phytosterol" in the case of a suspected mixture can be drawn from the microscopic examination of the alcohols themselves. If this information be desired, the acetates must be prepared.

TABLE CIII.

	Cholesterol.	Isocholesterol.	'Phytosterol.'*
Melting-point, °C.	148·4–150·8 (*Bomer.*)†	137–138	138–143·8 (*Bomer.*)†
Crystalline form,	Thin rhombic plates of $C_{27}H_{46}O + H_2O$ from hot alcohol and ether. —— Anhydrous needles from chloroform.	Flocks from dilute alcohol; a jelly from concentrated alcoholic solution; needles from ether.	Tufts of needles $C_{27}H_{46}O + H_2O$ from hot alcohol; anhydrous needles from ether and chloroform.

* Sitosterol melts at 137·5° (Burian), 136·5° (Ritter), brassicasterol at 148° (Windaus and Welsch), stigmasterol at 170° (Windaus and Hauth).

† Point of complete fusion (corrected).

For the detection of vegetable oils in animal oils, Bömer[1] determines the melting-point of the cholesterol (phytosterol) acetate. The points of complete fusion of the pure esters are as follows:—

Cholesterol acetate, ...	114·3°–114·8° C. (corr.)
"Phytosterol" acetate, . . .	125·6°–137° C. (corr.)

The Process.—The unsaponifiable matter is isolated from 100 grms. of the oil or fat by saponification and shaking out the soap solution with ether, and is purified by resaponification and again extracting with ether. If it be desired to examine the alcohols as a preliminary test, the extracted matter may then be dissolved in a minimum quantity of absolute alcohol, allowed to crystallise, and the crystals examined microscopically to determine whether they appear to consist of "phytosterol," cholesterol, or a mixture; they are then returned to the alcohol and the latter is evaporated off. 2–3 c.c. of acetic anhydride are next poured over the dry residue, the dish is covered, the liquid is heated over a small flame until it boils, and the excess of acetic anhydride is evaporated off over a water-bath. The acetic esters thus obtained are dissolved in hot absolute alcohol (10 to 25 c.c. for 0·1 to 0·3 grm. of esters), a few c.c. more alcohol being added to prevent immediate crystallisation, and the clear solution is left to slowly evaporate at the ordinary temperature. When above half of it has evaporated, the crystals are collected on a very small filter and recrystallised from 5 to 10 c.c. of absolute alcohol, the process of recrystallisation being continued so long as the material lasts. The melting-point of the crystals is determined after the third and each subsequent crystallisation, and if the temperature of complete fusion be 117° C. (corr.) or higher, Bömer regards the presence of vegetable

---

[1] *Zeits. Untersuch. Nahr. Genussm.*, 1901, iv. 1070; 1902, 1018.

oil as certain. He states that from 1 to 2 per cent. of vegetable oils containing considerable quantities of "phytosterol," such as cottonseed, arachis, sesamé, rape, hemp, poppy, and linseed oils, can be detected in animal oils by means of this test; and of other vegetable oils, such as olive, palm, and palm kernel, from 3 to 5 per cent. can be detected.[1]

TABLE CIV.—PERCENTAGES OF UNSAPONIFIABLE MATTER OBTAINED FROM SOME FATTY OILS, FATS, AND WAXES.

Name of Oil, etc.	Unsaponifiable Matter, per cent.	
Arachis (earthnut) oil,	0·9 -1·2	Under 4 per cent.
Bone fat,	0·5 -1·8	
Candlenut oil,	0·8	
Castor oil,	0·4 -0·8	
Coconut oil,	0·18-0·3	
Cod-liver oil,	0·5 -1·5	
Cottonseed oil,	0·7 -1·6	
Curcas oil,	0·6	
Dolphin body oil,	2·01	
Fish liver oils other than cod-liver and shark-liver,	1·0 -2·2	
Hempseed oil,	1·0	
Horse oil (drying oil expressed from horse fat,	0·5	
Lard,	0·2 -0·4	
Lard oil,	0·5 -1·2	
Linseed oil,	0·9 -2·0	
Maize oil,	1·6 -2·3	
Menhaden oil,	0·6 -2·2	
Mustard husk oil,	3·3	
Neatsfoot oil,	0·5 -1·2	
Olive oil,	0·7 -1·5*	
Palm oil,	0·5 -1·25	
Poppyseed oil,	0·4 -1·2	
Porpoise body oil,	0·67-3·7	
Rape oil,	0·6 -1·3	
Ravison oil,	1·4 -1·7	
Seal oil,	0·35-1·0	
Sesamé oil,	1·0 -1·3	
Soja bean oil,	1·3 -1·5	
Tallow (beef and mutton),	0·5	
Tung oil,	0·74-0·78	
Whale oil,	0·65-3·7	
Porpoise jaw oil,	16·4	
Shark-liver oil (including dogfish, crampfish, and sunfish),	Very variable; 0·7 to 24·12 have been recorded.†	
Sperm oil (including Arctic),	34·3-43·6	
Beeswax, yellow,	52·3-55·6	
,, white,	50·0-54·4	
Carnauba wax,	52·4-55	
Spermaceti,	51·4-54·3	
Wool fat,	38·7-55·1	

* Olive-residuum oils may contain up to 3·3 per cent. of unsaponifiable matter.

† A. C. Chapman found 89·1 per cent. of unsaponifiable matter in the liver oil of certain fishes of the shark family, consisting mainly of an unsaturated hydrocarbon to which the name *Spinacene* has been given (*Chem. Soc. Trans.*, cxi. (1917), p. 56; see also Tsujimoto, *J. Ind. Eng. Chem.*, 1916, **8**, 889, 1917, **9**, 1098).

For the separation of cholesterol and "phytosterol" from mixtures of mineral oils and fatty oils, Marcusson saponifies, and shakes the alcoholic solution first with petroleum spirit to extract the mineral oil. He then drives off the alcohol and shakes with ethyl ether to extract the cholesterol and "phytosterol."

The test is based upon Bömer's observation that the higher aliphatic alcohols are not completely extracted from an alcoholic soap solution by petroleum ether.

Cholesterol gives several characteristic colour reactions (see p. 350) which

---

[1] For further and later details of this test, the modifications necessary in the presence of paraffin-wax, and other methods for separating and identifying the different "sterols," reference should be made to Lewkowitsch, *Chemical Technology*, i. (1921), pp. 600–611.

distinguish it from isocholesterol, but not from "phytosterol," which gives the same reactions.

TABLE CV.—PROPERTIES OF THE MIXED ALCOHOLS, ETC. ("UNSAPONIFIABLE MATTER"), OBTAINED FROM WAXES.

Name of Wax, etc.	Properties of Mixed Alcohols, etc.				Saponification Value of the Mixed Acetates, per cent.
	Melting-point, °C.	Specific Gravity at $\frac{100^\circ}{100^\circ}$ C.	Iodine Value.	Increase of Weight on Acetylating, per cent.	
Sperm oil, . . Arctic sperm oil,	23·5°–27·5°	0·827	59·5–80·35	15·7	16·1–19·0
Wool fat, . . .	44°–49°	0·957	35–40	12·2–12·7	15·0–16·1
Beeswax, . . .	75°–76°	0·8239	..	6·5–7·7	9·9–10·3
Carnauba wax .	85°	0·8426	..	10·2	12·3
Cholesterols (theory), ...			68·3	11·3	13·55
,, (experimental results by Lewkowitsch),			67·7	..	13·5

Note.—Some of the results in this table were obtained with single samples of the waxes in question, and therefore require confirmation.

VI. **Unsaponified Oil or Fat** will not occur in more than traces if saponification has been properly carried out, and **Soap** should not occur at all. If there be any reason to suspect the presence of either, the ether residue must be purified by boiling it with alcoholic soda (say 2 c.c. of 50 per cent. NaOH solution and 25 c.c. alcohol) under a reflux condenser for half an hour and re-extracting with ether after evaporating off the alcohol and diluting with water. If wool fat be suspected, the resaponification must be conducted under pressure with alcoholic soda of double normal strength.

G.—ESTIMATION AND IDENTIFICATION OF THE SAPONIFIABLE OIL IN MIXED (BLENDED) OR COMPOUNDED OILS.

In the analysis of blended or compounded lubricating oils, consisting of a mixture of mineral oil and fatty oil, it is usually sufficient to estimate the percentage of mineral oil directly, and the saponifiable oil by difference. But it is often necessary to liberate the fatty acids from the soap solution, in order to identify the fatty oil, and this may easily be done quantitatively, giving a number from which the percentage of fatty oil can be calculated. The details of manipulation are a continuation of the process for determining the total unsaponifiable matter. (E, p. 302).

The soap solution, which has been freed from mineral oil and other unsaponifiable matter by shaking three successive times with ether, is mixed with the first two aqueous washings of the mixed ethereal liquids and treated with a sufficient excess of dilute sulphuric acid to decompose the soap and liberate the fatty acids. The acid liquid is mixed with 50–70 c.c. of ether, well shaken in the separator, and, after allowing sufficient time for the ether to rise, the aqueous portion is drawn off into another separator, where it is again shaken with ether. The ethereal liquids are mixed together in one separator, thoroughly washed by shaking six times with 10 c.c. of pure water each time, then poured into a tared flask, and the bulk of the ether distilled off. The flask is then placed on the top of the water-oven and heated, until all water and ether have evaporated and the weight remains practically constant.

In the absence from the original sample of the following:—

Sperm and bottlenose oils,
Porpoise and dolphin jaw oils,
Shark liver oil,
Palm-nut and coconut oils,
Wool fat,
Blown oils,
Soap,
Rosin,
Free fatty acids,

the percentage of fatty acids obtained, ÷ 0·957, will give, approximately, the percentage of fatty oil in the sample. Fatty acids existing in the original sample, either in the free state or as soap, must previously be separated as described in the analysis of greases (p. 406). Rosin acids, if present, must be determined by Twitchell's process (p. 315) and the amount deducted.

If the saponifiable oil consist entirely of blown rape or blown cottonseed oil the divisor becomes approximately 0·85 instead of 0·957, but special washing with hot water is required to remove the soluble fatty acids (see p. 314). In the presence of sperm oil and wool fat the problem becomes more complicated. The unsaponifiable matter in that case contains wax alcohols, and must be analysed by the acetylation process (p. 321).

As there is no known means of separating, without decomposition, a fatty oil or fat from a heavy mineral oil, the identification of the fatty oil in such mixtures depends upon the identification of the mixed fatty acids. For this purpose, the following determinations are available:—

1. *The melting-point* or, preferably, the *solidifying-point* ("*titer test*") (table on p. 274).
2. *The sp. gr. at* $\frac{100^\circ}{100^\circ}$ *C.* (table on p. 251).
3. *The iodine value* (table on p. 329).
4. *The saponification or neutralisation value.*

The fatty acids used for the determination of the iodine value must not have become oxidised, otherwise a low result will be obtained. After distilling off the ether the flask should, therefore, be closed by means of a cork carrying two tubes, in order that a current of dry carbon dioxide gas may be passed through the flask while heating on the steam bath.

The saponification or neutralisation value is best determined in the same manner as the saponification value of an oil or fat (p. 299), viz. by heating 2·5 grms. with approximately seminormal alcoholic potash in excess, and titrating back with accurate seminormal hydrochloric acid. Theoretically, it should be sufficient to dissolve the fatty acids in alcohol and neutralise with standard potash solution in the cold, but if any undecomposed esters, or lactones, are present, a low result is obtained unless the potash be in excess and the liquid heated.

In the absence of soluble fatty acids, the neutralisation value of the mixed fatty acids multiplied by the Hehner value of the oil will give the saponification value of the oil, *i.e.* the neutralisation value ×0·957 will give, approximately, the saponification value of the oil or fat from which the fatty acids have been derived.

H.—INSOLUBLE FATTY ACIDS (HEHNER VALUE).

The process for estimating the *total fatty acids* described in the preceding section (p. 312) is based upon the assumption that they are entirely, or almost entirely, insoluble in water and non-volatile, and such is, as a rule, the case. A few oils and fats, however, contain a considerable proportion of soluble and volatile fatty acids, notably cow's butter, dolphin jaw oil, and porpoise jaw oil. In such cases, the insoluble acids must be estimated by a special process. Hehner was the first to show that the percentage of insoluble fatty acids contained in genuine butter fat is fairly constant, and that by its estimation the adulteration of butter with foreign fats can be detected; the percentage of insoluble fatty acids contained in an oil or fat is therefore known as the "*Hehner value.*" As usually determined, it includes the unsaponifiable matter of the oil or fat.

It has been shown[1] that the changes caused by "blowing" oils include a partial conversion of the insoluble acids into soluble and volatile acids; the presence, therefore, of "blown" oil in castor oil would be indicated by a reduction of the percentage of insoluble fatty acids, of which genuine castor oil contains upwards of 95 per cent.

To determine the Hehner value of a fatty oil or fat, the fatty acids must be washed with boiling water until the washings are no longer acid. The following is a convenient method of operating: Saponify 5 grms. of the oil with alcoholic soda, as directed in E, I. (p. 303), and after saponification is complete, evaporate to dryness over a steam-bath, and heat to remove alcohol. Dissolve the soap in hot water, and rinse the solution into a beaker-flask, the total volume being about 250 c.c. Liberate the fatty acids with dilute sulphuric acid, allow to stand on the steam-bath until the fatty acids have melted to a clear layer upon the surface of the liquid, then pour the whole carefully into a separating funnel previously rinsed with hot water. Support the separator over a wet filter paper contained in a jacketed hot-water funnel, and allow the clear liquid to run into the filter at a sufficient speed to keep it nearly full. The filtrate should be bright. Do not allow the oily layer to pass on to the filter, but return it to the original beaker-flask, and having added about 150–200 c.c. of boiling water, thoroughly churn the fatty acids and water together by circular agitation. Allow to stand again until the acids have risen, carefully decant into the separator, and run the aqueous portion through the wet filter as before. Repeat this washing five times more, but collect the last washing in a separate vessel, add a few drops of phenolphthalein solution, and find how much decinormal soda is required to produce a pink colour. Make a similar experiment with the same quantity of the hot distilled water used in washing the fatty acids. If practically the same number of drops are required in both experiments (disregard a difference of one or two drops) the washing is complete. When this is the case, allow the insoluble fatty acid layer to pass on to the filter paper, and let the water drain away; well drain, also through the filter, the separator and the beaker-flask. So long as the paper remains thoroughly wet, the fatty acids will not run through the paper. Transfer the wet filter paper containing the fatty acids to a dry funnel supported over a small weighed beaker, and place it in the water-oven until the filter has dried and the greater part of the fatty acids have drained through into the beaker. Then place the funnel containing the oily filter paper over a weighed flask, and, when cold, thoroughly wash the paper with ether, allowing the latter to run into the flask, also rinse the separating funnel and the beaker-flask[2] with

---

[1] See p. 159.

[2] These may be previously dried by placing them on the water-oven, or they can be rinsed with ether while wet.

ether, passing the liquid through the same filter paper. Then distil off the ether, and heat both the flask and the small beaker until constant in weight. Deduct the weights of the two vessels, and the difference is the weight of the insoluble fatty acids.

In the presence of hydrocarbons or waxes, the soap solution obtained by saponification must first be extracted with ether, as described in E, I. (p. 303), then poured into a basin, gently heated over a steam-bath, with a cover on the basin, to expel the dissolved ether, thoroughly boiled to evaporate the alcohol, and then acidified and treated as described above.

Qualitative Preparation of Insoluble Fatty (and Rosin) Acids.—If it be required merely to prepare the insoluble fatty (and rosin) acids, without making a quantitative determination, the following method may be employed:—

Saponify in a covered basin, by thorough boiling with alcoholic soda, a weighed quantity of the oil sufficient to give the required quantity of fatty acids, using for every 5 grms. of oil 4 c.c. of an aqueous solution of caustic soda containing 50 grms. in 100 c.c. mixed with from 50 c.c. to 150 c.c. of industrial spirit, 150 c.c. being sufficient for 50 grms. of oil. When saponification is complete, add boiling water and boil until the alcohol is expelled, 1 litre of water being added for 50 grms. of oil and replaced as it evaporates. Add sufficient dilute sulphuric acid to liberate the fatty acids, gently boil until they form a clear layer on the surface of the liquid, then, by means of a large pipette with a flexible mouthpiece, draw off the watery fluid. Boil the fatty acids in the basin several times with water, drawing off the water with the pipette each time, then pour them on to a wet filter contained, if necessary (*i.e.* if the fatty acids have a high melting-point), in a hot-water funnel, and wash with boiling water until the washings are practically neutral to litmus or phenolphthalein. Pierce the filter, collect the acids in a dry beaker, and heat in the water-oven until quite clear and free from visible water.

Table CVI. contains the Hehner values of most oils and fats which are likely to occur in lubricants.

TABLE CVI.—HEHNER VALUES.

Name of Oil or Fat.	Hehner Value. Percentage of Insoluble Fatty Acids and Unsaponifiable Matter.		
Most vegetable and terrestrial animal oils and fats, except wool fat,	94–97 Average about 95·5		
Coconut oil,	82·4–90·5		
Japan wax,	89·8–90·7		
Palm nut oil,	91·1		
Marine animal oils, except sperm and shark-liver, but including dolphin body oil,	92·8–96·5 Average about 95		
Dolphin jaw oil (strained),	66·3		
Porpoise body oil,	85·5–91·0		
Porpoise jaw oil (strained),	68·4 and 72·1		
Blown cottonseed oil,	85·5	82·6	89–92
„ rape oil,	84·7	82·2	
„ ravison oil,	..	83·5	
„ linseed oil,	86·7	..	..
„ maize oil,	..	82·3	..
„ seal oil,	73·4	..	..
	*	†	‡

* Fox and Baynes; mean results. † Lewkowitsch; single samples. ‡ Jenkins.

I.—ESTIMATION OF ROSIN (COLOPHONY).

The fatty acids obtained by either of the processes described in sections G and H include the rosin acids, if rosin be present. If an estimation of the rosin be desired, Twitchell's process[1] is the best to adopt. It depends upon

---

[1] *Jour. Soc. Chem. Ind.*, x. (1891), p. 804.

the fact that when a solution of fatty acids in absolute alcohol is saturated with hydrochloric acid gas the ethyl esters of fatty acids are formed. Rosin acids similarly treated in the cold are only acted upon to a small extent, and can be separated from the esters by treatment with weak caustic potash solution in the cold, which dissolves the rosin acids, the esters remaining insoluble. The details of the process are as follows:—

From 2 to 3 grms. ot the melted mixture of fatty and rosin acids are poured into a dry graduated unstoppered cylinder of 50 c.c. capacity. The acids are dissolved in absolute ethyl alcohol,[1] using 10 c.c. for every gramme of acids, and dry hydrochloric acid gas, in a moderate stream, is passed through the solution until saturated, the cylinder being kept quite cold by immersion in a beaker of iced water.[2] The hydrochloric acid gas may be prepared in a dry state by acting upon lumps of sal ammoniac with concentrated sulphuric acid in a Kipp generator, and is passed into the liquid through a wash-bottle containing strong sulphuric acid. The gas is rapidly absorbed, the liquid is stirred at frequent intervals, and the esters separate in oily drops. When the alcoholic liquid is saturated (30–45 minutes are required), the cylinder is removed from the iced water and allowed to stand for about half an hour to ensure complete esterification. It must not stand too long, otherwise low results are obtained. The liquid is then diluted in a flask with about five times its volume of boiling water, and heated on the steam-bath until some of the alcohol has evaporated and the esters, with the rosin acids in solution, form a clear layer upon the surface (about forty minutes is long enough). The contents of the flask are poured into a separating funnel, and the flask as well as the gas delivery tube is rinsed with ether, which is poured into the separator. About 50 c.c. more ether are added, the contents of the separator are cooled, well shaken, and allowed to stand for the ether to rise. The acid liquid is drawn off into another separator and shaken again with a little ether. which is added to the first, and the ethereal solution is then washed once with about 10 c.c. of cold water, which is drawn off. It is then shaken in the funnel with 40 c.c. of a weakly alcoholic caustic potash solution, containing 1 gramme of caustic potash[3] and 10 c.c. of alcohol in 100 c.c., by which the rosin acids are immediately saponified and dissolved. After drawing off the alkaline liquid into a second separator, the ethereal solution is further washed with three separate quantities of 15 c.c. each of the weak potash solution. The whole of the alkaline solutions are mixed in the second separator, shaken with about 30 c.c. of ether and allowed to thoroughly separate. The alkaline solution is again tapped off into a clean separator, the ether is given one washing with about 15 c.c. of the weak potash solution, which is added to the main bulk of the rosin soap solution, and the whole is then decomposed with dilute sulphuric acid and shaken with ether to dissolve the liberated rosin acids. The ethereal solution, after washing several times with small quantities of cold water, is run through a dry filter paper into a weighed flask, the ether is evaporated, and the residual rosin acids are heated in the water-oven until constant in weight. They should be quite hard and brittle. The weight obtained, multiplied by 100 and divided by the weight of mixed acids taken, gives the percentage of rosin acids.

Lewkowitsch,[4] who has extensively investigated this process, finds that the amount of rosin acids generally falls short of the truth. Evans and Black

---

[1] Methyl alcohol is said to give lower results than ethyl alcohol.

[2] Evans and Black state that the temperature must not rise above 20° C., nor must the stream of hydrochloric acid be too rapid, otherwise low results are obtained. *Jour. Soc. Chem. Ind.*, xiv. (1895), p. 689; also *Analyst*, xx. (1895), p. 60.

[3] Caustic soda must not be substituted for caustic potash, as, with the former, the extraction of the rosin acids in presence of the esters is unsatisfactory and incomplete.

[4] *Jour. Soc. Chem. Ind.*, xii. (1893), p. 503.

conclude that the loss is mainly due to unsaponifiable matter contained in rosin, which is not dissolved by the caustic potash solution. Six samples of rosin were found by them to contain from 5 per cent. to 9·71 per cent. of gummy matter unsaponifiable by alcoholic potash. If we assume that the average amount of unsaponifiable matter is 8 per cent., the percentage of rosin acids divided by 0·92 will give, approximately, the percentage of colophony that the rosin acids obtained by Twitchell's process are equivalent to.

J.—VOLATILE FATTY ACIDS (REICHERT AND REICHERT-MEISSL VALUES).

The Reichert Process.—As has already been stated, a few oils and fats yield a considerable proportion of fatty acids soluble in water, and volatile when the liquid is distilled. By distillation in a current of steam, complete separation of the volatile and non-volatile acids can be effected,[1] but the process is very tedious. In Reichert's process only a portion of the volatile acids are distilled over, but by working under strictly defined conditions uniform results are obtained.

In the process, as originally described,[2] 2·5 grms. of the fat were saponified with an alcoholic solution of caustic soda, the alcohol was completely evaporated off, the soap dissolved in 50 c.c. of water, decomposed by adding 20 c.c. of dilute sulphuric acid, and distilled until exactly 50 c.c. had come over. The distillate was then mixed with a few drops of litmus solution and titrated with decinormal alkali, the number of cubic centimetres required being recorded. Under these conditions, the distillate from cow's butter required not less than 13 c.c. of decinormal acid for neutralisation, while the fats used in the manufacture of artificial butter required less than 0·5 c.c.

The Reichert-Meissl Process.—Reichert's process has undergone a variety of modifications in detail,[3] and in one of the most convenient of these, saponification is effected with a mixture of caustic soda solution and glycerol (*Leffmann and Beam*), by which the evaporation of alcohol is avoided; also 5 grms. of fat are used instead of 2·5 grms. (*Meissl*), by which the volume of standard acid used in titrating is nearly, but not quite, doubled. This process, which is chiefly useful in the analysis of butter fat, is required in the analysis of such lubricants as porpoise oil; it may also find occasional application in the detection of blown oils. The following reagents are required:—

1. *Glycerol Soda.* Made by mixing together 30 c.c. of aqueous caustic soda solution, containing 50 grms. NaOH in 100 c.c., and 170 c.c. of pure concentrated glycerin. This reagent is kept in a bottle closed with a rubber stopper.
2. *Dilute Sulphuric Acid.*—30 c.c. of pure concentrated sulphuric acid diluted with distilled water to 100 c.c.
3. *Decinormal Sulphuric Acid,* accurately standardised.
4. *Caustic Soda Solution* of approximately decinormal strength. A 10. c.c. pipetteful of this solution must be tinted with phenolphthalein and the strength determined by titration with the decinormal sulphuric acid.
5. *Phenolphthalein Solution.* (See p. 295.)

To determine the Reichert-Meissl value, a dry conical flask of 300 c.c. capacity is counterpoised on the balance. As nearly as possible 5 grms. of

---

[1] Goldmann, *Chem. Zeit.*, 1888, xii. p. 183; xiv. p. 216; xx. p. 317; *Jour. Soc. Chem. Ind.*, vii. (1888), pp. 238 and 348. Beal, *Jour. Amer. Chem. Soc.*, xvi. (1894), p. 673; *Jour. Soc. Chem. Ind.*, xiv. (1895), p. 197.

[2] *Zeits. f. Anal. Chem.*, xviii. p. 68.

[3] For a full account, see Richmond, *Analyst*, xvii. (1892), p. 171.

the oil or melted fat are dropped into the flask and the exact weight taken (in the case of a melted fat after becoming quite cold). 20 c.c. of the glycerol-soda are added, and the flask is heated over an Argand-Bunsen flame turned rather low. The liquid will foam, and to control this and hasten the operation the flask is frequently agitated. Heating and agitation are continued until practically all the water has been driven off, which will take about ten minutes; saponification will then be complete, and the flask is withdrawn from the flame and the soap dissolved by adding 135 c.c. of cold water. The first portions of water should be added drop by drop, and the flask shaken between each addition to avoid violent foaming. When the soap is dissolved, 5 c.c. of the dilute sulphuric acid are added, a few small fragments of pumice are dropped in, and the liquid is distilled until 110 c.c. have been collected. The tube connecting the flask to the condenser should have a large bulb to arrest the splashings and return them to the flask. The condensing tube should be of glass, and the rate of distillation such that the above amount of distillate is collected in about thirty minutes.

The whole of the distillate, if clear, is mixed with about 0·5 c.c. of phenolphthalein solution, and as many 10 c.c. pipettefuls of the standard caustic soda solution are added as are required to produce a strong crimson coloration; the liquid is then carefully titrated with decinormal sulphuric acid until the crimson colour is just discharged.

The distillate, if not clear, is passed through a dry ribbed filter, and 100 c.c. of the clear filtrate are titrated; in this case, the volume of decinormal soda neutralised is increased by one-tenth.

A blank distillation must be made to determine the amount of decinormal soda required by the materials employed; with a good quality of glycerin this will not exceed 0·5 c.c.

EXAMPLE.

5 grms. of blown rape oil gave 110 c.c. of distillate, which was filtered. 100 c.c. of the filtrate were mixed with 10 c.c. of standard caustic soda solution, and 4·76 c.c. of decinormal H_2SO_4 were required for neutralisation.

10 c.c. of standard soda required	9·78 c.c. $\frac{N}{10}H_2SO_4$
Deduct	4·76 c.c.
Difference = volume of decinormal alkali required for 100 c.c. of distillate . . .	5·02
+ $\frac{1}{10}$th . . .	·50
∴ Volume required for 110 c.c. . . .	5·52
Deduct for blank experiment	·10
Reichert-Meissl value (*volume of decinormal alkali required for* 5 *grammes of oil*) . .	5·12

This process was at one time most extensively used in the analysis of butter fat,[1] 5 grms. of which, when genuine, usually yield a distillate requiring from 24 to 34 c.c. of decinormal alkali. Results obtained by different analysts with other oils are given in Table CVII.

---

[1] The standard method adopted by a Joint Committee of the Government Laboratory and the Society of Public Analysts for the analysis of butter-fat is a later modification known as the Reichert-Wollny Process. (See the *Analyst*, 1900, p. 309.)

TABLE CVII.

Description of Oil, etc.	Reichert Value =c.c. of N/10 Alkali required for 2 5 grms	Reichert-Meissl Value =c c. of N/10 Alkali required for 5 grms.
Arachis (earthnut) oil,	...	0·0 - 1·6
Candlenut oil,	...	1·2
Castor oil,	1·4	1·1 - 4·0
Coconut oil,	3·5 - 3 7	6·7 - 8·4
Cod-liver oil,	0 2 - 0·7	Below 1·0
Cottonseed oil,	0·3	0 7 - 0 9
Croton oil,	...	12 1 -13 6
Curcas oil,	...	0·28- 0·55
Dolphin body oil,	5·6	...
Dolphin jaw oil (skimmed and strained),	65·92	...
Hazel nut oil,	...	0 99
Horse fat,	0·3 - 0·4	1·6 - 2·1
Horse oil,	...	0·2 - 0·35
Lard,	...	0·0 - 1·1
Lard oil,	...	0·0
Linseed oil,	...	0·0 - 0·9
Maize oil,	0·33- 4·3	...
Menhaden oil,	1 2	...
Neatsfoot oil,	...	0·9 - 1·2
Nigerseed oil,	...	0·11- 0·63
Olive oil,	0·3	0·45- 1·5
Palm oil,	0·5 - 0·8	0·7 - 1·9
Palm nut oil,	2·4	5 0 - 6·8
Poppyseed oil,	...	0·0 - 0·6
Porpoise body oil,	11-12 *	42·1 †-81·4 ‡
Porpoise jaw oil (skimmed and strained),	47 8 -56·0	131·6
Porpoise jaw oil (unstrained),	2 08	...
Rape oil,	0·3	0·0 - 0·8
Seal oil,	0·07- 0·22	...
Sesamé oil,	0·35	1·2
Sperm oil (including Arctic),	1·3 - 1·4	...
Sunflower oil,	...	0·5
Tallow,	0·25	1·0 - 1·2
Walnut oil,	...	0·0
Whale oil,	0·7 - 2·0	...
Wool fat (crude),	...	6·5
Blown East India rape oil,	...	5·26- 8·8
,, ravison oil,	...	5·43
,, cottonseed oil,	...	7·06

* Allen. † Schneider and Blumenfeld. ‡ Thomson and Dunlop.

It will be seen that the process is chiefly of value in the analysis of (besides butter fat) porpoise and dolphin oils and croton oil. It would not be of much service for the detection of blown oils, unless these were present in large quantity.

K.- ACETYLATION TEST (THE ACETYL VALUE).

The action of acetic anhydride (acetyl oxide) upon alcohols and hydroxylated fatty acids is applied in the analysis of lubricants both in the examination of unsaponifiable matter containing or suspected to contain wax alcohols, and also in the analysis of castor oil.

I. Acetylation of Alcohols.

When the alcohols are heated with acetic anhydride they are converted into acetates (esters), the hydrogen of their hydroxyl group or groups being replaced by acetyl, C_2H_3O. Thus, in the case of cetyl alcohol (from spermaceti) the following reaction takes place :—

$$\underset{\text{Cetyl alcohol.}}{C_{16}H_{33}OH} + \underset{\text{Acetic anhydride.}}{(C_2H_3O)_2O} = \underset{\text{Cetyl acetate.}}{C_{16}H_{33}O.C_2H_3O} + \underset{\text{Acetic acid.}}{C_2H_4O_2}$$

Glycerol, $C_3H_5(OH)_3$, is similarly converted into tri-acetin $C_3H_5(OC_2H_3O)_3$, but this reaction does not interest us here, since glycerol does not occur in the "unsaponifiable matter." Hydrocarbons are unacted upon. In the case of the monohydric alcohols, cholesterol, and phytosterol, the esters formed are crystalline bodies, insoluble in water, which can be washed free from acetic acid and weighed. The saponification values of these esters are characteristic, and afford a means of identifying the waxes, as well as a method of determining the proportion of a single known wax, such as sperm oil or wool fat, in a mixture containing hydrocarbons. The process is carried out as follows :—

A quantity of not less than 2–3 grms. of the unsaponifiable matter is boiled with acetic anhydride in a small flask under a reflux condenser for half an hour. If the *yield* of acetates is to be determined, the weight of the substance taken must be exactly known, and the flask must also be tared. 1 c.c. of acetic anhydride per grm. of substance is sufficient, but if the available weight of substance be small, 2 c.c. per grm. may be used in order to give a sufficient quantity of liquid to boil. If the unsaponifiable matter consist chiefly of alcohols, it will dissolve completely in the hot liquid ; but if a considerable proportion of hydrocarbons are present, they will float on the liquid, and may give rise to explosive ebullition ; in this case, a few small fragments of ignited pumice stone should be dropped into the flask.

The contents of the flask are next diluted with boiling water and heated over the steam-bath, with frequent agitation, for a few minutes, in order to convert the unchanged acetic anhydride into acetic acid, which dissolves in the water, and to allow the esters, together with hydrocarbons if present, to rise and float upon the surface as an oily layer. The hot liquid is next poured upon a wet filter, and if it be desired to ascertain the weight of the acetylated product the flask is thoroughly rinsed on to the filter with small quantities of boiling water, until free from acetic acid ; it is then placed in the water-oven to dry. The oily liquid in the filter is thoroughly washed with boiling water until the washings are perfectly neutral, and the filter is then placed in a dry funnel over the flask in the water-oven until the acids have run through. The oil absorbed by the filter paper is (after cooling) rinsed into the flask with ether (or with boiling chloroform if myricyl alcohol is present), the solvent is evaporated off, and the residue is weighed constant. The saponification value is then determined in the usual way on 2·5 grms., or the whole quantity may be used if not exceeding 2·5 to 3 grms. in weight.[1]

Table CVIII. contains the results obtained by treating in this way the unsaponifiable matter (mixed alcohols) from sperm oil, wool fat, beeswax, and carnauba wax ; also the results theoretically yielded by some alcohols known to occur in fats and waxes.

The alcohols of sperm oil are unknown ; according to Lewkowitsch they belong for the most part, if not wholly, to the ethylene series. The alcohols

---

[1] In a private communication from Messrs. Totton & Hawthorne, Belfast, it is suggested that the oily acetates can be more conveniently washed in a Cassal's butter flask—a separator flask made to stand boiling water—and then run back into the tared flask, the separator being rinsed into the flask with ether to remove adhering oil, the ether evaporated off and the acetates then dried in the flask on the water-oven. Traces of water mixed with the acetates are got rid off by adding 1 or 2 c.c.'s of alcohol and heating on the oven, a gentle current of air being allowed to flow through the flask.

of wool fat are also partly unknown, but cholesterol and isocholesterol occur in them to a large extent, and ceryl alcohol also is present.[1] Myricyl alcohol is the chief part of the unsaponifiable matters from carnauba wax and beeswax; in the latter, hydrocarbons occur to the extent of 15–17 per cent, which accounts for the low saponification value of the acetylated product. Cetyl palmitate is the chief constituent of spermaceti, in which octadecyl alcohol also occurs.

TABLE CVIII.—RESULTS OF THE ACETYLATION OF ALCOHOLS.

Alcohol.	Formula.	Formula of Acetate.	Yield of Acetate per 100 pts. of Alcohol (Theory).	Saponification Value of Acetate, per cent. (Theory).
Cetyl,	$C_{16}H_{33}OH$	$C_{16}H_{33}O.C_2H_3O$	117·35	19·76
Octodecyl,	$C_{18}H_{37}OH$	$C_{18}H_{37}O.C_2H_3O$	115·55	17·99
Ceryl,	$C_{27}H_{55}OH$	$C_{27}H_{55}O.C_2H_3O$	110·61	12·81
Myricyl,	$C_{30}H_{61}OH$	$C_{30}H_{61}O.C_2H_3O$	109·59	11·69
Cholesterol, Phytosterol,	$C_{26}H_{43}OH$	$C_{26}H_{43}O.C_2H_3O$	111·29	13·56

Unsaponifiable Matter (Mixed Alcohols, etc.), from	Yield of Mixed Acetates per cent. (Experiment).	Saponification Value of Mixed Acetates per cent. (Experiment).
Sperm oil,	115·71	18·55
Wool fat (crude),	112·21	16·06
,, (neutral, 'wool wax'),*	113·6	15·63
,, ,, †	108·3	15·32
Wool wax prepared from lanolin,	..	14·38
Beeswax,	106·46	9·84
,, (another sample),	107·62	10·25
Carnauba wax,	110·17	12·14
Cholesterol (pure),‡	..	13·49

* Lewkowitsch, *Jour. Soc. Chem. Ind.*, xi. (1892), p. 138.
† *Ibid.*, xv. (1896), p. 14. ‡ *Ibid.*, xi. (1892), p. 143.

Analysis of Mixtures containing Sperm Oil or Wool Fat and Mineral Oil.—(*a*) When a mixture containing sperm oil or wool fat and mineral oil is saponified, the unsaponifiable matter extracted from the soap solution by ether contains the whole of the mineral oil together with the mixed alcohols of the wax, and in order to determine the percentage of mineral oil directly, the alcohols must be separated. It has been proposed by Horn[2] and Lobry de Bruyn[3] to effect this separation by means of acetic anhydride, which dissolves the wax alcohols freely whilst having very little solvent action on the mineral oils; but Dunlop[4] found that although the acetic anhydride alone at 16°–20° C. dissolved only from 0·5 to 1 per cent. of "·885" mineral oil, in a solution of the wax alcohols from sperm oil in acetic anhydride the solubility of the mineral oil was so much increased that not less than about 9·5 per cent. could be detected in sperm oil by this test. Alcohol fails for the same reason, if too strong or used in too small volume, but Nash[5] has shown that if the sperm alcohols be dissolved in not less than 25 times their volume of rectified alcohol (0·8345 sp. gr.), practically the whole of the mineral oil (American 0·905) remained insoluble at 70° F. A rough quantitative separation by means of rectified

---

[1] For an account and discussion of the latest researches into the nature of wool fat and wax, see Lewkowitsch, *Chem. Tech. of Oils, Fats, and Waxes*, ii. (1922), pp. 903–906.

[2] *Zeits. angew. Chem.*, 1888, p. 458; abs. in *Jour. Soc. Chem. Ind.*, vii. (1888), p. 696.

[3] *Chem. Zeit.* **17**, p. 1453; abs. in *Jour. Soc. Chem. Ind.*, xiii. (1894), p. 426.

[4] *Jour. Soc. Chem. Ind.*, xxvii. (1908), p. 63.

[5] *Analyst*, xxix. (1904), p. 3.

alcohol would, therefore, appear to be possible, provided the same holds true for other mineral oils.

(*b*) The percentage of sperm oil in a mixture containing nothing else except mineral oil could easily be calculated, with approximate accuracy, from the saponification value of the mixture; but when a second, perhaps unknown, fatty oil is present, this method is not available. Assuming that the third constituent of the mixture is not another wax such as wool fat, or a liver oil containing much cholesterol, the problem can be solved by determining the percentage of total unsaponifiable matter, acetylating it, and determining the saponification value of the acetylated product. Taking the numbers for sperm oil given in the table on p. 321,[1] and 38 as the percentage of mixed alcohols formed by the saponification, the percentages of mineral oil and sperm oil in the mixture can be calculated as follows:—

Let x = the percentage of total unsaponifiable matter yielded by the sample.

„ y = the percentage of KOH required for the saponification of the acetylated product.

Then, $\frac{100xy}{(18\cdot55\times115\cdot71)-15\cdot71y}$ = the percentage of mixed alcohols (a) yielded by the sample.

$x-a$ = the percentage of mineral oil.

$\frac{100a}{38}$ = the percentage of sperm oil.

To test the method, two mixtures of sperm oil and "·885" pale mineral oil were prepared and analysed with the following results:—

1. *Mixture containing 2 parts sperm oil and 1 part mineral oil.*

	Per cent.
Weight taken; 5 grms.	
Unsaponifiable matter obtained, 2·9706 grms. =	59·41
Saponification value of the acetylated product, } 9·05 per cent.	
$\frac{59\cdot41\times9\cdot05\times100}{(18\cdot55\times115\cdot71)-(15\cdot71\times9\cdot05)}$ =	26·33
Mineral oil found	33·08
„ taken	33·33

2. *Mixture containing 2 parts mineral oil and 1 part sperm oil.*

	Per cent.
Weight taken; 5 grms.	
Unsaponifiable matter obtained, 3·9892 grms. =	79·78
Saponification value of the acetylated product } 3·47 per cent.	
$\frac{79\cdot78\times3\cdot47\times100}{(18\cdot55\times115\cdot71)-(15\cdot71\times3\cdot47)}$ =	13·23
Mineral oil found	66·55
„ taken	66·66

Buisine's process for the estimation of hydrocarbons in beeswax, which con-

---

[1] It should be understood that these numbers are based on the analysis of one sample, and do not necessarily apply to all sperm oils.

sists of heating the wax with potash-lime to 250° C., whereby the wax alcohols are converted into fatty acids and soaps, from which the unchanged hydrocarbons can be extracted by means of ether,[1] would be applicable to a mixture of sperm oil and mineral oil, but not to a mixture containing wool fat or cholesterol, since the latter remains practically unchanged (see Lewkowitsch, *Jour. Soc. Chem. Ind.*, 1896, p. 14).

11. Acetylation of Hydroxylated Fatty Acids and Glycerides.

Determination of the Acetyl Value.—The action of acetic anhydride on hydroxylated fatty acids is similar to its action upon alcohols, the hydrogen of the alcoholic hydroxyl group or groups being replaced by acetyl. Thus:

$$C_{17}H_{32}(OH)COOH + (C_2H_3O)_2O = C_{17}H_{32}(O.C_2H_3O)COOH + C_2H_4O_2$$

Ricinoleic acid — Acetic anhydride — Acetyl-ricinoleic acid — Acetic acid

Benedikt and Ulzer, believing that those fatty acids which contain no alcoholic hydroxyl, such as stearic, oleic, and all the more commonly occurring fatty acids, are unacted on by acetic anhydride, proposed the following method for the valuation of castor oil:—

Benedikt's Method.—About 20 grms. of the insoluble fatty acids, prepared as directed on p. 315, are boiled with an equal volume of acetic anhydride for two hours in a flask connected to a reflux condenser. The contents of the flask are poured into a glass beaker of 1 litre capacity and diluted with about 500 c.c. of boiling water; the beaker is then placed on a thin disc of asbestos millboard, and the liquid is boiled briskly for half an hour with a cover on the beaker. To prevent explosive ebullition, a slow current of carbon dioxide is conducted through the liquid by means of a piece of thermometer tube reaching nearly to the bottom of the beaker. The oil and water are allowed to separate, the aqueous liquid is siphoned off, and the oily layer is again boiled with water After boiling in this way with three successive quantities of water, the oil is poured on to a wet filter and washed with boiling water until the washings are neutral. The filter containing the acetylated acids is then removed to a dry funnel, which is placed in the water-oven over a dry beaker and left until the acids have run through.

2·5 grms. of the dry acetylated acids thus prepared are weighed into a small flask, dissolved in about 10 c.c. of neutralised rectified alcohol, mixed with a few drops of phenolphthalein solution, and very carefully titrated with seminormal alcoholic potash added from a burette until the liquid is coloured faintly pink. The exact volume of potash solution used having been read off and recorded, about twice as much more is run into the flask from the burette, and the flask is then corked and boiled under an inverted condenser for one hour[2]; the excess of potash is then determined by titration with seminormal hydrochloric acid, exactly as in determining the saponification value. The potash solution is standardised with the same acid.

On the first neutralisation with potash in the cold, the following reaction takes place:—

$$C_{17}H_{32}(O.C_2H_3O)COOH + KOH = C_{17}H_{32}(O.C_2H_3O)COOK + H_2O.$$

Acetyl-ricinoleic acid — Potassium acetyl-ricinoleate

The percentage of potash required for this reaction was called by Benedikt the *acetyl acid value.*

---

[1] See Lewkowitsch, *Chem. Technology, etc.*, 3rd edition, p. 380.

[2] A large excess of potash and long heating are necessary for the complete saponification of the acetylated acids.

By adding more potash and heating, saponification occurs, thus:—

$$C_{17}H_{32}(O.C_2H_3O)COOK + KOH = C_{17}H_{32}(OH)COOK + KC_2H_3O_2$$

Potassium acetyl-ricinoleate Potassium ricinoleate Potassium acetate

the percentage of potash required for this reaction is called the *acetyl value.*

EXAMPLE.

2·5 grms. of the acetylated fatty acids from a sample of castor oil required 13·22 c.c. N/2 KOH for neutralisation. 13·22×0·02807=0·3711 grm. KOH required for 2·5 grms.=14·84 grms. KOH for 100 grms.; therefore, the *acetyl acid value* was 14·84.

26·22 c.c. more N/2 KOH were added, and after boiling for one hour 13·41 c.c. of N/2 HCl were required for neutralisation. Therefore, the acetic acid formed on saponification required 26·22−13·41=12·81 c.c. N/2 KOH for neutralisation,=12·81×0·02807=0·3598 grm. KOH for 2·5 grms.=14·39 grms. KOH for 100 grms.; therefore, the *acetyl value* was 14·39.

The results in the following table were obtained by Benedikt and Ulzer:—

TABLE CIX.—ACETYL VALUES OF OILS (*Benedikt*).

Description of Oil.	Mixed Fatty Acids.	Acetylated Acids.	
	Acid Value (KOH required for neutralization), per cent.	Acetyl Acid Value, per cent.	Acetyl Value, per cent.
Arachis (earthnut), .	19·88	19·33	0·34
Olive, ...	19·71	19·73	0·47
Rape, . . .	18·25	17·85	0·63
Peach-kernel, . . .	20·25	19·60	0·64
Hempseed, . . .	19 94	19·68	0·75
Walnut, ...	20·48	19·80	0·76
Croton, ...	20·10	19·57	0·85
Linseed, ...	20·13	19·66	0·85
Sesamé, ...	20·04	19·20	1·15
Poppyseed, . . .	20·06	19·41	1·31
Cottonseed, . . .	19·98	19·57	1·66
Grapeseed (*Horn*), . .	...	...	14·45
Castor, ...	17·74	14·28	15·34
'Blown oil,' . . .	...	18·45	6·22

The following results were obtained by Archbutt:—

Description of Oil.	Acetyl Value of the Insoluble Fatty Acids by Benedikt's Process, per cent.
Castor oil, ...	14·95–15·08
Blown East India rape oil, . .	5·68
Blown ravison oil, . .	5·37
Blown cottonseed oil, . . .	6·96

Thus, castor oil is sharply distinguished from the other natural oils (except grapeseed oil) by its high acetyl value, less sharply from blown oil, though

10 per cent. of the above sample of blown oil (Table CIX.) would lower the acetyl value of castor oil from 15·34 to 14·43 per cent.

Lewkowitsch[1] has shown that Benedikt's method of determining the acetyl values of oils is subject to an important error, and that pure stearic, oleic, and other fatty acids which contain no alcoholic hydroxyl may, nevertheless, give considerable acetyl values when treated by Benedikt's process. This he explains by stating that the fatty *acids* when boiled with a large excess of acetic anhydride are converted more or less completely into *anhydrides*, as shown by the following equation:—

$$\underset{\text{Palmitic acid}}{2C_{15}H_{31}COOH} + \underset{\text{Acetic anhydride}}{(C_2H_3O)_2O} = \underset{\text{Palmitic anhydride}}{(C_{15}H_{31}CO)_2O} + \underset{\text{Acetic acid}}{2CH_3COOH}$$

When the acetylated product is boiled with water, the greater part of the anhydride is reconverted into acid,

$$(C_{15}H_{31}CO)_2O+H_2O=2C_{15}H_{31}COOH,$$

but a variable proportion remains unchanged, and does not combine with potash *in the cold*; thus the acetyl acid value is too low. On *boiling* with potash, however, the anhydride readily undergoes hydrolysis, and, by neutralising potash, causes a fictitious acetyl value to be obtained. On this account, the acetyl values obtained by other observers have not always agreed with Benedikt's numbers.

In order to avoid the error due to the formation of fatty anhydrides, Lewkowitsch first proposed to determine the acetyl value by distilling off and determining in the distillate the acetic acid formed by saponification of the acetylated fatty acids. He has since proposed to acetylate the glycerides themselves, and this has now become the standard method.

Lewkowitsch's Method.—10–20 grms. of the oil or fat, from which free fatty acids, if exceeding 5 per cent. in amount, should be first removed as directed on p. 296 are boiled for two hours under reflux with an equal volume of acetic anhydride and then washed by boiling with three successive half litres of water, for half an hour each time, as in washing the acetylated fatty acids in Benedikt's process (p. 323). The acetylated glycerides are further washed on a wet filter until every trace of acid is removed, and finally dried in the water-oven.

5 grms. of the acetylated oil are saponified by boiling for half an hour, under a reflux condenser, with 70 c.c. of seminormal alcoholic potash. The soap solution is then rinsed with neutral alcohol into a porcelain basin and evaporated over the steam-bath until the alcohol is expelled. The soap is dissolved in boiling water, rinsed into a 12-oz. flask, and decomposed by adding *exactly* the volume (ascertained by a separate experiment) of seminormal hydrochloric acid or sulphuric acid necessary to neutralise the 70 c.c. of standard potash. The flask is closed by a cork carrying a long glass tube. The fatty acids will melt and form a clear oily layer on the surface of the liquid, and the acetic acid, together with any soluble fatty acid present, will dissolve in the aqueous liquid. (In order to facilitate the separation of the fatty acids, a little mineral acid may be added, which must be carefully measured and allowed for in the subsequent titration.) When cold, the aqueous liquid is poured through a wet filter and the fatty acids are thoroughly washed with hot well-boiled distilled water free from CO_2 until the soluble acid is removed. This part of the process resembles the determination of the Hehner value (p. 314). The filtrate, which must be perfectly bright, is then

---

[1] *Proc. Chem. Soc.* (1890), pp. 72, 91; *Jour. Soc. Chem. Ind.*, ix, (1890), p. 660

titrated with decinormal alkali, using phenolphthalein as indicator, and, from the result, the number of grms. of potash required to neutralise the acetic acid formed on saponifying 100 grms. of the acetylated oil is calculated.

TABLE CX.—TRUE ACETYL VALUES OF OILS (*Lewkowitsch*).

Class.	Description of Acetylated Oil	True Acetyl Value. Per cent.
Vegetable Non-drying Oils and Fats.	Arachis (earthnut) oil,	0·91
	Castor oil,	14·61-15·09
	Coconut oil,	0·09- 1·23
	Japan wax,	1·73- 2·66
	Olive oil,	1·06
	Palm oil,	1·60
	Palm nut oil,	0·19- 0·84
Vegetable Semi-drying Oils.	Cottonseed oil,	0·76- 1·80
	Curcas oil,	0·84- 0·98
	Maize oil,	0·58
	Rape oil,	1·47
Vegetable Drying Oils.	Candlenut oil,	0·99
	Linseed oil,	0·40
Animal Oils and Fats.	Animal oil,	1·85
	Bone fat,	1·13
	Horsefoot oil,	0·94
	Lard,	0·27
	Lard oil,	0·26
	Neatsfoot oil,	0·22
	Tallow,	0·24- 0·86
Marine Animal Oils and Fluid Waxes.	Cod-liver oil,	0 11
	Fish oil (containing coast cod oil, etc.),	3·27
	Japan fish oil,	1·16
	Seal oil,	1·52
	Shark-liver oil,	0 90
	Skate-liver oil,	1·01
	Sperm oils (Southern and Arctic),	0·41 - 0·64
Waxes (solid).	Beeswax,	1·52
	Carnauba wax,	5·52
	Spermaceti,	0·26
	Wool wax,	2·33
Blown Oils.	Blown cottonseed oil (·979),	6·42
	Blown East India rape oil (·962),	4·66
	Blown ravison oil (·968),	5·25

Acetyl values determined by the foregoing method include the potash required to neutralise the soluble fatty acids present in the oil or fat; the true acetyl values are obtained by deducting this. Lewkowitsch has published a number of determinations, from which those in Table CX. are selected.

Lewkowitsch, who has made a very complete investigation into the meaning of the acetyl value (*Analyst*, 1899, p. 319), has shown that it must not be looked upon as a constant, except in the case of castor oil, since it measures, besides hydroxylated acids, the following substances which may occur in variable proportions in oils and fats, viz.: free alcohols (including cholesterol and phytosterol), oxidised and unknown fatty acids occurring in blown oils, also mono- and diglycerides resulting from natural hydrolysis of triglycerides in oils and fats which have been kept. Oils and fats which have become rancid by keeping possess higher acetyl values than when in the fresh condition. These considerations show the necessity of taking precautions to prevent oxidation of oils or fatty acids obtained from them, previous to the determination of the acetyl value.

L.—THE IODINE VALUE.

I. Meaning and Use of this Value.

The iodine or Hübl value of a substance is the percentage of iodine absorbed from solution under definite conditions prescribed by Hübl in 1884.[1] The value of the test depends upon the fact that the fatty oils, fats, and allied bodies are mixtures, in very variable proportions, of glycerides of saturated and unsaturated fatty acids, and that whilst the latter readily unite with the halogens and form addition products, the former do not. By bringing the oil and the halogen together in solution under conditions which reduce substitution to a minimum, it is found that the amount of halogen absorbed by each kind of fat and oil is very characteristic, and affords one of the most reliable means we possess of distinguishing one kind of oil from another and of determining their proportion in mixtures. The test is most generally useful in the analysis of fatty oils and fats. It was at one time believed to have a limited value in the identification of mineral lubricating oil, but this has been disproved by Dunstan and Thole (see p. 331). The halogen at first used was bromine. Allen published details of a bromine process in 1881,[2] and an improved process was described by Mills in 1883 and 1884;[3] but Hübl's iodine process has gradually superseded these. It has been the subject of numerous modifications, but the only one of permanent value is that due to Wijs,[4] which has greatly simplified and improved the Hübl process. We shall describe both processes, but the latter (Wijs's) is the one which recommends itself for use.

II. Determination of the Iodine Value.

(*a*) **Hübl's Process.**—The following solutions are required:—

Iodine Solution.—This is a solution, in ethyl alcohol, of iodine and mercuric chloride, in the proportion of at least one molecule of mercuric chloride to every molecule of iodine. The presence of mercuric chloride renders the absorption of the halogen by the fat more rapid and complete, and is essential for the attainment of constant results.[5]

In preparing the solution according to Hübl's directions, 1 litre of pure 95 per cent. alcohol is divided into two equal parts; in one, 25 grms. of iodine are dissolved (heating hastens solution), and in the other, 30 grms. of powdered

---

[1] *Jour. Soc. Chem. Ind.*, iii. (1884), p. 641.
[2] *Analyst*, vi. (1881), pp. 177 and 215.
[3] *Jour. Soc. Chem. Ind.*, ii. (1883), p. 435; iii. (1884), p. 366.
[4] *Berichte*, 1898, p. 750.
[5] According to Wijs (*Jour. Soc. Chem. Ind.*, 1898, p. 698), iodine monochloride is first formed, as shown by Ephraim, $HgCl_2+4I=HgI_2+2ICl$, but this reacts with the water of the alcohol to form hypoiodous acid, which is the active agent, thus: $ICl+H_2O=HCl+HIO$. Lewkowitsch prefers to assume that ICl is added on directly.

mercuric chloride (easily soluble in the cold); the two solutions are then mixed. *The solution must be kept in a well-stoppered bottle in a dark, cool cupboard. At first the strength is about one-fifth normal, but the free iodine gradually and continually diminishes, at first rapidly and afterwards more slowly.*[1] The solution, when freshly prepared, should be allowed to stand for from six to twelve hours before use. Every time it is used it must be standardised. Owing to the continual diminution of strength, a solution many weeks old can no longer be relied upon to give the maximum iodine absorption with substances of high iodine value, and, as the action of the iodine on the alcohol is much less rapid in the absence of mercuric chloride, it is far better to keep the solutions of iodine and mercuric chloride in separate bottles and to mix them only the necessary few hours before being required for use.

Decinormal Thiosulphate Solution.—This may be prepared by dissolving 12·4125 grms. of pure dry sodium thiosulphate crystals ($Na_2S_2O_3.5H_2O$) in water and diluting to 500 c.c. at 60° F. The recrystallised salt, as purchased, is almost chemically pure, but generally damp; the crystals merely require crushing, drying by moderate pressure between folds of blotting-paper, and preserving in a well-stoppered bottle. If the above stated quantity of the dried salt be made up to exactly 500 c.c., the solution will be so nearly correct that for ordinary work it is not necessary to standardise it; and if kept in the dark, it alters in strength very slowly. But it is easier and more satisfactory to prepare an approximately decinormal solution, by dissolving 12·5 grms. of the undried crystals, and to standardise this by means of pure potassium bichromate.

The pure bichromate is prepared by recrystallising the commercial salt a few times, and is obtained in the form of fine granular crystals by stirring and rapidly cooling a hot saturated solution. The crystals are filtered by suction, dried in the air-oven at 150°–200° C., and kept in a stoppered bottle.

For standardising the thiosulphate, an accurate 1 per cent. solution of the bichromate is prepared, and is kept in a well-stoppered bottle. 10 c.c. of this solution are measured into an 8-oz. stoppered bottle and diluted with about 4 oz. of cold distilled water. 20 c.c. of a 10 per cent. solution of pure potassium iodide (free from iodate) are added, and about 10 c.c. of dilute sulphuric acid (1 vol. of strong acid to 3 vols. of water). This acid liberates exactly 0·2584 grm. iodine, equivalent to about 20·4 c.c. of decinormal thiosulphate. The thiosulphate solution is then added from a burette, *in drops*,[2] with continual agitation of the liquid, until the colour of the free iodine has nearly disappeared. Starch solution is then added, and the titration is finished very slowly, by adding the thiosulphate at first two drops and then one drop at a time and allowing plenty of time between each addition, as the final destruction of the blue iodide of starch takes place slowly and it is easy to overshoot the mark. The colour of the solution is not bleached, but changes to the pale bluish-green of chromium chloride. If x be the number of c.c. used, then 1 c.c. of thiosulphate solution is equivalent to $\frac{0{\cdot}2584}{x}$ grm. of iodine.

An alternative, and in some respects preferable, method of standardising the decinormal thiosulphate solution is by means of decinormal permanganate solution. 100 c.c. of distilled water, 10 c.c. of dilute sulphuric acid (1 vol. of acid to 3 vols. of water), and 20 c.c. of a 10 per cent. solution of

---

[1] Owing to the fact that the hypoiodous acid gradually oxidises the alcohol to aldehyde, thus:—$C_2H_6O+2HIO=C_2H_4O+2H_2O+I_2$. In the reaction, 2HIO (two molecules) liberate I_2, whereas one molecule of undecomposed HIO liberates I_2 in the titration, thus: $HCl+HIO+KI=KCl+H_2O+I_2$.

[2] If the thiosulphate be added more rapidly, an excessive quantity is required.

pure potassium iodide, are well mixed in a stoppered bottle. 20 c.c. of decinormal permanganate solution are then added and the liberated iodine titrated with the thiosulphate solution. 20 c.c. of decinormal permanganate solution of correct strength liberate 0·2539 grm. of iodine.

TABLE CXI.—IODINE VALUES OF FATTY OILS, FATS, AND WAXES, AND THEIR MIXED FATTY ACIDS.

Class.	Name of Oil, etc.	*Iodine Values.* Iodine absorbed by 100 parts Of Oil, Fat, etc.	*Iodine Values.* Iodine absorbed by 100 parts Of Mixed Fatty Acids.
Vegetable Non-drying Oils and Fats.	Arachis (earthnut) oil,	83·3-105	95·5-103·4
	Ben oil,	72 -113	..
	Castor oil,	81·4- 90·6	86·5- 88·5
	Coconut oil,	8 - 10	8·4- 9·3
	Coconut 'oleine,'	13·4	..
	Hazel nut oil,	83 - 90	90·1- 90·6
	Japan wax,	4·2- 15·1	..
	Olive kernel oil,	87 - 88	..
	Olive oil,	76·2- 94·7 (usually 82-86)	86·1- 90·2
	Palm oil,	50·2- 57·5	53·3
	Palm nut oil,	10·3- 17·5	12 - 12·1
Vegetable Semi-drying Oils.	Beech nut oil,	111·2-120·1	114
	Brazil nut oil,	90·6-106·2	108
	Cameline oil,	135·3-142·4	137
	Cottonseed oil,	100·9-116·9	111 -115·7
	Cottonseed 'stearine,'	88·7-104	94·3
	Curcas oil,	98 -101	105
	Maize oil,	111·2-130·8	113 -125
	Mustard oil (black),	96 -122·3	109·5-126·5
	,, ,, (white),	92·1-103	94·7-106·2
	Mustard husk oil,	117	..
	Rape oil,	97 -105	96·3-105·6
	Ravison oil,	109 -122	126
	Sesamé oil,	102·5-115	109 -112
	Soja bean oil,	136 -139	..
Vegetable Drying Oils	Candle nut oil,	152·8-163·7	157·5
	Hempseed oil,	140·5-157·5	122 -141
	Linseed oil,	160 -201·8	178·5-209·8
	Nigerseed oil,	126·6-133·8	147·5
	Poppyseed oil,	132·6-157·5	139
	Sunflower oil,	120·2-135	124 -134
	Tung oil,	148·6-165·7	144·1-159·4
	Walnut oil	132·1-151·7	15[illegible]
Animal Oils and Fats.	Bone fat,	46·3- 55·8	55·7- 57·4
	Horse fat,	71·4- 86·3*	83·9- 87·1
	Horse oil (drying oil expressed from horse fat),	90 -115	..
	Horsefoot oil,	73·7- 90·3	..
	Lard,	49·9- 76·4	64
	Lard oil,	67 - 82	..
	Neatsfoot oil,	66 - 77	62 - 77
	Tallow (beef),	35·4- 47·8	25·9- 41·3
	,, (mutton),	32·7- 46·2	34·8
	Tallow oil ('animal oil'),	55·5- 60	55 - 57
Marine Animal Oils and Fluid Waxes.	Cod-liver oil,	154 -170	164 -171
	Dolphin body oil,	99·5-126·9	..
	Dolphin jaw oil, strained from solid fat,	32·8	..
	Fish liver oils other than cod-liver,	102·7-191·1	..
	Menhaden oil,	139·2-172·6	..
	Porpoise body oil,	88·3-119·4	126
	Porpoise jaw oil, strained from solid fat,	21·5- 49·6	..
	Porpoise jaw oil, unstrained,	76·8	..
	Sardine oil (Japanese),	180·6-187·3	..
	Seal oil,	129·5-162·6	..
	Sperm oil (including Arctic),	80·0- 85·0	82·2- 88·1
	Whale oil,	110 -136	130·3-132
Waxes (solid).	Beeswax,	7·9- 12·1	..
	Carnauba wax,	13·2- 13·5	..
	Spermaceti (if free from sperm oil),	nil.	..
	Wool fat,	25 - 41	9 - 17

* Horse kidney fat, 110·65 (Dunlop).

Potassium Iodide Solution.—This is a 10 per cent. aqueous solution of the pure salt free from iodate. It becomes slightly yellow on keeping, owing to liberation of iodine, but may be bleached by adding a drop or two of thiosulphate.

Starch Solution.—About 1 grm. of pure arrowroot starch is rubbed to a smooth cream with a few drops of water and poured into an 8-oz. conical beaker. The beaker is nearly filled with boiling water, immediately placed over the naked flame of an Argand-Bunsen for a few moments, and allowed to boil up. It is then covered and left to stand overnight, and the clear liquid is decanted for use. If required for use immediately, the hot liquid may be filtered.

Methylated Chloroform.—This must be proved to absorb no iodine. Place 10 c.c. and 20 c.c. in two stoppered bottles. Add to each 10 c.c. of iodine solution, and stopper the bottles tightly, after moistening each stopper with a drop of potassium iodide solution. Place the bottles in a dark cupboard for several hours, and then titrate the free iodine in each; if the volume of thiosulphate used is the same for both, the chloroform is fit for use.

To determine the iodine value, as much of the substance is weighed in a very small counterpoised beaker as will absorb about 0·3 grm. of iodine, or a trifle more. It is dissolved in chloroform[1] and rinsed into a dry 8-oz. stoppered bottle, about 10 c.c. of chloroform being used altogether. About the same volume of chloroform is then poured into another similar bottle. Both bottles must have very well-fitted stoppers.

The approximate strength of the iodine solution having been ascertained by titrating 10 c.c. with the standard thiosulphate, as much is measured into each bottle as will contain at least 0·6 grm. of iodine. If, after mixing, the contents of the bottle containing the substance be not clear, more chloroform is added, the same extra volume being added to the blank quantity. The bottles are then tightly stoppered, each stopper being first moistened with a drop of strong potassium iodide solution to make a more effective seal, and are placed in a cool, dark cupboard for not less than six, and not more than about eighteen hours. It is convenient to commence the experiment late in the afternoon and titrate the first thing next morning.

Before commencing to titrate, each bottle, in warm weather, is first cooled by running some cold water over it, so as to produce a slight reduction of pressure inside, and a few drops of potassium iodide solution are poured round the stopper, which, on opening the bottle, are drawn in, rinsing the neck and stopper. 20 c.c. of potassium iodide solution are then poured into the bottle, and cold distilled water is added until the bottle is about two-thirds full. Part of the iodine will now be in the aqueous liquid, and part in the chloroform solution which settles to the bottom. The standard thiosulphate solution is next run in, at first rapidly and afterwards more slowly, with constant agitation, until the free iodine has nearly all disappeared, and then the starch solution is added and the titration is finished drop by drop, vigorously shaking the closed bottle between each drop, until the blue colour is destroyed. The difference between the volume of thiosulphate solution used for the blank quantity and for the sample is calculated to iodine, and, when divided by the weight of substances taken and multiplied by 100, gives the iodine value.

EXAMPLE.

It was required to determine the iodine value of a sample of olive oil.

---

[1] In testing a substance which is insoluble in chloroform but soluble in alcohol, either the substance is transferred to the bottle in a dry state, or it is dissolved in 10 c.c. of absolute alcohol and exactly the same volume of absolute alcohol is added to the blank quantity.

10 c.c. of iodine solution, rather old, required 17·2 c.c. of decinormal thiosulphate solution, equivalent to 0·217 grm. iodine; therefore, a 30 c.c. pipetteful would contain about 0·65 grm. iodine. Now olive oil, when genuine, absorbs about 80 per cent. of iodine; therefore, weighed out 0·4 grm. In titrating, the volumes of thiosulphate solution used were,

For the blank quantity, ...	50·80 c.c.
For the test quantity, ...	24·30 c.c.
Difference, ...	26·50 c.c.

1 c.c. of the thiosulphate used was equivalent to 0·01261 grm. iodine; therefore, 26·50 c.c. were equivalent to 0·33416 grm. Therefore, 0·4 grm. of the oil absorbed 0·33416 grm. iodine, and 100 grms. would absorb $0·33416 \div 0·4 \times 100 = 83·54$, which is the iodine value of the sample.

For the attainment of uniformly reliable and concordant results by this process, about double as much iodine should be added as the substance can absorb. The iodine solution must not be too weak, otherwise the maximum iodine absorption is not obtained with oils of high iodine value. The digestion with iodine must not be continued for too short a time, or unduly prolonged; standing overnight (about eighteen hours) is sufficient in all cases. Although these precautions are more necessary when dealing with substances of high than of low iodine value, it is desirable to adopt the same method of working in all cases.

TABLE CXII.—IODINE VALUES OF MISCELLANEOUS SUBSTANCES.

Class.	Description.	Iodine Value = Iodine absorbed by 100 parts.
Blown Oils.	Blown rape and ravison oils,	47 –73
	Blown cottonseed oil, .	56 –66
Alcohols.	Alcohols from sperm oil, . . .	59·5–69·3
	Alcohols from wool fat, . . .	35 –40
	Cholesterol and Phytosterol, .	67·3–68·1
Resins.	Colophony, ...	160 –219 *
Solid Hydrocarbons.	Paraffin wax, ...	3·9– 4·0
	Ozokerite, ...	4·5– 4·9
	Vaseline (Chesebrough Co.), .	8·6

* Wijs's solution, two hours' contact (see Lewkowitsch, *Oils, Fats, etc.*, i. (1922), p. 633).

Dunstan and Thole [1] have shown that the reaction of mineral oils towards iodine differs profoundly from that of fatty oils. By varying the time and proportion of reagent, a given mineral lubricating oil may yield very widely varying values. A Californian mineral oil, for example, gave a value of twenty in 2 hours, forty in 4 hours, sixty in 64 hours, and eighty in 266 hours, whilst rape oil gave a steady value in three minutes. Increasing the proportion of reagent to oil was found invariably to augment the iodine value of a mineral oil, whilst in the case of rape oil the proportion made no difference, provided a sufficient excess was used.

The chemical reactions taking place in this process have been fully dis-

---

[1] *Jour. Inst. Petro. Tech.*, 7 (1921), p. 420.

cussed in papers by Schweitzer and Lungwitz,[1] Ephraim,[2] Waller,[3] Wijs,[4] Lewkowitsch,[5] and others;[6] for practical purposes it may be assumed that ICl is added on to the unsaturated carbon atoms.

(*b*) **Wijs's Process.**—Wijs has replaced Hübl's reagent by a solution of iodine monochloride in acetic acid.

The reagent is prepared by dissolving 13 grms. of iodine in 1 litre of pure glacial acetic acid, determining the titer of the solution, and then passing into it a current of chlorine (free from hydrochloric acid) until the titer is nearly but not more than doubled. With a little practice the point can be judged with fair accuracy by observing the change in colour from very dark brown to a rich orange. The acetic acid used must be proved to have no reducing action on permanganate. The solution thus obtained has the following advantages over the Hübl solution : it is comparatively stable, and will keep for six months without serious loss of strength; the time of contact necessary for complete iodine adsorption to take place is shortened to an hour or less (in the case of non-drying oils, a few minutes suffice).

To determine the iodine value with this solution, as much of the substance as will absorb about 0·325 grm. of iodine is dissolved in 10 c.c. of chloroform in a stoppered 8-oz. bottle, mixed with 25 c.c. of the Wijs solution (containing about 0·65 grm. of iodine) and allowed to stand fifteen minutes for non-drying oils (olive), thirty minutes for semi-drying oils (rape), sixty minutes for drying oils (linseed). 20 c.c. of potassium iodide solution are then added, followed by about 100 c.c. of distilled water, and the titration is proceeded with in the manner described on p. 330. There is no need to make a blank test, occasional titration of the Wijs solution being sufficient. Iodine values determined by this method agree closely enough for practical purposes with those determined by the Hübl method, when the latter is properly carried out, and as the method is much simpler it will naturally be preferred.[7]

M.—HEHNER'S BROMINE THERMAL TEST.

Hehner and Mitchell have devised a very useful thermal method for the examination of oils. Hehner showed[8] that when liquid bromine is added to an oil or fat dissolved in chloroform or carbon tetrachloride, instantaneous combination occurs, accompanied by considerable evolution of heat, and in conjunction with Mitchell he subsequently discovered that the heat evolved, measured by the rise of temperature under fixed conditions, bears a nearly constant ratio to the iodine value; that, in fact, the iodine value, which by Hübl's process takes several hours to determine and involves the use of a special reagent not always ready, can be ascertained with considerable accuracy in a few minutes by measuring the thermometric rise with bromine and multiplying the result by a factor.

Since iodine values can now be determined so rapidly by the Wijs process, the bromine thermal test has to a large extent lost its usefulness; but it may still be employed with advantage as a sorting test, where a large number of samples have to be examined in a short time.

---

[1] *Jour. Soc. Chem. Ind.*, xiv. (1895), pp. 130 and 1030.

[2] *Analyst*, xx. (1895), p. 176.

[3] *Ibid.*, p. 280.

[4] *Jour. Soc. Chem. Ind.*, 1898, p. 698.

[5] *Analyst*, 1899, p. 257.

[6] For a full discussion of the subject see Lewkowitsch, *Chem. Tech.*, i. (1921), pp. 407–414.

[7] See a paper by Wijs in the *Analyst*, xxv. (1900), p. 31.

[8] *Analyst*, xx. (1895), p. 49.

The following apparatus and reagents are required:—

A *vacuum jacketed-tube*,[1] measuring internally 3½ inches in length × ⅞ inch in diameter.

A *Centigrade thermometer*, divided in fifths of a degree from, say, 0° to 50°.

A 1 *c.c. pipette*, having a short soda-lime tube fixed by a cork to the upper end, with a flexible tube for mouthpiece.

Liquid bromine, and

Methylated chloroform.

The Process.—The vacuum-jacketed tube is suspended from one arm of the balance by means of a stiff platinum wire loop (fig. 114), a counterpoise made from a piece of thick sheet lead being placed in the other pan. By opening the side door of the balance case, the oil or fat can be dropped into the tube and the exact weight easily and quickly adjusted. The tube is then slipped out of the wire loop and fixed firmly, by means of the short stem, in a suitable stand, and 10 c.c. of chloroform are measured into it from a pipette. The temperature of the bromine having been ascertained to the nearest 0·1°, by stirring with the thermometer, the same thermometer, freed from adhering bromine, is immersed in the chloroformic solution of the substance, which is brought to exactly the same temperature as the bromine, either by warming the outer tube by the hand or cooling it by immersion in cold water. This adjustment takes place slowly, as the heat can only be transmitted by radiation. Immediately the temperature is correctly adjusted, 1 c.c. of the bromine is withdrawn from the bottle (by means of a pipette, provided at its upper end with a short soda-lime tube and a flexible mouthpiece) and added to the chloroform solution, which is rapidly stirred with the thermometer until the mercury has risen to the highest point and begun to fall again. As this takes place in about fifteen seconds, close observation of the mercury is necessary. The difference between the initial and final temperatures is the rise of temperature.

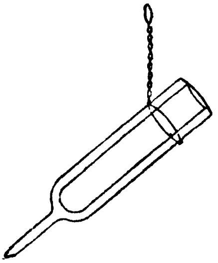

Fig. 114.

It is desirable to vary the quantity of substance taken, according to the amount of heat developed. Of olive and rape oils, 1 grm. is a suitable quantity; of tallow or any other fat composed mainly of saturated glycerides, 2 grms. may be used; but of linseed oil, which reacts very violently with bromine, 0·5 grm. is sufficient. 10 c.c. of chloroform and 1 c.c. of bromine are used in all cases. The rise of temperature when 2 grms. are used is divided by 2, and when 0·5 grm. is used is multiplied by 2. The result, expressed by the symbol β, may be called the *bromine thermal value.*

The numerical value of the factor for converting the bromine thermal values into iodine values depends upon the heat capacity of the particular tube and thermometer used. Hehner and Mitchell found it to be about 5·5, Jenkins[2] 5·7, Archbutt[3] from 5·7 to 6·2, according to the nature of the oil. Each operator, in a test of this kind, must of necessity work out his own factors, by making comparative determinations of the iodine values and the bromine thermal values of about half a dozen genuine samples of each description of oil which he wishes to use the method for.

The results of consecutive experiments made with the same sample of oil are remarkably concordant, the extreme difference usually observed being

---

[1] Obtainable from Messrs. Baird & Tatlock.

[2] *Jour. Soc. Chem. Ind.*, xvi. (1897), p. 193.

[3] *Ibid.*, p. 309.

0·3° C. Duplicate experiments, made at intervals of several days, usually agree within 0·1° C. Bromine as purchased, the same fully saturated with water, and the same dehydrated by shaking with strong sulphuric acid and distilling, gave practically the same results, as the figures in Table CXIII., obtained with the same sample of rape oil, show.

TABLE CXIII.

Experiment.	Thermal Value (β). °C.		
	Bromine as Purchased	Bromine saturated with Water.	Anhydrous Bromine.
1	20·4	20·2	20·1
2	20·3	20·4	20·2
3	20 1	...	...
4	20·2	...	...
Mean,	20·25	20·3	20·15

TABLE CXIV.

Tallow. 7 samples (2 grms. used; the rise of temperature ÷ 2 = β).

Description.	Bromine Thermal Value (β).	$\beta \times 6{\cdot}2$	Hubl Iodine Value
American beef,	6·1	37·8	39·1
Home refined,	6 7	41·5	41·3
,,	6·7	41·5	41·8
,,	7·05	43 7	44 3
,,	7·2	44·6	44 9
Australian mutton,	7·55	46·8	46·3
Home refined,	8 9	55·2	53·5

2. Olive Oil 10 samples (1 grm. used; the rise of temperature = β).

Description.	Bromine Thermal Value (β).	$\beta \times 5{\cdot}7$	Hubl Iodine Value
Unknown,	13 55	77·2	78 7
,,	13 8	78 7	78 9
Malaga,	13 8	78·7	79·3
,,	14·2	80 9	78·4
Unknown,	14·2	80·9	81·4
,,	14·35	81·8	81 4
Gallipoli,	14·4	82·1	82·0
Unknown,	14·45	82·4	84·2
Gallipoli,	14·5	82·6	82·5
,,	14·5	82·6	82·1

3. Rape Oil. 11 samples (1 grm used; the rise of temperature = β).

Description.	Bromine Thermal Value (β)	$\beta \times 5$ 92	Hubl Iodine Value.
Stettin,	17 0	100·6	99 6
Unknown,	17 35	102·7	102·7
,,	17·4	103·0	103 3
,,	17 3	102·4	103 1
,,	17·7	104 8	105 7
,,	17·8	105·4	104·6
,,	17·9	105·9	106 2
,,	18 25	108 0	108 1
,,	18·6	110 1	109·4
Black Sea,	19 1	113·1	113 5
,,	20·3	120·2	121 7

4. Raw Linseed Oil. 10 samples (0 5 grm. used; the rise of temperature × 2 = β)

Description.	Bromine Thermal Value (β).	$\beta \times 6{\cdot}0$.	Hubl Iodine Value.
Old sample,	28 5	171·0	167 1
Unknown,	28·8	172 8	177·0
American (?),	29 6	177·6	177·0
Unknown,	29·7	178·2	177·8
Calcutta,	29 8	178·8	178·7
,,	30·45	182·7	183 3
Baltic,	31·35	188·1	188 5
,,	31·4	188·4	188 8
,,	31·75	190·5	158·8
,,	32·5	195·0	192·5

The results of experiments with four descriptions of oil are given in Table CXIV., and it will be seen that the agreement between the observed and the calculated iodine values is generally very satisfactory. Thus, with the seven samples of tallow, the maximum difference is 1·7 ; in the case of the olive oils, it is 2·5 ; eleven samples of rape oil gave a maximum difference of 1·5 ; and the agreement in the case of raw linseed oil is nearly as good. The greatest difference observed in testing ten samples of the latter oil was 4·2, but if we omit the first two samples the difference does not exceed 2·5. These results prove that the bromine thermal test is a valuable auxiliary method for the valuation of oils, which, in laboratories where a large number of oils of the same kind have to be examined, may save a great deal of time and labour.

N. MAUMENÉ'S THERMAL TEST.

All the fatty oils react with strong sulphuric acid with evolution of heat, which is least in the case of the non-drying and greatest in that of the drying oils. In Maumené's test, 50 grms. of the oil are stirred in a beaker with 10 c.c. of strong sulphuric acid, both at the same initial temperature, and the rise of temperature is read off. This varies from about 40° C. with olive oil to about 130° C. with linseed oil ; and as the limits of variation with different pure samples of each oil are not wide, the test, when conducted with due care, is a valuable means of distinguishing one oil from another and of detecting adulteration.

The attainment of uniform results by this test depends upon the employment of identical conditions, especially as regards the strength of the sulphuric acid used. The following results by Archbutt[1] show the effect of varying the strength of the acid, all other conditions remaining the same.

TABLE CXV.

Description of Oil.	Rise of Temperature (° C.) with Acid containing per cent. of H_2SO_4.						
	97·38	96·71	95·72	94·72	93·75	92·73	91·85
Olive oil, pure, . .	42·7	42	39	36·5	34·5	31	28·6
Olive oil, impure, .	48·5	47·3	44	40·5	38·7	35·5	32·5
Rape oil, pure, . .	62·5	61	58	54	50·3	47	41·7

As the temperature rises more slowly the weaker the acid, it is advisable to use an acid containing not less than 97 per cent. of H_2SO_4 ; and the strength must be ascertained by analysis, since the specific gravity of sulphuric acid reaches the maximum at 97·7 per cent., and then diminishes, so that acids of 95·6 per cent. and 99·2 per cent. strength have the same specific gravity (*Lunge and Naef*). The method of working which we recommend involves the use of the following reagent and apparatus :—

Sulphuric Acid (97% H_2SO_4); prepared as follows: The contents of an unopened Winchester quart bottle of pure sulphuric acid are well mixed; about 6 c.c. are then taken out with a dry pipette, quickly delivered into a dry weighing bottle, which is stoppered and the exact weight taken. The acid is then carefully diluted with cold water, made up to exactly 500 c.c. at the temperature of the laboratory, and well mixed. 100 c.c. of the diluted

---

[1] *Jour. Soc. Chem. Ind.*, v. (1886), p. 303.

acid are next measured with a pipette and delivered into a 16-oz. flask, containing a weighed quantity of pure sodium carbonate dissolved in a small quantity of water. 1·10 grms. of sodium carbonate are taken for every 1 grm. of acid. This weight of the nominally dry carbonate is placed in a tared platinum crucible, gently ignited over a spirit flame for ten minutes, cooled in the desiccator with a cover on the crucible, and the exact weight then taken. After the acid has been run into the sodium carbonate solution, the liquid is heated to boiling to expel most of the carbonic acid, then made quite cold, and the excess of sodium carbonate determined by titration with decinormal acid, using methyl orange as indicator. In order that the end point of the titration may be sharply observed, the colour of the liquid should be compared with that of an equal volume of pure water tinted with the same quantity of methyl orange and contained in an exactly similar flask. The following is an example of the calculation :—

		Grms.
Weight of sulphuric acid titrated $= \frac{1}{5} \times 11{\cdot}1110$	=	2·2222
Weight of dry Na_2CO_3 taken	=	2·4493
N/10 acid, 13·38 c.c. $= Na_2CO_3$ 13·38 × ·0053	=	·0710
Weight of dry Na_2CO_3 neutralised	=	2·3783
Equivalent weight of H_2SO_4	=	2·1980
∴ *Strength of Acid* = 2·1980 ÷ 2·2222 × 100	=	98·98% H_2SO_4

If the acid be weaker than 97 per cent., it is rejected ; if stronger, it is diluted to exactly 97 per cent. strength by adding to a weighed quantity, say 1 kilo., the requisite quantity of pure water, which may be measured from a delicate burette and well stirred into the acid. The reagent thus prepared is preserved for use in a capped ether bottle ; the stock is kept in the " Winchester," the stopper of which, after wiping free from acid, is smeared with a little vaseline and tied down.

Beakers, tall form, 4 inches high by 2¼ inches in diameter. These fit into a nest of cotton-wool contained in a 40-oz. lipped beaker.

A 10-*c.c. burette*, with glass tap. The orifice of the jet is reduced by holding it in the Bunsen flame until, with the tap turned full on, 10 c.c. of the sulphuric acid take one minute, within a second or two, to flow out.

A *Centigrade thermometer*, graduated in single degrees from 0° to 100°.

In making a test, the temperature of the air of the room is first of all ascertained, and the acid is then brought to the same temperature by warming the bottle by the hand or by cooling it in water. Exactly 50 grms. of the oil, having been weighed into the beaker, are stirred with the thermometer and brought to the same temperature as the acid, and the beaker is then placed in the cotton-wool nest. The burette having been filled with the acid and covered with a glass cap, the beaker is brought under it, the tap is opened wide, and 10 c.c. of acid are allowed to run into the oil, all the time stirring the oil and the acid very thoroughly together. After the acid is all in, the stirring is continued until the mercury ceases to rise. The final temperature is read off, the initial temperature is deducted, and the difference is the rise of temperature.

When a number of samples are being tested, a thermometer is kept suspended near the burette to record the temperature of the air, and, if this alters, the initial temperature of the oils must be altered to correspond. Immediately after testing each oil the burette is refilled with acid and capped, and the neck of the bottle is carefully wiped dry and capped. If these directions are followed, very good results may, with practice, be obtained.

This test is most useful in comparing one sample of oil with another, as in controlling the quality of the deliveries of oil purchased to sample. As the results obtained are influenced not only by the strength of the acid used but also by the exact *modus operandi*, each observer must construct a table of results for himself, by testing several pure samples of each oil he requires to examine. Table CXVI. will serve to show, approximately, the results obtained with some well-known oils.

In testing oils which evolve more heat than cottonseed oil, the chemical reaction becomes so violent that the liquid froths out of the beaker; therefore, the test cannot be made unless the oil is diluted. For this purpose olive oil is suitable; *e.g.* 20 grms. of linseed oil diluted with 30 grms. of olive oil give a moderate thermal effect. The olive oil must be tested separately to ascertain the rise of temperature obtained with it alone; the thermal rise of the linseed oil is then calculated as shown by the following example:—

Rise of temperature of the mixture, observed,	77·2°
Effect due to 30 grms. of olive oil $=\frac{3}{5}\times 42^\circ =$	25·2°
Effect due to 20 grms. of linseed oil,	52·0°
∴ 50 grms. of linseed oil would rise $\frac{5}{2}\times 52^\circ =$	130°

TABLE CXVI.

Name of Oil.	Rise of Temperature with 97% Sulphuric Acid. Degrees Centigrade.
Animal (tallow) oil,	35°–42°
Arachis oil,	49°–53°
Cameline oil,	108°
Castor oil,	54°–66°
Cod-liver oil,	124°
Cottonseed oil,	74°–84°
Curcas oil,	65°–67°
Horse oil,	46°–55°
Lard oil,	40°–46°
Linseed oil,	128°–145°
Maize oil,	82°–83°
Menhaden oil,	125°
Mustard husk oil,	67°–75°
Neatsfoot oil,	39°–49°
Nigerseed oil,	100°
Olive oil,	40°–45°
Poppyseed oil,	87°–89°
Rape oil,	58°–63°
Ravison oil,	66°–76°
Seal oil,	100°–105°
Sesamé oil,	63°–65°
Sperm oil,	45°–47°
Tung oil,	124°

Specific Temperature Reaction.—Thomson and Ballantyne[1] have proposed to avoid the trouble involved in the preparation of an acid of known strength by a special method of recording results. Instead of stating the rise of temperature in degrees, they express the result in terms of the rise of temperature with water at 20° C., taken as 100.

Exactly 50 c.c. (=50 grms.) of water are delivered into the beaker from a pipette, brought to 20° C., and mixed with 10 c.c. of sulphuric acid also at 20° C. The acid is run into the water exactly in the same way and at the same rate as into an oil, but the experiment is not so easy, as in stirring the water and acid together in the absence of a lubricant one is very apt to crack the

---

[1] *Jour. Soc. Chem. Ind.*, x. (1891), p. 233.

beaker, and the temperature with water does not remain for some time stationary at the maximum, as with oil, but quickly begins to fall. Having, however, successfully made the experiment, preferably in duplicate, the oil is tested in the same way and in the same beaker. The result with oil is then divided by the mean result with water, and the quotient, multiplied by 100, is the "*Specific Temperature Reaction.*" Table CXVII., by Thomson and Ballantyne, shows the results they obtained by operating in this way with acids of three different strengths.

TABLE CXVII.

Sample.	H_2SO_4 95·4 per cent.		H_2SO_4 96·8 per cent.		H_2SO_4 99·0 per cent.	
	Rise of Temperature ° C.	Specific Temperature Reaction.	Rise of Temperature ° C.	Specific Temperature Reaction.	Rise of Temperature ° C.	Specific Temperature Reaction.
Water, . . .	38·6	100	41·4	100	46·5	100
Olive oil, .	36·5	95	39·4	95	44·8	96
	...	...	39·0	94	43·8	94
	34·0	88	38·1	92	44·2	95
Rape oil, .	49·0	127	...	...	58·0	124
Castor oil, .	34·0	88	37·0	89	...	...
Linseed oil, . .	101·5	270	...	...	125·2	269

Thomson and Ballantyne found, when testing the same sample of olive oil in two different beakers, one 3 inches and the other 4 inches in height, but both 2 inches in diameter, that the temperature rose 2° higher in the taller beaker; the same difference was observed with water; therefore, in whichever beaker the experiments were made, the specific temperature reaction, calculated from the thermal effects with water and oil in the same beaker, were almost identical, the figures being 93·5 and 93·8.

TABLE CXVIII.

Sample of Rape Oil.	Iodine Value by Hubl's Process.	Iodine Value calculated from the Bromine Thermal Value. $\beta \times 5{\cdot}92$.	Iodine Value calculated from the Sulphuric Acid Thermal Value. $\sigma \times 1{\cdot}67$.
No. 1	102·7	102·7	99·4
„ 2	103·3	103·0	101·4
„ 3	103·1	102·4	101·9
„ 4	105·7	104·8	106·5
„ 5	104·6	105·4	104·3
„ 6	106·2	105·9	106·0
„ 7	108·1	108·0	109·9
„ 8	109·4	110·1	111·4

The evolution of heat on mixing oils with sulphuric acid proceeds from a variety of chemical reactions; *e.g.* hydrolysis of the glycerides, sulphonation of the fatty acids and glycerol, and, as the temperature rises, destructive oxidation, accompanied by charring and evolution of sulphur dioxide. The evolution of heat depends largely upon the proportion and nature of the unsaturated fatty acids present, and bears a more or less definite relation to the iodine value. This relation, however, according to Hehner and Mitchell, is quite different with different oils and fats, unlike the relation between the bromine thermal value and the iodine value, which is nearly the same for most oils and fats. The comparative results (Table CXVIII.) obtained by Archbutt with rape oil, show that although the iodine value may be calculated very nearly from the Maumené figure, the bromine thermal value is a more reliable basis for calculation, notwithstanding the fact that the multiplier in the latter case is more than three times as large as in the former.

O.—DETECTION AND ESTIMATION OF ARACHIS OIL IN OLIVE OIL.

Arachis or earthnut oil so nearly resembles olive oil in general characters that the ordinary physical and chemical tests fail to detect its presence. The chief difference lies in the iodine values, which range as under:

	Lowest.	Highest.
Arachis oil, ...	83·3	105
Olive oil, ...	77·3	94·7

Whilst a high iodine value (say over 87 per cent., which is seldom exceeded by genuine olive oil) might, therefore, be due to the presence of arachis oil, a normal value is compatible with the presence of this oil in considerable proportion.

Arachis oil, however, contains from 4·3 to 5·4 per cent. of arachidic and lignoceric acids ($C_{20}H_{40}O_2$ and $C_{24}H_{48}O_2$), which, owing to their sparing solubility in cold alcohol, can be isolated without much difficulty. Olive oil contains not more than traces of these acids. Upon this difference in composition, Renard has based the following process for the detection and estimation of arachis oil, which is here described with some modifications in detail introduced by one of the authors.[1]

10 grms. of the suspected oil are saponified in a basin, as directed in E I. (p. 303), using 8 c.c. of 50 per cent. caustic soda solution and 70 c.c. of alcohol, boiled down gently to about 20 c.c., rinsed with hot water into a separating funnel, decomposed with hydrochloric acid in excess, and shaken with ether to extract the fatty acids. After distilling off the ether in an 8-oz. wide-necked flask, the fatty acids are dried by heating the flask on a steam-bath and sucking out the vapour, and are then dissolved by pouring 50 c.c. of rectified alcohol (sp. gr. 0·834) into the hot flask.

To the solution, which should not be hotter than 110° F., and must not be allowed to cool below 100° F., lest crystals of arachidic and lignoceric acids should separate, 5 c.c. of a 20 per cent. aqueous solution of lead acetate are added, which will precipitate the whole of the arachidic and lignoceric acids as lead soaps, together with some palmitate and oleate of lead.[2] After cooling to about 60° F. and allowing to stand for about half an hour, the alcoholic liquid is decanted through a filter, and the lead soaps are extracted with ether until the washings when shaken in a test-tube with H_2S-water give no colour, or only a slight brown; the soluble lead oleate is thus removed. It is best not to attempt to wash with ether more than once on the filter, but to

---

[1] *Jour. Soc. Chem. Ind.*, xvii. (1898), p. 1124.

[2] This quantity of lead is sufficient for 10 grms. of oil. If more be added, a larger precipitate is produced, containing more lead oleate, which takes more washing out with ether, but no more arachidic and lignoceric acids are obtained; in fact, if excess of lead be used, as recommended by some chemists, the quantity of these acids recovered is even less, probably owing to the solvent action of the solution of lead oleate in ether on the other lead soaps.

rinse the soaps back into the flask and digest with ether, then again filter and again rinse back, using the same filter each time. After doing this about four times, all the lead oleate will have been dissolved out. Washing on the filter takes a much longer time.

The filter paper containing the lead arachidate, etc., is opened out in a large plain funnel placed in the neck of a separating funnel, and, before the soaps have had time to dry, they are rinsed into the separator with a jet of ether from a washing bottle. The soaps which adhere to the paper and flask may be decomposed and transferred by rinsing with warm dilute hydrochloric acid, followed by ether. About 20 c.c. more hydrochloric acid (1·10 sp. gr.) are poured into the separator, shaken well to decompose the lead soaps, then run off, and the ethereal solution of the fatty acids is washed with small quantities of water until the lead chloride is removed. The ether is distilled off in an 8-oz. flask, and the residual fatty acids are heated in the water-oven until dry. They are then dissolved by warming with 50 c.c. of 90 per cent. ethyl alcohol (sp. gr. 0·8340), and the solution is cooled to 15° C., when arachidic and lignoceric acids, if present, will crystallise out, either at once or after standing a short time. The flask should be closed by a cork carrying a thermometer.

According to Tortelli and Ruggeri,[1] a rough estimate of the amount of earthnut oil present may be made at this stage by observing the temperature at which the crystals commence to form. For this purpose the liquid in the flask must be heated until the crystals have redissolved, and then allowed to cool slowly.

TABLE CXIX.

Temperature at which the crystals commence to form. °C.	Earthnut Oil, per cent.
35–38	100
31–33	60
28–30	50
25–26	40
22–24	30
20·5–21·5	20
18–20	10
16–17	5

In order to determine the proportion of earthnut oil more accurately, the liquid is allowed to stand for one hour,[2] with occasional agitation, at 15° or 20° C., or at some intermediate temperature which is nearest to that of the laboratory; the crystals are then collected on a small filter placed over a 100-c.c. cylinder, using the filtrate alone to rinse out the flask, and are washed several times with small quantities of 90 per cent. alcohol until the filtrate and washings measure 70–80 c.c., unless the quantity of crystals obtained is very small, in which case less may be used.[3] The filtrate and washings with

---

[1] *Chem. Zeit.*, xxii. (1898), p. 600.

[2] Tortelli and Ruggeri say three hours, but Archbutt's experiments show that one hour is enough.

[3] It is a good plan to do this washing with three separate quantities of alcohol, either 10 c.c. or 5 c.c. each, according to the size of the precipitate, and, after collecting the washing each time in a small beaker, to pour it back through the filter two or three times, so as to thoroughly saturate it before adding it to the main filtrate. Obviously, this must be done at the same constant temperature as that at which the crystallisation took place. A paper filter may be used, but a Gooch filter used with moderate suction is better, because the crystals can be more completely separated from the mother liquor.

90 per cent. alcohol must be measured. The crystals are then washed thoroughly with 70 per cent. alcohol (sp. gr. 0·8898) in which, according to Renard, arachidic and lignoceric acids are quite insoluble.[1] These washings are not measured, but the washing is continued until a few c.c. of the filtrate remain clear when diluted with water in a test-tube, showing that all soluble fatty acids have been washed out. The washed crystals are then dissolved off the filter with boiling ether, distilled down in a tared flask, and dried in the water-oven until constant in weight, for which one hour or less usually suffices. Finally, the melting-point is determined by capillary tube, or preferably by Bensemann's method (p. 272), and the point of incipient fusion should not be lower than 71° C.

Instead of weighing the crystals at this stage, Tortelli and Ruggeri recommend redissolving them in 50 c.c. of 90 per cent. alcohol, recrystallising for one hour at the same temperature as before, again filtering and washing, first with 90 per cent. and then with 70 per cent. alcohol, and then weighing. The crystals from pure earthnut oil, when thus purified, melt, by Bensemann's method, at 72·3°–73·3° C.[2] This recrystallisation is essential in the case of some Tunisian olive oils,[3] mixtures containing cottonseed oil, and solid fats such as lard,[4] which contain large percentages of saturated fatty acids, and must always be resorted to if the melting-point of the first crop of crystals is below 70° C.

As the mixed acids are slightly soluble in the 90 per cent. alcohol used for recrystallisation and washing, a correction must be made, which varies according to the weight of mixed acids obtained (*Tortelli and Ruggeri*). This correction is given by the following table:—

TABLE CXX.

Weight of Mixed Acids obtained. Grm.	Correction (grm.) to be added per 100 c.c. of 90 per cent. alcohol used for crystallization and washing at		
	15° C	17·5° C.	20° C.
0·05	+0·031	+0·040	+0·046
0·10	0·036	0·045	0·052
0·20	0·048	0·056	0·062
0·30	0·055	0·064	0·071
0·40	0·061	0·071	0·078
0·50	0·064	0·076	0·084
0·60	0·066	0·080	0·088
0·70	0·067	0·082	0·090
0·80	0·069	0·083	0·092
0·90	0·070	0·084	0·092
1·00	0·071	0·084	0·091
2·70	0·073	0·082	0·091

The percentage of mixed arachidic and lignoceric acids thus isolated from pure earthnut oil by Renard, De Negri and Fabris, Tortelli and Ruggeri, and

---

[1] Norman Evers has found that these acids are by no means insoluble in 70 per cent. alcohol. His table of corrections is given on p. 344. When using Renard's process as here described, however, no correction should be made for solubility in the 70 per cent. alcohol used.

[2] Tortelli and Ruggeri found the melting-point of the recrystallised acids, determined by capillary tube, between 74° and 75·5° C.

[3] *Jour. Soc. Chem. Ind.*, xxvi. (1907), pp. 454 and 1185.

[4] *Jour. Amer. Chem. Soc.*, xxix. (1907), p. 1756.

Archbutt, has varied from 4·28 to 5·40 per cent.; averaging about 4·8 per cent. Therefore, the weight of mixed acids obtained, multiplied by 21, is approximately equal to the weight of arachis oil in the quantity of oil taken for experiment.

The results in Table CXXI. show the degree of accuracy attainable by this method. 10 grms. of oil were taken for the analysis in each case, and the mixed acids were not recrystallised.

TABLE CXXI.

Composition of the Oil per 100 parts.		Volume of 90% Alcohol Temperature. Solubility Coefficient.	Mixed Arachidic and Lignoceric Acids.					Arachis Oil found, per cent.
Pure Olive Oil.	Pure Arachis Oil.		Dissolved in the Alcohol	Weighed	Total.	Per cent	Melting-point by Capillary Tube °C.	
	100	80 c.c. 15° C. ·063	·0504	·4480	·4984	4·98	71°	100
90	10	73 c.c. 15° C. ·033	0241	·0265	·0506	·506	71°	10·2
80	20	73 c.c. 15° C. ·033	·0241	·0715	·0956	·956	71°	19·2

The correctness of the method has also been proved by Renard, by De Negri and Fabris, and by Tortelli and Ruggeri. The latter chemists, working on 20 grms. of oil and recrystallising the mixed acids, obtained the following results:—

Arachis oil taken, per cent., .	60	50	40	30	20	10	5
Arachis oil found, per cent., .	60	50	40	31	22	11	6·7

Reimer and Will found in rape oil an acid of high melting-point, sparingly soluble in alcohol, which they believed to be behenic acid, $C_{22}H_{44}O_2$. Ponzio subsequently identified this acid as arachidic; but judging by the solubility in alcohol and the melting-point, it is probably a mixture of arachidic and lignoceric acids. Archbutt has isolated these acids from 33 out of 51 samples of commercial rape oil, and has proved that the quantity present may amount to as much as 1·43 per cent. He has also found the same acid in mustard oil.[1] It appears from these results that the fact of finding arachidic acid in olive oil is not conclusive proof of the presence of earthnut oil, unless rape and mustard oils are proved to be absent by other tests, of which the saponification

---

[1] *Jour. Soc. Chem. Ind.*, xvii. (1898), p. 1009.

value is the most important. Unless the saponification value of a sample of olive oil is below 19, neither rape nor mustard oil is likely to be present.

Bellier's Test.—The following simple test by Bellier[1] may be used for the detection of arachis oil in olive oil. It is reliable in the case of Spanish and Italian oils of the first or second pressing, but industrial neutralised olive oils, known as "saponified oils," prepared from the olive residuum oils and oils of the third pressing, which frequently contain as much as 3 per cent. or even more of unsaponifiable matter, apparently derived from the shell of the olive kernel, may give a flocculent precipitate in Bellier's test, though free from arachis oil. Whilst a negative result may, therefore, be accepted as indicating the absence of arachis oil, a positive result should always be confirmed by Renard's process. Bellier's test is made as follows:—

Solutions required.—1. Alcoholic potassium hydroxide solution, prepared by dissolving 8·5 grms. of pure potassium hydroxide in 70 per cent. alcohol and making up to 100 c.c.

2. Acetic acid of such strength that 1·5 c.c. will exactly neutralise 5 c.c. of No. 1 solution (120 c.c. of B.P. (36 per cent.) acetic acid diluted with water to 150 c.c. is approximately of the right strength).

1 grm. of the oil is weighed into a dry boiling-tube, 5 c.c. of No. 1 solution added and boiled gently over a small flame, holding the tube in the hand, until saponification is complete, which will take rather more than two minutes. Evaporation of the alcohol must be avoided as much as possible. Add 1·5 c.c. of No. 2 solution, *i.e. just* sufficient to neutralise the 5 c.c. of No. 1 solution, mix well, rapidly cool the tube in water at 17°–19° C., and leave in the water for about 30 minutes (*not less*), shaking occasionally. Then add 50 c.c. of 70 per cent. alcohol containing 1 per cent. by volume of hydrochloric acid (1·16), shake well, and again place in water for one hour. If arachis oil be absent, a clear or opalescent liquid is formed; if more than 10 per cent. of arachis oil be present, a flocculent, crystalline precipitate remains; even with only 5 per cent. of arachis oil a distinct precipitate remains, and separates on standing.

Norman Evers[2] has made a careful study of Bellier's test, both qualitative and quantitative. He has confirmed the observation of Franz[3] and Adler[4] that the above described qualitative test can be made approximately quantitative by determining the temperature at which a turbidity is first produced. This is shown by the figures in Table CXXIa. Evers found that a sample of

TABLE CXXIA.

Oil.	Temperature of Crystallisation.	Oil.	Temperature of Crystallisation.
	° C.		° C.
Olive oil, . . .	11·8–14·3	Arachis oil, 50 per cent., .	33·8
Arachis oil, 5 per cent., .	15·9–17·0	„ 60 „ .	35·3
„ 10 „ .	19·8	„ 70 „ .	36·6
„ 20 „ .	25·7	„ 80 „ .	38·0
„ 30 „ .	29·2	„ 90 „ .	39·3
„ 40 „ .	31·5	Arachis oils, . . .	40·0–40·8

---

[1] *Ann. de. Chim. Anal.*, iv. (1899), p. 4.

[2] *Analyst*, xxxvii. (1912), p. 487.

[3] *Beiträge z. Nachweis und z. Kenntniss d. Erdnussoles Diss. München*, 1910.

[4] *Zeitsch. Untersuch. Nahr. u. Genussm.*, xvii. (1905), p. 57.

"saponified" olive oil (see p. 148), free from arachis oil, gave a faint opalescence at as high a temperature as 45° C., which became more pronounced as the temperature was lowered, but no distinct precipitate could be seen, such as is observed when arachidic acid is present, until after standing at 15·5° C. for five minutes.

Evers' quantitative method, based upon Bellier's method, is described in the following paragraphs, and if carefully followed in all details will be found the best and most expeditious method for the estimation of arachis oil.

5 grms. of the oil are saponified by boiling in a flask under a reflux condenser with 25 c.c. of alcoholic potash (80 grms. potash dissolved in 80 c.c. water and diluted to 1 litre with 90 per cent. alcohol). To the hot solution are added 7·5 c.c. of dilute acetic acid (1 volume glacial acetic acid to 2 volumes water) and 100 c.c. of 70 per cent. alcohol containing 1 per cent. by volume of hydrochloric acid (1·16 sp. gr.), and the liquid is cooled to 12° or 14° C. for one hour. It is then filtered, and the precipitate is washed, at 17°–19° C., with 70 per cent. alcohol containing 1 per cent. hydrochloric acid, being occasionally stirred up in the filter by means of a loop of platinum wire. The washing is continued until the filtrate gives no turbidity when mixed with water, and the washings are measured. The precipitate is dissolved in hot 90 per cent. alcohol, 20 c.c. to 70 c.c. being used, according to the volume of precipitate, and the solution is cooled to a fixed temperature between 15° and 20° C. If crystals appear in any quantity, the liquid is allowed to stand at this temperature for one to three hours, filtered, washed with a measured volume of 90 per cent. alcohol (about half the volume used for crystallisation), and finally with 50 c.c. of 70 per cent. alcohol. The crystals are then washed with warm ether into a weighed flask; the ether is distilled off and the residue is dried at 100° C. and weighed. If the melting-point is lower than 71° C., the fatty acid residue must be recrystallised from 90 per cent. alcohol. Corrections are added for the solubility in 90 per cent. alcohol as given in Table CXX. on p. 341, and for the solubility in 70 per cent. alcohol as given in Table CXXII., the volume of 70 per cent. alcohol corrected for being that used in precipitation and washing, including the 100 c.c. added in the first instance.

Table CXXII.

Weight of Fatty Acids, corrected for Solubility in 90 per cent. Alcohol.	Correction per 100 c.c. of 70 per cent. Alcohol.		
	Melting-point, 71° C.	Melting-point, 72° C.	Melting-point, 73° C.
	Grm.	Grm.	Grm.
Above 0·10 grm., ...	0·013	0·008	0·006
0·008–0·10 grm., . . .	0·011	0·007	0·006
0·05–0·08 ,, . . .	0·009	0·007	0·005
0·02–0·05 ,, . . .	0·007	0·006	0·005
Less than 0·02 grm., . .	0·006	0·005	0·004
Factor for converting percentage of fatty acids to percentage of arachis oil, ...	17	20	22

If there are no crystals from 90 per cent. alcohol, or if they are in only very small amount, a sufficient quantity of water should be added to reduce the strength of the alcohol to 70 per cent. (31 c.c. water to 100 c.c. of 90 per cent. alcohol). The liquid is allowed to crystallise at 17° to 19° C. for an hour, filtered, washed with 70 per cent. alcohol, and the fatty acid weighed as before, the correction for solubility in 70 per cent. alcohol being added from Table CXXII. If the melting-point of the acids is below 71° C., they must be again dissolved and recrystallised from a small quantity of 90 per cent. or 70 per cent. alcohol. Results obtained by Evers by this method are given in Table CXXIII.

TABLE CXXIII.

Oil.	Alcohol used for Crystallisation, per cent.	Weight of Crystals.	Correction for 90 per cent. Alcohol.	Correction for 70 per cent. Alcohol.	Total.	Per cent.	Melting-point, °C.	Per cent. of Arachus Oil by Factor.
		Grm.	Grm.	Grm.	Grm.			
Arachis (A), . .	90	0·160	0·040	0·027	0·227	4·54	73	100
	70	0·218	..	0·065	0·283	5·66	71	96
„ (B), . .	90	0·163	0·045	0·032	0·240	4·80	72	96
	70	0·233	..	0·068	0·301	6·02	71	102
„ (C), . . .	90	0·152	0·054	0·034	0·240	4·80	72	96
„ (D), . . .	90	0·194	0·033	0·028	0·255	5·10	72	102
Arachis (A), 50 %, .	90	0·056	0·032	0·022	0·110	2·20	73	48
Olive "Nice," 50 %,	70	0·090	..	0·055	0·145	2·90	71	49
Arachis (A), 35 %, . Olive "Nice," 65 %,	90	0·045	0·020	0·029	0·094	1·88	71	32
	90	0·029	0·040	0·020	0·089	1·78	72·5	37
	70	0·059	..	0·040	0·099	1·98	71	34
Arachis (A), 20 %, .	90	0·024	0·012	0·019	0·055	1·10	71	19
Olive "Nice," 80 %,	70	0·030	..	0·024	0·054	1·08	71	18
Arachis (C), 20 %, .	90	0·012	0·020	0·015	0·047	0·94	72	19
Olive "Malaga," 80 %,	70	0·021	..	0·027	0·048	0·96	71	16
Arachis (A), 10 %, .	90	0·009†	0·008	0·008	0·025	0·50	73	11
Olive "Nice," 90 %,	70	0·008	..	0·015*	0·023	0·46	70	8
Arachis (B), 10 %, .	90	0	..	..	..	0	..	..
Olive "Nice," 90 %,	70	0·012	..	0·018	0·030	0·60	71	10
Arachis (C), 10 %, .	90	0	..	..	..	0	..	..
Olive "Malaga," 90 %,	70	0·011	..	0·016	0·027	0·54	71	9
Arachis (A), 5 %, . Olive "Nice," 95 %,	70	0·007	..	0·012*	0·019	0·38	..	6·5
Sesamé, . .	90	0	..	..	..	0	..	..
	70	0·012	..	..	..	0·24	64	..
Cottonseed, . .	90	0	..	..	..	0	..	..
	70	0·006	..	..	..	0·12	50–55	..
Olive "saponified"	90	0·014	..	..	..	0·28	64–67	..
	70	0·021	..	..	..	0·42	64–68	..

* In these cases the correction has been added for melting-point 71° C.

† This result was obtained by recrystallising from 10 c.c. of 90 per cent. alcohol the fatty acids obtained from 70 per cent. alcohol.

P.—COLOUR REACTIONS.

Most of the colour reactions which formed such a prominent feature of the older works treating of oil analysis have been shown to be caused, not by constituents of the oils themselves, but by impurities which are more or less perfectly removed in the processes of refining; and many of these reactions, based upon tests made with a limited number of specimens of oil, have been found by more extended experience to be valueless. Although the quantitative methods developed during recent years have made us much less dependent than formerly upon colour tests, the means of identifying oils in mixtures are still imperfect, and such colour reactions as are undoubtedly produced by natural constituents of particular oils, of which there are a few, are valuable.

I. Reactions of Cottonseed Oil.

(*a*) **The Halphen Reaction.**[1]—Cottonseed oil and oils containing it, if heated with carbon disulphide, free sulphur, and amyl alcohol, develop a characteristic rose-red colouration, the depth of which is not the same with all samples of cottonseed oil, but with the same sample is proportional to the amount of cottonseed oil present. The test is made as follows:—

3 c.c. of the oil, 3 c.c. of amyl alcohol, and 3 c.c. of a 1 per cent. solution of sulphur in carbon disulphide are mixed in a small test-tube and heated in a bath of boiling water. With as little as 5 per cent. of cottonseed oil present, a distinct rose-red colouration is developed in from fifteen to thirty minutes; the colour is more intense and more rapidly produced the larger the proportion of cottonseed oil. Less than 5 per cent. can be detected if the heating be continued for one hour, and especially if the colour be compared with that given by a pure sample of oil tested at the same time.

This is the simplest and best reaction for the detection of cottonseed oil. So far as is known, the only other commercial oils which give the reaction are kapok and baobab oil (Milliau, *Comptes Rendus*, 1904, p. 807), which would be equally objectionable in a lubricant. Nevertheless, too much reliance must not be placed on this or any other colour test. Thus, it has been found that cottonseed oil which has been heated to 240° C., or even to 150° C., if heated long enough, no longer responds to Halphen's test. It has also been observed that the fat of animals which have been fed on cottonseed cake may give the colour reactions of cottonseed oil, though none has been added (see *Silver Nitrate Test*). Thus, lard oil from the fat of pigs fed on cottonseed cake might be unjustly condemned if conclusions were drawn from the colour reaction alone. Hence, it is evident that these reactions should only be used as adjuncts to other tests, and no conclusions should be drawn from them, unless confirmed by the results of the quantitative reactions.

(*b*) **The Silver Nitrate Test.**—This test, originated by Becchi,[2] depends upon the presence in cottonseed oil of a substance which reduces silver nitrate. If the oil be saponified and the fatty acids isolated, they give the same reaction. In Becchi's test, the oil is heated with a complex reagent containing an alcoholic solution of silver nitrate, ether, nitric acid, amyl alcohol, and rape oil; but it is preferable to employ for the test a solution of the fatty acids in pure alcohol, as proposed by Milliau, omitting the amyl alcohol and rape oil. The following method of procedure is recommended:—

Approximately 5 grms. of the oil are saponified as directed in E I. (p. 303). The alcoholic soap solution, concentrated to about 10 or 15 c.c., is diluted with hot water, rinsed into a separating funnel, decomposed with excess of dilute sulphuric acid, and shaken with about 70 c.c. of ether to dissolve the fatty acids. After drawing off the aqueous liquid, the ethereal solution is washed four or five times with small quantities of cold water and poured into a flask. The ether is then distilled off, and the flask containing the fatty acids is heated on a steam-bath for a few minutes to evaporate the remaining traces of ether and water.

The fatty acids thus obtained are immediately dissolved by pouring 20 c.c. of absolute alcohol into the flask, and the solution is poured into a dry test-tube measuring 8 inches × 1 inch. The contents of the test-tube are raised

---

[1] *Jour. Pharm. Chim.*, 1897, **6** (9), 390.

[2] *Chem. Zeit.*, xi. 1328.

to boiling by cautiously heating over a small Bunsen flame, and then, whilst holding the test-tube over a white tile, 2 c.c. of a 30 per cent. aqueous solution of silver nitrate are added from a pipette. In the presence of 5 per cent. of cottonseed oil, a characteristic brown turbidity is produced almost immediately. The reaction is more rapid and intense the greater the proportion of cottonseed oil present. If there be no immediate reduction, the solution is kept under observation for a minute or two at boiling-point, by moving the tube to and fro from the tile to the flame, and if only 2 per cent. of cottonseed oil be present, a distinct reaction, though more slowly developed, will be obtained.

This reaction has been examined by a large number of chemists and found to be characteristic of cottonseed oil. Milliau states, however, that kapok and baobab oils give the same reaction. Some genuine rape oils appear to reduce the silver very slightly, but the reaction takes place slowly, and the colour produced is blackish, whilst with cottonseed oil it is brown. Possibly in these cases the precipitate is sulphide of silver, due to sulphur in the rape oil. In testing fats which have been exposed to the air, or have become rancid, it must be remembered that aldehydic bodies formed by oxidation may reduce the silver solution. Thus Bevan[1] found that lard which had been exposed to the air for some days gave Becchi's reaction, whilst some of the same lard taken from the interior of the mass had no reducing property. Hehner[2] states that genuine butter made from the milk of cows fed largely on cottonseed cake frequently gives the reaction of cottonseed oil.[3]

Since it is not known whether all samples of cottonseed oil reduce silver nitrate to the same extent, it is not safe to draw quantitative conclusions from this test; but an estimate of the proportion of cottonseed oil based upon the result of the colour test generally agrees fairly well with that calculated from the quantitative results.

Some chemists have obtained good results by the Milliau test, others have formed an unfavourable opinion of it. This different experience may be due to the fact that the fatty acids, if kept heated even to 100° C., and especially if washed with boiling water, gradually lose their reducing property.

Thus, the fatty acids obtained from a mixture of rape oil with 5 per cent. of cottonseed oil, which reduced silver nitrate immediately when first tested, completely lost the property by heating in the water-oven for one hour. 50 grms. of pure cottonseed oil were saponified and the fatty acids were obtained. After transferring 5 c.c. to a test-tube, the remainder of the acids were placed in the water-oven in a wide beaker, and at intervals of one hour 5 c.c. were taken out and transferred to tubes. The different quantities were then tested together and the amount of reduction compared. The fatty acids which had not been heated reduced the silver very strongly, the remaining quantities had a reducing power which diminished progressively, according to the length of time they had been heated, and after heating for nine hours it was estimated that about 95 per cent. of the reducing action had been lost.

A more rapid loss of the reducing property occurred when the fatty acids were repeatedly boiled with water. Thus, some fatty acids from pure cottonseed oil, which reduced silver very strongly, were boiled with water for one hour in a basin; the reducing property, though still strongly marked, had decidedly diminished. The same fatty acids were then boiled four times successively,

---

[1] *Analyst*, xix. (1894), p. 88.

[2] *Ibid.*, p. 89.

[3] Confirmed later by experiments made on behalf of the Board of Agriculture. See *Analyst*, xxiii. (1898), p. 255. Soltsien and others have also shown that American lard from pigs fed on cottonseed meal gives a strong colour reaction with the silver nitrate test and with Halphen's test; *Analyst*, 1902, p. 95, and 1903, p. 80. The colour-producing substance remains in the fat of the animal for many weeks after it has ceased to feed on the cottonseed meal. Fulmer, *Jour. Amer. Chem. Soc.*, xxvi. (1904), p. 837.

for only one or two minutes each time, with fresh quantities of water, when they were found to have lost from 85 to 90 per cent. of their original reducing power.

From these results it is evident that if the fatty acids for the Milliau test are prepared in the ordinary way, viz. by acidifying the hot soap solution in a basin, heating until the fatty acids are clear, washing with hot water and drying in the water-oven, erratic results may be expected. But by separating the fatty acids with ether in the manner described on p. 346, and by avoiding more than ten to fifteen minutes' heating to expel the ether, the results are more reliable.

Cottonseed oil, however, which has been heated to 240° C. no longer responds to either Becchi's or Milliau's tests.

(*c*) **The Nitric Acid Test.**—This test is given in the form recommended by Lewkowitsch. A few c.c. of the oil are vigorously shaken in the cold with an equal volume of nitric acid of sp. gr. 1·375 and then allowed to stand. If cottonseed oil be present, a characteristic coffee-brown colouration develops in a short time. Stronger acid gives less definite results.

In applying this test to a sample of oil, the colour obtained should be compared with that given under the same conditions by a pure sample of the same kind of oil and mixtures of a pure oil with cottonseed oil. The test is most useful in the case of *olive oil*, most samples of which, when pure, are scarcely changed in colour by the nitric acid, or at the most give a pale brownish-green or brownish-yellow colour on standing. But there are some neutralised *olive-residuum* oils, sold for lubricating, which give an immediate brown or greenish-brown emulsion when shaken with the nitric acid, darkening more or less rapidly, and the oil which separates on standing is dark brown. The colour given by these oils is quite different from that given by cottonseed oil, and, moreover, the oils give no other indication of the presence of cottonseed oil.

In consequence of an observation by Holde that refined *rape oil* when shaken with nitric acid of 1·41 sp. gr. also gives a brown colour, Lewkowitsch mixed a large number of samples of olive oil with varying proportions of cottonseed oil on the one hand and rape oil on the other, and shook them with nitric acid of 1·375 sp. gr. After standing for twenty-four hours, the two sets showed striking differences of colour; those containing cottonseed oil were of a pale brown colour, whilst those mixed with rape oil became more yellowish. In a similar series of tests made by one of the authors it was found, with one sample of rape oil, that although no brown colour was developed within forty minutes, whilst the mixtures containing 5 per cent. and upwards of cottonseed oil gave a distinct brown colour in the same time, on longer standing the mixtures containing rape oil also became brown in colour, and, before the end of twenty-four hours, could not be distinguished in shade from those containing cottonseed oil. Another sample of refined rape oil, undoubtedly genuine, when mixed in the proportion of 20 per cent. with the same sample of olive oil as was used in the above tests, gave a brown colour in forty minutes which could not be distinguished from the colour given by 20 per cent. of cottonseed oil. A more extended experience has confirmed the fact that many genuine rape oils give a brown colour when shaken with nitric acid of 1·375 sp. gr.

Some genuine *lards*, also *neatsfoot oil*, have been found to give a brown colour with nitric acid; but this should not mislead an experienced analyst, as the presence of cottonseed oil ought not to be certified unless it is confirmed by quantitative tests, such as the iodine value of the sample. The reaction with nitric acid has this advantage over Halphen's and the silver nitrate tests, that the brown colour is obtained with cottonseed oil which has been heated to 240° C., as well as with oil which has not been heated. Lewkowitsch states, however, that some American cottonseed oils which he had met with gave such a faint colouration with nitric acid that 10 per cent. could not be detected in olive oil by this test; but such oils are rare.

It may be noted that blown oils, both rape and cotton, even if present to the extent of only 10 per cent., give a very intense red-brown colour when shaken with nitric acid.

II. Reactions of Sesamé Oil.

Furfuraldehyde Test.—Sesamé oil contains a substance which produces a rose-red colouration when the oil, either pure or in admixture with other oils, is shaken with a solution of cane sugar in hydrochloric acid (*Camoin, Baudouin*).

In making the test, 0·1 grm. of pure cane sugar is first dissolved in 5 c.c. of cold, strong hydrochloric acid (1·16 sp. gr.); 10 c.c. of the oil are then added, the tube is corked, shaken for ten minutes, and allowed to stand. If only 2 per cent. of sesamé oil be present, the acid which separates will be pink in colour. If 5 per cent. and upwards be present there will be no need to shake for ten minutes, as the emulsion will be observed to become pink while it is being shaken.

Villavecchia and Fabris[1] find this colour reaction to be due to *furfural*, produced by the action of hydrochloric acid on sugar, and they have accordingly proposed to employ a solution of furfural instead of cane sugar. As furfural itself gives a violet colouration with hydrochloric acid, a very minute quantity must be used.

For the test, a 2 per cent. solution of furfural in alcohol is prepared. 0·1 c.c. of this solution is placed in a test-tube; 10 c.c. of hydrochloric acid (1·16) and 10 c.c. of the oil are added; the tube is then corked, shaken for half a minute, and allowed to stand. If even 1 per cent. of sesamé oil be present, the acid which separates has a pink colouration; with 5 per cent. a strong rose-red colour is obtained. This test is recommended, as it is simpler than the test with sugar, and half a minute's shaking is quite sufficient.

Several observers have found that in the case of certain olive oils of undoubted purity the acid liquid assumes "after a short time" a violet colouration. Villavecchia and Fabris[2] further state that some genuine Italian olive oils give a rose colouration similar to that produced by sesamé oil. We have confirmed this latter observation in testing a few genuine olive oils, but the pink colour observed by us has always been very faint. If, after ten minutes' shaking, the acid which separates is not distinctly pink or red in colour, sesamé oil should be assumed to be absent, and no notice should be taken of any colour which develops on standing. In any case, error is not likely to occur so long as the results of this test are supported by the results of the quantitative reactions. Milliau has found that if the test be applied to the fatty acids instead of to the oil, any possible error is obviated, and this has been confirmed by other chemists.[3] Therefore, Milliau's method should be adopted in any case where doubt exists as to the cause of the colouration.

Pure sesamé oils have been met with which gave only a feeble colouration in the furfural test, not more than one-tenth as much colour as those which reacted most strongly (*Lehnkering*). It has also been shown that rancid oils may give a brownish colouration with furfural which obscures the pink colour

---

[1] *Jour. Soc. Chem. Ind.*, xiii. (1894), p. 69.

[2] *Ibid.*, xii. (1893), p. 67.

[3] *Ibid.*, xvii. (1898), p. 275. The olive oils of Tunis are said to frequently give a red or rose colouration with the Baudouin test, but the fatty acids do not. See *Chem. Trade Journal*, 1902, p. 524.

to such an extent that as much as 17 per cent. of sesamé oil in such rancid oils may remain undetected. Rancidity of sesamé oil itself causes it to react less strongly with furfural, and may modify the colour obtained to green or blue instead of red.

Tocher's Test. 15 c.c. of the oil are shaken for about thirty seconds with a freshly made, practically colourless solution of 1 grm. of pyrogallol in 15 c.c. of concentrated hydrochloric acid (1·16 sp. gr.). The aqueous liquid is separated from the oil, poured through a wet filter paper and heated for fifteen minutes on a water-bath. In the presence of sesamé oil it becomes coloured reddish-purple, appearing red by transmitted and blue by reflected light. The test is very delicate, and will detect 2 per cent. of sesamé oil in olive or rape oil. Bellier says this reaction is not given by certain genuine olive oils which give a red colour in the furfural test.

III. Reactions of Cholesterol and Phytosterol.

(*a*) **With Chloroform and Sulphuric Acid** (*Hesse, Salkowski*).—If a few centigrammes of cholesterol be dissolved in 2 c.c. of chloroform and the solution be shaken with an equal volume of sulphuric acid of 1·76 sp. gr., the chloroformic layer at first becomes pink, deepening more or less rapidly (according to the quantity of cholesterol present) to blood-red, then cherry-red or purple, the latter colour persisting for some time and changing to a mahogany tint on prolonged standing. If some of the purple solution be poured into a porcelain basin, the colour soon fades to a dirty green and ultimately yellow, but the crimson or purple tint is restored on agitating again with strong sulphuric acid. The strength of the sulphuric acid used in this test is important, and a comparative experiment should be made with pure cholesterol. A crimson or purple colour is developed, though slowly, with as little as 5 mg. of cholesterol in 2 c.c. of chloroform. Salkowski states that the sulphuric acid which separates shows a strong green fluorescence. With pure cholesterol (probably from gall-stones) and sulphuric acid of 1·76 sp. gr. we have been unable to obtain more than a faint fluorescence, and that only after standing for a day or two. It has been suggested by Lewkowitsch that the green fluorescence is caused by the presence of isocholesterol.

(*b*) **With Acetic Anhydride and Sulphuric Acid** (*Liebermann*).—If to a cold solution of cholesterol in acetic anhydride, concentrated sulphuric acid be added, drop by drop, without shaking, a violet colouration, quickly changing to blue, is produced where the liquids meet. On shaking, the whole liquid becomes deep blue, slowly changing to green or bluish-green. This reaction is very delicate, and is given by less than 1 mg. of cholesterol in 2 c.c. of acetic anhydride. Isocholesterol gives the same reaction (*Schulze*). A violet or violet-red colouration is given also by solutions of colophony and rosin oil in acetic anhydride, but in these cases the colour (which is produced by *one drop* of sulphuric acid and shaking) does not change to blue, but either fades slowly to a neutral tint or (if heated) changes to a brown or yellow colour.

(*c*) **With Nitric Acid** (*Schiff*).—A crystal of cholesterol heated with a drop of concentrated nitric acid and slowly evaporated leaves a yellow spot which is turned red by ammonia. Isocholesterol gives the same reaction (*Schulze*).

(*d*) **With Hydrochloric Acid and Ferric Chloride** (*Schiff*).—If a little cholesterol be triturated with a drop of a mixture of 3 vols. strong hydrochloric acid and 1 vol. of ferric chloride solution, and slowly evaporated to dryness, the particles which have remained undissolved assume a violet-red colour, changing to blue. Some other substances, such as oil of turpentine and camphor, behave in the same way. Isocholesterol does not give this reaction.

IV. Detection of Rosin Oil.

(*a*) **The Liebermann-Storch Reaction.**[1]—If a small drop of rosin oil be dissolved in 2 or 3 c.c. of cold acetic anhydride and *one drop* of sulphuric acid of sp. gr. 1·53 be added to the liquid and shaken, a characteristic violet-red colouration is produced, becoming redder, then brown or greenish-brown. This reaction is given even by highly refined rosin oil.

To detect rosin oil in mineral oil, 2 c.c. of the sample are shaken for a minute or two in a dry test-tube with about 3 c.c. of acetic anhydride at a gentle heat and allowed to separate. After cooling, the acetic anhydride is drawn off with a fine pipette and transferred to another tube, or, preferably, the liquid is poured on to a small filter previously moistened with acetic anhydride, when the oil will remain on the filter and a bright filtrate will be obtained. To this filtrate one drop of sulphuric acid of sp. gr. 1·53 is added, and in the presence of rosin oil an immediate, very fugitive colouration, varying from violet-red to cherry-red, is obtained. Pure mineral oil gives a yellow or brown colour, which is sometimes so dark as to obscure the rosin oil reaction. In such cases, the test may be made more delicate by pouring one drop of the acetic anhydride filtrate into another tube before adding sulphuric acid; on diluting this with 1 or 2 c.c. of acetic anhydride and adding one drop of sulphuric acid to the diluted liquid, the violet colouration is more plainly seen. Five per cent. of rosin oil may be thus detected. Morawski points out that the dark colouration of mineral oil with sulphuric acid is intensified by the application of too much heat in shaking the oil with acetic anhydride, and that if the extraction be done in the cold a paler colour will be obtained and the rosin oil reaction will be less obscured.

Owing to the fact that cholesterol and phytosterol also give a violet colouration with sulphuric acid in acetic anhydride solution, Storch has stated that this test cannot be relied upon for the detection of rosin oil in the presence of fatty oils; but Morawski has found that the test is applicable to most vegetable oils, which, when pure, give only green, yellowish, or yellowish-brown colourations. If, therefore, the presence of rosin oil in a fatty oil be suspected, the colouration obtained should be compared with that yielded under similar conditions by a pure sample of the same fatty oil. In the case of oils such as shark-liver and others which, owing to the presence of cholesterol, do interfere with the test, Lewkowitsch suggests that the oil should be saponified, and after extraction of the unsaponifiable matter (including cholesterol) with ether, the fatty acids liberated from the soap solution should then be tested for rosin acids, which always accompany rosin oil. If the sample under test contains added rosin or rosin soap, this device of course fails; rosin oil must then be searched for in the unsaponifiable matter by other tests.

(*b*) **Holde's Test.**— According to Holde, if 5 c.c. of oil be vigorously shaken in the cold with 5 c.c. of sulphuric acid (1·60 sp. gr.) the acid layer which separates assumes a distinct red colour in the presence of rosin oil. The vegetable and animal oils and most mineral lubricating oils impart only a faintly yellow to yellowish-brown or grass-green colour to the acid. Various kinds of fish oil, imperfectly refined mineral oils, also tar oil, cause a dirty brown-red colouration of the acid; and, in such cases, the detection of rosin oil by means of this reaction is only made possible by extracting it with 90 per cent. alcohol and mixing the alcoholic extract in a test-tube with a small quantity of sulphuric acid of 1·53 sp. gr., which is allowed to flow down the side of the tube.

---

[1] *Jour. Soc. Chem. Ind.*, vii. (1888), pp. 135, 136.

Holde states that 1 per cent. of rosin oil can usually be detected by this reaction, but that very carefully refined rosin oils give either a faint reaction or none at all.[1] Our experience is that the test is decidedly less delicate than the Liebermann-Storch reaction. Pure rosin oil certainly gives a very characteristic bright red colour, which distinguishes it at once from pure mineral oil, but comparative experiments with pure mineral oil and mixtures of the same with rosin oil in different proportions showed that the mixture containing 5 per cent. of rosin oil gave only a very slightly redder colour than the mineral oil alone. The difference was distinct with 10 per cent., and still more so with 20 per cent. of rosin oil, but the reaction could not be depended upon for the detection of 10 per cent., except by making a blank experiment simultaneously with the pure mineral oil. Shark-liver oil and seal oil gave a red-brown colour, as stated by Holde. Refined rape oil scarcely coloured the acid, but with brown rape the whole mixture became nearly black in colour and the acid could not be distinguished from the oil.

V. Detection of Rosin Acids (Rosin).

The Liebermann-Morawski Reaction.—If a few milligrams of colophony be dissolved, by warming, in 2–3 c.c. of acetic anhydride and the solution be made quite cold, on adding *one drop* of sulphuric acid of 1·53 sp. gr. and shaking, a pure violet colour is produced, slowly fading to a neutral tint. With concentrated acid the colour is redder, and if the liquid be heated (*e.g.* by adding several drops of acid as in testing for cholesterol) the colour changes to brown or yellow.

To detect rosin in an oil, fat, or grease by means of this reaction, the substance should first be saponified and the soap solution shaken with ether to remove unsaponifiable matters, especially rosin oil and cholesterol. The fatty acids are then obtained from the soap solution and a small portion is dissolved in acetic anhydride in the cold, or at a very gentle heat. The solution having been made quite cold, sulphuric acid of sp. gr. 1·53 is allowed to flow down the side of the tube, and in the presence of rosin acids a colouration varying from violet to violet-red is produced where the liquids mix. Lewkowitsch has recommended this test as thoroughly trustworthy in all cases.

Q.—OXIDATION AND GUMMING OF LUBRICATING OILS.

I. **Fatty Oils.**—No absolute quantitative method of determining the oxidising properties of lubricating oils is known. The behaviour of the different fatty oils when exposed in thin films to the air at the ordinary or a slightly elevated temperature, leads to their classification in three divisions, viz.:—(1) *drying oils*, which by oxidation soon solidify to a varnish and therefore include the paint oils; (2) so-called *non-drying oils*,[2] which remain fluid for long periods and comprise the best lubricating oils; and (3) *semi-drying oils*, which form an intermediate class, drying but slowly, yet too oxidisable to be well adapted for lubricating. Rape oil, however, which is the least oxidisable of the semi-drying oils, is largely used as a lubricant by large consumers, owing to its comparatively low cost.

In the examination of olive oil, lard oil, sperm oil, and other well-known lubricating oils belonging to the non-drying class, also fats such as tallow,

---

[1] *Kohlenwasserstofföle und Fette* (1924), p. 248.

[2] Livache has shown (*Jour. Soc. Chem. Ind.*, xiv. (1895), p. 811) that all fatty oils, whether vegetable or animal, and even fats, if exposed to the air at a sufficiently high temperature (120°–160° C.), sooner or later dry up, forming a solid elastic product similar to that obtained from the drying oils.

it is as a rule sufficient to prove the absence of adulterants belonging to the drying and semi-drying classes by means of the ordinary physical and chemical tests, paying special attention to the iodine value, which is increased by the presence of the more easily oxidisable oils. But with rape oil the case is different. Genuine rape oils differ considerably in gumming properties, and a special oxidation test is not only useful but practicable, as rape oil is sufficiently oxidisable to give a decided result in a reasonable time. The following simple comparative test is usually made:—

(*a*) **Watch-glass Test.**—1 grm. of the sample of oil is weighed on a watch-glass, the same weight of a standard sample is weighed on another watch-glass of the same curvature, and the two glasses are placed side by side in a boiling-water oven, where they are left undisturbed for a certain number of hours. A good practice is to place the glasses containing the oils in the oven at, say, 5 p.m., and take them out at 9 a.m., *i.e.* after an interval of sixteen hours. The condition of the oils is then examined when cold.

Tested in this way, and using 1 grm. of the substance, rape oil of the very best quality does not dry, and does not appear to have thickened much when caused to flow by inclining the glass; inferior samples will have crept up and formed dry spots on the sides of the glass, and most rape oils will have thickened more or less considerably. The result of this test, considered in conjunction with the physical and chemical data, is of assistance in judging the quality of rape oil.

The same test is useful in the examination of olive oil. In this case 0·5 grm. should be used for the test, the other conditions remaining the same. Good olive oil will change very little in sixteen hours; inferior oil, dark green or greenish-brown in colour, will thicken considerably.

The object of using a weighed quantity of oil is merely to ensure uniform conditions, equal weights of oil in glasses of the same curvature exposing the same surface area; it is not worth while to attempt to get more out of the test by weighing the oil after exposure, as the changes in weight due to oxidation are small and erratic, some of the products of oxidation being volatile at 100° C.; they are also affected by variable traces of moisture in the oils, and no satisfactory result is thus obtained. (See Livache's test.)

(*b*) **Film Test.**—A less simple, but for some purposes a better test than the above is made by exposing the oil in a film on a glass plate at a temperature of 50° C. It is not easy to obtain continuous films, nor films of uniform thickness, and unless they are uniform the results are not comparable. The least trace of moisture on the surface of the glass, even the film of moist air condensed on all apparently dry cold surfaces, causes some oils to draw up into irregular patches and drops. This may be avoided by first heating the glass strongly and painting it with the oil while still hot.

Pieces of plate glass, say 3 inches square and $\frac{3}{16}$ inch thick, are carefully cleaned, wiped dry, and weighed. Each glass is numbered, and its approximate weight is marked on a card. The glasses are first heated in an air-oven to 200° C. for about half to one hour, then taken out and laid upon pieces of cork. As soon as they have cooled down to about 100°, the upper surface of each is thinly painted over, by means of a clean camel-hair brush, with the oil to be tested, and the glasses are then left to become quite cold. When cold they are placed again on the balance and more oil is dropped upon the centre of each plate until exactly 0·1 grm. has been made up. The plates are then laid, with the oiled sides upwards, upon a levelled sheet of plate glass, in an oven furnished with a regulator by which the temperature can be maintained at the temperature of 50° C. The oil last added will gradually spread over the surface of the glass. At intervals of a few hours the plates are removed from the oven, allowed to cool down to the temperature of the laboratory, and the condition of the oil tested by touching with the finger.

Even with the precautions above stated, the film will be thicker in some parts than others, and will not always dry at a uniform rate; but, by making duplicate tests, very fairly comparable results may be obtained. As a result of several tests made in this way it has been found that refined cottonseed oil dries to a varnish in from eighteen to twenty-four hours. Refined rape oil of good quality will not dry in less than fifty hours, some samples taking nearly twice this length of time to dry. Non-drying oils, including arachis, olive, neatsfoot, and lard oils, will not dry in 500 hours; arachis oil will thicken and become tacky sooner than olive oil, and olive oil sooner than neatsfoot and lard oils.

The following results by Holde[1] were obtained by spreading "1 drop" of the oil on a glass plate measuring 5×10 centimetres and exposing to air at 50° C. for twenty-four hours. The film thus obtained would be thinner than that formed in the above-described test, and might be expected to dry more quickly.

TABLE CXXIV.—EFFECT OF EXPOSING SOME FATTY OILS IN THIN FILMS TO AIR AT 50° C. (*Holde*).

Kind of Oil.	Consistence after 24 Hours' Exposure.	Kind of Oil.	Consistence after 24 Hours' Exposure.
Sperm oil,	Unchanged.	Mustard oil,	Sticky, to dry.
Castor oil,	"	Earthnut oil,	"
Bone oil,	"	Sesamé oil,	Dry.
Olive oil,	Unchanged, or slightly thickened.	Cottonseed oil,	"
Almond oil,	Perceptibly thickened.	Sunflower oil,	"
Crude rape oil,	Perceptibly thickened, to sticky.	Poppy oil,	"
Refined rape oil,	Sticky, to dry.	Fish oil,	"
Whale oil,	Thicker, to sticky.	Cod-liver oil,	"
		Train oil,	"

(*c*) **Livache's Test. Increase of Weight by Oxidation.**—Any attempt to measure the rate of oxidation of fatty oils by ascertaining the increase of weight at elevated temperatures is met by the difficulty that some of the products of oxidation are volatile. Thus Kissling[2] found, by passing air through linseed oil heated to 100° C., that, of 0·87 per cent. of oxygen taken up daily, 0·46 per cent. was carried away in the form of volatile acids of the methane series, carbon dioxide, and other products. Experiments by the same author on oils exposed to the air at 100°-105° C. in clock-glasses showed that the loss of weight by volatisation frequently exceeded the gain of weight by oxidation. On the other hand, the gain of weight at the ordinary temperature is much too slow to be made the basis of a practical test.

Livache, however, has shown that the rate of oxidation is greatly accelerated by mixing the oil with finely-divided copper, tin, or lead, the latter giving the best results.

The lead is prepared from solution of a lead salt by precipitation with sheet zinc, washing the precipitate well with water, alcohol, and ether, and drying *in vacuo*. About 1 grm. of the dry powder is spread out on a large tared watch-glass, and an accurately weighed quantity, somewhat over 0·5 grm. but not exceeding 0·7 grm., of the oil is spotted over it from a pipette. taking care that the drops do not run into one another. The whole is then

---

[1] *Die Untersuchung der Schmiermittel* (1897), p. 98.

[2] *Zeits. angew. Chem.*, 1895, p. 44.

weighed and allowed to remain exposed to light and air at the ordinary temperature.

Drying oils tested in this manner commence to gain weight rapidly, the maximum increase taking place in a few days, whilst the non-drying oils must be left for fully seven days before any useful result is obtained. Evidently this test is unsuited for the routine testing of lubricating oils, though it may be found useful in special cases.

Livache obtained the following results:—

Table CXXV.—Increase of Weight of Oils by Oxidation (*Livache*).

Kind of Oil.	Percentage Increase of Weight.		
	Of Oil after		Of Fatty Acids after 8 Months.
	Two Days.	Seven Days.	
Linseed oil, ...	14·3	...	11·0
Walnut oil, ...	7·9	...	6·0
Poppyseed oil, . . .	6·8	...	3·7
Cottonseed oil, . .	5·9	...	0·8
Beech nut oil, . .	4·3	...	2·6
Colza oil, ...	nil.	2·9	2·6
Rape oil, ...	”	2·9	0·9
Sesamé oil, ...	”	2·4	2·0
Arachis oil, ...	”	1·8	1·3
Olive oil, ...	”	1·7	0·7

(*d*) **Bishop's Test.**[1]—Bishop has modified Livache's test by dissolving manganese resinate in the oil to be tested and using an inert absorbent, viz. ignited silica, instead of spongy lead.

Purified manganese resinate is prepared by digesting the commercial article in ether, filtering, distilling off the solvent, and powdering the dry residue. Two per cent. by weight of this is added to 5–10 grms. of the oil previously weighed in a beaker, and the mixture is heated on the water-oven, with occasional agitation, until the resinate is dissolved (taking five to ten minutes); it is then allowed to cool.

1 grm. of freshly ignited precipitated silica is next weighed in a flat-bottomed capsule of 5·5 cm. diameter, containing a small glass rod, and as nearly as possible 1·02 grm. of the mixture (1 grm. oil + 0·02 grm. resinate) is distributed from a fine pipette in small drops all over the surface. The whole is then weighed. The oil and silica are intimately mixed by means of the glass rod, the mixture is spread out in a layer of uniform thickness all over the bottom of the dish, then exposed to air at 20° to 30° C., and weighed at intervals of six hours. After each weighing, the contents of the dish are stirred afresh.

In this test, oxidation takes place most rapidly within a limited range of temperature, which is not necessarily the same for each oil. Thus between 17° and 28° C. linseed oil reached the maximum weight in from twenty-four to thirty hours from the commencement; after that there was a gradual loss of weight. Hempseed, poppyseed, walnut, and cottonseed oils reached the maxima in from twenty-four to twenty-eight hours at 22°–28° C., whilst sesamé oil at the same temperature took from seventy-two to ninety-six hours. Arachis oil increased 6·7 per cent. in weight in ninety-six hours at 14°–34·5° C.;

---

[1] *Monit. Scient.*, 1896, p. 259.

another sample gained only 4·8 per cent. in 114 hours at 17°–23° C. Colza and olive oils gain weight very slowly; although a change is perceptible within twenty-four hours, the maximum is not reached for many days or even weeks. Experiments, however, showed that the adulteration of olive oil with oils of more strongly marked drying character caused the most marked effect in the first twenty-four hours. See Tables CXXVI. and CXXVII.

TABLE CXXVI.—CHANGE OF WEIGHT (PER CENT.) BY OXIDATION OF COLZA OIL (*Bishop*).

Number of Hours Exposed.	Colza Oil (French). Sp. Gr. 0·9142 at 15° C.		Colza Oil (Indian). Sp. Gr 0·9137 at 15° C.	
	Temp. 28°-20°.	Temp. 20°-15°.	Temp. 28°-20°.	Temp. 20°-15°.
6	−0·20	−0·10	−0·20	−0·10
22	+2·25	+0·30	+1·10	±0·0
24	3·20	0·50	1·90	+0·20
30	4·00	1·80	2·90	0·90
48	4·90	4·20	3·80	3·40
72	5·50	...	4·50	...
96	5·80	5·60	5·00	4·70
192	...	5·80	...	5·10
288	6·40	...	5·80	...
432	...	6·40	...	5·90

A summary of Bishop's results is given in Table CXXVIII. on p. 357. This test deserves further investigation in connection with lubricating oils.

(*e*) **Oxygen Absorption Test.**—Angus Smith[1] in 1870 used the following test in examining some samples of rape oil intended for lubricating:—A measured quantity of the oil, from 3 to 5 c.c., was confined over mercury in a

TABLE CXXVII.—CHANGE OF WEIGHT (PER CENT.) BY OXIDATION OF PURE AND MIXED OLIVE OIL (*Bishop*).

Number of Hours Exposed.	Olive Oil. Sp. Gr. 0·9155 at 15° C.		
	Pure.	+20% Arachis Oil.	+20% Cottonseed Oil.
	Temp. 14°-34·5°.	Temp. 14°-34·5°.	Temp. 14°-34·5°.
24	+0·80	+1·75	+3·25
48	2·40	3·00	4·25
72	3·40	4·00	4·80
144	4·70	4·75	5·60
384	5·30	5·55	6·05
	Temp. 17°-28°.	Temp. 17°-23°.	Temp. 17°-23°.
24	−0·30	−0·30	−0·30
48	−0·20	−0·20	+0·50
72	+0·90	+1·70	2·90
144	2·20	3·10	3·80
264	2·30	3·50	3·90

---

[1] Private report.

graduated tube filled with oxygen. Absorption took place slowly but steadily during twenty-two days, when the experiment was stopped and the total volume of gas read off.

				Ratio.
100 c.c. of oil	No. 1	absorbed	37·8 c.c., ...	148
„ „	No. 2	„	47·8 c.c., ...	187
„ „	No. 3	„	25·5 c.c., ...	100

The volumes of oxygen absorbed in the first forty-eight hours were approximately in the same ratio. Angus Smith considered that the lubricating values of these three oils would be in the inverse order of their oxygen-absorbing powers.

TABLE CXXVIII.

Description of Oil.	Specific Gravity.	Increase of Weight Per Cent.	Mean Values.
Linseed oil (French), . .	0·9327	17·70–16·40	17·05
„ (La Plata), . .	0·9304	15·45–15·00	15·20
Hempseed oil, . . .	0·9287	14·55–14·30	14·40
Poppyseed oil (French), . .	0·924	14·50–13·90	14·20
Walnut oil, ...	...	13·70	13·70
Cottonseed oil, . . .	0·924	8·60	8·60
„ (chilled), . .	0·923	9·60– 9·30	9·45
Sesamé oil (Senegal), . .	0·9215	8·95– 8·50	8·70
„ (Indian), . .	0·921	7·40	7·40
Arachis oil (African), . .	0·916	6·70	6·70
„ (white), . .	0·916	6·50	6·50
Colza oil (French), . .	0·9142	6·40 ?	6·40 ?
„ (Indian), . . .	0·9137	5·90– 5·80 ?	5·85 ?
Olive oil, ...	0·9155	5·30 ?	5·30 ?

Fox[1] has described the following method: About 1 grm. of the oil is sealed up with 0·5 grm. of precipitated lead in a glass tube having a capacity of about 100 c.c. The whole is then heated in an oil-bath for several hours at 105° C., when the amount of oxygen absorbed is determined by noting the decrease in volume of gas in the tube. The following results were thus obtained :—

TABLE CXXVIIIA.

Kind of Oil.	c.c. of oxygen absorbed by 1 grm. of oil.
Linseed oil, ...	126 to 191
Cottonseed oil, ...	24·6
Rape oil (brown), ...	20·0
Colza oil, ...	17·6
Olive oil, ...	8·2–8·7

Bach,[2] following Fresenius,[3] used a similar method, omitting the lead. A known quantity of oil was heated for ten hours with oxygen in a sealed tube of 100–125 c.c. capacity in an air-bath at 110° C. The point of the tube was

---

[1] *Analyst*, viii. (1883), p. 116.
[2] *Chem. Zeit.*, xiii. p. 905.
[3] *Ibid.*, iv. p. 905.

then broken under water and the absorbed oxygen calculated from the volume of water drawn in. The results given in Table CXXIX. were thus obtained.

TABLE CXXIX.

Kind of Oil.	c.c of oxygen absorbed by 1 grm of oil.
Rape oil, ...	166
Olive oil, ...	144
Cottonseed oil, ...	111
Rosin oil, ...	181
Rosin oil, redistilled, so-called 'cod oil' (Lewkowitsch), ...	96·3
Mineral lubricating oil (·865), . . .	4·8
" " (·877), . . .	·7
Russian mineral oil, ...	·74
Cylinder and valve oils, ...	·10–·45

Holde[1] describes the following method. From 1–1·5 grm. of freshly ignited pumice stone, in grains about the size of mustard-seed, is placed in a glass tube 30–40 cm. long and 20–30 mm. in diameter, sealed at one end, and from 0·3 to 0·5 grm. of the oil is slowly dropped on to the pumice from a tared beaker: the exact weight added is ascertained by weighing the beaker afterwards. The open end of the tube having been drawn out and allowed to become cold, the air is displaced by oxygen and the tube is quickly sealed with a fine blow-pipe flame. After heating in a water-bath for several hours, the end of the tube is broken off under water, and the volume of oxygen absorbed is measured. The most suitable temperature and time of heating depend upon the kind of oil experimented upon. Three hours' heating in a boiling-water bath were given in the experiments the results of which are recorded in the following table:—

TABLE CXXX.

Description of Oil.	c.c. of oxygen, reduced to 20° C., and 760 mm., absorbed by 1 grm. of oil.	
	Single Values.	Mean Values.
Cottonseed oil, ...	68·7	68·7
Brown rape oil, ...	45·5 ; 49·7	47·6
Olive oil, ...	33·3 ; 34·0	33·7
Mixture of bone oil and refined rape oil, ...	32·1 ; 28·1 ; 33·0 ; 28·0	30·3
Mixture of bone oil and refined rape oil, ...	(29·9) ; 24·7 ; 22·0 ; 22·2	23·0
Sperm oil, ...	24·5 ; 23·9 ; 25·3 ; 24·4	24·5
Sperm oil, ...	18·3 ; 16·6 : 14·2	16·4

II. **Mineral Oils.**—Although, as is shown by Bach's experiments,[2] mineral lubricating oils are able to absorb small quantities of oxygen when heated with

---

[1] *Die Untersuchung der Schmiermittel*, 1897, pp. 96 and 100; see also *Kohlenwasserstofföle und Fette*, 1924, p. 240.

[2] See also abstracts of papers by Ostrejko in *Jour. Soc. Chem. Ind.*, xv. (1896), pp. 26, 345, and 645.

it, the amount of oxidation which occurs at ordinary temperatures with good mineral oils is practically *nil*. The thickening or "gumming" of such oils, when it does occur, is due chiefly to the evaporation of the more volatile hydrocarbons and the concentration of asphaltic, resinous, or tarry matters in the residue. Gumming is most marked in the case of the dark residuum-containing oils used for railway and rough work; the refined, pale, and charcoal-filtered oils, from which the resinous and asphaltic constituents have been removed, undergo scarcely any change except a thickening due to evaporation when heated. Useful information may, nevertheless, be obtained, when comparing one mineral oil with another, by heating 1 grm. in a shallow dish in a water-oven for several days. Some mineral oils deposit carbon and become thick and sticky when thus tested.

The results of experiments by Holde,[1] who has paid considerable attention to this subject, are summarised in the following paragraphs:—

When exposed to the air in thin films (1 drop of oil on a 5×10 cm. glass plate), transparent, distilled, and carefully refined mineral lubricating oils do not resinify after one or more months' exposure at room temperature, or when heated to 50° or 100° C. At the higher temperature, they for the most part evaporate, leaving only traces of oil, in thirty-five hours. Dark, residuum-containing oils, by long exposure at room temperature, resinify very little, but at 50°–100° C. a marked thickening and, with very tarry oils, complete resinification occurs, whilst the greater part of the more volatile hydrocarbons evaporate, and the remainder partially oxidise or polymerise, adding to the tarry and asphaltic contents of the residue

In thicker layers (0·20–0·25 grm., exposing a surface area of 75 cm.^{2}), the paler coloured and resin-free distilled oils do not resinify even at 100° C.; the darker coloured distillates, however, containing 1 per cent. to 3 per cent. of natural resin, after heating for several months and undergoing partial evaporation, may leave resinous residues. Dark residuum-containing oils, similarly treated, yield viscid or solid products, even after the first few months, and after fifteen months the residues are quite hard and pitchy.

The resins left by heating mineral oils are insoluble or incompletely soluble in petroleum spirit; in benzol, however, they dissolve completely.

R 1.—RESINOUS AND ASPHALTIC IMPURITIES IN MINERAL OILS. ESTIMATION OF HARD AND SOFT ASPHALT.

Although mineral lubricating oils do not oxidise and gum in the same way as vegetable and animal oils, they are by no means chemically inert. Some of the constituent hydrocarbons undergo changes resulting in the formation of resinous and asphaltic bodies, which give rise to carbonaceous and other deposits in the cylinders and valve chests of steam and internal-combustion engines, in crank cases, air-compressors, steam-turbines, and wherever the oil is subjected to the action of air and heat. Deposits ("sludge") are formed, under similar conditions, in oil-cooled electrical transformers and switches.

These resinous and asphaltic bodies are found as natural constituents of crude petroleum, some of them causing the dark colour of the oil; further quantities are also formed during the distillation of the crude oil, and during storage and use. All natural petroleums are not equally subject to asphalt formation, and very variable quantities are found in the crude oils of different countries. Thus, Pennsylvanian and Russian petroleums are poor in asphalt,

---

[1] *Die Untersuchung der Schmiermittel* (1897), pp. 88–89; also *Kohlenwasserstoffole und Fette*, 1924, pp. 239 and 240.

Californian, Texas, and some Mexican oils are rich, whilst German, Galician, and Roumanian oils occupy an intermediate position (*Holde* [1]).

The resinous and asphaltic constituents of petroleum chiefly exist in colloidal solution. They are formed, according to Engler, from unsaturated hydrocarbons, by polymerisation and condensation, aided by the chemical and catalytic action of oxygen and sulphur. Mineral catalysts also actively aid in their formation, and especially in the formation of asphaltic (carbonaceous) deposits in engine cylinders and machines. Dark-coloured mineral lubricating oils containing natural asphalt can be used for many purposes, such as grease-making, the lubrication of axles, wire ropes, railway points, etc., without any trouble resulting from the contained asphalt. If, however, the oil is required for purposes where such impurities are likely to cause trouble, special tests are used to ascertain the amount of these impurities and the liability of the oil to form further quantities and give rise to deposits. The tests at present in use represent the transitional state of our incomplete knowledge of the constituents of mineral lubricating oils and of the changes which they undergo in use.

1. **Hard Asphalt, insoluble in Petroleum Spirit.**—Bender [2] found that dark coloured mineral oils, when dissolved in petroleum spirit and allowed to stand, deposit a substance which, when collected, washed and dried, resembled asphalt. The asphalt precipitated is not, however, a simple substance, but a mixture of asphaltic and resinous matters, differing in chemical composition and solubility, to which the term "asphaltenes" has been applied by Richardson. Holde and others have found that the quantity of these substances thus precipitated from petroleum depends upon the composition and boiling-range of the petroleum spirit used, the relative volume of spirit, and the time of standing. The presence of aromatic compounds and higher boiling range increase the solvent power of the spirit. The results obtained are, therefore, relative and not absolute, and to ensure concordant results in duplicate tests on the same oil, the test must be carried out under strictly uniform conditions. The *Standard Method* for the estimation of hard asphalt adopted by the Institution of Petroleum Technologists,[3] based upon the method of Holde, is as follows:—

Petroleum Spirit.—The spirit used must be freed from aromatic hydrocarbons by treatment with its own volume of 98–100 per cent. sulphuric acid. When tested by I.P.T. method G.3,[4] it shall distil between 60° and 80° C.

Method.—10 grms. of the sample shall be dissolved in 100 c.c. of petroleum spirit, thoroughly mixed, and allowed to stand twenty-four hours. The whole shall be filtered through an 11 cm. folded filter and washed with petroleum spirit until the washings are colourless. The material on the paper shall be dissolved in benzol, the solution being collected in a weighed conical flask. The solvent shall be distilled off on a water -bath, the asphalt dried in a steam oven for one hour and weighed.

Note by Authors.—As the solubility of asphalt in benzol diminishes on standing, the process should be completed without a break. According to Holde, with cylinder oils paraffinoid bodies may be precipitated with the asphalt, and can be separated by boiling with absolute alcohol as described under the estimation of soft asphalt. This, however, would be a departure from the standard method.

2. **Soft Asphalt (Asphalt-Pitch), insoluble in Alcohol-Ether** (1 : 2).—By dissolving dark mineral oils in a mixture of alcohol and ether, Holde found that

---

[1] *Kohlenwasserstofföle und Fette*, 1924, p. 105.

[2] *Mitt. königl. tech. Versuchs.*, Berlin, 1890, p. 311.

[3] I.P.T., *Standard Methods*, 1924, p. 69.

[4] See I.P.T., *Standard Methods*, 1924, p. 5.

a precipitate was obtained which included the hard asphalt (asphaltenes) left insoluble by petroleum spirit, together with soft resinous and pitchy substances of lower melting-point. The amount thus obtained from a given oil increases with the proportion of alcohol in the solvent. This method, therefore, like the preceding, must be carried out under uniform conditions. The *Standard Method* of the Institution of Petroleum Technologists[1] for the estimation of soft asphalt is as follows:—

5 grms. of the well-mixed oil in a 300 c.c. glass-stoppered bottle shall be dissolved in 135–140 c.c. of ethyl-ether of sp. gr. 0·72 at room temperature. With constant shaking, 70 c.c. of 96 per cent. alcohol shall be added slowly from a burette. After a final shaking, the solution shall stand five hours at 15° C., and then be rapidly filtered through a pleated filter.

The bottle and filter shall be washed with a mixture of 96 per cent. alcohol and ether (1 : 2) until about 20 c.c. of the filtrate evaporated give only traces of tarry matter. The washed asphaltic pitch, which still contains paraffin and soft resins, shall be dissolved from the sides of the bottle, and from the filter paper, by means of hot benzol, and evaporated in a tared glass dish containing a weighed glass stirring-rod. The residue shall be boiled with 30 c.c. portions of absolute alcohol, rubbing with the glass rod, until extracts on cooling and shaking give no precipitate of paraffin; it shall then be dried at 100° C. and weighed.

3. **Other Resinous Constituents.**—Besides the hard and soft asphalt (asphaltenes and asphalt-resins) extracted from mineral oils by the above described methods, there are other resinous substances which are not estimated by these methods. Holde and Eickmann,[2] by shaking mineral lubricating oils with 70 per cent. alcohol have extracted from them transparent resins resembling colophony in appearance, but giving in the Morawski test a yellowish-brown or dirty brown colour, instead of the violet colour given by colophony. Some of these resins are soluble in petroleum spirit, others are insoluble, but they dissolve completely in alcohol-ether (4 : 3 and also 3 : 4). Some are neutral, others feebly acid. The quantity obtained in this way by Holde and Eickmann was usually not more than 0·6 per cent. from pale oils and 1 per cent. from dark oils, but up to 3·5 per cent. was obtained from badly refined oils. These resins were found to range in oxygen content, iodine value, and viscosity from the figures given by refined mineral oil to those given by asphalt, and they are considered by Marcusson to represent a transitional stage in the formation of asphalt from mineral oil hydrocarbons.

Larger quantities of resinous bodies were obtained by utilising the adsorbing powers of fuller's earth or animal charcoal. When these materials are added to a mineral oil they adsorb the asphaltic resins and naphthenic acids, as well as the hydrocarbon oil and paraffin-wax, but whilst the oil and wax can be recovered quantitatively by washing the earth or charcoal with petroleum spirit, the resins and acids are irreversibly adsorbed (as shown by Gurwitsch) and cannot be redissolved by the spirit; they can, however, be readily dissolved by other solvents, such as benzol or chloroform. The rate of adsorption of the resins by animal charcoal has been shown by Rakusin to be very high. It suffices, therefore, to place a mixture of mineral oil and animal charcoal in a Soxhlet thimble and at once extract with petroleum spirit, to separate the asphaltic resins from the oil. The subject has been carefully studied by F. H. Garner.[3] He found that animal charcoal

---

[1] I.P.T., *Standard Methods*, 1924, p. 98.

[2] See Holde, *Kohlenwasserstofföle und Fette*, 1924, p. 237.

[3] "The Carbonisation of Lubricating Oils in Internal Combustion Engines," *Jour. Inst. Petro. Tech.*, vii. (1921), p. 98.

gave more consistent results than fuller's earth, and that the results obtained depended on the proportion of charcoal to oil and on the time of extraction. There must be sufficient charcoal to adsorb all the resins; too much charcoal led to the adsorption of other constituents, and too prolonged extraction led to loss through the slight solubility of the resins. Garner considers that the percentage of asphaltic resins adsorbed by animal charcoal from a mineral lubricating oil is a guide to the liability of the oil to form carbonaceous deposits, but further work on these lines is required. For further information on the subject, Garner's paper should be consulted. It contains a useful list of references to the most important papers bearing on the subject up to the date of his paper.

R 2.—OXIDATION (CARBONISATION) AND COKING TESTS OF MINERAL LUBRICATING OILS. WATERS TEST. RAMSBOTTOM TEST. CARBON RESIDUE TEST. OTHER TESTS AND REMARKS.

A number of tests have been proposed for determining the liability of mineral lubricating oils to form deposits of tarry, asphaltic, and carbonaceous matter in cylinders and elsewhere. The tests usually made are of two kinds, viz.:—

(*a*) Tests which estimate the amount of asphalt insoluble in petroleum spirit (asphaltenes) formed under specified conditions of heating and oxidation. These are sometimes termed "oxidation tests" and sometimes "carbonisation tests." To avoid confusion with the tests referred to in the next paragraph, it seems desirable that the term "carbonisation" should not be used for these tests.

(*b*) Tests which measure the amount of coke or carbonaceous residue left when the oil is rapidly decomposed by boiling away. These are termed "coking tests" or "carbon residue tests."

Under (*a*) we shall here describe the Waters Test. The Michie Standard "Sludging Value" test, which is also an oxidation test, but generally used for transformer and switch oils, is described in the Section R 3, on p. 366. Under (*b*) the Ramsbottom Test and the official Standard Carbon Residue Test will be described. In all these tests the results obtained are dependent upon the conditions, and unless the same procedure is followed exactly in every detail, the results of different tests on the same oil will not agree. The Waters test and the Ramsbottom test are not standard methods in this country, but they are regularly used and considered of value by some chemists who prefer them to the standard methods.

1. **Waters Test.**—This method, due to C. E. Waters of the U.S. Bureau of Standards, is based upon Kissling's method[1] of determining the tar-forming and (so-called) coke-forming values of mineral oils, omitting the preliminary treatment with alcoholic soda. The following particulars are taken from Circular No. 99 of the U.S. Bureau.

Apparatus required.—(1) Erlenmeyer pattern flasks of 150 c.c. capacity, 65 mm. internal diameter in the widest part, bore of neck 21–22 mm. Flasks of this size (measured by means of suitable internal calipers) are selected from a consignment.

(2) An electrically heated air-oven, in which the flasks are heated with their open necks projecting through holes in the top of the oven and suitably protected from dust. The essential features of such an oven are, that the flasks must be uniformly heated, can always be brought to the required temperature in approximately the same time, and can be maintained at the

---

[1] *Chem. Zeit.*, **30** (1906), 932; **31** (1907), 328; **32** (1908), 938; **33** (1909), 521.

same fixed temperature throughout the period of the test. A minute, detailed description of a suitable oven for heating four flasks at one time is given in the Circular 99.

Method.—10 grms. of each oil to be tested are weighed into one of the four flasks, the flasks are fixed in position in the oven and brought to a temperature of 250° C. (482° F.) in about thirty minutes. They are maintained at that temperature for two hours, the current is then turned off and the flasks are allowed to cool in the oven for about one hour, after which they can be weighed, if desired, to determine the evaporation loss. To each flask is then added 50 c.c. of petroleum spirit (86 88° gasoline) the flask is tightly corked, the liquid contents gently swirled to dissolve the thickened oil and allowed to stand until the next day. The insoluble precipitate is then collected on a Gooch filter, washed with petroleum spirit, dried at 100° C. and weighed; or it may be dissolved through the filter in hot benzol, the benzol evaporated off, and the residue weighed.

Essential conditions of the test are, (1) an ample supply of air circulating over the surface of the oil, (2) flasks in which practically the same area of oil surface is exposed to the air, and (3) adequate temperature control. To these must, of course, be added, (4) the same weight of oil in each test, (5) the same time of heating, and (6) petroleum spirit of standard composition. It seems desirable that the standard procedure in estimating hard asphalt (p. 360) should be followed in estimating the asphaltenes formed by the heating and oxidation of the oil.

The size of flasks used at the Bureau of Standards was decided upon because it was found that flasks of the dimensions stated formed the majority of those measured in several consignments of different makes. The thickness of glass was not found of any importance. Shallow dishes can be used instead of flasks, but are not recommended by Waters. He found them less convenient than flasks, and if made of metal, catalytic effects due to the metal or its oxide may influence the results.

Garner,[1] whose paper should be consulted in connection with this test, used aluminium dishes heated in an electrically heated oven through which a current of air was drawn by a fan. The evaporation loss was determined by weighing the dishes and oil before and after heating. Garner found that the amount of asphalt formed was dependent on the amount originally present in the oil, that with different oils the proportion of asphalt formed at a given temperature increased with the time of heating much more rapidly than the evaporation loss, and in a given time the amount increased very rapidly with rise of temperature. For similar oils, it was found that the higher the flash-point of the oil, the lower the amount of asphalt formed in a given time at a given temperature.

Waters found in his experiments that the rate of asphalt formation can be expressed by the equation $y=kt^2$, where y is the amount of asphalt formed after heating for time t, and k is a constant for any particular oil at a definite temperature. For the different oils tested, the value of k was found to range from 0·003 to 0·115 and to decrease almost uniformly with rise in flash-point and fire-point.

Garner found that the higher the boiling-point range of the oil, the lower the amount of asphalt formed under the same conditions of heating and temperature, but that impurities present in the oil tested (viz.: asphaltic resins and particles of foreign matter which, as shown by Waters, may be capable of acting as active catalysts in asphalt formation) may be still more important. He concludes that in testing oils by the Waters Method the tempera-

---

[1] *Jour. Inst. Petro. Tech.*, vii. (1921), p. 98.

ture used should approximate to that to which the oil is to be subjected in use. If, however, this is not practicable, the test should be made at a temperature at which, say, 20–40 per cent. of the oil evaporates in four hours (in Garner's tests, the oils were heated for four hours). To comply with this latter condition, the same temperature would not be adequate for all oils, those of higher boiling range requiring a higher temperature than those of lower range. For most oils, suitable temperatures would be 200°, 250°, or 300° C. Reasons for using the same temperature of testing for all oils, as adopted by Waters, are discussed in Circular 99.

When flasks are used, as recommended by Waters, all the loose precipitate which can be removed from the flask by rinsing and by means of a stiff feather, the barbs of which have been cut quite short, are collected on the filter. No attempt is made to remove the "varnish" which adheres to the walls of the flask. This must, however, be removed before the flasks can be used for another test, and to clean the flasks (also new flasks) they are filled with a fairly strong alcoholic solution of caustic soda and allowed to stand for a few hours, which loosens the film. They are then thoroughly washed out with sand and water, finally with clean water, and allowed to drain in an inverted position in holes in a rack until quite dry.

Waters states that the amount of adherent "varnish" formed in a test is quite variable and bears no apparent relation to the amount of precipitate.

2. **Ramsbottom Coking Test.**—This appears to be a modified and improved form of Gray's Carbon Residue Test, in which 25 c.c. of oil was distilled to coking in a silica flask heated by a gas flame.[1] The Ramsbottom test[2] is conducted as follows:—

A glass or silica tube, 1 inch in diameter and $\frac{3}{64}$ inch thickness of wall, closed at one end, is drawn out at the open end to a capillary of $\frac{1}{16}$ inch diameter and $\frac{3}{8}$ inch length, so that the length of the bulb so formed from the base to the shoulder measures $1\frac{1}{2}$ inches, and from the base to the tip of the capillary about $2\frac{1}{4}$ inches. The bulb is weighed and about 5 grms. of oil introduced. The bulb is then placed in an iron sheath, closed at one end, 3 inches long, 1 inch internal diameter, the thickness of wall of which is $\frac{1}{32}$ inch. The sheath and enclosed bulb are immersed in a bath of molten solder or lead and maintained at a temperature of 550° C. The heating is continued until fumes cease to be evolved, and for ten minutes longer; the bulb is then allowed to cool, withdrawn from the sheath, and weighed. The percentage of residue obtained is known as the *coke value* of the oil.

3. **Carbon Residue** (Conradson Coking Test).[3] This test is the Standard Method adopted by the Society of Petroleum Technologists.[4]

Apparatus (see fig. 115).

Method.—The tests shall be conducted as follows:—

10 grms. of the oil to be tested shall be weighed in the porcelain crucible A, which is placed in the iron crucible B. These two crucibles are set in the larger iron crucible C, being careful to have the crucible B set in the centre of the iron crucible, covers being applied to each of the iron crucibles. Place on

---

[1] *Amer. Soc. for Testing Materials*, 1919.

[2] *Lubricating and Allied Oils*, E. A. Evans, 1921, p. 87.

[3] This is a modification by P. H. Conradson of his original method and apparatus for Carbon Test and Ash Residue in Petroleum Oils. See *Proc. Eighth Internat. Congress of Applied Chemistry*, New York, September 1912, vol. i. p. 131; also *J. Ind. and Eng. Chem.*, vol. iv., No. 11, November 1912. It is a Tentative Standard of the American Society for Testing Materials (1925).

[4] *Standard Methods*, 1924, p. 36. Published by the Institution of Petroleum Technologists, London.

triangle and suitable stand with asbestos block, and cover with sheet-iron or asbestos hood in order to distribute the heat uniformly during the process.

Heat from a Bunsen or other burner shall be applied with a high flame surrounding the large crucible C until vapours from the oil begin to ignite over the crucible, when the heat shall be moderated so that the vapours come off at a uniform rate. The flame from the ignited vapours should not extend over 2 inches above the sheet-iron hood. After the vapour ceases to come off, the heat shall be increased as at the start and kept constant for five minutes, making the lower part of large crucible red-hot, after which the apparatus shall be allowed to cool somewhat before the crucible is uncovered. The porcelain crucible is removed, cooled in a desiccator, and weighed.

A. A porcelain or silica crucible, wide form, glazed throughout, 25 to 26 c.c. capacity, 46 mm. diameter.
B. An iron crucible, 45 c.c. capacity, 65 mm. in diameter, 37 to 39 mm. high with cover, the cover being provided with one opening of 5 to 6 mm. diameter.
C. A wrought-iron crucible with cover, about 180 c.c. capacity, 80 mm. diameter, 58 to 60 mm. high. At the bottom of this crucible a layer of sand is placed about 10 mm deep, or enough to bring the inner iron crucible with its cover on nearly to the top of the wrought-iron crucible.
D. Triangle, pipe stem or silica tube covered, projection on side to allow flame to reach the crucible on all sides.
E. Sheet-iron or asbestos hood provided with a chimney about 2 to 2½ inches high, 2⅛ inches in diameter, to distribute the heat uniformly during the process.
F. Asbestos or hollow sheet-iron block, 6 to 7 inches square, 1¼ to 1½ inches high, provided with opening in centre, 3¼ inches in diameter at the bottom, and 3½ inches in diameter at the top.

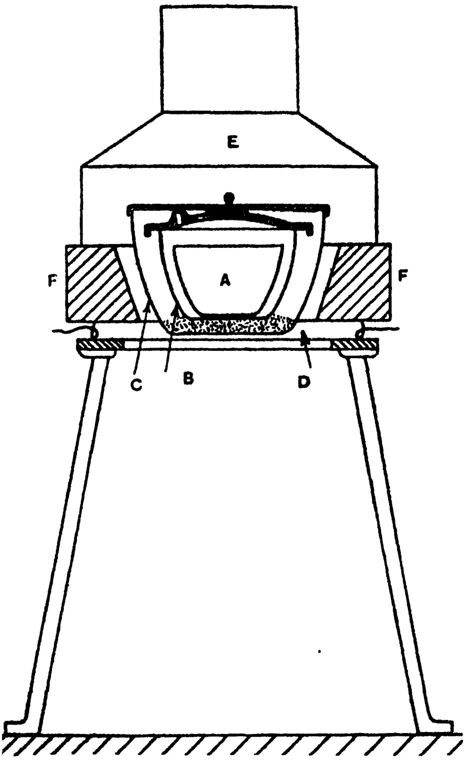

FIG. 115.

The entire process should require one half-hour to complete when heat is properly regulated. The time will depend somewhat upon the kind of oil tested, as a very thin, rather low flash-point oil will not take as long as a heavy, thick, high flash-point oil.

Wilson and Allibone,[1] in their *Studies on Lubricating Oils*, find this test reliable, provided that similar apparatus is always employed. The standard method, as above detailed, does not, they point out, ensure this condition. The description of the outer crucible admits of great variation in the thickness of the metal. Silica and porcelain inner crucibles are found to give different results, the latter being preferred, while the indefiniteness in the dimensions

---

[1] *Jour. Inst. Petro. Tech.*, xi. (1925), pp. 177–190.

of the hood are believed to constitute a further cause of variation. These authors find that, the external crucible being reasonably light and thin, and given uniform apparatus, the test can be conducted quite easily in 30 ± 1 minutes, and under these conditions results can be duplicated with accuracy. They are of opinion, however, that all the dimensions of the several parts of the apparatus should be exactly specified, with only small tolerances. The value and significance of the test remains uncertain, and one would hardly venture to go beyond a statement that in the selection of an oil, other things being equal, the oil having the lowest coking value would be preferred. The test, Wilson and Allibone further remark, is applicable only to comparatively heavy lubricating oils, as in the case of lighter oils the coking values are too low to admit of differentiation.

Other Tests and Remarks.—It has been pointed out by several chemists that coking tests do not always differentiate sufficiently between oils that give very different results in engines as regards the amount of carbonaceous deposit formed, or do not indicate these differences so markedly as oxidation tests. In some cases, the standard sludging test, described in Section R 3, below, has been found to give more useful indications than the coking test or the Waters test. For Diesel engine oils, the coking test is considered of great importance (*Ormandy*). J. B. Hoblyn[1] has proposed a microscopic test. He heats the oil in a crucible in an oil-bath at 250° C. and examines samples of the heated oil at intervals under a magnification of 250 diameters. The progress of decomposition of the oil can be watched, and changes have been observed to take place in oils which have behaved badly in engines much earlier than in oils which have given better results, and to have proceeded more rapidly.

More information is needed concerning the constituents of mineral lubricating oils and their behaviour in engines and in the refining process, as well as in regard to their lubricating value. The refiner in producing an oil which behaves well in the laboratory tests in vogue may remove valuable lubricating constituents. F. B. Thole in his remarks on Hoblyn's paper[1] stated that experiments made in America with a Buick car showed a definite improvement in the power output of the engine as the age of the lubricating oil increased ; only towards the end of a long trial run did it begin to fall off. The addition of fresh oil during the test caused an immediate fall in the power output. H. D. Nickinson in the discussion on the same paper stated that tests made at the National Physical Laboratory on the Lanchester Worm-gear Testing Machine showed that new oil, as used on 'bus engines, and dirty oil from the same engines after six months' run, gave very nearly the same frictional efficiency.

Deposits formed by mineral lubricating oils may undoubtedly be harmful and even dangerous, but caution is needed lest the efforts made to get rid of these troubles (and, we may add, to produce an oil of pleasing colour and appearance) should lead to inefficiency in the lubrication.

R 3.—SLUDGING TEST FOR TRANSFORMER OILS. SLUDGING VALUE.

The test to be described, known as the Michie test, is the Standard Method of the Institution of Petroleum Technologists[2] and the British Engineering Standards Association for determining, approximately, the quantity of sludge

---

[1] *Jour. Inst. Petro. Tech.*, xi. (1925), pp. 1–35.

[2] *Standard Methods*, 1924, pp. 63-65. Published by the Institution of Petroleum Technologists, London.

formed by the oxidation of a mineral oil when hot, and in presence of a metal, conditions which are met with in oil-filled electrical transformers and oil-filled electric switches; also in steam turbines, enclosed steam engines and automobile engines. The test is not recommended by the I.P.T. as a general test for oils other than transformer and switch oils, and it is too cumbersome for the routine testing of mineral lubricating oils. It is, nevertheless, used, and has been found of value by some chemists, as an oxidation test for the lubricating oils used in automobile engines and turbines. Sludging, if severe, is very objectionable in circulation oils, such as those used in turbine lubrication systems, as choking of the oil-ways follows the formation of much sludge; the oil also loses the good demulsibility which is so essential a factor in turbine and enclosed-type steam-engine oils (Dunstan and Clarke [1]).

Apparatus (fig. 116).—1. A round glass flask with bulb 3 inches (76 mm.) diameter, with neck 2¾ inches (70 mm.) long, and 1 inch (25 mm.) diameter.

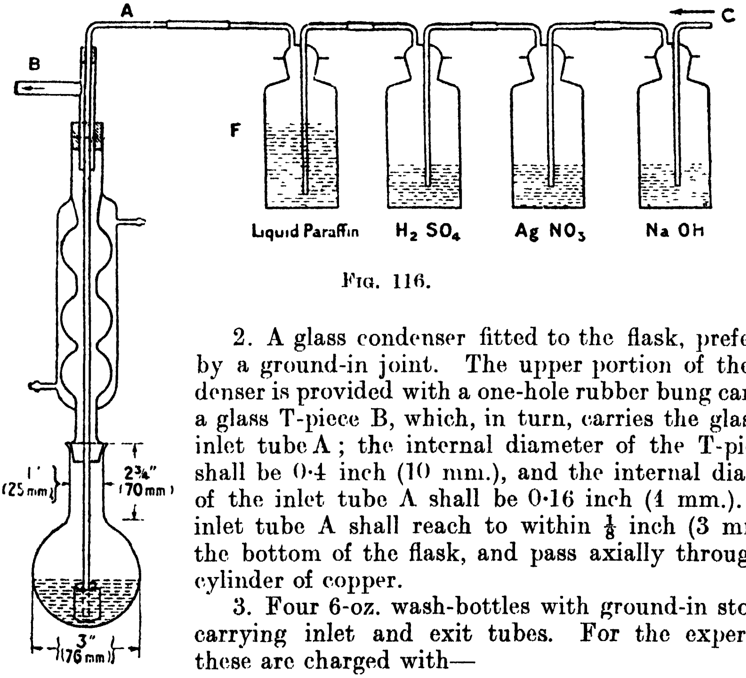

Fig. 116.

2. A glass condenser fitted to the flask, preferably by a ground-in joint. The upper portion of the condenser is provided with a one-hole rubber bung carrying a glass T-piece B, which, in turn, carries the glass air-inlet tube A; the internal diameter of the T-piece B shall be 0·4 inch (10 mm.), and the internal diameter of the inlet tube A shall be 0·16 inch (4 mm.). The inlet tube A shall reach to within ⅛ inch (3 mm.) of the bottom of the flask, and pass axially through the cylinder of copper.

3. Four 6-oz. wash-bottles with ground-in stoppers carrying inlet and exit tubes. For the experiment these are charged with—

(*a*) Liquid paraffin (*paraffinum liquidum*).
(*b*) Sulphuric acid—concentrated.
(*c*) 10 per cent. solution of silver nitrate.
(*d*) Caustic soda solution—sp. gr. about 1·355 (32–33 per cent. NaOH).

In bottles *b*, *c*, *d* the inlet tube shall dip ½ inch (12·5 mm.) below the surface of the reagents.

4. A piece of pure sheet copper having a bright planished surface, and measuring 2 inches by 1¼ inch by 0·004 inch thick (51 mm. by 32 mm. by 0·01 mm.) shall be rolled into a cylinder 1¼ inch (32 mm.) high, so that the edges shall touch. The coiled strip shall stand vertically in the bottom of the flask.

5. The whole of the bulb of the flask shall be immersed in a suitable oil-

---

[1] *Jour. Soc. Chem. Ind.*, xlv. (1926), p. 693.

bath, care being taken that, when the temperature of the oil-bath reaches 150° C. (302° F.), the ground-joint shall be above the surface of the oil, in order to ensure that no leakage of the oil into the test flask can occur.

6. A suitable blower, which will force air through the bottles and contents of the flask at the rate of 0·07 cubic feet (2 litres) per hour.

Method.—The temperature of the oil-bath shall be brought to 150° C. (302° F.) and maintained at this temperature throughout the test. 100 c.c. of the oil shall be measured into the flask, and the sheet copper cylinder placed so that it stands vertically around the air-inlet tube. The apparatus shall be connected up in the manner illustrated in fig. 116, with the flask immersed in the oil-bath so that the ground joint is above the level of the oil in the bath. Air shall be bubbled through the apparatus, entering at C, at the rate of 0·07 cubic feet (2 litres) per hour, during the whole period of the test.

After forty-five hours' treatment, the flask shall be removed from the oil-bath and allowed to cool below 100° C. (212° F.). The contents shall then be transferred to a beaker, diluted with three times its volume of petroleum spirit, and allowed to stand overnight for the sludge to separate out. Any deposit remaining in the flask shall be removed mechanically, and by washing with petroleum spirit if necessary, and added to the sludge in the beaker.[1] The petroleum spirit used shall be free from aromatic hydrocarbons and have a specific gravity of 0·70 to 0·72 at 15·5° C. (60° F.). Not less than 75 per cent. by volume shall distil over below 110° C. (230° F.), and the final boiling-point shall not exceed 150° C. (302° F.).

The liquid shall then be decanted through a filter paper, and the deposit washed on to the filter paper by means of petroleum spirit. The deposit on the filter paper shall be thoroughly washed with petroleum spirit until free from oil and dried at 100° C. (212° F.) and dissolved in hot benzol and the solution collected in a tared flask. The solvent shall then be evaporated off on a water bath and the residue weighed. In the event of the deposit being large, the bulk of it shall be detached from the filter paper, crushed and redried at 100° C. (212° F.), and then weighed. Any traces of deposit which adhere to the paper shall be removed by means of hot benzol and its weight obtained as above. The result is expressed as a percentage, thus :—

$$\text{Percentage of Sludge} = \frac{\text{Weight of deposit in grams}}{\text{Specific gravity of the oil}}.$$

Wilson and Allibone in their *Studies on Lubricating Oils*[2] have criticised this test rather severely. It must, however, be recognised that it is a purely arbitrary test, and to ensure concordant results needs most careful attention to the instructions in every detail. What is needed is a scientific investigation into the causes of sludge formation. Until this has been made, arbitrary tests must suffice. It seems most desirable that the test should be modified in such a way that results can be obtained in the course of a working day, forty-five hours being much too long for ensurance of the specified conditions operating throughout the whole of the period of test.

S.—SPONTANEOUS IGNITION OF OILY MATERIALS.

It is well known that oily rags, oily cotton waste and similar materials are liable to heat and take fire spontaneously, and that numerous fires have originated in this way; a brief discussion of this subject is, therefore, of some

---

[1] The beaker, presumably, shall be covered.

[2] *Jour. Inst. Petro. Tech.*, xi. (1925), pp. 177–190.

importance to users of lubricants. It may be stated, however, at once, that danger from spontaneous ignition at ordinary temperatures arises only when the oils concerned are fatty oils, principally seed oils, and not when pure mineral oils are concerned.

The oxidation of oils is a process in which heat is always evolved. but, under ordinary circumstances, the temperature of the oil is not sensibly raised, because the heat, which is evolved slowly, is conducted away as fast as it is liberated. When the rapidity of oxidation is increased by blowing air through a large mass of oil, as in the manufacture of thickened or " blown " oils, the temperature rises considerably. Conditions most favourable for the generation of heat by oxidation present themselves when a fibrous substance like cotton is saturated with a fatty oil and thrown together in a heap, especially in a warm place. Under these conditions the oil, spread out in thin films on the cotton fibres, presents a large surface for oxidation, and the heat being prevented from escaping, owing chiefly to the absence of convection currents, raises the temperature of the mass and thereby promotes more vigorous oxidation, which leads to further and more rapid development of heat, until finally the temperature of ignition of the mass may be reached and it bursts into flame.

The subject has been experimentally investigated by Gellatly, Coleman, Young, and many others, by saturating balls of waste fibre with various oils, placing them in a chamber heated to 212° F. or some lower temperature, and noting the time taken by the mass to inflame. The results obtained have shown that the drying oils, such as linseed, and specially boiled linseed oil, cause ignition most readily, and the non-drying oils least readily; but all drying and semi-drying oils, and even such non-drying oils as olive and lard oil, are capable of causing ignition sooner or later under the conditions named. Mackey has shown by experiments with olive and cottonseed oils[1] that the free fatty acids prepared from these oils are more liable to develop heat and eventually to fire when spread on cotton than the neutral oils themselves,[2] a fact which he considers of importance in relation to fire risks in woollen mills, as recovered cloth-oils and distilled oleines consist largely of free fatty acids. In the experiments recorded in Table CXXXI. (p. 372) it will be noticed, however, that commercial " oleine " and " 97 per cent. oleine " heated no more than neutral olive oil.[3] According to Kissling,[4] the generation of heat is influenced to a considerable extent by the nature of the fibrous material, being most rapid with silk, and less, in order, with animal wool, cotton-wool, jute, and hemp.

In practice, the risk of fire arising from spontaneous ignition of oily material is greater the more readily oxidisable the oil, and therefore, generally, the higher the iodine value of the oil and the greater the evolution of heat in Maumené's thermal test. Mineral oils, which are practically incapable of oxidation at ordinary atmospheric temperatures, do not heat at all; not only are they, therefore, free from the danger of spontaneous ignition, but when mixed with fatty oils in sufficient proportion, which varies according to the nature of the fatty oil, they prevent the risk of fire arising from the spontaneous ignition of the mixture. Given a sufficiently high flash-point, not below 340°–350° F. (171°–177° C.), *closed test*, the more mineral oil there is in a mixed lubricant the safer the oil as regards the liability to cause a fire; nevertheless, the fire insurance companies consider the fire-risk in textile and woollen mills

---

[1] *Jour. Soc. Chem. Ind.*, xiii. (1894), p. 1164.

[2] The difference has to do with the chemical action of the fatty acids on the cotton, as it was not observed when an inorganic material like slag wool was substituted for the cotton.

[3] Compare Richardson and Jaffé, *Jour. Soc. Chem. Ind.*, 1905, p. 534.

[4] *Jour. Soc. Chem. Ind.* xiv. (1895), p. 479.

greater the higher the percentage of "unsaponifiable matter"[1] in the oil used. This is chiefly owing to the fact that when a fire has once broken out, mineral oils, which, as a rule, flash at a lower temperature than the vegetable oils, are more likely to assist in spreading the fire in proportion to the difference of flash-point (*Mackey*).

Both in the United States and in this country apparatus has been devised specially for the purpose of determining the relative liability of oils to cause spontaneous ignition.

Allbright and Clark's Apparatus,[2] generally known as Ordway's, consists of a double chamber, formed by two tubes placed one inside the other. The outer tube is of wrought iron, 6 inches in diameter, and is closed at each end by discs of wood. The inner tube is of sheet iron, 4 inches in diameter, and 6 inches shorter than the outer tube, and is fitted with overlapping metal covers at each end, which support it centrally within the outer tube, leaving an annular air-space of 1 inch between the two tubes and a space of 3 inches at each end. The apparatus, suitably supported, is heated by a Bunsen burner, and three thermometers, which are inserted into the inner tube through the outer, allow the temperature to be read off.

50 grms. of the oil to be tested are distributed as evenly as possible over 50 grms. of cotton waste, which is then carefully pushed into one end of the inner tube, and a second similar ball of unoiled waste is inserted into the other end. One thermometer is placed with its bulb in the ball of oiled waste, one in the ball of unoiled waste, and the third midway between the two. The outer tube is then heated so that the thermometer in the unoiled waste indicates 100°-101° C., not higher, the maintenance of this temperature being controlled by means of the middle thermometer, which should be kept at about 125° C. Spontaneous heating of the oiled waste is indicated by the temperature of the mass rising above that of the unoiled waste, and the difference of temperature will be greater, and the rise more rapid, the more dangerous the oil.

Richards states that this apparatus has been of the greatest use in determining the cause of fires and in estimating the relative safety of oils for use in textile mills. Among other results it has been found that the proportions of neatsfoot and best lard oils which can safely be mixed with mineral oil amounts to from 50 to 60 per cent., whilst not more than 25 per cent. of cottonseed oil can be safely added. That is to say, cotton waste oiled with a mixture of 50 per cent. lard oil and 50 per cent. mineral oil would not be liable to ignite spontaneously, but if the lard oil were adulterated with cottonseed oil, ignition might occur. In either case, a good deal would depend upon the size of the heap of waste and the temperature of the surrounding air.

Mackey's "Cloth-Oil Tester" (fig. 117)[3] consists of a cylindrical copper water-bath tinned on the inside, measuring externally 8 inches high by 6 inches in diameter, and internally 7 inches high by 4 inches in diameter, provided with a lid having a short central tube D for a thermometer and two longer tubes A and B for promoting the circulation of air. A cylinder of 24-mesh wire gauze C, 6 inches long by 1½ inches in diameter, contains the oiled wool.

14 grms. of the oil to be tested are weighed into a shallow dish containing 7 grms. of pure cotton wool, and after thoroughly incorporating the oil by

---

[1] Both Mackey and Lewkowitsch have pointed out the fallacy of assuming the "unsaponifiable matter" to consist, necessarily, of mineral oil, since in recovered wool grease, for example, it may be composed entirely of cholesterols, and should therefore be examined as described in Chap. VIII. p. 307. In distilled wool grease, however, hydrocarbons occur, which, though not "mineral oil," are undistinguishable from it, and, as regards fire-risk, may be regarded as identical.

[2] Richards, *Jour. Soc. Chem. Ind.*, xi. (1892), p. 547.

[3] *Jour. Soc. Chem. Ind.*, xiv. (1895), p. 940; and xv. (1896), p. 90.

hand with the well-teased wool, which cannot be too carefully done, as the success of the experiment greatly depends upon the even distribution of the oil, the thermometer is held upright in the middle of the gauze cylinder and the oiled wool is carefully and uniformly packed around it. Having raised the water in the outer jacket to active ebullition, the cylinder and thermometer are placed in the inner chamber, the lid is carefully slipped down over the thermometer stem, and the latter is fixed in position by tightening up the screw-clamp D. The position of the thermometer should be such that the red mark on the stem is just visible above D. The water in the jacket is kept steadily boiling, care being taken that steam is neither drawn down the tube B nor warms the tube A, and the temperature of the wool is read off at intervals.

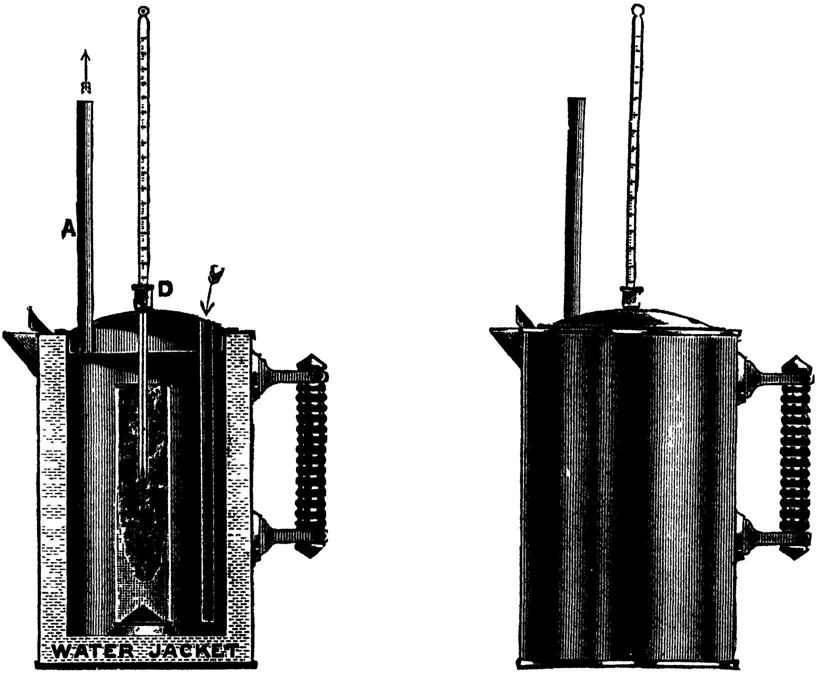

FIG. 117.

It usually takes about one hour for the oiled wool to reach the temperature of the bath (100° C. =212° F.), and safe oils, like pure olive oil, will not rise much higher; but dangerous oils will continue to heat, and very dangerous oils, such as cottonseed, will rise to 200° C. (392° F.) within one hour and a half. Generally the temperature, after a certain point is reached, commences to rise very rapidly, and when this is the case the thermometer must be withdrawn after reaching, say, 250° C.—otherwise it may be damaged. Mackey states that any oil which, when tested in this way, reaches 200° C. in two hours, may be regarded as too dangerous for use in mills. The worst class of oil, from a fire insurance point of view, will heat more rapidly than this.

Everyone using the apparatus for the first time should experiment with pure olive and cottonseed oils, comparing his results with those in the following table by Mackey, until he has found how to prepare and pack the mixture of wool and oil so as to obtain similar results:—

TABLE CXXXI.

No.	Oil used.	Temperature in				Maximum.		
		1 hr.	1 hr. 15 m	1 hr. 30 m.	2 hrs.			
		°C.=°F.	°C=°F.	°C.=°F	°C.=°F.	°C.=°F.	H.	M.
1	Cottonseed, ...	125=257	242=468	..	.	242=468	1	15
2	" . . .	121=250	242=468	282=540	..	284=543	1	35
3	"	128=262	212=414	225=437	..	225=437	1	30
4	"	124=255	210=410	.	..	248=478	1	35
5	"	116=241	192=378	200=392	..	200=392	1	30
6	" . .	118 244	191=376	202 396	.	202=396	1	30
7	"	117=243	190=374	194=381	.	194=381	1	30
8	"	112=234	177=351	204=399	.	211=412	1	45
9	Olive fatty acids, . . .	114=237	177=351	..	.	196=385	1	25
10	" " . . .	105=221	165=329	..	.	203=559	1	55
11	" " . . .	102=216	135=275	208=406	.	226=439	1	45
12	White Australian oleine, .	103=217	115=239	191=376	..	230=446	1	45
13	Olive (containing 1 % free fatty acids),	98=208	102=216	104=219	..	241=466	3	25
14	Oleine, ...	98=208	101=214	102=216	..	110=230	2	8
15	97% oleine, ...	98=208	100=212	102=216	..	172=342	3	15
16	Belgian oleine, . . .	98=208	99=210	100=212	..	173=543	3	16
17	Olive (neutral), . . .	98=208	100=212	101=214	..	235=455	5	15
18	" ("), . . .	97=207	100=212	101=214	..	228=442	4	30
19	" ("), . . .	97=207	..	101=214	..	235=455	4	55
20	Cotton, ...	139=282	..	..		200=392	1	4
21	Olive, ...	99=210	101=214	102=216	103=217	113=235	4	30
22	{Mixture of 50% of No. 20 and 50% of No. 21}	102=216	117=243	..	..	200=392	1	29
23	{Mixture of 25% of No. 20 and 75% of No 21}	99=210	105=221	112=234	..	200=392	1	52
24	{Mixture of 10% of No. 20 and 90% of No. 21}	99=210	102=216	105=221	127=261	200=392	2	9

The following results with the same sample of pure cottonseed oil were obtained on first using one of Mackey's testers:—

Experiment Number.	Temperature (° C.) after the Expiration of *Minutes*.							
	60	75	81	84	90	92	105	109
1	100°	122°	200°	250°	...	...	...	...
2	99°	102°	...	...	107°	...	165°	250°
3	100°	111°	...	...	225°	250°	...	...
4	102°	125°	...	...	250°	...	...	...
5	101°	120°	...	...	250°	...	...	...

In experiment No. 2 the temperature did not at first rise so rapidly as in the others, but it shot up rapidly after a time, and reached 250° in about 1¾ hours. In this experiment, the wool was teased out with perhaps over-extreme care; in the last two experiments less care was taken.

An observation may here be mentioned which, though not strictly bearing on lubricants, is of importance to users of this apparatus. Some linseed oil varnish containing 58 per cent. of oil of turpentine, which was believed to have caused a fire, was being tested, but at first no heating effect could be obtained. The temperature of the mixture of 14 grms. of varnish and 7 grms. of wool rose to 100° in twenty-eight minutes, but remained stationary at 105° for two hours. Every attempt to obtain a different result failed. 14 grms. of a mixture of cottonseed oil and turpentine in the same proportions failed to rise higher than 142° C. in 150 minutes, and 33 grms. of the same mixture (containing 14 grms. of cottonseed oil) did not rise beyond 103°.

It became evident that the heavy turpentine vapour filling the inner chamber prevented access of sufficient air to maintain the oxidation. The air-inlet tube B was therefore connected up to an air-supply tap, and a current of air (2 litres per minute) was forced through the apparatus. Repeating the experiment under these conditions, the 33 grms. of the cottonseed oil and turpentine mixture rose to 182° in two hours and to 250° in 123 minutes, and the sample of varnish (containing linseed oil and turpentine) reached 100° C. in eighteen minutes and shot up to 250° in thirty-eight minutes.

Since making these observations, we have made a practice of forcing a current of air through the apparatus in testing all oils, and we find the results more regular and reliable. We have also improved the apparatus by replacing the spout shown in the figure by a tube which can be connected to a reflux condenser. This prevents the water in the jacket from boiling to dryness, an event which otherwise is not unlikely to occur.

T.—ESTIMATION OF PARAFFIN IN MINERAL OILS.

The following method[1] is due to Holde (after *Engler* and *Böhm*):

10 to 20 c.c. of oils poor in paraffin (Russian distillates, American asphaltic-base oils, etc., having a cold test below 0° C.), or 5 grms. of such as are rich in that constituent (American and other paraffin base oils) are treated, at the ordinary temperature, with a mixture of absolute ethyl alcohol and anhydrous ethyl ether (1 : 1) until a clear solution is obtained. The liquid is cooled in a freezing mixture of ice and salt to about −20° to −21° C., when more alcohol-ether is gradually added, with thorough agitation, until no oily drops, but only solid paraffin flakes or crystals, remain in suspension, and then, whilst still cooled to at least −19° to −21° C., the liquid is poured on to a chilled 9-cm. filter paper, previously moistened with the alcohol-ether mixture, which is contained in the apparatus shown in fig. 118. The precipitate is washed with cold (−19° to −21° C.) alcohol-ether (1 : 1 ; or for soft paraffin 2 : 1) at a temperature as much below −15° C. as possible. In the case of soft paraffin, the temperature should average −18° to −19° at the highest. In washing the precipitate it is repeatedly stirred up, and as soon as 5–10 c.c. of the filtrate leaves on evaporation only a trace of fatty or paraffin-like residue, solid and not oily at the ordinary temperature, the washing is discontinued. If any doubt exists as to the paraffin being thoroughly freed from oil, or if the washing takes too long, the filter should be removed to another funnel, and the contents dissolved into a small flask with the least possible quantity of benzol. After evaporation of the benzol, the paraffin is redissolved in 4 to 5 c.c. of warm ether, which is then mixed with twice its volume of absolute alcohol, vigorously stirred, and cooled to −18° to −20° to reprecipitate the paraffin, which is again filtered and washed, as already described,

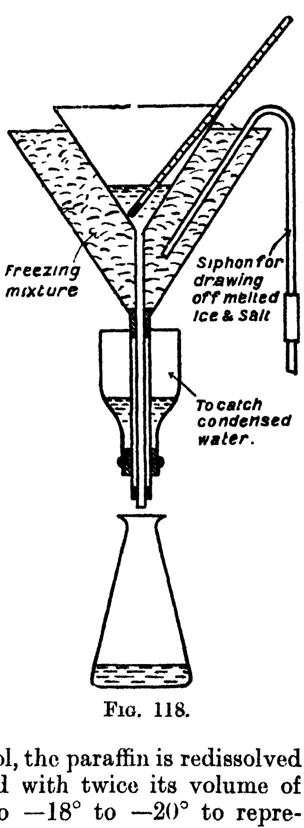

FIG. 118.

---

[1] *Jour. Soc. Chem. Ind.*, xvi. (1897), p. 362. For later particulars see Holde, *Kohlenwasserstofföle und Fette*, 1924, p. 108.

until free from oil. This reprecipitation is necessary for oils containing much soft paraffin, otherwise so much liquid is used in washing the precipitate that an appreciable quantity of paraffin is dissolved. The purified paraffin is finally dissolved into a tared flask with hot benzol or ether, which is distilled off, and the residue is heated on the steam-bath until the smell of benzol or ether has disappeared. The flask is then heated inside the water-oven for a quarter of an hour and weighed when cold. Prolonged heating causes loss of paraffin. The whole operation occupies from one to two hours. Duplicate results with the same sample agree within 0·23 per cent. for hard paraffin and 0·33 per cent. for soft paraffin. Two samples of Russian machine oil yielded 0·34 per cent. and 0·36 per cent. of paraffin, respectively. An American spindle oil, fluid but thick at +2° C., and which set at 0° C., was found to contain 4·11 per cent. of paraffin.

U.—DETECTION AND ESTIMATION OF ROSIN OIL IN MINERAL (UNSAPONIFIABLE) OIL.

(*a*) **The Liebermann-Storch Colour Test.** (See p. 351.)

(*b*) **The Acetone Test.**—According to Demski and Morawski,[1] rosin oils mix with acetone in nearly all proportions, whilst mineral oils require several times their volume of acetone to effect complete solution.[2] If, therefore, an unsaponifiable oil which gives the Liebermann-Storch reaction gives also a clear solution with an equal volume of acetone, it is either a pure rosin oil or a mixture of this with very little mineral oil; if an insoluble residue remain, it consists of mineral oil. Wiederhold,[3] who has proposed the same test, states that the acetone must be dry and free from acid, but that the presence of aldehyde is of no importance. The difference between the solubility of rosin oil in moist and in dry acetone is very considerable. Rosin oil will dissolve in half its volume of *dry* acetone at 15° C.

(*c*) **Finkener's Test.**—Finkener [4] has proposed the use of a solvent prepared by mixing at 15·5° C., 10 volumes of alcohol of sp. gr. 0·8182 with one volume of chloroform. Rosin oil dissolves in from 10 to 12 volumes of this mixture at 23° C., whilst mineral oils are not completely soluble even in 100 volumes. Occasionally, rosin oil is met with which, when dissolved in 10 volumes of the mixture and allowed to stand for several hours at 23° C., deposits an oily sediment amounting to from 3 to 7 per cent. of the rosin oil taken; but if 12½ volumes of the mixture be used instead of 10 volumes, any insoluble residue then obtained may be assumed to be mineral oil. Wiederhold [3] considers that the necessity of working at 23° C. renders the above test impracticable, and he states that if 16 volumes of the chloroformic alcohol be used the test may be made at a temperature of 15° C.

(*d*) **Refractive Index.**—Holde [5] gives the following as the refractive indices at about 18° C.:—Rosin oils, 1·535–1·550; Mineral lubricating oils, 1·475–1·517.

(*e*) **Polarimetric Test.**—According to Valenta, most rosin oils are strongly dextro-rotatory, the rotation in Mitscherlich's polarimeter ranging from 30° to 40° in a 100 mm. tube. Demski and Morawski observed a rotation of about

---

[1] *Dingl. polyt. Jour.*, cclviii. p. 82.

[2] Borneo mineral oil of sp. gr. 0·97 to 0·99 is readily soluble in an equal volume of acetone. It does not, however, give the Liebermann-Storch reaction (Jenkins, *Analyst*, 1902, p. 240).

[3] *Jour. Prakt. Chem.* **47** (1893), 394.

[4] *Zeit. für. Analyt. Chem.*, 1887, p. 652.

[5] *Untersuchung der Mineralöle und Fette* (1909), p. 171.

50°. The rotation of seven samples examined by Pelgry at the Charlottenburg Versuchsanstalt varied from 32° to 42°.[1] On the other hand, pure mineral oils are either optically inactive or possess only a very small optical activity, which may be positive or negative.[2] Dark-coloured oils must be decolourised by filtration through animal charcoal.

(*f*) **Estimation of Rosin Oil by Valenta's Method.**[3]—Glacial acetic acid at 50° C. dissolves rosin oil much more freely than mineral lubricating oil. Thus, Valenta found that 100 grms. of glacial acetic acid dissolved at 50° C., from ten different samples of mineral oil experimented with, quantities ranging from 2·67 to 6·50 grms.; whilst the same quantity of glacial acetic acid dissolved 16·88 grms. of rosin oil. Walker and Robertshaw[4] similarly found the solubility of a sample of mineral oil in 100 grms. of glacial acetic acid to be 4·4 grms., and of two samples of rosin oil to be, respectively, 16·8 and 16·6 grms., thus confirming Valenta's figures. Upon this difference of solubility Valenta has based the following test:—

2 c.c. of the suspected oil are mixed in a test-tube with 10 c.c. of glacial acetic acid; the tube is immersed in water at 50° C. and frequently agitated. The acid is then filtered through a damp filter, the second third of the filtrate being collected. A weighed quantity of this is titrated with standard alkali, and the amount of acetic acid calculated. The difference between this weight and that of the quantity taken is the amount of oil dissolved.

Valenta found that the solubility of a mixture of rosin oil and mineral oil was not proportional to the relative quantities of each in the mixture, and, therefore, he did not consider the above a quantitative method. On the other hand, Walker and Robertshaw found that a mixture of equal weights of mineral oil and rosin oil gave 10·84 per cent. of dissolved oil, theory requiring 10·59 per cent. They, therefore, consider this the best method of analysing quantitatively a mixture of mineral oil and rosin oil. Allen has pointed out that errors would be caused by the presence of rosin acids in the rosin oil. He proposed, therefore, to neutralise the greater part of the acetic acid with alkali, dilute with water, and extract the rosin and mineral oil with ether. Probably the best method of procedure in all cases would be first of all to saponify, extract, and weigh the unsaponifiable matter (thus freed from rosin acids), and examine this by Valenta's method. The rosin acids, together with fatty acids from any fatty oil present, could be recovered from the soap solution and separately estimated.

(*g*) **Estimation of Rosin Oil by Storch's Method.**[5]—According to Storch, rosin oil mixes with absolute alcohol in all proportions, but the presence of a comparatively small proportion of water greatly reduces the solubility. Thus, 96 per cent. alcohol dissolves from 11·3 to 16·2 per cent. of rosin oil, whilst 90 per cent. alcohol dissolves only from 2·6 to 4·0 per cent. Mineral oil, on the other hand, is much less soluble than rosin oil. Upon this difference of solubility, Storch has based the following method for the determination of rosin oil when mixed with mineral oil:—

10 grms. of the unsaponifiable oil, which has been proved by the foregoing tests to contain rosin oil, are gently warmed with 50 grms. of 96 per cent. alcohol (sp. gr. 0·8123), then well shaken and allowed to cool. All the rosin oil, even if 50 per cent. be present, will now be dissolved in the alcohol, together with some of the mineral oil. The alcoholic solution having been carefully

---

[1] Holde, *Die Untersuchung der Schmiermittel* (1897), p. 118.

[2] See Lewkowitsch, *Oils, Fats, and Waxes*, iii. (1923), p. 86.

[3] *Dingl. polyt. Jour.*, 1884, p. 418.

[4] *Analyst*, 1902, p. 238.

[5] *Jour. Soc. Chem. Ind.*, vii. (1888), p. 136; *Analyst*, xiii. (1888), p. 71.

drawn off with a fine pipette and transferred to a small Erlenmeyer flask about 7 cm. high, the surface (only) of the undissolved mineral oil is rinsed with a few c.c. of 90 per cent. alcohol, which is also transferred to the flask. The latter is then placed on a water-bath, surrounded by a bottomless beaker, and the alcohol is gently boiled off. When the residual oil is free from bubbles, it is cooled and weighed (*Residue A*). Storch has proved that by evaporating off the spirit in this way the loss of rosin oil is imperceptible; if a beaker be used it is greater, though very small; but in a basin a large loss occurs. Residue *A* is next warmed and shaken, exactly as before, with ten times its weight of 96 per cent. alcohol—*i.e.* with just enough to dissolve it if pure rosin oil, andt he solution is again evaporated and the residue weighed (*Residue B*). Both residues contained the whole of the rosin oil plus as much mineral oil as the alcohol used could dissolve; but, as in the second extraction less alcohol was used than in the first, an insoluble residue remained, consisting of the mineral oil dissolved by the difference between the two quantities of spirit employed. Knowing the weight of this residue (=wt. of *A* — wt. of *B*) and the weight of the alcohol in which it was dissolved, the solubility of the mineral oil can be calculated. The weight of mineral oil in residue *B* is thus found, and the difference is the weight of rosin oil in the 10 grms. of oil taken. Storch found by experiment that this result is a little below the truth, and that the correct result is more nearly the mean between this figure and the weight of residue *B*.

EXAMPLE.

11·22 grms. of mineral oil containing 10 per cent. of rosin oil were taken.

		Grms.		Grms
1st Extraction, . .	Alcohol used,	50·0	Residue *A*,	1·5136
2nd „ . .	„	15·5	„ *B*,	1·1584
Differences, . .	Alcohol,	34·5	Mineral oil,	0·3552

Therefore, 34·5 grms. of alcohol dissolved 0·3552 grm. of mineral oil, and therefore 15·5 grms. of alcohol dissolved 0·1595 grm. of mineral oil.

Deducting 0·1595 grm. from the weight of residue *B* leaves 0·9989 grm., or 8·90 per cent. of rosin oil. Residue *B* without this correction is equivalent to 10·32 per cent. The mean value is 9·60 per cent., which is not far from the truth.

(*h*) **Estimation by M'Ilhiney's Method.**[1]—This method depends upon the fact that nitric acid, when heated with rosin oil, converts it into a brittle red resin, whilst mineral oil is not much affected. The red resin is insoluble in petroleum ether, in which the mineral oil easily dissolves.

50 c.c. of nitric acid (sp. gr. 1·2) are heated to boiling in a flask of 700 c.c. capacity. The flame is removed and 5 grms. of the oil are dropped in. The flask is then heated on the water-bath, with frequent shaking for fifteen to twenty minutes; about 400 c.c. of cold water are added, and the fluid is made quite cold. The unchanged mineral oil is then dissolved by shaking with petroleum ether, which is separated and distilled off in the usual manner, and the residual oil is weighed. As mineral oils lose about 10 per cent. when thus treated, the weight obtained, divided by 0·9, gives the amount of mineral oil in the quantity of oil taken. A mixture consisting of 76 per cent. mineral oil and 24 per cent. rosin oil gave, by this method, 76·8 per cent. of mineral oil.

---

[1] *Jour. Amer. Chem. Soc.*, xvi. (1895), p. 385.

U 1.—DETECTION AND ESTIMATION OF TAR OIL IN MINERAL (UNSAPONIFIABLE) OIL.

Valenta's Dimethyl Sulphate Test.[1]—This test is based upon the observation that dimethyl sulphate is miscible with coal-tar hydrocarbons in all proportions at room temperatures, but does not mix with petroleum hydrocarbons in the cold. In making the test, a measured volume of the oil is taken in a graduated cylinder, 1½ volumes of dimethyl sulphate are added, shaken for one minute, and allowed to stand until separation has taken place. The increase of volume of the dimethyl sulphate layer is stated by Valenta to be a measure of the tar oils present in the volume of oil taken for the test.

This test has been critically investigated by Harrison and Perkin,[2] who conclude that as a quantitative method it cannot be recommended, but that as a qualitative test it is of use. These authors state that when dimethyl sulphate is shaken with hydrocarbons of the aromatic series mixed with mineral oil, the bulk of the aromatic oil is dissolved and, in most cases, only a small quantity of the mineral oil. If the dimethyl sulphate layer be saponified with alcoholic potash, on diluting with water and extracting with ether, the hydrocarbon oil, mixed with only a small proportion of mineral oil, is obtained, and can be tested to prove whether or not it is an aromatic oil. The fact that dimethyl sulphate dissolves a portion of an oil is no proof that the dissolved portion is an aromatic hydrocarbon. It is, therefore, necessary to saponify and employ additional tests.

V.—CAOUTCHOUC IN MINERAL OIL.

Caoutchouc is sometimes dissolved in mineral lubricating oils to produce a factitious viscosity. In a case investigated by Holde,[3] 2 per cent. of caoutchouc was found to have increased the viscosity of an oil from 21·2 to 117 (*Engler*). The adulterated oil was of an adhesive or tacky nature, pulling up in threads when touched. Tested in a Martens' machine, the coefficient of friction was found to be so high, and the rise of temperature of the bearing so rapid, as to condemn the oil as a lubricant. By dissolving the oil in a mixture of alcohol, 3 parts, and ether, 4 parts, the caoutchouc was left insoluble, and the amount present was determined by collecting the insoluble flakes, washing, drying, and weighing them.

W.—DETECTION OF SOAP AND INORGANIC SUBSTANCES IN MINERAL OILS AND GREASES.

For the detection of soap in lubricants, the determination of ash is a valuable guide (see p. 378). As a further test, about 0·5 c.c. of the sample may be shaken with 5–10 c.c. of petroleum spirit (redistilled below 75° C.), until dissolved or thoroughly disintegrated. Two cases then present themselves:—

(*a*) *A clear solution is obtained.* Add 1 c.c. of Schweitzer and Lungwitz's reagent (a saturated solution of metaphosphoric acid in absolute alcohol, made by shaking excess of the powdered acid with alcohol in a stoppered bottle).[4] If soap be present, even in traces, a flocculent precipitate will be produced.

---

[1] *Chem. Zeit.*, **30** (1906), 266.

[2] *Analyst*, xxxiii. (1908), p. 2.

[3] *Untersuchung der Mineralöle und Fette*, p. 174; see also Holde's *Kohlenwasserstofföle und Fette*, 1924, pp. 277–279.

[4] *Jour. Soc. Chem. Ind.*, xiii. (1894), p. 1178.

This test was specially devised for the detection of small quantities of aluminium soap (" viscom," " gelatin ") which are sometimes added to mineral oils to produce a factitious viscosity. The reaction depends upon the fact that whilst free metaphosphoric acid is soluble in alcohol and in ether, aluminium metaphosphate and the metaphosphates of the alkalies and alkaline earths are insoluble. The authors of the test have proved by experiments with a large number of fatty oils and fats, mineral oils, rosin oil, petroleum jelly, etc., that if no soap be present no precipitate is obtained in twenty-four hours. Some waxes, however, also ozokerite, are precipitated from their solutions in petroleum spirit by absolute alcohol; therefore, if pure absolute alcohol (free from phosphoric acid) be found to give a precipitate, the test must be repeated, using ordinary ether as the solvent and a solution of metaphosphoric acid in ether as the reagent.

(*b*) *An insoluble residue remains.*—Dissolve, if necessary, a larger quantity of the substance in more petroleum spirit, filter through a small filter paper, and wash with petroleum spirit until all soluble oily matter is removed. Then drive off the petroleum spirit by evaporation, transfer some of the dry residue to a small test-tube, and heat it with dilute hydrochloric acid. Soap, if present, will be decomposed, and the fatty acids set free will be seen floating on the liquid, either while hot or after cooling. If the result be uncertain, shake the cold liquid with a little ether, draw off the ether with a pipette, and evaporate it in a watch-glass to detect the fatty acid, which will crystallise on solidification. Rosin would be recognised by its physical characters. The base of the soap, whether aluminium, calcium, sodium, lead, etc., may be detected by pouring the acid solution through a wet filter and applying the usual tests.

Another portion of the residue insoluble in petroleum spirit may be burnt in a small platinum dish or porcelain crucible. If no ash remain, the insoluble matter was free from soap. If soap be present, an ash consisting of the carbonate or oxide of the metallic base will be obtained.

The residue insoluble in petroleum spirit may contain, besides soap, other substances, such as graphite, soapstone, chalk, lime, barytes, starch, etc.

Graphite would be recognised by its blackness and lustre. It would be difficult to burn, requiring a high temperature or a stream of oxygen. *Soapstone* and *barytes* would not dissolve in dilute hydrochloric acid, and could be filtered off and identified by the usual qualitative tests. *Free lime* would give a red colour with phenolphthalein; *chalk* would not, but would effervesce on adding acid. *Starch* would be detected by the blue colour with iodine.

X.—ESTIMATION OF ASH.

The ash of any oil or fat free from water may be estimated by weighing 10 grms. in a tared platinum dish, placing the dish at the mouth of a gas muffle heated to dull redness, and, as soon as the oil begins to smoke, igniting it with a match. The dish is then placed in such a position that the oil will burn quietly away, most of the smoke being drawn into the muffle (which is perforated at the back). When nothing but a charred mass remains, the dish is placed inside the muffle until the carbon is completely burnt off, then carefully removed to a desiccator to cool, and weighed. The particles of ash are often very light, and may easily be carried away by currents of air.

In 22 samples of mineral lubricating oil examined by Archbutt, mostly dark-coloured machinery oils for railway work, the percentages of ash were: *maximum*, 0·055; *minimum*, 0·002; *average*, 0·015. In 36 samples of dark cylinder oil, the following percentages were found: *maximum*, 0·080; *minimum*, 0·002; *average*, 0·025. These ashes were generally red in colour and probably consisted largely of oxide of iron from the still. Pale, refined, mineral oils should leave no weighable amount of ash. If an appreciable amount of alkaline ash be found in a pale mineral oil, the oil probably contains sodium sulphate or dissolved petroleum soap, due to imperfect washing, or an aluminium soap (" viscom," " gelatin ") may have been added to produce a factitious viscosity; in that case the ash will consist, chiefly, of alumina.

Pure fatty oils and fats leave mere traces of ash, bone fat, which contains lime, being an exception.

Soap-thickened greases which contain water should first be heated over a very small flame and stirred with a platinum rod until all the water has evaporated. The dish, and the rod which should have been weighed with it, are then placed in the mouth of the muffle and treated as above directed. In the presence of soap, more or less considerable quantities of ash will be obtained, consisting of calcium or sodium carbonates, etc., etc., according to the nature of the soap.

Y.—DETECTION OF NITROBENZENE AND NITRONAPHTHALENE.

These compounds are used for the purpose of disguising the presence of mineral oils, by destroying their fluorescence or " bloom." Nitrobenzene is easily recognisable by its powerful and characteristic odour of oil of bitter almonds, but nitronaphthalene cannot be detected by its smell. Greases are frequently scented with nitrobenzene to disguise the nature of the fat or oil used in their preparation. For the detection of nitronaphthalene, the following test, depending upon its reduction to naphthylamine, has been proposed by Leonard [1] and by Holde.[2]

A few cubic centimetres of the oil are warmed in an Erlenmeyer flask with zinc dust and dilute hydrochloric acid, and the mixture is frequently agitated. During this process, the fæcal odour characteristic of α-naphthylamine will be perceived. After the reduction is complete, the contents of the flask are poured into a separating funnel, and the acid liquid is drawn off through a filter paper into another separating funnel. It is there treated with sufficient caustic soda solution to redissolve the zinc hydroxide at first precipitated, and, after cooling, is shaken with ether, which dissolves the liberated α-naphthylamine, the presence of which is indicated by the violet colour and fluorescence of the ethereal solution. The latter, after drawing off the aqueous liquid and washing with water, is evaporated to dryness, leaving a residue of the violet-coloured base. On treating this residue with a few drops of hydrochloric acid, the chloride is formed, which remains partly insoluble and partly soluble; but, on evaporating the excess of acid and adding water, a clear aqueous solution is obtained, in which ferric chloride gives an azure-blue precipitate. When filtered, this precipitate becomes purple-red, and the filtrate blue-violet. Instead of treating the residue with hydrochloric acid, and testing with ferric chloride, it may be dissolved in a little alcohol. On then adding a drop of a solution of sodium nitrite acidified with acetic acid, a yellow colour is produced, which is changed to crimson by hydrochloric acid.

Nitrobenzene, if present, is reduced by the zinc dust and hydrochloric acid to aniline, which is obtained on evaporating the ethereal solution as described above, either pure or mixed with α-naphthylamine, according to whether nitronaphthalene were simultaneously present or not. On treatment with hydrochloric acid, pure aniline dissolves readily, and on diluting and adding ferric chloride a green precipitate is produced, which afterwards turns deep blue, and does not become purple-red even on long standing; the filtrate, instead of being blue-violet, is yellow. When α-naphthylamine and aniline

---

[1] *Chem. News*, lxviii. (1893), p. 297.

[2] *Jour. Soc. Chem. Ind.*, xiii. (1894), p. 906.

are present together, the precipitate is at first azure-blue, afterwards dirty red-brown, finally purple-red, and the filtrate is violet.

Z.—DETECTION AND ESTIMATION OF WATER.

The presence of water in pale mineral oils is indicated by the appearance of turbidity, or by actual visible drops of water which sink in the oil instead of rising as air-bubbles do. In the case of fatty oils, such as olive oil, whether turbidity is due to the presence of moisture can be readily ascertained by heating some of the oil in a dry boiling-tube until clear. The water expelled by the heat will condense upon the cool sides of the tube above the oil. Water in greases is indicated by the frothing and crackling which occur when a small quantity of the grease is heated in a dry test-tube, and by the condensation of drops of water on the upper, cool part of the tube; whilst the grease, if free from water, will melt quietly to a clear fluid.

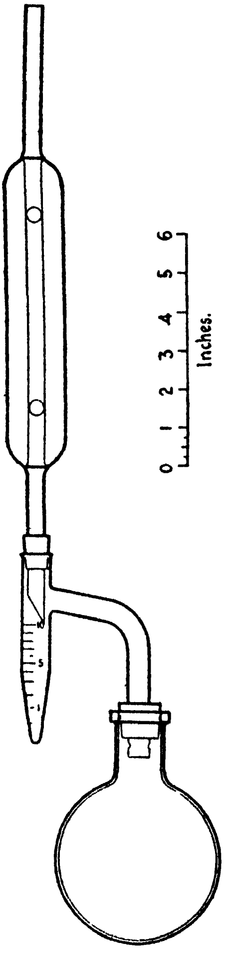

FIG. 118A.

A very delicate test for the presence of traces of water in mineral oils, especially useful in testing transformer oils, is made by heating 50 c.c. of the oil over a small free flame in a small, perfectly dry, distillation flask with side tube, and a thermometer in the oil, to a temperature of 250° F. (not higher). Water, if present, will condense as a dew in the upper part of the neck of the flask, and can be identified by means of the very delicate ferricyanide and ferrous salt test-paper suggested by F. Scriba,[1] a strip of which should be placed in the neck of the flask and held in position by the cork. The temperature of the oil should not be raised above 250° F., as some mineral oils contain an oxidised constituent which gives rise to the formation of water if the oil be overheated.

The test-paper is prepared by dipping strips of filter paper into a 5 per cent. ferrous ammonium sulphate solution, thoroughly drying, and dusting the dried paper over with finely powdered potassium ferricyanide. The strips of paper and powdered salt are conveniently kept in a stoppered glass bottle until required for use. A mere trace of moisture immediately produces a deep blue colouration on the paper.

Estimation of Water in Mineral Lubricating Oils.—*Standard Method.*[2]—100 c.c. of the oil are measured into a round-bottom flask of 500 c.c. capacity, and the measure is rinsed out with two successive 50 c.c. portions of petroleum spirit which are poured into the flask and carefully mixed with the oil by swirling. The petroleum spirit used must be free from water, and when distilled by I.P.T. method, G. 3,[3] must yield 5 per cent. of distillate at a temperature not above 100° C. nor below 90° C., and 90 per cent. of distillate at a temperature not above 205° C. A boiling stone, such as a piece of unglazed porcelain, or a few fragments of

---

[1] *Zeit. Physik. Chem.*, **19** (1906), 298.

[2] Abstracted from *Standard Methods*, 1924, pp. 70–73, published by the Institution of Petroleum Technologists, London.

[3] *Ibid.*, pp. 5–8.

ignited pumice are inserted into the flask to prevent bumping, and the flask is connected with a condenser and measuring tube, preferably such as is illustrated in fig. 118A. Distillation is conducted at such rate that the condensed distillate falls from the end of the condenser at 2 to 4 drops per second, and is continued until no water is visible on any part of the apparatus, except at the bottom of the measuring tube. A persistent ring of condensed water in the condenser tube is removed by increasing the rate of distillation for a few minutes. The operation usually requires less than one hour. The number of c.c.'s of water in the measuring tube is recorded as "— per cent. water, I.P.T. Method."

The Estimation of Water in Lubricating Greases may be made by one of the following methods:

1. *By heating in an air-bath at* 105°-110° *C.*—About 5–10 grms. of the well-mixed grease are placed in a small tared beaker, and the exact weight is taken. The beaker is then heated in the air-bath at 105°–110° C. until frothing has ceased and the grease has melted down to a clear oil free from visible drops of water. It is then cooled and reweighed.

2. *By stirring with a thermometer over a naked flame.*—100 grms. of the grease are heated in a weighed porcelain basin over a small flame, and continually stirred with a thermometer at a temperature not exceeding 105° C. (221° F.), until frothing has ceased and the grease is in calm fusion. The basin and contents, when cold, are reweighed. If the thermometer bulb be well drained into the basin whilst hot, the small quantity of adhering fat may be neglected; or, the bulb may be wiped with a small piece of filter paper counterpoised with the basin.

CHAPTER IX.

THE SYSTEMATIC TESTING OF LUBRICANTS BY PHYSICAL AND CHEMICAL METHODS.

The analytical examination of lubricants is conducted with different objects and on different lines according to the nature of the sample to be tested. If this be an undescribed oil, the first point to ascertain is whether the sample is a hydrocarbon oil free from fatty oil, a fatty oil or fat free from hydrocarbon oil, or a mixture of the two. An undescribed hydrocarbon oil may be a mineral oil from petroleum or shale, a rosin oil, a coal-tar oil, or a mixture of these. A mineral oil is subjected, chiefly, to physical tests to ascertain its viscosity, flash-point, cold test, etc., in order to determine whether it is suitable for use as a spindle oil, a machine or engine oil, or a cylinder oil; and to such chemical tests, in addition, as will show whether the oil has been sufficiently refined, and is free from undesirable impurities, undue tendency to form deposits, or emulsify, etc. A fatty oil, such as rape oil, olive oil, or tallow, is tested first of all to ascertain whether it is sufficiently free from acidity (see p. 296), and then more elaborately to prove whether the sample is genuine or adulterated, and especially whether any oil of drying or semi-drying character has been added which would tend to increase the natural tendency of the oil to thicken or gum by oxidation. A mixed lubricant (which includes most greases) containing both hydrocarbon oil and fatty oil, in addition perhaps to soap, water, etc., is first tested qualitatively to find out the nature of the main ingredients, and then a more or less complete quantitative analysis is made with the object of ascertaining the composition of the mixture. The information thus obtained may be supplemented by viscosity and other tests, as in the case of a pure mineral oil. Lubricating oils are now usually purchased to specification and the object of the tests then is to ascertain whether the specification had been complied with.

A.- UNDESCRIBED OILS.

The nature of an undescribed lubricating oil, if simple and not a mixture, is almost always indicated by the smell, taste, or appearance (colour, fluorescence, consistency, etc.). How much can be determined in this way in the case of a mixed oil depends upon the experience and skill of the observer. The smell is best observed by pouring a little of the oil into the palm of the hand, rubbing it with the fingers, and smelling the warm oil. Sometimes the oil may with advantage be heated in a capsule or small basin.

The specific gravity of the oil may next be taken, by the bottle method (p. 240) if the oil be a thick fluid, or by the Westphal balance (p. 242) or hydrometer if it be a thin fluid. Reference to the following table will then show to which class the oil, if pure of its kind, can belong:—

SPECIFIC GRAVITIES AT 60° F.

Vegetable and animal oils	0·879–0·968 [1]
Mineral oils from petroleum and shale	0·830–0·996 [2]
Rosin oils	0·960–1·01
Heavy coal-tar oil (grease oil)	1·065–1·100 (*Hurst*)

A pure rosin or coal-tar oil will usually be recognised by the smell and high specific gravity of the sample, and it will only remain to apply confirmatory tests, such as the acetone test (p. 374) and the Liebermann-Storch test (p. 351) to identify rosin oil. The very characteristic smell and high specific gravity of coal-tar oil is also usually sufficient to identify it without further test.

The probability is, however, that the sample will turn out to be either a pure mineral oil, a fatty oil, or a mixture of the two, and to distinguish between them in a preliminary way the tests described in Chapter VIII., Section B (p. 297), may be applied. The further investigation will be then found in one of the following sections.

B.—MINERAL OILS.

By large consumers, mineral lubricating oils are usually purchased to specifications describing the characteristics of the oil which has been found by practical experience to be the most suitable for the purpose required. Such specifications should state whether a pale, red, or dark oil is required, what the viscosity, specific gravity, flash-point and cold test must be, and the degree of purity necessary.

Colour, Appearance, etc.—Whether an oil is a reduced or distilled oil is ascertained mainly by its appearance, but also to some extent by other tests. Reduced oils, unless charcoal-filtered, are dark in colour and opaque, brownish or greenish by reflected light, and often fluorescent. Distilled and charcoal-filtered (refined) oils vary in colour from pale amber to orange or deep red, are generally fluorescent, and are either perfectly bright and transparent (spindle oils and some engine oils) or merely translucent (charcoal-filtered cylinder oils). A turbid appearance may be due to moisture.

For the sake of uniformity, the colour and appearance should be observed under standard conditions, *e.g.* in a ¼-inch (Lovibond) glass cell with parallel flat sides, held first between the eye and a window (appearance by transmitted light), and then with the observer's back to the window (appearance by reflected light). Fluorescence may be observed by looking down into the cell held below the edge of a table or bench fronting a window. Redwood examines pale-coloured oils by means of Lovibond's tintometer, using a 2-inch cell and matching the colour by means of coloured glasses (see p. 283).

Viscosity.—This determination is usually made at two temperatures, viz. at 70° F. if the oil be fluid at that temperature, and in the case of spindle and machine oils also at 100° or 140° F. Cylinder oils are conveniently tested at 100° or 120° or 140° and at 200° or 212° F.; there is not much to be gained by making tests at higher temperatures, though in Redwood's viscometer a determination can be made at as high a temperature as 400° F. All results should be expressed, if possible, in absolute C.G.S. units (poises or centipoises), as well as in seconds. The viscosities of a number of oils in poises or centipoises are given in the tables on pages 235 and 387.

Specific Gravity.—This is determined by one of the methods described in Chapter VII., Section B (p. 297). The bottle method is most suitable for the thicker oils, but the Westphal balance or hydrometer may be used for spindle

---

[1] Vegetable fats (Japan wax, palm-nut oil) have a higher sp. gr. (see Table LXXIX, p. 250).

[2] The sp. gr. of mineral lubricating oils rarely exceeds 0·955.

oils and the lighter machine oils. The specific gravity is of secondary importance in regard to the lubricating value of an oil, but it should be borne in mind that the lower the specific gravity of a mineral lubricating oil in relation to the viscosity, the better, as a rule, the lubricating value of the oil. The specific gravities of some mineral lubricating oils are given in the tables on pages 251 and 387.

Flash-point and Volatility. The (closed) flash-point, determined by the Pensky or Gray testers (pp. 255, 256), should not, as a rule, be lower than 300° F. for outdoor machinery and 340° F. for indoor work. Cylinder oils should flash at temperatures well above that of the cylinder in which they are intended to be used, say, at from 500° to 600° F. All cylinder oils should be tested for volatility by Archbutt's method described on p. 259, and should not lose more than 1 per cent. in one hour at the temperature of the steam from the boiler.

Machine oils may also with advantage be submitted to this test, and the loss of weight in one hour at, say, 370° F. determined. A great difference will often be found between oils obtained from different crude petroleums. The results given in the following table illustrate this, the four oils numbered 1 to 4 being all American mineral engine oils of the red type

TABLE CXXXII.—VOLATILITY TESTS OF ENGINE OILS.

	1.	2.	3.	4.
Viscosity (poises), at 60° F.,	2·13	2·99	2·51	5·48
Viscosity (poises), at 100° F.,	0·56	0·61	0·61	0·97
Flash-point (closed test),	372° F.	358° F.	356° F.	346° F.
Loss of weight in 1 hour at 370° F.,	9·1 %	45·2 %	18·9 %	26·7 %

It will be noticed that the oils differ very much in volatility at 370° F., and that the volatility has no relation to the viscosity and very little relation to the flash-points of the oils. The lower the volatility in relation to the viscosity, the better the lubricating value of the oil.

Machine oils flashing below 300° F. should be tested for volatility at 100° F. and 200° F., the test being continued until the oil ceases to lose more than 0·5 per cent. in one hour. A good lubricating oil should lose little or nothing at these temperatures. A dark mineral lubricating oil flashing at 200°-210° F. was found to lose 6 per cent. by evaporation at 100° F. and 17 per cent. at 200° F.

Setting-Point or Cold Test.—This, in the case of oils (not greases), should obviously be, if possible, below the temperature at which the oil is to be used. The test is, of course, most important in the case of oils for outdoor machinery, such as railroad oils. For such purposes, summer oil should remain fluid at 32° F., and winter oil at 15° F., or lower, if possible.

General Purity and Freedom from Adulteration.—In addition to the foregoing, there are certain tests as to which circumstances must decide whether they need be made or not; these are for the detection of impurities, unacknowledged additions, or adulterants. The chief of such substances to be looked for in mineral oils are :—

(*a*) *Impurities due to Imperfect Refining.*—A well-refined, pure mineral lubricating oil should contain neither free acid, free alkali, sodium sulphate, nor soap. It should be perfectly clear and transparent, free from water, and should deposit nothing on standing.

(*b*) *Free Acid.*—The following test for *free naphtha acids* is due to Lissenko and Stepanoff:—

5 c.c. of a 1·5 per cent. aqueous solution of caustic soda is added to 10 c.c. of the oil and vigorously shaken for 2–3 minutes at about 80° C. After standing in water at 70° C. for two to three hours, the alkaline liquid which separates from the oil should be clear. Clots of soap insoluble in the dilute alkaline solution, formed by the neutralisation of free naphtha acids present in the oil, would indicate imperfect refining.

Any refined mineral oil containing more than 0·2 per cent. of total acidity, calculated as oleic acid, should be tested for *free mineral acid* (usually sulphuric). The method is described on p. 296. It is seldom necessary to test reduced oils. Abnormally high acidity may be due to the presence of *rosin acids* contained in rosin oil added as an adulterant. Rosin acids can, if desired, be isolated by the method described on p. 316. Special oils, such as "germ process" oils, may contain small quantities of free fatty acid, usually from 0·5 per cent. to a maximum of 2 per cent. expressed as oleic acid.

(*c*) *Free Alkali.*—This impurity is detected by shaking 10 c.c. of the oil with an equal volume of neutralised alcohol and a few drops of phenolphthalein. A red colouration is indicative of free alkali. None should be present in a carefully refined lubricating oil.

(*d*) *Sodium Sulphate and Soap.*—For the detection of sodium sulphate and soap the ash is a useful test (see below and on p. 378).

A delicate test for *petroleum soap*, dependent upon its hydrolysis by warming with water, is recommended by Holde:—

20 c.c. of the oil are well shaken in a corked tube with 10 c.c. of distilled water and a few drops of phenolphthalein solution. The contents of the tube are warmed in a water-bath to 70°–80° C. and allowed to cool. After 30–40 minutes, the oil will have separated from the water, and if alkali soaps are present, will have acquired a rose colouration. The absence of free alkali (shown by the red colour given by phenolphthalein in an alcoholic solution of the oil) must first of all be proved.

Every mineral oil which has a non-homogeneous appearance, or an unnatural viscosity, or which exhibits a tendency to form threads in dropping or when the oily cork is removed from the bottle, should be tested for *soap-thickeners* by the method described in Chapter VIII., section W (p. 377). If soap be found, its nature can be ascertained by the analysis of the ash (see p. 378; also section E, p. 406). By well shaking some of the soap-thickened oil with dilute hydrochloric acid in a stoppered bottle heated by immersion in hot water, then pouring the contents into a separating funnel, drawing off the acid, and well washing the oil with hot water, the mineral oil can be obtained in its natural state and its true viscosity ascertained.

(*e*) *Ash.*—Dark mineral oils usually leave some ash when burnt, refined oils none (see p. 378). In an oil the origin of which is unknown, the amount of ash should always be ascertained. An abnormally high ash indicates either the presence of soap-thickeners or imperfect refining.

(*f*) *Fatty Oil or Fat.*—An oil sold as a pure mineral oil and at a low price is not likely to contain a fatty oil; but special brands of mineral oil, especially cylinder oil, not unfrequently do contain an unacknowledged small quantity of animal or vegetable oil to which some good or bad quality, revealed in practice, may be due. Therefore, in testing an unknown oil alleged to be purely mineral, it is always desirable, sometimes most necessary, to prove the absence of fat by careful chemical analysis. For this purpose Ruhemann's test may be used (p. 297), but the quantitative method described on p. 312 is the only absolutely certain test.

(*g*) *Rosin Oil.*- The methods of detecting and estimating the proportion of this adulterant are described at pp. 374-376.

(*h*) *Demulsification Test.*- Oils used for forced lubrication should separate quickly and completely from water. To test this property, one of the methods described in section H, Chapter VII., on pp. 274-277, should be used.

(*i*) *Gumming.*- This is scarcely a property of pure mineral oils, as such oils do not gum like the fatty oils. The remarks under this head in sections Q and R1-3, on pp. 352 368, should be read, where the causes which may lead to the formation of deposits by mineral oils are discussed. If there be any reason for investigating the tendency to form a gummy or sticky residue which a pure mineral may appear to exhibit in practice, the " film test " described on p. 353 may be used. In some cases it may be desirable to make such a test upon a surface of steel or other metal, or upon a painted surface.

(*j*) *Asphalt and Tar.*-- Little need be added to what has been said in Chapter VIII. sections R1, R2, and R3 (pp. 359-368). Tests for these substances are usually required only in the case of oils working at high temperatures (cylinder oils, turbine oils, etc.).

(*k*) *Suspended Hydrocarbons* (*Paraffin*). Some American red engine oils contain minute crystals of paraffin in suspension, which are very objectionable if the oil has to be siphoned through worsted or passed through the fine orifice of a lubricator. These crystals, if not present in sufficient quantity to be readily visible, may sometimes be seen forming a scum or pellicle on the surface of the oil which has been allowed to stand in a cold place in a beaker.

(*l*) *Caoutchouc.*--According to the authors' experience, this is a very rare admixture. If, however, stickiness or unnatural viscosity of a mineral oil be observed which is not due to the presence of a soap thickener, then caoutchouc should be searched for. See p. 377.

(*m*) *Mechanical Impurities.*--Suspended impurities (grit, dirt, and fine particles of metal from the bearings in which the oil may have been used) in a mineral oil, if not visible owing to the dark colour of the oil, would be detected by filtering the warm oil through filter paper or straining through linen or very fine muslin.

(*n*) *Water.*- -This is detected by the tests described in section Z (p. 380).

The **characteristics of a selection of mineral lubricating oils,** and the purposes they are used for, are given in Table CXXXIII., on p. 387.

C.—FATTY OILS AND FATS.

The most important and useful physical and chemical data for the recognition of the lubricating oils belonging to this class are included in Table CXXXIV. on pp. 388 and 389, and in the following pages hints for the examination of each oil are given.

The first test to make in examining any fatty oil intended for lubrication is the determination of *acidity*. This is specially important in the case of olive oil, tallow, palm oil, and coconut oil. The last two, as commercially met with, are usually quite unfit for use as lubricants. The more delicate and intricate the machinery, the greater the need for selecting the least acid oil, and the smaller the amount of acidity permissible; for no machinery should oil be used containing more than 4 per cent. of free (oleic) acid. The reason for this statement and the methods of determining acidity will be found in Chapter VIII., section A (p. 284).

Wool or cloth oils are not here alluded to. They often contain very large amounts of free fatty acids; indeed, commercial oleic acid is used as a wool oil under the name of " oleine "; such oils are quite unsuitable for the lubrication of machinery.

TABLE CXXXIII.

Description.	Viscosity in Centipoises.				Sp. Gr. 60° F.	Flash-point (Closed Test). °F.	Volatility Test (see pp. 259–261). Loss of Weight, per cent.			Solidifying-Point. (Cold Test.)	Composition.
	20° C. 68° F.	40° C. 104° F.	60° C. 140° F.	100° C. 212° F.			1 hr. at 370° F.	1 hr. at 400° F.	6 hrs. at 500° F.		
Cylinder Oils for Superheated Steam—											
Wakefield's S.H.S.,	..	..	184·0	37·1	0·9111	560°	..	..	26·0	Above 32° F.	Mineral oil 98·4. Fatty „ 1·6.
Gargoyle (Vacuum Oil Co.),	..	..	104·0	23 9	0·9036	500°	..	..	41·5	„ 32° F.	Mineral „ 95·0. Fatty „ 5·0.
Cylinder Oils for Saturated Steam—											
" A " Cylinder,	..	..	125·0	26·9	0·9048	522°	..	1·72	..	.. 32° F.	Mineral oil.
" F.F.F." Cylinder,	..	..	115·5	24·5	0·8904	509°	..	0·78	..	„ 32° F.	„ „
Valvoline A.A. (Valvoline Oil Co.),	..	235·9	88·3	20·4	0·8862	490°	0·80	..	..	„ 32° F.	Mineral „ 98·7. Fatty „ 1·3.
Acheson's Grade " D " graphited oil,	..	..	162·4	34 0	0·9000	542°	..	0·68	29·4	„ 32° F.	Mineral oil with 0·3 % graphite.
Red Engine Oils—											
Queen's heavy red,	312·0	80·4	29·6	7·9	0·9180	423°	8·7	..	..	20°–23° F.	Mineral oil.
Queen's red,	213·6	63·4	24·6	6·7	0·9127	420°	10·5	..	..	17°–20° F.	„ „
Altair red (Texas),	397·9	89·1	30·4	7·1	0·9316	340°	26·5	..	..	Fluid at 0° F.	„ „
Russian Oils—											
No. 1,	305·0	78·0	28·7	7·4	0·9088	381°	15·5	..	..	Fluid at 0° F.	„ „
No. 2,	84·8	27·6	12·7	4·2	0·8986	350°	45·3	..	..	Fluid at −4° F.	„ „
Automobile Oils—											
Mobiloil B.B,	525·7	127·3	46·6	11·6	0·9024	438°	7·4	..	..	Above 32° F.	„ „
„ A.,	402·0	92·2	32·2	8·2	0·9227	377°	21·3	..	..	23°–26° F.	„ „
Motorine C.,	..	137·6	50·5	13·2	0·9015	390°	12·9	..	..	Above 32° F.	Mineral oil 95·5. Fatty „ 4·5.
Ford Filtrate, " Summer,"	154·8	47·6	19·7	5·9	0·9033	352°	24·8	..	..	23°–26° F.	Mineral „
„ „ " Winter,"	131·3	41·7	18·1	5·4	0·9030	395°	23·2	..	..	20°–23° F.	„ „
Gas Engine Oils—											
Bayonne,	167·6	52·2	21·1	6·0	0·9035	413°	14·1	..	..	21°–24° F.	„ „
Valvoline A.G.E.,	136·7	46·9	20·8	6·4	0·8735	398°	15·5	..	..	18°–21° F.	„ „
Light Machinery Oils—											
Pale 900/7,	89·3	30·5	14·0	4·5	0·8936	389°	25·1	..	..	18°–21° F.	„ „
Nabob,	126·3	35·8	15·0	4·6	0·9291	332°	49·3	..	..	Fluid at 0° F.	„ „
Spindle Oils—											
Pale 865,	18·4	8·3	4·7	2·3	0·8791	317°	..	..	..	8°–11° F.	„ „
„ 885,	36·7	15·2	..	..	0·8864	334°	39·1	..	..	8°–11° F.	„ „
Manchester spindle,	60·6	23·0	10·9	3·6	0·8729	394°	31·8	..	..	15°–18° F.	„ „
Eagle spindle,	75·8	28·2	13·5	4·5	0·8705	395°	14·4	..	..	20°–23° F.	„ „
Miscellaneous—											
Typewriter oil,	28·9	12·7	6·0	2·6	0·8664	290°	..	..	..	Fluid at −5° F.	„ „
Scotch shale oil 0·890,	40·9	17·1	8·5	3·5	0·8913	337°	..	..	..	12°–15° F.	„ „

Rape Oil.

Refined rape oil for lubrication and burning should be clear and pale yellow in colour.

The **total acidity,** calculated as oleic acid, should not exceed 3 per cent.

TABLE CXXXIV.—VEGETABLE AND ANIMAL

Reference to complete Tables, page	Physical and Chemical Constants.	Rape Oil. (Colza Oil.)	Olive Oil.	Arachis (Earth-nut) Oil.	Castor Oil.	Palm Oil.
250	Specific gravity at 60° F., .	0·914–0·916	0·914–0·918	0·916–0·919*	0·959–0·968	0·921–0·925
235	Viscosity (poises) . .	1·09–1·18 at 60° F.	1·00 at 60° F.	between olive and rape oils	2·73 at 100° F.	..
268	Solidifying-point, °F., .	10–28	21–50	27–37	−0·4 to +14	..
273	Melting-point, °F., . .	..	..	..	..	80–97 when free from excess of acid
280	Oleo-refractometer value at 22° C.,	+15° to +20°	0° to +3·5°	+3·5° to +7°	+37° to +46°	..
301	Saponification value, %, .	17·0–17·5	18·5–19·6	18·7–19·1*	17·6–18·7	18·9–20·6
315	Hehner value, %, . .	94·5–96·5	95–95·5	94·9–95·9	95·3–95·5	94–97
319	Reichert value; c.c. per 2·5 grms.,	0·3	0·3	..	1·4	0·5–0·8
319	Reichert-Meissl value; c.c. per 5 grms.,	0·0–0·8	0·45–1·5	0·0–1·6	1·1–4·0	0·7–1·9
326	True acetyl value (Lewkowitsch), %,	1·47	1·06	0·91	14·61–15·09	1·60
329	Iodine value, % . .	97–105	76·2–94·7 (usually 82–86)	83·3–105 (?)*	81·4–90·6	50·2–57·5
337	Maumené thermal value; 50 grms. oil, 10 c.c. of 97% sulphuric acid, °C.,	58–63	40–45	49–53	54–66	..
311	Unsaponifiable matter, %, .	0·6–1·3	0·8–1·5†	0·9–1·2	0·5–0·8	1·25
	Mixed Fatty Acids.					
251	Specific gravity at $\frac{100^\circ}{100^\circ}$ C., .	0·875–0·876	0·874–0·876	0·879	..	0·870
274	Solidifying-point or titer-test, °C.,	12·2–18·5	17·2–26·4	29·2	..	35·9–47·6
274	Melting-point, °C., . .	16–22	19–31	27–34	13	41–50
329	Iodine value, %, . .	96·3–105·6	86·1–90·2	95·5–103·4	86·5–88·5	53·8
	Mixed Alcohols.					
251	Specific gravity at $\frac{100^\circ}{100^\circ}$ C., .	..	..	..	..	..
312	Melting-point, °C., . .	..	..	..	..	..
331	Iodine value, %, . .	..	..	..	..	..
321	Saponification value of mixed acetates, %,	..	..	..	..	..

Of 206 samples of commercial refined rape oil examined during 1909 and 1910 all but two satisfied this condition (see p. 285). Low acidity is of great importance if the oil be required for burning in lamps, since free fatty acids, as well as free mineral acid, have a charring action upon the wick.

---

* See remarks on pp. 394, 395.

† Olive residuum oil may

In rape oil refined by sulphuric acid, traces of free sulphuric acid exist, as is proved by the following experiments.

100 c.c. of rape oil and 100 c.c. of distilled water were placed in a large beaker on the steam-bath, and steam was blown through the mixture vigorously for half an hour. The oil and water were then poured into a separating funnel, the water was drawn off through a wet filter paper, and the oil was washed with a little more water. After concentrating the aqueous liquid to rather less than 50 c.c., it was again filtered, and the filtrate was titrated with deci-

Oils used for Lubrication.

Tallow (Beef and Mutton).	Tallow Oil. (Ox Oil.) (Animal Oil.)	Lard Oil.	Neatsfoot Oil.	Sperm Oils.		Porpoise and Blackfish Jaw Oils (strained).	Ben Oil.	Hazel-nut Oil.
				Southern.	Arctic.			
0·937–0·953	0 914–0·919	0·913 0·919	0 914–0 919	0·878–0·884	0·876–0·881	..	0 912–0 920	0·915–0·917
0·18 at 150° F.	1 04–1·13 at 60° F.	0·99 at 60° F.	about same as tallow oil	0·39–0·42 at 60° F.		..	..	..
..	variable, say 32–46	25–42 (occasionally lower)	..	about 32		..	32–48	-4 to +14
108–120	..	..	..	..		..	..	..
-15° to -18°	-1° to -5°	0° to +5 5°	-1° to -4°	-12° to -17°		..	..	..
19·3–19·8	19 3–20 0	19·3–19 8	19 4–19 9	12 0–13·7	12 3–13 6	25 4–29 0	18·5–18·8	18·7–19 7
95–96	..	..	94·8–95·9	..	..	66 3–72·1	..	95·5
0·25	..	..	..	1·3	1 4	47·8–65·9	..	..
1·0–1 2	..	0·0	0·9–1·2	..	..	131·6	..	0·99
0·24–0·86	1·85	0·26	0·22	0 45–0 64	0·41 0 64	..	..	..
32·7–47·8	55·5–60	67–82 (according to setting-point)	66–77	80·0–85·0		21 5–49 6	72–113	83–90
..	35–42	40–46	39–49	45–47		..	..	..
0·5	..	0 5–1·2	..	36–41		16	..	..
0·870	..	0 878	0·874–0·880	..	..	..	..	..
38·3–48 3	..	27–33	26–27 (sheep's foot oil 21–22; horse's foot oil 28·6)	11 1–11 9	8·3–8·8	..	37·2–37·8	..
42–54	..	33·2–38 4	28·5–30·8	13·3–21·4	10·3–16·4	..	..	17–25
26–41 3	55–57	..	62–77	83·2–88·1	82·2–83·3	..	..	90·1–90·6
..	..	..	..	..	0·8271	..	..	..
..	..	..	..	23·5–27·5		..	..	..
..	..	..	..	59·5–69·3		..	..	..
..	..	..	..	18·49	18·62	..	..	..

contain up to 3·3 per cent. of unsaponifiable matter.

normal soda, using methyl orange as indicator. The following results were obtained:—

Oil refined at	Sulphuric Acid (H_2SO_4) per cent.
Stettin,	0·0056
Hull, 1st sample,	0·0050
Hull, 2nd sample,	0·0026

The neutralised liquids were boiled down to 2–3 c.c. and tested with barium chloride, and in each case a precipitate of barium sulphate was obtained, which was estimated by the eye to about correspond with the result obtained by titration. These samples being commercial oils of good quality, not selected, it may be assumed that the percentage of *free mineral acid* in refined rape oil should not exceed 0·006 per cent. of H_2SO_4, which is equivalent to 0·035 per cent. of oleic acid.

The **specific gravity** of genuine refined rape oil suitable for lubrication usually lies between 0·914 and 0·9155 at 60° F.; if higher than 0·9160, either ravison or other oil of more strongly drying character than rape is probably present. A lower sp. gr. than 0·914 would be suspicious, for, although perfectly genuine rape oil may be as low as 0·9132 in sp. gr., such oil is seldom met with in commerce. An abnormally low sp. gr. might be due to the presence of light mineral oil (see p. 391).

The **viscosity** of rape oil is exceptionally high, and is a very valuable indication of its purity. The time of efflux of 50 c.c. of refined rape oil from Redwood's viscometer at 70° F. should not be less than 370 seconds, and ranges from 370 to about 415 seconds.[1] The number 464·6 recorded by Crossley and Le Sueur for Bombay rape oil is quite abnormally high. All fatty oils, except castor oil, likely to be added as adulterants to rape oil, would lower the viscosity; and although this could be counteracted by adding castor oil or blown oil, the presence of these oils would be indicated by other abnormal characters, castor oil raising the acetyl value, and both oils raising the specific gravity. Rosin oil or heavy mineral oil, if present, would be detected in the unsaponifiable matter.

The **saponification value** of genuine rape oil ranges from 17·00 to 17·50 per cent. A value in excess of 17·50 would indicate the presence of ravison or other more strongly drying oil. On the other hand, a value lower than 17·0 would indicate the presence of an unsaponifiable oil, possibly of sperm or Arctic sperm oil.

The **iodine value** of rape oil ranges from 97 to 105, being slightly lower than that of cottonseed and sesamé oils, and considerably lower than that of the more strongly drying oils. This test is very useful for the detection of ravison oil, which has a higher iodine value than rape oil.

The **Maumené value**, or rise of temperature on mixing 50 grms. of the oil with 10 c.c. of sulphuric acid (containing 97 per cent. H_2SO_4), ranges from about 58° C. to 63° C.; the result depends to some extent upon the "personal equation" of the operator, which is not serious if the instructions given on p. 336 are strictly adhered to. A high result indicates the presence of ravison or other drying or semi-drying oil, and a low result indicates mineral or sperm oil.

The **unsaponifiable matter,** determined by the method on p. 303, should not exceed 2 per cent. in genuine commercial rape oil. In the expressed oil it is usually below 1 per cent., but in the oil extracted from the seed by petroleum spirit 1 per cent. must be allowed for residual hydrocarbons. If a larger pro-

---

[1] These numbers refer to an instrument which delivers 50 c.c. of water at 70° F. in 25·74 seconds.

portion than 2 per cent. be obtained, it should be purified by resaponification, as directed on p. 304; and if still materially in excess of 2 per cent., the product should be examined as directed in Chapter VIII., section F (p. 307), to ascertain whether hydrocarbons (mineral or rosin oil), cholesterol (from animal oils), or wax alcohols (from sperm or bottlenose oils) are present. In genuine rape oil the unsaponifiable matter consists very largely of phytosterol, which may be obtained in characteristic tufts of needle-shaped crystals by dissolving the unsaponifiable matter in 2–3 c.c. of warm 90 per cent. alcohol and cooling the solution.

Extracted rape oil sometimes has abnormally low specific gravity and viscosity owing to incomplete expulsion of the petroleum spirit used in the extraction of the oil from the seed. Such oil will have an abnormally low **flash-point**. When tested in the Pensky-Martens or Gray closed testers, normal rape oil flashes at 410°–450° F. Samples of extracted rape oil have been found to flash at 180° F., and to lose about 1 per cent. in weight when 1 grm. of the oil was heated in a platinum dish in the water-oven for 1 hour.

Sometimes a determination of the **solidifying- and melting-points** of the mixed fatty acids is useful. The acids of genuine rape oil solidify at 10·5°–18·5° C. (titer test 12·2°–18·5°), and melt at 16°–22°; those from ravison oil do not solidify completely at 0° C.; those from cottonseed oil solidify at 30·5°–36° (titer test 28·1°–37·6°) and melt at 34°–40°.

Rape oil should always be submitted to the **oxidation test** described on p. 353 (watch-glass test), a standard sample of known purity being tested at the same time and under the same conditions.

Halphen's **colour reaction** for cottonseed oil (p. 346) and the furfural test for sesamé oil (p. 349) should not be omitted; both may be relied upon to give negative results with genuine rape oil. If a red colour be obtained by Halphen's test, the presence of cottonseed oil may be confirmed by the Milliau test (p. 346), using the fatty acids, which can easily be obtained from the soap solution left after isolating the unsaponifiable matter. Some genuine rape oils have a slight, slow reducing action on the silver solution; but an immediate, decided reduction proves the presence of cottonseed oil, and the amount of reduction is usually in proportion to the percentage of cottonseed oil present.

The above-named tests suffice for the detection of the usual adulterants, viz.: *ravison, cottonseed, maize, linseed and the drying oils, fish oils, mineral oil, and Arctic sperm oil.* The latter, though usually more expensive than rape oil, has been sometimes added in order to adjust the specific gravity and saponification values which have been raised by adulteration with oil such as cottonseed.

Olive Oil.

Pure neutral olive oil is one of the best lubricants we possess, but unfortunately a great deal of it is spoiled previous to extraction by allowing the pulp to ferment and the oil to become decomposed (see pp. 148 and 286); also by storing the oil in a crude state. Olive oil intended for lubrication must therefore be carefully examined for acidity (p. 295). Four per cent. of free oleic acid should be the maximum allowed; small quantities of oil intended for the lubrication of delicate machinery may be purified from every trace of acid by refining with soda (see p. 297).

Olive oil should be clear and fluid at temperatures above 40° F., and pure yellow or greenish-yellow in colour. Some genuine olive oils are green or brownish-green, the colour being due to chlorophyll, which may be identified by means of its characteristic absorption bands if the oil be submitted to spectroscopic examination. But there are some adulterated oils which are artificially coloured green by *copper*; this may be detected by diluting some of the oil with ether and shaking with dilute sulphuric acid, which will remove *the green colour. On drawing off the acid liquid and adding excess of ammonia the deep blue colour characteristic of cuprammonium will be obtained.*

Turbidity of olive oil may be due to moisture or to solid glycerides or "mucilage" in suspension. Some olive oils, especially from Tunis, contain more solid fat than they can hold in solution at ordinary temperatures. Neutralised residuum oils may also contain mucilage and soap in suspension. On warming some of such oil in a dry boiling-tube over a small flame, the solid glycerides quickly dissolve and the oil becomes clear; if moisture be present, it will be expelled on heating to 250° F. and will condense on the cool sides of the tube above the oil and become visible. Olive oil for lubricating should be free from moisture or mucilage.

Olive oil, being one of the most expensive lubricating oils, is very liable to adulteration. The most valuable instrument for the rapid detection of adulteration is the **oleo-refractometer** (see p. 279). As will be seen by reference to the table on p. 280, the recorded deviation caused by genuine olive oil ranges from 0° to +3·5°. 106 samples examined by Oliveri[1] ranged from 0° to only 1·2°. All fatty oils likely to be added as adulterants would increase the refraction, except lard, neatsfoot, and tallow oils. Arachis oil, which gives a deviation of only +3·5° to +7°, would not be detected unless present in large proportion, but would be found by **Bellier's** and **Renard's tests** (p. 339).

The **specific gravity** of neutral olive oil at 60° F. usually ranges from 0·915 (rarely 0·914) to 0·917, but may rise to 0·919 in the case of dark-coloured samples containing the oil from the kernel and endocrap.[2] Such oils should not be used for lubricating without a very careful examination as to their tendency to oxidise and gum, 0·5 grm. of the oil being exposed to the air at 212° F. on a watch-glass for sixteen hours side by side with the same weight of a sample of known good quality. All olive oils over 0·917 in specific gravity should be subjected to this test and to a very complete examination for adulterants, such as cottonseed, sesamé, curcas, and poppyseed oils. Adulteration with rape or earthnut oil would not be indicated by the specific gravity.

The (*Wijs*) **iodine value** of genuine European olive oil usually ranges from 82 to 87, averaging about 84·5. Some oils are met with having a lower value, even as low as 76·2. This was the (*Hübl*) iodine value of an olive oil examined by one of the authors, which was found to possess a quite normal specific gravity (0·9157 at 60° F.), saponification value (19·03 per cent.), and viscosity: the unsaponifiable matter amounted to only 0·88 per cent., arachis oil was absent, and the colour reactions for cottonseed and sesamé oils were quite negative. The acidity was 3·5 per cent. The low iodine value appeared to be due to an excess of palmitin, the oil being unusually sensitive to cold and depositing a large proportion of solid fat at a temperature of 46° to 47° F. A few olive oils of this kind have been met with, all of which had an iodine value below 80 per cent.[3] Thomson and Dunlop have recorded *Wijs* values of 82·2 to 89·1, obtained with olive oils prepared by themselves from the fruit and therefore undoubtedly genuine.[4] Higher numbers still have been recorded for single samples of olive oil from Algeria (90·5), Tunis (91·1 and 94·7), Morocco (91·5), Dalmatia (92·8), California (93·5), the Punjab (93·67), and

---

[1] *Jour. Soc. Chem. Ind.*, xiii. (1894), p. 45.

[2] Genuine Tunisian olive oil, according to Milliau, Bertainchaud and Malet, may have a specific gravity of 0·919 at 15° C. and an iodine value as high as 89·4. See *Chemical Trade Journal*, xxviii. (1901), pp. 388, 504, and 524.

[3] Lard oil was not looked for in these samples.

[4] *Analyst*, 1906, p. 281.

Mogador (94·3). In spite of these high results, yielded by a few varieties of olives grown in certain districts, it is rare to meet with genuine commercial olive oil having a higher iodine value than 87. It is said that, in California, *olive oil has been adulterated extensively with mustard oil from the white mustard (Brassica (sinapis) Alba), which grows there in great profusion. This oil* would raise the iodine value, and would at the same time lower the saponification value. Mustard oil contains arachidic acid, which would be a further means of detection.

The **saponification value** of genuine olive oil, according to De Negri and Fabris, who examined 203 samples, may range from 18·5 to 19·6 per cent., and is usually 19 per cent. 106 samples examined by Oliveri had values ranging from 19·05 to 19·5, 38 Californian oils tested by Tolmun and Munson ranged from 18·9 to 19·5, 400 samples of commercial olive oil (chiefly Spanish and Italian), examined by one of the authors, had values ranging from 18·80 to 19·29 per cent., and 20 samples of olive oil from Tunis and Algeria ranged from 18·92 to 19·19 per cent. A low saponification value might be due to the presence of olive-kernel oil (which can scarcely be regarded as an adulterant), or to adulteration with rape, mustard, sperm, or mineral oil. No adulterant likely to be added would materially *raise* the saponification value of olive oil.

The **Maumené value** of genuine olive oil, determined as directed on p. 336, is lower than that of any other vegetable oil, ranging, according to our experience, from 40° to 45° C. ; this test is, therefore, of great value for the detection of adulteration.

The **unsaponifiable matter** in genuine olive oil does not usually exceed 1·5 per cent. ; a higher result than this would probably be due to the presence of hydrocarbon (mineral or rosin) oil, or of wax alcohols from Arctic sperm oil. In olive-residuum oils, however, and in certain oils of the third pressing containing the kernel oil, larger quantities of wax-like unsaponifiable matter may naturally occur, even as much as 3·3 per cent. having been found by Archbutt.[1] This excess is derived, according to Milliau, from the shell of the olive kernel. The characteristics of the unsaponifiable matter from two samples of neutralised residuum oil examined by Archbutt were as follows :—

	1st Sample.	*2nd Sample.*
Specific gravity at 60° F.,	0·9346	..
Melting-point (Bensemann),	50·5°–52·5° C.	58°–60° C.[2]
Iodine value,	?	158·9
Yield of mixed acetates,	105·2 per cent.	..
Saponification value of ditto,	8·53 „	..
Melting-point of ditto,	35°–38° C.	..

Comparison of these figures with those in the table on p. 312 will show no resemblance between the characteristics of this unsaponifiable matter and any of the alcohols there recorded. The high iodine value is remarkable, but the unsaponifiable matter extracted from a sample of fine Malaga olive oil containing only 1·3 per cent. had an iodine value as high as 259, with a melting-point of 41°–42°. Dunlop[3] also has observed very high iodine values in the unsaponifiable matter of genuine olive oils prepared from olives in the laboratory. Thus, in the oil from Cretan olives, the unsaponifiable matter, purified by resaponification, had an iodine value of 268·3, and in the oil from Spanish and Turkish olives an iodine value of 308·4.

Useful information respecting the tendency of olive oil to gum by oxidation

---

[1] *Jour. Soc. Chem. Ind.*, xxx. (1911), p. 5.

[2] Of liquid portion.

[3] Private communication.

may be obtained by exposing 0·5 grm. on a watch-glass to the air in a water-oven at 100° C. for sixteen hours, side by side with an equal weight of a standard sample on a watch-glass of the same curvature. A more delicate test is the film test described on p. 353.

With reference to specific adulterants, the following remarks may be made:—

Cottonseed oil, unless it has been heated, would be detected with certainty by Halphen's test (p. 346) or by the Milliau test (p. 346), both of which give negative results with pure olive oil, and are sufficiently delicate to detect as little as 2 per cent. of cottonseed oil if present. Olive oil adulterated with cottonseed oil would, of course, contain more than this percentage, and the presence of the foreign oil would be confirmed by the increased refractive power, iodine value, and Maumené value of the sample, also by the result of the oxidation test; without this confirmation of the colour reactions, the presence of cottonseed oil as an adulterant could not be certified.

Sesamé oil would be detected, with certainty, by the very delicate Baudouin reaction (p. 349). Some genuine olive oils give a pale rose-red colouration, but it is unlikely for error to occur if the sample be submitted to confirmatory quantitative tests. Sesamé oil, if present as an adulterant in olive oil, would raise the refractive power, iodine value, and Maumené value of the oil, and would increase its drying and gumming property.

Earthnut (*Arachis*) *oil* can only be detected in olive oil with certainty by Renard's process, although a negative result by Bellier's qualitative test (p. 343) is sufficient proof of its absence. Earthnut oil oxidises more readily than olive oil, and its presence, therefore, lowers the lubricating value of the olive oil, and must be regarded as adulteration. It must not be forgotten that rape, mustard, and perhaps other oils from cruciferous plants contain arachidic acid. These oils would betray their presence by lowering the saponification value and by raising the iodine and Maumené values of olive oil.

Castor oil would raise the specific gravity, viscosity, and acetyl value of the sample, besides increasing the solubility of the oil in alcohol.

Curcas oil would raise the specific gravity and the Maumené and iodine values, and would increase the tendency to oxidise.

Arctic sperm oil, also *mineral* and *rosin oils,* would betray their presence by increasing the percentage of unsaponifiable matter, and could be identified with certainty and the amount determined by examining the latter.

Lard and *tallow oils* and *tea-seed oil* would be the most difficult to detect. The two former would probably raise the freezing-point; but, being non-drying oils and good lubricants, their presence would not otherwise be objectionable. The best method of detecting the presence of either lard or tallow oils in olive oil would be to isolate the stearin, which is absent from pure olive oil (Hehner and Mitchell, *Analyst*, xxi. (1896), p. 316), or to apply the phytosterol acetate test (see p. 310). The phytosterol isolated from pure olive oil melts at 135°–136·5° C.; its acetate melts at 120·3°–120·7° C. (Gill and Tufts). Lard oil would increase the percentage of solid fatty acids whose lead salts are insoluble in ether (Tolman and Munson).[1] Tea-seed oil is not likely to be used as an adulterant of olive oil at present prices (March 1926). Its presence would probably not reduce the value of olive oil as a lubricant.

Arachis Oil. Earthnut Oil. Groundnut Oil.

This oil exhibits, according to published figures, a wide range of values, but the oil which is suitable for use as a lubricant probably falls within narrower limits.

---

[1] See Allen's *Commercial Organic Analysis*, 4th edition, 1910, ii. 115.

The amount of **free (oleic) acid** in the best commercial cold expressed oil does not exceed 1·0 per cent., but much larger percentages are met with in some commercial oils unfit for lubrication.

The very wide range of **specific gravity** values in Table LXXIX. on p. 250 can probably be narrowed down to 0·916–0·919 for lubricating oil, the **saponification value** to 18·7–19·1 per cent., and the **iodine value** to about 84·5–95, but a larger number of samples needs examination before definite limits for these values can be fixed.

The best test that can be made in the examination of a sample of arachis oil is a determination of the percentage of **crude arachidic acid** by the method described on p. 344, as this acid is present in comparatively large and fairly constant quantity, and no oil likely to be added as an adulterant, except rape and mustard oils, is known to contain it, and in these the quantity is very much less than in arachis oil. Tortelli and Ruggeri found the following percentages of crude arachidic acid in arachis oils from different sources :—

Description of Arachis Oil.	Crude Arachidic Acid ; per cent.	M. p. ; °C.
Buenos Ayres, expressed at 45° to 50°. .	5·24	74·4–74·7
Buenos Ayres, extracted with ether, . .	4·92	74·2–74·8
Ruffisque, extra, 1st pressing, . . .	4·31	74·2–74·6
Ruffisque, fine, 2d pressing, . . .	4·55	74·4–75·2
Gambia, extra, 1st pressing, . . .	4·59	74·5–75·1
French (commercial oil), ...	5·33	74·1–74·4
Spanish (commercial oil), ...	5·40	74·3–75·4

Sesamé oil should always be looked for in arachis oil, as it is frequently present in large quantity, and is very objectionable in arachis oil intended for lubricating purposes, on account of its marked drying properties. Sesamé oil can be readily detected by the furfural reaction. Its presence would tend to raise the specific gravity, also the iodine value, Maumené thermal value, and oleo-refractometer value of arachis oil. Sesamé oil contains more linolic acid than arachis oil.

Poppy oil would raise the specific gravity, iodine value, Maumené thermal value, and oleo-refractometer value of arachis oil, and would lower the solidification point of the oil and of its mixed fatty acids, as well as increase the tendency of the oil to gum by oxidation.

Cottonseed oil would probably be detected by Halphen's colour test, also by the much higher iodine value of its liquid fatty acids and much larger yield of tetrabromides.

Rape oil would tend to lower the saponification value and increase the viscosity of the oil.

Castor Oil.

Castor oil for lubricating should be clear, pale in colour, and as free as possible from acidity. The commercial oil should contain not more than 3 per cent. of free (oleic) acid.

For the detection of adulterants, advantage may be taken of the easy **solubility** of genuine castor oil in **alcohol**. Absolute alcohol dissolves castor oil in every proportion; 90 per cent. alcohol (sp. gr. 0·834) dissolves less, 1 volume of castor oil requiring from 2·4 to 2·94 volumes of 90 per cent. alcohol at 20° C. according to experiments by Itallie. A sample of genuine castor oil tested by Archbutt was perfectly soluble in 2 volumes of 90 per cent. alcohol at 15° C. Twenty-three samples of Indian castor oil, examined by Deering and Redwood, were completely soluble in 3 volumes of alcohol of sp. gr. 0·830 at 60° F. (15·5° C.). It appears, therefore, that castor oil, if genuine, should dissolve completely in 3 volumes of 90 per cent. alcohol at 20° C. It is usual, however, to employ 5 volumes of alcohol, as recommended in the *British Pharmacopœia* (1898); and we have found by experiment, with the sample of easily soluble castor oil referred to above, that when only 5 per cent. of either rape, blown rape, cottonseed, poppy, maize, or curcas oils were mixed with it, 5 volumes of 90 per cent. alcohol gave a strongly turbid mixture at 15° C., which deposited a small quantity of oil on standing. The following test, originally recommended by Finkener [1] (who used a slightly stronger alcohol), may therefore be employed with confidence as a rapid method of assay:

Measure exactly 10 c.c. of castor oil in a graduated, stoppered test cylinder, add 50 c.c. of alcohol (sp. gr. 0·834), and well mix. If genuine, a clear and bright solution will be obtained at 15° C. If as little as 5 per cent. of foreign oil be present, the liquid will remain strongly turbid even on warming to 20° C.

The **specific gravity** of castor oil should lie between 0·959 and 0·968, and is usually about 0·963 0·964. Adulteration with any other natural fatty oil or mixture of oils would lower the sp. gr.; and although this might be adjusted by the addition of rosin oil (sp. gr. 0·96 1·01), the presence of the latter would be easily detected by determining the amount and examining the properties of the unsaponifiable matter, which, in genuine castor oil, does not usually exceed 0·7 per cent. Blown rape or blown cottonseed oil might be added without altering the density, and without causing any appreciable increase of the unsaponifiable matter, but these oils would be detected by some of the following tests.

The **viscosity** of castor oil greatly exceeds that of any other natural fatty oil, but is approached by that of rosin oil and may be exceeded by that of blown oil. Twenty-three samples of Indian castor oil, tested by Deering and Redwood in the Redwood viscometer, required from 1160 to 1190 seconds for the outflow of 50 c.c. at 100° F.

The **acetyl value** of castor oil (14·6 to 15·1 per cent.) exceeds that of any other known oil, and is one of the most valuable indications of its purity. Although blown oils also have high acetyl values, they do not nearly approach castor oil in this respect (see pp. 324, 326), and the detection of 10 per cent. of blown oil in castor oil is possible. Grapeseed oil, if present in castor oil, would lower the specific gravity.

The **Hehner value** (95·3 to 95·5 per cent.) would be lowered by adulteration with blown oil, as would also the **iodine value** (81·4 to 90·6 per cent.); on the other hand, the **Reichert Meissl value** (1·1 to 4), the **Maumené thermal value** (54° to 66°), and the **saponification value** (17·6 to 18·7 per cent.) would be raised.

Among other possible adulterants mentioned by Allen, *poppyseed oil* would lower the specific gravity, acetyl value, and viscosity, and would raise the iodine value; *lard oil* would lower the oleo-refractometer reading, specific gravity, viscosity, acetyl and iodine values; *coconut oil* would lower the specific gravity and the Hehner and iodine values, and would raise the saponification value; and *seal oil* would lower the specific gravity, acetyl value, and viscosity, and would raise the iodine value. *Cottonseed* and *sesamé oils* would be detected by the characteristic colour tests for these oils.

Estimation of Castor Oil.—A method of estimating the percentage of castor oil in mixtures, dependent upon the insolubility of lead ricinoleate in petroleum ether, has been described by Lane (*Jour. Soc. Chem. Ind.*, xxvi. (1907), p. 597).

---

[1] *Chem. Zeit.*, x. 1500.

Palm Oil.

Palm oil is not, as a rule, adulterated with other fats, the chief impurities being free palmitic acid, dirt, and water. For grease-making, low acidity is of chief importance, as the dirt is strained off and the water settles out in melting. The **acidity** is determined by the method described on p. 295, and should be neutralised by adding the necessary additional amount of soda in making the grease. The percentage of **dirt** and **water** can be estimated, roughly, by melting the sample in a 100-c.c. cylinder standing in a beaker of hot water, and reading off the volume of sediment which is deposited. If over 2 per cent., an allowance is usually made by the seller. In that case, a more accurate determination may be made by dissolving a weighed quantity of the well-mixed sample in ether, filtering, washing, evaporating the ether, drying the fat and weighing it; the difference between the weight of dry fat and the weight of the sample taken is water and dirt. *Water* may be separately estimated by heating 5–10 grms. of the sample in a tared beaker in an air-oven to a temperature of 110° C. until the water is expelled.

Analyses of 16 samples of palm oil by Tipler are given in Table XLVIII. on p. 152.

Palmnut and Coconut Oils. (Coconut "Oleine.")

The high **saponification** and **Reichert values** and the low **iodine values** of these oils are characteristic, and afford ready means of distinguishing them from other oils and fats.

Coconut oil is said not to be adulterated. If required for lubrication, the most important test would be the **determination** of **acidity.**

The characteristics of two samples of commercial coconut "oleine" are given on p. 153.

Tallow.

Tallow intended for lubrication, when melted in a test-tube, should be clear, and free from more than traces of suspended matter. **Water,** if present, can be estimated as directed on p. 380. **Suspended impurities** (membrane, etc.) can be estimated by dissolving a fair sample (10 to 20 grms.) of the tallow in ether or petroleum spirit, filtering through a weighed filter paper, washing out all fat with the hot solvent, and reweighing the paper and contents. The latter, if sufficient in amount, may then be examined for possible adulterants such as **starch, lime-soap,** etc. In genuine tallow, the percentage of insoluble matter rarely exceeds 0·2, and of water 1 to 1·5 (*Allen*).

The **acidity** should, of course, be as low as possible, and should not in any case exceed 4 per cent. of oleic acid. This would exclude such adulterants as distilled grease stearin and rosin.

The **saponification value** may range from 19·25 to 19·8 per cent., and averages about 19·5. Paraffin wax (saponification value, *nil*) would lower the value; palmnut and coconut oils (sap. value 24·6 to 26·8) would raise it; bone-fat, cottonseed stearin, and cottonseed oil are without effect upon this constant.

The **iodine value** of genuine tallow has been found to range from 34·8 (*Thoerner*, 32·7) to 47·5, according to published figures. We have met with apparently genuine tallow absorbing as much as 49·3 per cent. of iodine; possibly, but improbably, bone-fat or horse fat might have been present, but not cottonseed stearin or oil. The usual range is from 40 to 45. The range is about the same both for beef and mutton tallow, but the average is probably lower for the latter. Any tallow having an iodine value above 47 would be suspicious, and might contain cottonseed stearin (88·7 to 104), cottonseed oil (100·9 to 116·9), horse fat (71·4 to 86·3), or bone-fat (46·3 to 55·8). On the other hand, an abnormally low value, say below 38, might be due to the presence of paraffin wax (4), palmnut oil (10 to 17·5), or coconut oil (8·3 to 10). It is obvious that a mixture of the above fats and oils in suitable proportions might be made which would have the same iodine value as genuine tallow.

Cottonseed stearin and cottonseed oil, which are the most frequent adulterants of tallow, can, if present, be detected by the Halphen and Milliau **colour reactions** (unless they have been previously treated so as not to give these reactions). Pure fresh tallow gives entirely negative results. (Note, however, Bevan's and others' observations with lard, p. 347.) The nitric acid colour test (p. 348) would still be available, but the results must be interpreted with caution. Allen states that tallow which has not been washed and purified, and which, therefore, contains particles of blood, acquires a light brown colour when agitated in a melted state with nitric acid of 1·38 sp. gr.

To prove the presence of cottonseed oil or stearin, L. Mayer recommends an examination of the "oleine" obtained by allowing the melted tallow to crystallise for eighteen hours at 35° C. and then squeezing the liquid portion through filter cloth. The iodine value of this should not exceed 55 if the tallow be genuine, but in presence of cottonseed oil or cottonseed stearin a much higher result will be obtained. As an alternative test, the *iodine value of the liquid fatty acids* might be determined, those from tallow absorbing 92–93 per cent. of iodine, whilst the liquid acids from cottonseed oil absorb nearly 150 per cent. The solidifying-point (titer test) of the fatty acids should also be determined; in the presence of the above-named adulterants it will be lower than 39° C. The phytosterol acetate test should also be applied (see p. 310).

Bone-fat leaves a variable but considerable proportion of ash on ignition. In 5 samples examined by Valenta the amount of ash ranged from 0·11 to 2·01 per cent.; average 1·32. This ash contains much calcium carbonate and oxide. As pure tallow and most, if not all other vegetable and animal fats leave a scarcely weighable trace of ash, the detection of bone-fat should not be difficult. Commercial bone-fat, according to Valenta's analyses, always contains a large percentage of free fatty acids (14·8 to 26·5); adulteration with any quantity of such bone-fat would be excluded by the 4 per cent. limit for acidity. Neutral bone-fat has the characters of a good lubricant. Bone oil (bone-fat oleine) is said to be used for lubricating clocks and watches.

Horse fat would probably communicate a yellow colour to tallow, would tend to make it soft, and would lower the melting-point of the fatty acids. This fat (as well as the above-mentioned) would lower the specific gravity of tallow at 60° F., which, however, is very rarely determined. Horse fat contains no stearin. It has marked drying characters, and the intense yellow colour of ethereal solutions of the unsaponifiable matter is characteristic.[1]

Paraffin-wax, which is sometimes added to soft tallow, and usually reveals its presence by reducing the saponification value, can be estimated by determining the unsaponifiable matter, which, in genuine tallow, does not exceed 0·4 to 0·6 per cent. The same process would enable *rosin oil,* if present, to be detected, and also *wool fat.*

Palmnut and *coconut oils,* besides raising the saponification value (which no other likely adulterant would do), would increase the Reichert value and reduce the Hehner value. The commercial oils, which are usually very acid, would be excluded by the acidity test.

---

[1] Dunlop, *Analyst,* xxxii. (1907), p. 317.

Valuation of Tallow.—By the soap- and candle-maker tallow is valued by the results of Dalican's titer-test (see p. 272). The "titer" (*i.e.* the solidifying-point of the mixed fatty acids) of tallow intended for candle-making should not be below 44° C.; tallow of lower titer is used for soap-making (*Lewkowitsch*). The titer of tallow used for making railway axle grease is not of great importance, so long as it does not fall below 41° C.

Tallow Oil.

Few analytical data have been published for this oil. Allen gives the **specific gravity** at 60° F. as 0·916, and the **solidifying-point** as 0° to +6° C. (32° to 43° F.). The oil should contain very little free fatty acid, and, if genuine, should have an **iodine value** of, probably, 55 to 60. Three samples examined by Gill and Rowe[1] gave results as follows:

Sp. gr. at 100° C., ...	0·794
Titer test, ...	35°–36° to 36·5°–37·5°
Maumené test (100 per cent. H_2SO_4 used),	35°
Iodine value, ...	55·8° to 56·7°
Iodine value of mixed fatty acids, . .	54·6° to 57·0°

"*Ox oil*" should be tallow oil expressed from beef tallow. "*Animal oil*" might contain the fat of other animals. Two samples of refined animal oil examined by one of the authors had a sp. gr. of 0·9187 at 60° F., iodine values of 59·7 and 60·4, and saponification values of 19·35 and 19·96 per cent. On cooling to 50° F., no crystals formed in three hours; but on lowering the temperature to 46° F., crystallisation commenced, and slowly continued until the oil ceased to flow on inclining the tube. The low percentage of acidity (0·25 per cent.) and the high viscosity (nearly equal to that of rape oil) of the samples were noteworthy features. In Maumené's test, using 97 per cent. H_2SO_4, readings of 42·5° and 40·5° were obtained.

Eight samples of animal oil, believed to be genuine, examined by Dunlop,[2] had iodine values ranging from 66·3 to 77·6 and sp. grs. (15·5°) from 0·914 to 0·9165. The efflux time of 50 c.c. from Redwood's viscometer at 70° F. ranged from 330 to 460 seconds. Dunlop states that oils of this character are far from common, and that out of over 40 samples of commercial animal oil tested by him, at least half had sp. grs. of 0·9170 to 0·9215 and iodine values of 90 to 116. Many of these oils were adulterated with seed or fish oils and had marked drying properties, unfitting them for lubrication; others of lower sp. gr. were adulterated with mineral oil. The amount of free fatty acid ranged from 0·70 to 22·0 per cent. The Zeiss butyro-refractometer is useful as a sorting test; a reading higher than 61 at 25° C. indicates either a high iodine value or the presence of mineral oil.

Dunlop points out that a high iodine value may be due to the presence of horse oil, four samples of which he prepared from the fat obtained from different parts of the horse. These oils ranged in iodine value from 90 to 115, in sp. gr. at 15·5° C. from 0·9182 to 0·9212, were lower in viscosity than the genuine animal oils, and had objectionable drying properties. To decide whether a high iodine value is due to the presence of horse oil or seed oil, the phytosterol acetate test would be necessary.

To test the drying property of tallow oil, Dunlop recommends exposing 2 drops on a quarter-plate negative glass for twenty-four hours to a temperature of 95° to 97°. Genuine tallow, lard, or neatsfoot oil does not gum to any appreci-

---

[1] *Jour. Amer. Chem. Soc.*, xxiv. (1902), p. 466.

[2] *Analyst*, xxxii. (1907), p. 319.

able extent under these conditions, but many "animal oils" of higher sp. gr. than 0·9170 gave sticky films. Hehner and Mitchell's bromo-glyceride test[1] also gives valuable information, even when used qualitatively, since genuine tallow and lard oils give little or no deposit, while the presence of even 5 per cent. of whale or similar oil is indicated by a very distinct precipitate of the bromide compound.

Lard Oil.

The **acidity** of lard oil, calculated as oleic acid, should not exceed 2 per cent. Of 47 samples tested by Jenkins,[2] 40 satisfied this condition, and the average acidity of the whole was 1·56 per cent.

10 samples contained between 0 and 1 per cent.
30 ,, ,, ,, 1 ,, 2 ,,
5 ,, ,, ,, 2 ,, 3 ,,
2 ,, ,, ,, 4 ,, 6 ,,

Of 14 samples examined by Archbutt—

1 sample contained 0·85 per cent.
11 ,, ,, from 1 to 2 per cent.
2 ,, ,, 6·7 per cent.

Four samples examined by Tolman and Munson contained from 0·28 to 1·28, and four by Sherman and Snell from 0·74 to 2·64 per cent. of free oleic acid.

The **specific gravity** of genuine American lard oil at 60° F. ranges from 0·913 to 0·919, according to Schweitzer and Lungwitz,[3] and the results published by other chemists fall within these limits. Of 47 samples of commercial lard oil examined by Jenkins and believed to be genuine, only one sample had a higher sp. gr. (0·921); the remainder ranged from 0·914 to 0·919, the average being 0·9172. Adulterants, such as cottonseed oil, maize oil, and fish oils, would raise the sp. gr.

The **Maumené thermal value** (determined as described on p. 336) ranges from 40° to 46°, practically the same as in the case of olive oil. This is, therefore, a very valuable test, since most oils likely to be added as adulterants, except mineral oil, would increase the temperature reaction.

The **oleo-refractometer** is a valuable instrument for examining lard oil, the recorded deviation caused by which ranges from $-1°$ to $+5·5°$. All fatty oils likely to be added as adulterants, except arachis, neatsfoot, and tallow oils, would increase the refraction.

The average **viscosity** of commercial lard oil is about the same as that of olive oil, but it varies between rather wide limits. The efflux time of 45 samples examined by Jenkins ranged from 356 to 534 seconds for 50 c.c. at 60° F. from Redwood's viscometer, the average being 437 seconds. Olive oil from the same viscometer at 15·5° required 426 seconds. The majority of the samples fell within a narrower range, as is shown below:

6 required from 356–399 seconds.
9 ,, ,, 400–422·5 ,,
17 ,, ,, 427–449 ,,
7 ,, ,, 451–466 ,,
3 ,, ,, 477–495 ,,
3 ,, ,, 508–534 ,,

---

[1] Allen's *Comm. Org. Anal.*, 4th edition, 1910, ii. 28.
[2] Private communication.
[3] *Jour Soc. Chem. Ind.*, xiv. (1895), p. 129.

The **iodine value** of genuine lard oil varies considerably, owing to the variable proportion of olein. The interpretation to be placed upon the result of this test must, therefore, depend upon the congealing-point of the oil. Schweitzer and Lungwitz, who have investigated this relation, determine the congealing-point as follows: the oil is poured into a wide-mouthed bottle, immersed in a freezing-mixture of ice and salt, and stirred vigorously with a thermometer; the temperature is noted at which the oil shows the first sign of becoming cloudy. Any lard oil with higher iodine value than 70 should not show signs of cloudiness above 40° F. The lard oils having iodine values of from 60 to 64 are generally pasty at 40° F.

The following table is taken from Schweitzer and Lungwitz' paper:—

Sp. gr. at 15°/4°.	Iodine value.	Congealing-point.
0·9136	78·8	25° F.
0·9146	76·4	28° F.
0·9174	76·0	28° F.
0·9151	71·5	35° F.
0·9159	67·8	40° F.
0·9160	63·9	42° F.
0·9186	62·8	Solid at 40° F.

Probably the iodine values of most genuine lard oils would fall between 67 and 82.

The **saponification value** of genuine lard oil is about 19·3 to 19·8. Adulteration with rosin oil, mineral oil, or rape oil would lower the value.

Rosin oil or mineral oil, if present, would be detected and estimated by isolating the **unsaponifiable matter,** which in genuine lard oil does not exceed about 0·6 per cent.

The **flash-point** (closed test) of a genuine sample of lard oil was found by Jenkins to be 480° F.

The **titer test** of the mixed fatty acids ranged from 27° C. to 33° C. in 46 samples examined by Jenkins, and Duyk[1] found the sp. gr. at 100° C. to be 0·885.

Four samples of genuine lard oil examined by Tolman and Munson (*Bull.* No. 77, United States Dept. of Agriculture) gave the following results:—

	1.	2.	3.	4.
Sp. gr. at 15·5° C., . .	0·9148	0·9145	0·9160	0·9175
Butyro-refractometer reading at 15·5° C., . . .	67·4	67·4	69·5	66·8
Saponification value, per cent.	19·57	19·53	19·77	19·62
Iodine value, . . .	75·9	77·2	69·7	72·5
Iodine value of liquid fatty acids { estimated,	94·0	...	95·8	93·9
Iodine value of liquid fatty acids { calculated,	98·9	101·3	101·3	97·9
Solid fatty acids, per cent., .	18·9	19·3	26·68	21·43
M. p. of mixed fatty acids, °C.	33·2°	34·2°	38·4°	35·8°
Free (oleic) acid, per cent., .	0·75	0·78	0·28	1·28

Cottonseed oil would probably be detected by Halphen's or Milliau's **colour tests**; sesamé oil by the furfural test. Vegetable oils, as a class, would be detected by the phytosterol acetate test (p. 310).

---

[1] *Bull. de l'Assoc. Belge,* 1901, xv. 18.

Genuine lard oil contains no arachidic or lignoceric acids; therefore, if these acids be found by **Renard's process** (p. 339), either earthnut oil, rape oil, or mustard-seed oil must be present.

Hehner and Mitchell's bromoglyceride test[1] would prove the presence of **fish oils or linseed oil.**

The oxidation test described under "Olive Oil" is usefully applied to lard oil intended for lubricating.

Neatsfoot Oil.

Commercial neatsfoot oil may include oil from the feet of sheep, pigs, horses, and other animals, and is liable to extensive adulteration with vegetable oils, fish oils, bone oil, mineral oils, and, doubtless, rosin oil. When properly prepared from fresh feet, this oil contains less than 0·5 per cent. of **free fatty acid**; but the commercial oil, owing either to adulteration or to carelessness in manufacture, sometimes contains a very large percentage of acidity. According to E. Grant Hooper,[2] as much as 34 per cent. of free oleic acid has been found.

The most complete investigation of this oil has been made by Coste and Shelbourn,[3] who prepared a number of samples in the laboratory from the feet of different breeds of oxen and from a calf's feet. A summary of their results is given in the following table, together with some results by other authorities with commercial oils believed to be genuine:—

	Coste and Shelbourn. Oil prepared in laboratory	Gill and Rowe. American oil. 5 samples.	Lythgoe. American oil. 4 samples.	Holde and Strange. 10 genuine oils.
Sp. gr. at 15·5° C.,	0·9151–0·9181	0·914–0·919	0·9133–0·9148	..
Butyro-refractometer, 20° C.,	63·0–64·6	..	63·3–63·6	..
Saponification value, per cent.,	19·36–19·97	..	..	19·6–19·9
Iodine value,	66·4–73·1	67·1–72·9	71·3–73·0	66–74
Hehner value,	94·8–95·9	..	..	..
Reichert-Meissl value,	0·9–1·2	..	..	..
Maumené test (100 per cent. acid used),	..	42·2°–49·5°	..	..
Unsaponifiable matter,	0·12–0·65	..	..	..
Mixed Fatty Acids				
Sp. gr. at 100°/100° C,	0·8718–0·8739	..	..	..
Titer test,	16°–26·5° C.	..	..	..
Solidifying-point, °C.,	24·5–29·2	..	..	..
Neutralisation value,	193·4–206·3	..	..	..
Iodine value,	71·0–77·0	63·6–69·5	..	..

The **oleo-refractometer** should be of great value in examining samples of neatsfoot oil. The presence of seed oils and fish oils would be readily detected by its means. Sheep's-foot oil is the standard oil used in this instrument.

Seed oils, such as cottonseed and maize, also fish oils, would raise the **specific gravity, iodine value,** and **Maumené value.** Rape oil would reduce the saponification value. Bone oil would most likely be detected by determining the ash. Cottonseed oil would probably be detected by Halphen's and Milliau's **colour tests**; sesamé oil by the furfural test; and vegetable oils, generally, by the phytosterol acetate test (p. 310).

Mineral oil and rosin oil would be found in the unsaponifiable matter, which in genuine neatsfoot oil does not exceed 0·7 per cent.

---

[1] Allen's *Com. Org. Anal.*, 4th edition, 1910, ii. 28.

[2] *Jour. Soc. Chem. Ind.*, xvii. (1898), p. 5.

[3] *Ibid.*, 1903, xxii. 775.

Sperm Oil.

No means of distinguishing Southern and Arctic sperm oils, except by the smell and appearance, much less of detecting one when mixed with the other, can be said to be known. The most important difference between the oils appears to consist in the respective **melting-points of the mixed fatty acids,** but a sufficient number of authentic samples of each oil has not been examined to ascertain what this difference really amounts to. No difference exists in the refractometer values, Pearmain's figure +50 for Arctic sperm oil being obviously wrong. Samples of the two oils kindly examined for us by the late W. Chattaway in Jean's oleo-refractometer gave an identical reading of −13. For the two samples referred to we were indebted to Mr. J. F. Ingleby of Hull, and it may be of interest to give here the complete results of the examination of these samples.

TABLE CXXXV.

Description	1. Finest Southern Sperm Oil.	2. Deodorized Arctic Sperm Oil.
Colour, ...	Dark golden yellow.	Golden yellow; paler than No. 1.
Odour, ...	Slight fishy.	Fishy; more pungent than No. 1.
Specific gravity at 60° F. (15·5° C.), .	0·8809	0·8787
Viscosity (poises) at 60° F. (15·5° C.), .	0·3915	0·4148
Freezing-point, ...	Both practically 'set' in ice at 32° F. (0° C.)	
Refractometer value at 22° C., . .	−13	−13
Free acid, as oleic acid, %, . . .	1·2	1·6
Saponification value, %, . . .	12·00	12·50
Iodine value, %, ...	84·4	81·5
Maumené thermal value; 50 grms. oil, 10 c.c. of 97% sulphuric acid; ° C., .	46·0°	44·8°
Unsaponifiable matter (mixed alcohols), %	39 1	39·7
Mixed Fatty Acids.		
Melting-point (Bach's method), ° C., .	21·4°	16·1°
Solidifying-point (Bach's method), ° C.,	16·1°	10·0°
Mixed Alcohols.		
Colour, ...	Nearly white.	Nearly white.
Saponification value of acetylated product, %,	18·49	18·62

The results in Table CXXXVI. have been published by Dunlop.[1]

The problem, therefore, of detecting Arctic sperm oil in Southern sperm oil being, for the present at any rate, insoluble by chemical methods, the two oils will be considered as identical in the following remarks.

The **specific gravity** of genuine sperm oil at 60° F. (15·5° C.) ranges from

---

[1] *Jour. Soc. Chem. Ind.*, xxvii. (1908), p. 64.

0·878 to 0·884, and would be raised by the addition of any fatty oil or fat; this could be corrected by the addition of light mineral oil, but not without lowering the **flash-point,** which is not lower than 400° F., as a rule, in the case of genuine sperm oil. In the absence of mineral oil, Dunlop considers that a sp. gr. within 0·875 and 0·882 will generally indicate a pure oil. Out of 93 samples of sperm oil tested by Veitch Wilson the flash-points (closed test) of only three samples were below 410° F., viz.: one sample 400° and two 390°. The others ranged from 410° to 485° F., and the averages were 457·5° F. for Southern sperm and 446·2° F. for Arctic sperm. There are pure mineral lubricating oils having the same specific gravity and viscosity as sperm oil, but their flash-points are lower than 400° F. Several samples of genuine sperm oil tested by Dunlop in Gray's apparatus flashed at 410° to 422° F. A mixture of sperm oil flashing at 416° F. with 5 per cent. of "0·865" Scotch mineral oil flashed at 361° F., and with 5 per cent. of "0·896" mineral oil at 392° F. A flash-point below 410° F. would be suspicious, and below 400° F. would indicate adulteration.

TABLE CXXXVI.

	Arctic Sperm Oil.		Southern Sperm Oil.	
	1.	2.	1.	2.
Sp. gr. at 60° F. (15·5° C.), . .	0·8806	0·8786	0·8791	0·8798
Butyro-refractometer reading at 25° C.,	54·6	55·2	55·3	54·6
Free (oleic) acid, per cent., . .	0·73	1·43	1·16	2·53
Saponification value, per cent., .	12·90	12·48	12·97	12·90
Iodine value, per cent, . .	88·75	82·80	84·35	84·37
Unsaponifiable matter (wax alcohols, etc.),	38·02	39·22	41·16	39·20

The low **saponification value** of sperm oil (12 to 13·7 per cent.) is characteristic, but is not to be relied upon as a test of purity, since a mixture of a cheaper fatty oil with mineral oil could be made to have the same value. Lobry De Bruyn has found, however, that in sperm oil adulterated with such a mixture the presence of mineral oil can be detected by *Holde's test* (p. 298), since the higher alcohols formed by saponifying sperm oil do not separate at once on adding water, but remain for a considerable time dissolved in the soap solution.

The most reliable means of detecting the adulteration of sperm oil is to isolate and examine the **unsaponifiable matter.** Genuine sperm oil yields from 36·3 to 41·5 per cent. of unsaponifiable matter, consisting entirely of wax alcohols easily soluble in cold rectified alcohol; if the unsaponifiable matter obtained from 5 grms. of a sample of sperm oil be normal in amount and completely soluble in 50 [1] c.c. of cold alcohol of sp. gr. 0·834, the sample is most probably genuine. For further information as to the properties of the wax alcohols from sperm oil, see Table CV. (p. 312); also p. 308. For the analysis of mixtures containing sperm oil and mineral oil, see p. 321.

Porpoise and Dolphin Jaw Oils.

The remarkably high **Reichert value** is sufficient of itself to identify these oils. The high **saponification value** and low **iodine value** are also characteristic. The results obtained by the examination of a sample of Kelley's watch oil are given on p. 158.

---

[1] Not less; see footnote on p. 308.

D.—BLOWN OR THICKENED OILS.

Blown rape oil and blown cottonseed oil ("lardine") are usually pale-coloured and extremely viscous oils having a nauseous odour. The only natural oil which they at all resemble is castor, and from it they are easily distinguished by their sparing solubility in alcohol. 1–2 c.c. of castor oil, if shaken in a test tube with 10 c.c. of 90 per cent. alcohol, will dissolve easily, but the same quantity of blown oil remains apparently insoluble.

For the detection of blown oils in castor oil, see *Castor Oil* (p. 395). For their recognition when mixed with mineral oil, the following characteristics are available, viz.: the dark colour produced on saponifying them with alcoholic potash solution; the high specific gravity at $\frac{100^\circ}{100^\circ}$ C. of their insoluble fatty acids (p. 251); the considerable proportion of soluble non-volatile acids formed by their saponification (pp. 159–163); their comparatively low iodine value; and the high acetyl value of their insoluble fatty acids (see pp. 331 and 324). The soluble non-volatile acids were determined by Thomson and Ballantyne by collecting the filtrate and washings from the insoluble acids, distilling to dryness and extracting the dry residue with ether. After expelling the ether by evaporation, the acids were weighed and then titrated with standard alcoholic potash solution. For the Reichert-Meissl value of blown oils, see p. 319.

Blown oils have not been sufficiently investigated to enable data to be given for distinguishing them with certainty, one from another, and the problem of identifying the particular kind of oil from which a blown oil has been prepared is very difficult if not impossible to solve in many cases, especially in view of the fact that different results are obtained if the method of blowing the oil is changed (see C. H. Thomson's results on p. 162). In this connection the information and tables on pp. 158–164 may, however, be consulted. Blown cottonseed oil may be recognised by the high melting-point of the fatty acids (41° C.), and may also be distinguished from blown rape oil by its higher saponification value, provided the oils compared have reached the same or nearly the same degree of oxidation, and have been blown under the same conditions. Thomson and Ballantyne found, by laboratory experiments with such widely different oils as rape and sperm, that the specific gravity and iodine value simultaneously rise and fall in almost exactly the same ratio during oxidation. C. H. Thomson, however, in his experiments on shark oil blown in bulk on a commercial scale found that although the constants and variables of the oil rise or fall simultaneously at each stage of the blowing, this does not take place at the same rate, so that there is no exact relationship between the rise in specific gravity, for example, and the rise in viscosity, or fall in iodine value.

Proctor and Holmes, in their experiments with a large number of different oils, also found the changes irregular. With all oils, the specific gravity and refractive index increased as oxygen was absorbed, and the iodine value diminished, but it appeared evident, as the experiments proceeded, that the different phenomena did not depend upon the same chemical or physical change in the fat, since it was found that one "constant" might alter in value whilst another remained stationary. Polymerisation changes, which undoubtedly take place, vary the refractive index and specific gravity, but probably do not affect the iodine value. Much further research is, in fact, necessary before reliable conclusions can be drawn from the ordinary data.

Marcusson[1] has proposed to distinguish between blown rape and cottonseed oils by determining the percentage of fatty acids whose lead salts are insoluble

---

[1] *Chem. Rev. Fett- u. Harz-Ind.*, 1905, xii. 290.

in ether, and the behaviour of these fatty acids towards petroleum ether. Some of his results are given in the following table:—

Description of Blown Oil.	Fatty Acids whose lead salts are insoluble in ether.		
	Total amount obtained, per cent of oil.	Soluble in petroleum ether, per cent.	Insoluble in petroleum ether, per cent.
Rape oil, commercial, . . .	1·2	...	...
" " "	14·5	5·7	8·8
" " prepared in laboratory .	20·6	8·7	11·9
Cottonseed oil, commercial, . .	32·9	23·3	9·6
" " prepared in laboratory,	45·8	32·5	13·3

The fatty acids from the ether-insoluble lead soaps of the blown cottonseed oil melted at 54°–56° C., whilst those from the blown rape oil were oily or semi-fluid.

Blown oils should be examined for acidity in the same manner as the oils they are made from. As stated on p. 159, the tendency of the blowing process is to increase the percentage of free acid.

E.—MIXED LUBRICANTS.

Mixed lubricants may be either oils or greases, and may or may not contain soap. For the detection of soap, see section W, p. 377.

I. **Mixed oils and greases free from soap** may contain mineral oil, rosin oil, or coal-tar oil, together with a fatty oil, fat, or wax; the fatty oil may be a blown oil. An approximate analysis may frequently be made by Gripper's method (section D, p. 302).

A more exact analysis may be made by isolating and weighing the unsaponifiable matter (section E, p. 302), and then determining its properties and nature (section F, p. 307). By recovering the mixed fatty acids from the soap solution, and submitting them to examination (section G, p. 312), the fatty ingredient of the mixture may frequently be identified. Obviously, the problem becomes simplified when the mixed oil is purchased to a specification stating what the nature and proportion of the component oils must be. For the analyses of mixtures containing sperm oil or wool fat and mineral oil, see p. 321.

II. **The analysis of oils and greases containing soap** may be conducted in the following manner:—

10 grms. of the sample are stirred with ether in a small beaker until dissolved or thoroughly disintegrated. The liquid is then rinsed with ether into a separating funnel and shaken several times, with 10 c.c. each time of hydrochloric acid (sp. gr. 1·10) to decompose all soaps and extract the bases. The ethereal liquid is then washed with water until free from acid.

Acid Extract.—This contains the metals existing as soaps, also as chalk, gypsum, and other fillers. It is first washed with a little ether to remove mechanically mixed oil, the ether being added to the main ethereal solution. The liquid is then placed in a beaker, covered with a clock-glass, and heated on a warm water-bath until the dissolved ether has boiled away. It is then poured into a basin, evaporated to dryness on a steam bath, redissolved in hydrochloric acid and water, filtered, and the metal or metals which were qualitatively detected in the ash may be estimated in the clear solution.

Ethereal Solution.—This contains the neutral oil (fatty and mineral), together with all fatty and rosin acids which existed free and in combination with metals as soap. In order to extract the fatty and rosin acids, the solution is shaken with 50 c.c. of a 2 per cent. solution of caustic soda (10 per cent. caustic soda solution, 20 c.c.; rectified spirit, 10 c.c.; water, to 100 c.c.). The shaking should be continued for half to one minute and be not too vigorous, lest an emulsion be formed. After separation has taken place, the soda solution is drawn off into another separator, and the ethereal solution is further shaken with 10 c.c. quantities of the dilute soda solution until all fatty acids are extracted: it is then washed several times with water. The mixed alkaline extract is first shaken with a little ether, which is added to the neutral ethereal solution; it is then acidified, and the liberated fatty (and rosin) acids are extracted with ether and weighed. The neutral ethereal solution is also evaporated and the residue weighed. We thus obtain:

(*a*) *Metallic oxides, existing as soap, etc.*

(*b*) *Fatty* (*and rosin*) *acids existing in the free state and as soap.*—Determine the *free fatty acid* in a portion of the original sample as directed in section A, p. 295; if worth while, deduct this amount from the total, and multiply the remainder by 0·97 to reduce to anhydrides; add the equivalent of metallic oxides; the sum is the amount of dry *soap*. *Rosin*, if detected by Liebermann's test, may be estimated by Twitchell's method. *Phenols*, from coal-tar oil, if present (very rarely), would have to be separated from the fatty and rosin acids by distillation with steam.

(*c*) *Residual* (*neutral*) *oil.*—This may contain any or all of the following: *mineral oil, rosin oil* (*coal-tar oil*), *fatty oil, wax*, and, possibly, *free wax alcohols*. It must be analysed as directed on p. 406, E 1.

In addition, the grease may contain:

(*d*) *Water.*—This is estimated as directed in section Z, p. 380.

(*e*) *Inorganic ingredients*, such as graphite, talc, china clay, etc. These will, for the most part, remain insoluble and be drawn off with the aqueous extract. They must be filtered off and examined separately.

(*f*) *Excess of base.*—This is detected and estimated by determining the combining weight of the fatty acids and ascertaining whether the amount of base found is more than sufficient to saturate them.

The following **alternative method** for the analysis of lime-soap thickened greases has been kindly communicated by Mr. L. Myddelton Nash. The same method, suitably modified, is applicable to soda-soap greases.

Dry 15 grms. of grease in tared dish over low Argand flame. Loss=**water.**

Extract with petroleum ether,[1] in Soxhlet, a weight of dried grease= 10 grms. of original (residual grease in dish can be decomposed with HCl, and fatty acids added to the amount obtained elsewhere for determination of combining weight). Extraction must be thorough, and it may be desirable to remove the extracted grease from Soxhlet, break up and re-extract, to remove the last traces. Extract=*Mineral oil, free fatty acid*, and *unsaponified fatty oil.* Evaporate off solvent, preferably finishing *in vacuo* to prevent loss of light mineral oil, and weigh. Determine **free fatty acid** by titration, using combining weight found later. Should there be no free fatty acid, boil a portion of original grease with neutral alcohol and test for free alkali with phenolphthalein. After titrating for free fatty acid, add excess of potash and saponify. Shake out with ethyl ether, evaporate, and weigh the **mineral oil.** Determine the sp. gr. and viscosity of this oil. Acidify the soap solution and again shake out with ether. Extract=free fatty acid, if any, and fatty

---

[1] This should be of A.R. quality, and of boiling range, say, 60°–80° C.

acid from unsaponified fatty oil. Deduct free fatty acid already found, if any, and calculate remainder to **neutral fatty oil.**

Boil 10 grms. of original grease with HCl and water. Extract with ethyl ether. Insoluble **inert mineral matter** (graphite, mineral fillers, etc.) will be found here and can be separated and weighed. Gypsum will be mainly in solution. The ethyl ether extract will give total fatty matter. Deduct petroleum ether extract already found, and the difference will be fatty acids combined with lime or other base as soap. Separate the fatty acids, add to them the fatty acids obtained from the petroleum ether residue, and determine the combining weight. Calculate the percentage of **lime (or other) soap** and of base combined with the fatty acids.

Incinerate 1 grm. of the grease and determine bases in the ash. Deduct from total bases the base present as soap—the remainder, if any, will be **free lime** or other base (if the grease be alkaline), or it may be calcium carbonate, gypsum, etc. If necessary, determine the insoluble ash **(graphite, china clay, etc.)** and its nature.

Report all the ingredients printed in heavy type.

A.S.T.M. Tentative Method of Analysis of Grease.[1]

The following is a summary of this method, which permits estimations sufficiently accurate for reference purposes of all the constituents likely to be covered by specifications, viz.: fillers and ash, soap bases, soap, fat, water, excess alkali or acid, petroleum products, and other unsaponifiable matter. No quantitative estimation of glycerol is included, but a qualitative test is outlined.

Weight of Sample taken for Analysis.—10–20 grms. is usually a convenient quantity of medium hard cup greases; of transmission and some other soft greases a larger sample, up to 30 grms., may be required.

Solvents.—The *petroleum ether* used must have an end point not higher than 200° F. (93·3° C.); and 125 c.c., boiled for 1½ hours under reflux with 10 c.c. N/2 alcoholic potash, and 50 c.c. neutral 50 per cent. alcohol, cooled, and titrated with N/2 hydrochloric acid and phenolphthalein, must require not less than 9·8 c.c. of the acid for neutralisation. *Concentrated hydrochloric acid* is concentrated c.p. HCl. 10 *per cent. hydrochloric acid* contains 10 per cent. by weight of absolute HCl, ± 0·5 per cent.

Method 1.—Applicable to cup, fibre, and sponge greases, with or without graphite, and all comparatively pale-coloured greases, including axle greases.

Procedure 1. *No fillers present.*—The weighed quantity of grease is thoroughly decomposed by shaking in a separator with 50 c.c. of 10 per cent. hydrochloric acid and 75 c.c. of petroleum ether, and the liquid is allowed to separate into two clear layers.

Aqueous layer A.—Contains soap bases and possibly glycerol. Draw off into a separator, wash twice with 20 c.c. of petroleum ether, and add washings to B. If desired to search for glycerol, neutralise with solid Na_2CO_3, add sufficient excess Na_2CO_3 to precipitate lime and other bases, evaporate dry, extract with strong alcohol, filter, and apply suitable tests for **glycerol** to the alcoholic filtrate, after evaporating off the alcohol. If glycerol be found, the total of other ingredients should be less than 100.

Petroleum ether layer B.—Wash three times, with 25 c.c. of water each time, to remove HCl, and add washings to A. Then add petroleum ether washings from A, first washing these with a little water, which is rejected. If the liquid is pale coloured, an approximate estimate of the percentage of

---

[1] *Tentative Method D*, 128–24 T. American Society for Testing Materials, 1315 Spruce Street, Philadelphia, Pa., 1925.

free fatty acid may be made by titrating with N/2 alcoholic potash, using 200 per mille as the average neutralisation value; then add a little more alkali. If the liquid is too dark in colour for titration, add a few drops of phenolphthalein and sufficient N/2 alcoholic potash to make distinctly alkaline after vigorous shaking. Allow the liquids to separate.

Alcoholic layer C.—Draw off into a separator and add alcoholic washings from D. Wash with 25 c.c. of petroleum ether. Draw off into a beaker, evaporate to a small volume to expel alcohol, and rinse into a separator with hot water. Add the petroleum ether washings to D. Acidify the alkaline liquid with HCl and shake out twice with 50 c.c. and 25 c.c., respectively, of ethyl ether. Run off aqueous liquid and discard. Wash ethereal solution twice with 20 c.c. of water each time, and discard washings. Evaporate off ether, dry, and weigh the residual *free fatty acid and fatty acid from soap.* Determine the neutralisation value of this. From the total fatty acid found here, deduct the free fatty acid, if any, found as directed in a later paragraph, and calculate the remainder to percentage of **soap**, using the ash analysis as a guide in distributing the bases, if more than one is present. The fatty acids may be identified to some extent by such special tests as odour, crystal form, melting-point, iodine value, neutralisation value, colour reactions, etc. If the grease is appreciably oxidised, the fatty acid obtained may be dark in colour and hard to identify. In such case, the neutralised acids may be extracted again (qualitatively) with dilute HCl and petroleum ether, thus eliminating the small amount of more darkly coloured matter.

Petroleum ether layer D.—Wash three times with 30, 25, and 20 c.c., respectively, of neutral 50 per cent. alcohol and add washings to C. Add the petroleum ether washings from C. This solution will now contain the *free fat, petroleum oils and other unsaponifiable matter.* Concentrate to a volume of about 125 c.c. in a 300-c.c. Erlenmeyer flask, add 10 c.c. of N/2 alcoholic potash and 50 c.c. of strong, neutral alcohol, and boil under reflux for 1½ hours to saponify the free fat. Titrate the excess of alkali with N/2 hydrochloric acid and calculate percentage of **free fat,** using 195 per mille as the average saponification value. Transfer the liquids to a separator and allow to separate completely.

Alcoholic layer E.—Draw off into another separator and add alcoholic washings from F. Wash once with a little petroleum ether and add washings to F. Evaporate to a small volume and isolate fatty acids as directed in the case of alcoholic layer C. The percentage of fat may be checked by weighing and titrating the fatty acids found here.

Petroleum ether layer F.—Wash twice with 30 and 20 c.c., respectively, of 50 per cent. alcohol, and add washings to E. This solution and the petroleum ether washings from E contain all the hydrocarbon oil and unsaponifiable matter. Evaporate, dry, and weigh. Report as "**petroleum oils and unsaponifiable matter.**" If the grease contains rosin oil, beeswax, dégras, spermaceti, sperm oil, montan wax, candle-pitch, and other materials containing a large amount of unsaponifiable substances, special methods must be used for the examination and analysis of this residue. If petroleum oils alone are present, the specific gravity and viscosity may be determined.

Procedure 2. *Fillers present.*—The sample taken for analysis is weighed in a small beaker and thoroughly decomposed by warming with 50 c.c. of 10 per cent. hydrochloric acid, stirring until all soap lumps have disappeared and the upper oily layer is clear. The whole is then filtered through a Gooch crucible, provided with a suitable mat, and the beaker and filter thoroughly washed with water and petroleum ether. The clear, filtered liquids and washings are dealt with as directed in *Procedure* 1. The crucible and contents are washed finally with strong alcohol, the alcoholic washings being discarded, dried at 120° C. and weighed. The residue on the filter is reported as the percentage of **insoluble matter**, and may contain graphite, mica, talc, asbestos, gypsum, wood-pulp, etc. If gypsum be present as a filler, the results obtained by the above method will be low, owing to the solubility of gypsum in HCl. In that case, 5 grms. of the grease are decomposed with 25 c.c. of concentrated hydrochloric acid and 50 c.c. of petroleum ether, warming until all gypsum is dissolved. The liquid is then transferred to a separating funnel, and the lower acid layer drawn off and the SO_3 determined and weighed as $BaSO_4$, the quantity found being reported as **gypsum** ($CaSO_4.2H_2O$).

Method 2.—Applicable to dark greases, containing petroleum residuum, asphaltic base oils and asphalt, tars, etc., liable to cause troublesome emulsions if a shaking out process is used at the start. The sample taken for analysis is weighed in a 3-inch porcelain dish. 10 grms. of granulated acid potassium sulphate and 10 grms. of clean, dry, ignited sand are then added. The dish and contents are heated in a steam bath, with frequent stirring, until all water is driven off, two hours being usually sufficient. After cooling and breaking up the lumps with a small pestle, the mixture is transferred quantitatively to an extraction thimble, using a little petroleum ether to wash the last traces into the thimble, which should be previously placed in a Soxhlet apparatus. The thimble and contents are extracted thoroughly with petroleum ether, the extract concentrated somewhat if necessary, and the free fatty acid and fatty acid from soap titrated with N/2 alcoholic potash as in the case of the petroleum ether layer B in Method 1. From this point onwards the procedure is the same as that given in Method 1, Procedure 1. The contents of the thimble are extracted a second time with carbon disulphide, the extract evaporated to dryness, heated for one hour to 120° C. and weighed, the result being reported as **asphaltic and tarry matter**. The residue now remaining in the thimble is discarded.

Estimation of Free Alkali and Free Acid.—From 10 to 30 grms. of the grease are weighed in a small beaker, dissolved as completely as possible in 75 c.c. of petroleum ether by stirring, washed into a 250 c.c. Erlenmeyer flask with a small quantity of petroleum ether, and the beaker rinsed with 50 c.c. of 70 per cent. neutral alcohol, the alcohol being poured into the flask, after which a few drops of phenolphthalein solution are added and the whole shaken vigorously. If the alcoholic layer, after settling, is pink, 10 c.c. of N/2 hydrochloric acid are added, the solutions boiled for ten minutes to expel CO_2 and the excess acid titrated back with N/2 alcoholic potash. The free alkalinity is then calculated in terms of the predominating base.

If chalk or other alkaline earthy carbonate, or lead carbonate, is present as a filler, it will be detected by effervescence on adding the acid. In this case a sufficiency of N/2 HCl is added to decompose all the carbonate and leave a slight excess of acid. The solution is boiled to expel CO_2 and titrated back with N/2 alcoholic potash, and from the acid consumed its equivalent in $CaCO_3$, etc., is calculated, any other form of alkalinity which may be present being disregarded.

If the alcoholic layer is not pink, the solution is titrated carefully in the cold with N/2 alcoholic potash, shaking well after each addition. The acidity is calculated as oleic acid.

If soaps of iron, zinc, aluminium, or other weak bases are present, a determination of free acid is not possible.

Estimation of Water and Ash.—These estimations are made by methods which are essentially those described in Sections X and Z, Chapter VIII., pp. 378 and 380.

CHAPTER X.

THE FRICTIONAL TESTING OF LUBRICANTS, BEARING METALS, AND OTHER SURFACES.

ALTHOUGH a great deal of information can be obtained in the testing of lubricants by determinations of viscosity, specific gravity, volatility, flash-point, fire-point, cloud- and pour-points, etc., and by chemical tests, none of these tests measures the degree of "oiliness" or "greasiness" which a lubricant possesses, upon which its value as a means of reducing friction at low speeds and under high pressures so greatly depends. This property can only be measured by a friction-testing machine. The frictional resistance of a bearing is also due to what may be termed the unctuous nature of its surface; for each metal tested for slipperiness against itself, without any lubricant, gives a distinctive coefficient of static or boundary friction. The value of this coefficient can only be obtained by experiment with a mechanical testing machine.

Specially designed machines are also required for obtaining information in regard to the theory and practice of lubrication, those used by Beauchamp Tower, for example, having enabled Osborne Reynolds to place upon a firm basis the mathematical theory of viscous lubrication, with the result that the part played by the viscosity of the lubricant in the reduction of frictional resistance between cylindrical journals and their bearings is now clearly understood.

In this chapter we shall describe a few only of the most useful types of machine which have been designed for ordinary testing work, and the most important of those which have been used for experimental research work.

In using oil-testing machines it must be remembered that every change of speed, load, method of lubrication, temperature, form of bearing, condition and nature of rubbing surface (especially the latter) has some, frequently a considerable effect upon the frictional resistance obtained with each lubricant, and therefore that the problems arising in the course of such experimental work are often very intricate and difficult of solution. If, for instance, the oils in a series tested under small loads fall in a particular order of merit as regards friction-reducing power, on testing them with heavier loads the order may be found to have entirely altered. Changes of speed produce even more marked differences, sometimes increasing and sometimes decreasing friction. These points have been dealt with in some detail in Chapter III., on "The Friction of Clean Solid Surfaces and Surfaces covered by Adsorbed Films," and Chapter V., on "The Theory of Viscous Lubrication."

Frictional testing machines vary greatly, not only in the shape of their contact surfaces, but also as regards the indications which they give of the range in the value of the frictional resistances encountered, for the value of the static coefficient of friction may be as high as 0·9, and the value of the kinetic coefficient as low as 0·00075. In some machines, the rotating surface assumes the form of a wheel or drum upon which a bearing block is pressed.

In others it is a disc, the flat side of which is pressed against a similar disc, or against three small discs which revolve in a circle concentric with the larger disc. In the machines which have until recently been most commonly used, the contact surface takes the form of a cylindrical journal a few inches in diameter, upon which rests a weighted bearing block or brass. It has been shown that the conditions under which lubrication can be effected with cylindrical rotating surfaces are somewhat different from these which obtain with discs or other plane surfaces; but of late years bearings of the latter class have been designed so that they may take full advantage of inclined surface viscous friction.

We now have machines made to measure both the comparative oiliness of lubricants and the frictional results obtained with various forms of bearing when the speed is high and the lubrication is of the viscous or "perfect" type. It will be convenient to deal in the first place with machines and methods which give the static or boundary friction of adsorbed films, and then with those dealing with viscous lubrication.

For measuring the friction of adsorbed films, specially designed machines are necessary, as all the rubbing surfaces must be easy to get at and to clean, and they should be covered with sufficient oil to exclude the atmosphere. Many valuable results have been obtained with a weight resting upon a metal plate, the weight or slider being actuated by a loaded pan, attached to the slider by a fine thread working over a pulley. Although the apparatus is a very simple contrivance, for really scientific work it has to be enclosed in a glass case supplied with air freed by chemical means from all impurities. For practical work, however, the tests must be made in the open air, as all machines work in the open, and the lubricant must be suitable for open-air work.

As nearly all friction-testing machines must work in unpurified ordinary air, a chemical laboratory, unless very well ventilated, is unsuitable for friction-testing work. All surfaces are very susceptible to atmospheric pollution, especially chemical fumes, and all oil-testing work should be done in the cleanest atmosphere possible, if consistent results are desired. A special room for this work is, therefore, desirable.

It must be remembered that all kinds of bearing, if run extremely slowly, will give results due to the friction of adsorbed films, and for this reason machines such as Thurston's can be used for measuring oiliness; but it is far better to use a machine specially designed for such work.

Deeley's Adsorbed Film-Testing Machine.[1]—This machine was designed by R. M. Deeley previously to becoming a member of the Lubricants and Lubrication Inquiry Committee, appointed in 1917 by the Department of Scientific and Industrial Research "to prepare a memorandum on the field for research, containing an analysis of the problems involved, together with a suggested scheme of research which would be likely to lead to valuable results."[2] In the early days of the Committee's work, attention was called to the property of oiliness as one of the most important for investigation, and in order to provide means for measuring it, the particular form of testing machine presently to be described was used; for the property of oiliness shows itself most clearly when two metallic lubricated surfaces are in actual contact, and valuable results are obtained if the static frictional coefficients of various oils between different metals are measured. The utility of the machine depends upon the fact that when two lubricated surfaces are at rest and in close contact, the static friction or force

---

[1] Made by Messrs. J. H. Steward, Ltd., 406 Strand, London, W.C. 2.

[2] The Report of this Committee was published in 1920, and can be obtained from H.M. Stationery Office, price 2s. 6d.

required to cause movement depends upon the relative slipperiness of the surfaces. *The lower the static friction, the greater the oiliness or friction-reducing or wear-reducing value of the lubricant.* The machine is quite portable, takes up no more room than a viscometer, and can be worked by hand or by means of a small motor. It is made in two models, one, termed the Simplex Machine, intended for routine testing, and the other, the Laboratory Model, a more expensive and complex machine suitable for research work.

1. *The Simplex Machine* (figs. 119, 120, and 121).—This machine is so constructed that it enables the static friction between any desired metals to be easily and accurately ascertained by hand-power alone. If desired, it can be motor-driven (see p. 417). In fig. 119 the machine is shown in its working position; fig. 120 shows in plan the friction-indicating finger and scale, and fig. 121 the weight as it appears when removed from the machine. Essentially, the machine consists of two opposing surfaces, one (the lower) in the form of a plane disc about $3\frac{3}{8}$-inch diameter, and the other (the upper) consisting of three flat-ended studs, each $\frac{5}{32}$-inch diameter, spaced in a circle on the underside of the weight, free to rotate, and centred coaxially with the disc below. The lower disc rests in a circular pan, and can be flooded with the oil to be tested (see fig. 124 on p. 417). By means of a small operating handle the disc can be rotated slowly and steadily. The friction between the disc forming the lower surface and the three studs forming the upper surface rotates the weight to which the studs are attached. Two vertical pillars fixed to the weight

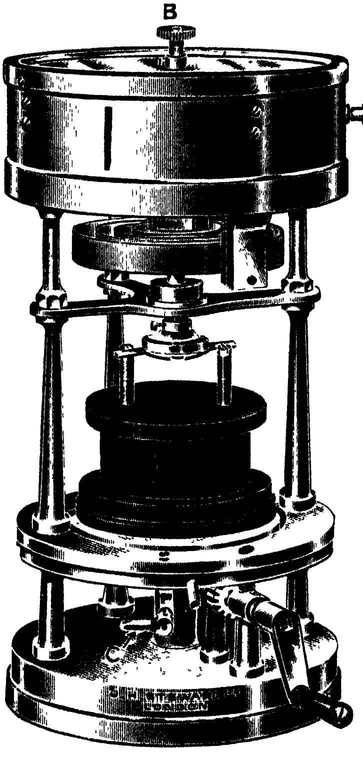

FIG. 119.

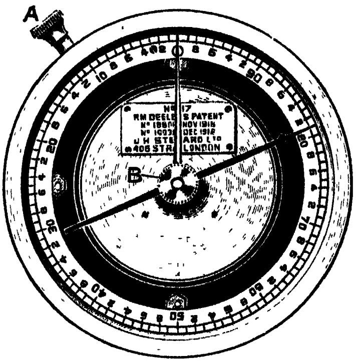

FIG. 120.

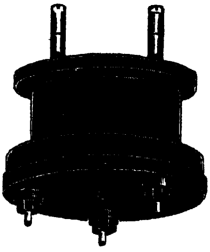

FIG. 121.

Simplex Model.

(fig. 121) engage in the cross-head of a torque measuring device. This consists of a spindle to which is attached a coiled spring. As the lower disc rotates, it carries round with it the three upper pegs and weight, and winds up the spring until the contact surfaces of the pegs and the disc below slip, and the static friction of the surfaces is balanced by the strain on the spring. The value of the stress producing the strain is measured by the fingers and scale in the upper glass-covered box (fig. 120).

When the pan is rotated, the spring is wound up by the friction of the surfaces, and the time comes when they slip; the finger then moves back towards zero. To indicate the position of the recording finger just before the surfaces slipped, a very light adjustable finger B (fig. 120) is poised above it, and when the recording finger moves back it leaves this light finger in position. When the operating handle is again gently turned, in the majority of instances, the fingers can be again moved and a higher reading obtained for the static coefficient.

Below the circular pan is a pawl C (fig. 119) engaging the cogs of the pan. By putting this in gear the fingers will not move back, except by the slipping of the surfaces, if the handle be released.

Zero Adjustment.—Means are provided for adjusting the fingers to the zero of the scale if the spring should alter its camber a little. Before adjusting the zero, the weight should be removed and the spring wound up by turning by hand the cross arm at the bottom of the main spindle until the finger registers about 50 on the scale. This will have the effect of causing the finger to return more accurately to zero after adjustment. By turning the button A (fig. 119), the scale is then rotated until the finger stands at zero.

Manipulation of the Machine.—The circular glass-covered box in which the scale and fingers are enclosed is supported on three pillars only. This leaves one side of the machine "open," to allow of the weight, the friction disc, and the pan being taken out. When the handle is turned, the pan and disc are rotated, and the three small studs and weight-frame are carried round with it by friction. The two pillars on the weight rotate the central spindle by means of a universal coupling, and wind up the main spring until the tension upon it is sufficient to cause the surfaces to slip. The stress causing the surfaces to slip is indicated by the fingers and scale below the glass plate. The scale registers arbitrary values between 0 and 100. *Before removing the weight, the fingers should be brought to zero by rotating the pan.*

Many metallic surfaces are not homogeneous in composition. Steel surfaces, for example, often vary in quality in different parts, and when this is the case, the static friction varies somewhat as the disc is rotated and the stud surfaces pass over places the unctuousness of which differ slightly. For this reason the lower disc supplied with the machine is made of cast iron, as also are the upper studs, this metal possessing the above objectionable features only to a slight extent.

Making a Test.—Before commencing to make a test, the following procedure may be adopted:—

Place the weight in position, with the surfaces of the studs and disc carefully cleaned as directed on p. 418, and *moistened* with the oil to be tested. Then rotate the disc several times. Oil is then poured into the dish until the disc is submerged about three-sixteenths of an inch by the lubricant. Then slowly rotate the pan with the gear provided. This should be done very *steadily and slowly*. When the finger slips back, rest a few seconds, and then rotate the pan again, to get a higher reading if possible. Sometimes, owing to the presence of a small particle of grit between the surfaces, the fingers are caused to indicate too high a friction, and rotating the pan does not move the fingers again. When this is the case, the pawl must be momentarily freed to allow the finger to fall back, the indicating finger moved, and the test repeated. A little experience and care will enable one to recognise when a proper reading is obtained. If, when slip takes place, the finger slips back towards zero rather rapidly, it is owing to the fact that *the surfaces have not been properly cleaned.*

Instead of the single weight, a weight-frame may be obtained, having ten weights, each of which gives 10 lbs. per square inch. When this is used it is well to test each oil with all the loads provided, as directed on p. 416, when using the Laboratory Model machine. As the Simplex machine is not fitted with a damping gear to prevent the rapid slip backwards which the finger sometimes makes when testing mineral oils with flat studs, it is advisable to use studs with rounded ends. With such studs, the coefficient of friction of slow motion is not so low as with flat studs, and the resistance to motion when slipping occurs is considerable. However, flat studs, except with small loads, give a coefficient of static friction two or three per cent. larger than do the round studs.

Coefficient of Friction.—As it is impossible to obtain all the mainsprings of the same size and temper, each machine is tested by the makers, and a factor obtained by which the arbitrary scale readings can be converted into coefficients of friction.

The following equation gives the coefficients of friction for any loads and readings:—

Factor of machine . =B (on small plate below glass).
Reading of test . . =C
Load per square inch . =A (engraved on weight).

$$\text{Coefficient of friction} = \frac{C \times 10}{B \times A}.$$

2. *Laboratory Model.*—With this machine experiments can be made on the part played by viscosity in slow frictional movements. It is fitted with a train of wheels, which steadies the finger when the pan is rotated rapidly. Under these conditions, even with slow rates of speed, a lubricating "pad" of oil is introduced between the surfaces, and comparatively low frictional results of a viscous character are obtained. For general experiments on the frictional peculiarities which distinguish *static friction* from *slow speed friction*, with varying loads, the train of steadying wheels is essential.

Fig. 122 shows the machine in its working position, with all the parts assembled for making a test. In fig. 124 the machine is seen with the weights, weight frame, and disc removed; the interior of the oil pan being visible, also the underside of the weight frame and studs, one stud being shown separately. Fig. 123 shows the friction-indicating fingers and scales.

Pawl and Ratchet.—In this machine the pawl and ratchet is fixed to the train of wheels provided for steadying the fingers, and can be thrown in and out of gear by means of the button B (fig. 123).

Zero Adjustment.—As two indicating fingers are provided, a means of bringing the small finger to zero is required. To effect this adjustment, the zero of the small scale should be dealt with first. This is accomplished by turning the inner thumbscrew D (fig. 122). The outer thumbscrew is for locking the arrangement after fixing the zero. The large thumbscrew works a pinion in a rack attached to the end of the spring. By turning the large button (after freeing the arrangement by slightly loosening the small thumbscrew) the spring is caused to rotate the main central spindle of the machine, thus actuating the whole train of wheels and moving the large as well as the small finger. When making this fine adjustment, it is advisable to gently tap the machine with the hand to free the parts. By turning the button A (fig. 122), the large scale is then rotated until the large finger also stands at zero.

Damping Gear.—To prevent the fingers from rapidly oscillating when slip takes place, the main spindle is steadied by a train of wheels, the end one of which runs in a mercury bath. The spindle of this floating end wheel carries a finger which rotates one hundred times as fast as the spindle to which the mainspring is attached. The mercury bath eliminates bearing friction, and, owing to its viscosity, steadies the movements of the fingers.

Mercury Seal.—The steel chamber holding the mercury and flywheel is so constructed that the machine may be laid on its side, or turned upside down, without any of the mercury escaping; but violent shaking may throw some of the mercury out. However, this could only occur when the machine is in transit by rail or cart, and a gear is added to prevent this. When the button C (fig. 122) is pressed in, it lifts the spindle carrying the small finger, and brings together two faces, the contact of which completely closes the only clearance space through which the mercury could escape, and at the same time fixes the recording fingers. The door of the case in which the machine is placed presses against the button C, and insures that when the machine is locked up it shall be in a safe condition to travel. When the machine is taken out of the case for use, this button C must be pulled out, to free the recording fingers.

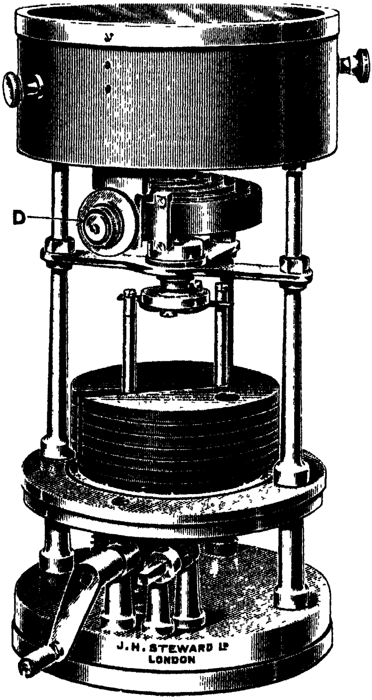

Fig. 122.

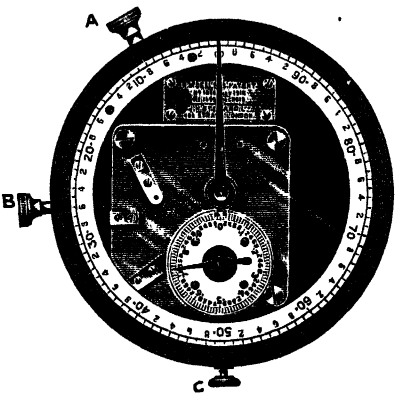

Fig. 123.

Laboratory Model.

It is well to test each oil with all the loads provided. The result of each test should be entered up as in Table CXXXVII., the readings obtained for loads of 20 lbs., 30 lbs., etc., being divided by 2, 3, etc., and the resulting figures entered as in column C. As the coefficient of friction is very nearly independent of the load, it can then be seen at once if, for some reason or other, erroneous results have been obtained, necessitating a retest. The sum of the figures in column C is then divided by ten times the factor of the machine, and this gives the mean static coefficient of friction.

TABLE CXXXVII.

A Load in lbs per sq inch	B Test Reading			C
10	10·9	1	=	10·9
20	20·8	2		10·4
30	30·0	3	—	10·0
40	40·8	4	=	10·2
50	54·0	5	—	10·8
60	63·6	6	—	10·6
70	70·7	7		10·1
80	85·6	8	=	10·7
90	92·7	9	—	10·3
100	105·0	10	—	10·5
	Factor of machine 37·11	10—371·1		104·5

=0·281 static coefficient.

It is advisable to make all tests in a room the temperature of which is about 60° F., with some oils there is a measurable variation in the static coefficient with change of temperature.

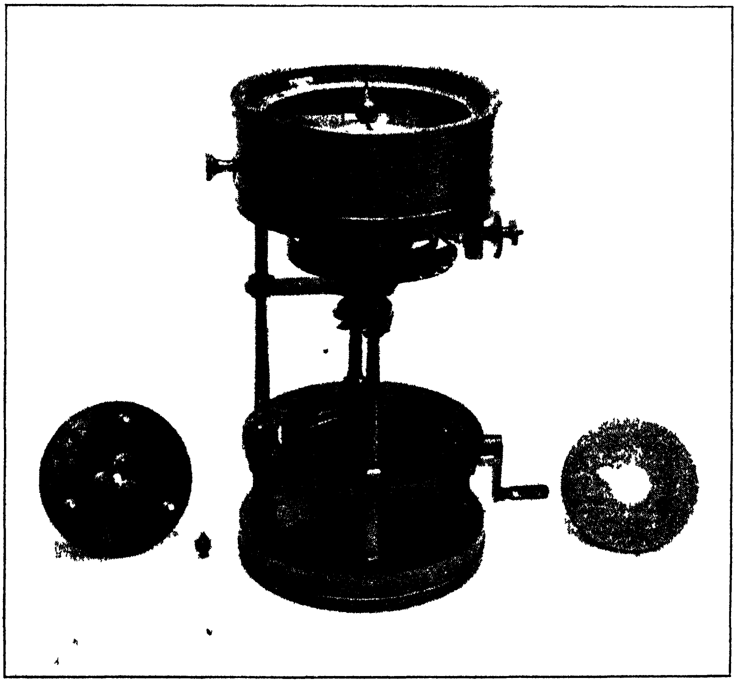

FIG. 124.

Motor Drive.—Although experiment shows that in some cases the coefficient of slow motion may be a little more or a little less than the static coefficient, with well-lubricated surfaces they are practically of the same value when the speed of rubbing is very small. The testing machines above described may, therefore, be driven by small motors at a speed of about five revolutions per minute, instead of by hand. When this is done, very concordant results are obtained, as after a time a steady state of friction results.

Cleaning the Surfaces.- The following remarks apply to both machines. They cannot be too carefully studied. When the metallic surfaces are wetted with lubricating oils they are somewhat troublesome to clean again, for a very thin film of the lubricant, or one of its constituents, adheres firmly to them. These films may be only one molecule thick, and their union with the surfaces may be in the nature of a chemical or physico-chemical combination of oil and metal. All surfaces, even if exposed only for a short time to the atmosphere, or handled, become contaminated with films of foreign matter, and these must be completely removed before testing an oil. Water adheres firmly to metallic surfaces, and may even displace a lubricant; so long, however, as any oil remains on such a surface, water will not readily touch it. This peculiarity may be used as a criterion for ascertaining whether the surface is free from substances which water will not wet, such as lubricating oils. Many metals and alloys, such as the bronzes and brasses, undergo chemical changes when exposed to the atmosphere- adherent films are formed on their surfaces, and water will wet them even when clean in other respects. When such films cover the friction surfaces, tests made with them do not give the static friction between lubricated metal and metal, but show the friction between lubrication films formed on them; and as such films may be abraded during the tests, and have static frictions peculiar to themselves, these films of oxide, etc., must be ground off. Cast-iron surfaces do not readily form such adherent chemical films by contact with the atmosphere, but are, of course, easily contaminated by oils, etc., and must be properly cleaned. To clean properly the surfaces for use, the following method, among others, may be employed:—

To clean the end surfaces of the studs, it is only necessary to wash them well in soap and water, rub their plane ends on a piece of clean paper placed on a flat surface, allow a stream of warm water to fall for a time upon them from a tap, until the water wets them, and then moisten them with the oil to be tested. The surfaces of the studs are supplied accurately ground to fit the disc below, and must not be filed or reground in any way. If the disc should become rusted or tarnished, it may be polished with fine Hubert 00 emery cloth. After well washing with soap and water, it is mounted on a drill spindle, as shown in fig. 125, and rotated beneath a stream of water from a tap, the point of the spindle resting upon a block of wood.

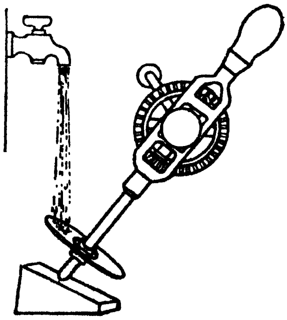

FIG. 125.

When the disc is quite clean, place it under hot water so as to heat it well. Then dry the disc with clean blotting-paper, or, preferably, chemical filter-paper. It will be noticed that although the disc is free from water it is somewhat tarnished. Oil the disc with a little of the lubricant to be tested, add a very little carborundum flour, and well polish the surface with the well-cleaned brass polisher provided. Then clean the disc with dry blotting-paper and rub off any remaining carborundum with oil and blotting paper. This process must be repeated until all carborundum has been removed. Again clean the disc with dry blotting-paper, place it in position in the pan, and put the weight in position. Then rotate the disc for a time, and again clean the surface of the disc and studs with slightly oiled blotting-paper. This should be repeated until the oiled blotting paper used for cleaning remains unstained. All traces of carborundum will then have been removed.

The importance of removing *every trace of carborundum and grit of any kind* cannot be too strongly insisted upon. With the Simplex machine, especially when testing mineral oils, the index finger lashes if the surfaces are not perfectly free from grit. For this reason, some operators have found it a good plan to again wash the *ground* surfaces with soap and water to remove the carborundum, then rinse first with alcohol and then with ether, and warm gently to remove every trace of ether, before putting on the oil.

Cleaning with Solvents.—An effective method of cleansing both discs and studs, which has much to recommend it owing to its simplicity, is that employed by the Research Staff of the Anglo-Mexican Petroleum Company, to whose kindness we are indebted for the details.

This method entirely does away with the necessity of washing with water, and obviates the continual use of carborundum, and the cleansing of both discs and studs is reduced to the absolute minimum of trouble. Tests of different oils which necessitate complete cleansing of pan, discs, and studs between the tests can be made within a very short interval of time. It is, of course, presumed that both the discs and studs have been ground plane, and that all trace of carborundum has been previously removed, and that no oxidation of the surfaces has taken place.

When the machine is not in use it is advisable to keep the pan filled with oil (preferably a mineral lubricating oil), and both discs and studs immersed in the bath of oil. By this means all access of air and moisture is prevented, and the surfaces of the disc and studs will only require cleaning to perform the test operation.

The process of cleaning includes four cleansings of pan, disc, and studs, the operation being the same for each part. The part is first wiped dry with a cloth, removing as far as possible any trace of the oil which may have been previously used or in which it may have been immersed. It is then washed twice with ordinary petrol, and then twice with petroleum ether, and finally wiped a few times with clean blotting-paper. Both the surfaces of disc and studs should not be handled after the final wiping, but should be immediately immersed in the oil.

The value given by the machine should be checked periodically by a determination on a sample of a standard oil which should be kept for the purpose. It is found at intervals that, owing to roughening of the surfaces, the value obtained is high. The surfaces then require regrinding, using a cork moistened with oil and some carborundum flour.

All traces of carborundum, after the ordinary washing and wiping, can be finally removed by heating the disc to about 180° F., having previously moistened the surface with a thin film of oil. The remnants of the flour, which may possibly be concealed in the small pits on the surface of the metal disc, will by this means be extruded and can be readily removed by wiping with clean blotting-paper.

Testing Semi-solid Lubricants.—When testing greases with these machines, the surfaces are prepared as for testing oils and then covered with a thin layer of the grease. It is found that studs with flat surfaces do not sink properly through the grease, confirming an observation made by Hardy. Studs with rounded ends (radius about 0·1 inch) are therefore used. After a time, these studs wear a small flat on their ends, and it may be necessary to have them reshaped or renewed. With some greases, it has been found that even the rounded studs do not thoroughly penetrate the grease film until the heavier weights are put on. In one case, the film was not penetrated until the fourth weight was put on (2400 lbs. per square inch); with heavier loads, up to 6000 lbs. per square inch, good readings were obtained.

In the case of the tests about to be described, made by J. J. Steward, the loads per square inch were about forty times greater than with the $\frac{5}{32}$-inch standard studs.

In the diagram (fig. 126) the curve A was obtained with a commercial wagon grease. It will be noticed that the value of μ with the smallest weight was high, the studs probably not having had time to penetrate the film. One might expect the value of μ to be lower the thicker the film, but W. B. Hardy has shown that this is not the case. With the higher loads, the frictions obtained were fairly regular in value. Another series of tests, made with the same oil and disc about eighteen hours after the first, gave about the same mean value for μ as before, if we omit the high first reading of the earlier test.

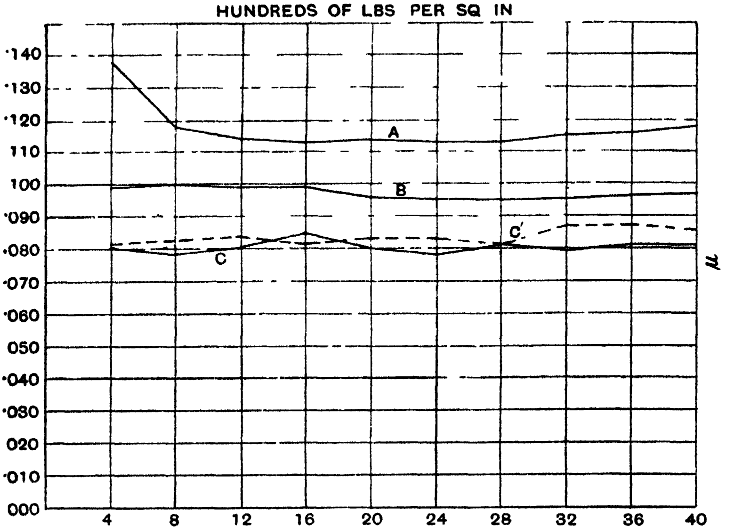

FIG. 126.

Curve B (fig. 126) shows the results obtained with another grease. Here the mean coefficient of static friction is smaller than with grease A, and the results are more uniform.

Another curve C (fig. 126) is that for lanolin. The full line C is the result obtained soon after the grease was put on the disc. The machine was then allowed to rest for eighteen hours, when curve C′ was obtained.

Judging by the experimental investigation into boundary friction made by Hardy, better results might be obtained in a pure atmosphere; but it must not be forgotten that all greases are liable to contain foreign matter, such as sand, hair, etc., in small if not large quantities, and these substances would tend to make the experimental figures high and irregular.

Hardy's Apparatus and Method.—The apparatus used by Sir W. B. Hardy and his collaborators[1] in their researches on static friction and boundary lubrication, which have been discussed in detail in the second and third chapters of this book, consisted of a sliding-piece, or slider, having a spherical or flat

---

[1] W. B. and J. K. Hardy, *Phil. Mag.*, **38** (1919), 32. W. B. Hardy, *Phil. Mag.*, **38** (1919), 49, and **40** (1920), 201. Hardy and Doubleday, *Roy. Soc. Proc.*, A, **100** (1922), 550; A, **101** (1922), 487; A, **104** (1923), 25.

surface, placed upon a plane surface, the plate, both surfaces being highly polished. From the middle of the slider a short stem projected, from which a fine thread passed over a light pulley to a light pan for holding weights. The thread was adjusted so that the pull on the slider was parallel to the plane surface. Both slider and plate were enclosed in a small chamber through which a current of air was passed, which had been purified by passing through vessels containing (in order) sulphuric acid, solid potash, calcium chloride, phosphorus pentoxide, and finally glass-wool. Three solids were used as friction surfaces, viz. glass, steel, and occasionally bismuth.

Glass plates were cleaned by first washing with soap and water, rinsing under the tap, and allowing to dry by draining. They were then heated for about half an hour in a solution of chromic oxide in sulphuric acid, rinsed thoroughly under the tap (the plate being held by clean tongs) and allowed to drain. During drainage, the lower edge of the plate rested upon two clean glass rods, the upper edge leaning against a clean glass bottle. The glass sliders (shaped like watch-glasses) being weighted with lead, could not be cleaned with chromic acid. They were, therefore, washed with soap and water, rubbed vigorously with the finger-tips under a rapid flow of water until the "clinging" state was reached, and suspended in air until dry. Steel plates and sliders were cleaned by washing with soap and water, rubbing vigorously with the finger-tips in a stream of tap water until water wetted the entire surface. rinsing with perfectly dry, pure alcohol, and allowing to drain in air. During the rinsing and draining processes the steel was not touched with the fingers at all, but was held in tongs which had previously been cleaned by strong heating. In all experiments, the coefficient of friction was given by the equation

$$\mu = \frac{\text{weight of pan} + \text{weights}}{\text{weight of slider}},$$

careful measurements having shown that μ was independent of the weight and curvature of the slider, except with very small loads.

Three methods of lubricating the surfaces were adopted in the case of liquids. Methods 2 and 3 are, of course, only applicable to liquids having sensible vapour pressures at the temperature of experiment, and not to ordinary lubricants.

(1) *By Flooding.*- A drop of lubricant was placed on the plate and the slider *placed in the drop.*

(2) *By primary Film.* A drop of lubricant is placed anywhere on the plate, *away from the slider*, and an invisible film spreads from it and covers the plate. To avoid evaporation in experiments by this method, the lower part of the chamber was covered by a layer of fresh, dry calcium chloride, and after washing out the chamber with a stream of dry air the current was cut off.

(3) *By saturated Vapour.* The stream of dry, clean air passing through the chamber was divided into two, one of which was bubbled through the lubricant and the other led through a by-pass. The two streams were mixed by passing through a glass bulb and led through the chamber. Lubricants with sufficiently high vapour-pressure are thus deposited as a film upon the surfaces.

Surfaces were lubricated with solids either by smearing the lubricant over the plates with a glass rod or by depositing a thin film from solution in a solvent. A film of insensible thickness was obtained by polishing off as much as possible of the lubricant with a fragment of chemically clean linen. For further particulars, the original papers should be consulted.

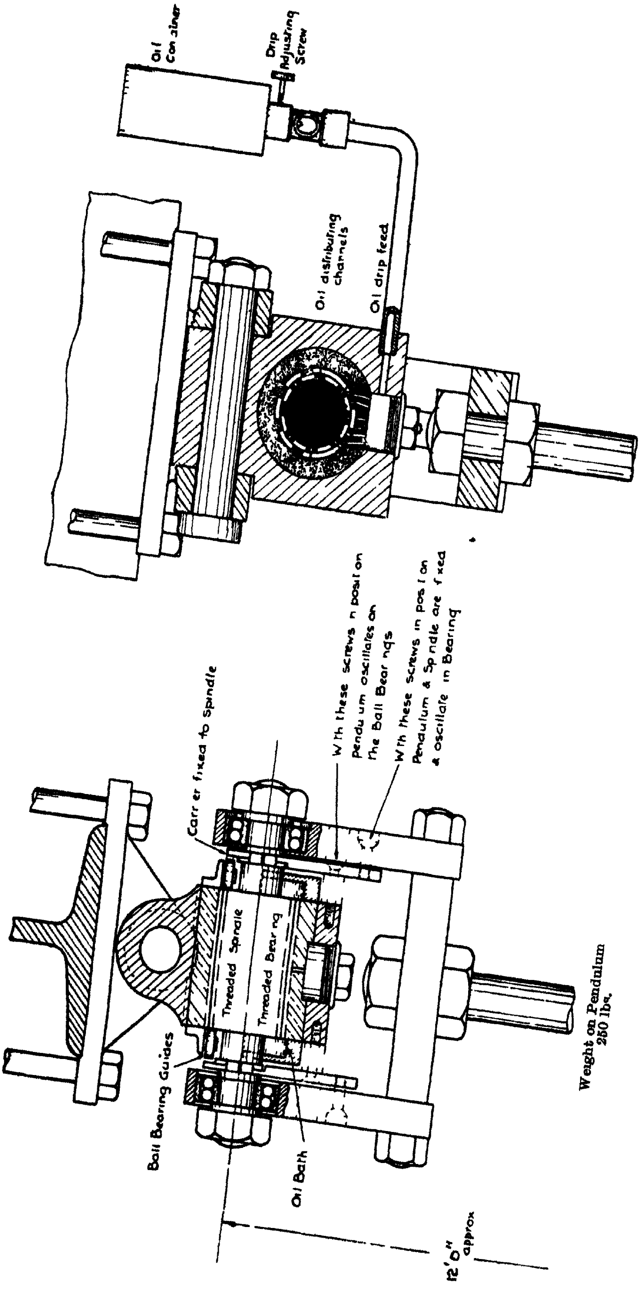
Oil Container
Drip Adjusting Screw
Oil distributing channels
Oil drip feed
With these screws in position Pendulum oscillates on the Ball Bearings
With these screws in position Pendulum & Spindle are fixed & oscillate in Bearing
Carrier fixed to Spindle
Threaded Spindle
Threaded Bearing
Ball Bearing Guides
Oil Bath
12'0" approx
Weight on Pendulum 250 lbs.

Fig 127

Stanton's Pendulum Machine.—This machine has been designed by Dr. T. E. Stanton for testing lubricants and bearing metals under conditions of boundary lubrication, such as normally obtains in worm gears and all machine details in which the relative motion is of a reciprocating character. The following description is taken from Dr. Stanton's paper on "The Nature of Lubrication in Engineering Practice," read before the International Air Congress, London, 1923.[1]

Description of the Apparatus.—The arrangement of the apparatus is shown in fig. 127. The experimental bearing, which is 3 inches long by 1·7 inches in diameter, is contained in a cast-iron housing suspended from a bracket bolted to the cross girder supporting the roof of the workshop, by means of a pin joint which will allow freedom of adjustment in a direction at right angles to the plane of the swing. By this means the pressure between the surfaces will be symmetrical on either side of the plane of oscillation.

The total arc of contact of the journal and bearing is restricted to an arc of 45 degrees on either side of the vertical, by cutting away the metal of the bearing in the region outside this arc as shown. In order to approximate to the condition obtaining in worm gears, that any two elements of surface in contact shall each be covered with fresh lubricant before the next contact, a series of special grooves was cut on the 90-degree arc of the bearing which supported the load. By allowing the lubricant free access to those grooves, a copious supply to the actual bearing surfaces was ensured. A precisely similar series of grooves intersecting these at right angles was cut on the surface of the journal. To obtain this condition, the spirals were made right-handed for the bearing and left-handed for the journal, and had a pitch of π times the diameter. By this means, the total area of contact of the surfaces was reduced to 0·25 square inch. In considering the attachment of the pendulum rod to the journal, it was thought advisable to provide means whereby the damping of the pendulum due to air friction alone could be studied, and for this purpose a locking device has been adopted, by means of which the rocking shaft can be fixed either to the pendulum rod or to the bearing. In the latter case, the pendulum can oscillate on ball-bearings fitted to the extension of the shaft on either side of the journal, as shown in fig. 127. These ball-bearings are housed on flitch plates on either side, and lugs fixed to the rocking shaft are provided so that they can be coupled to either the flitch plates or the bearing casting. The lubricant is supplied by a sight feed lubricator to a chamber in the base of the bearing casting, from which the oil is conveyed by the passages shown to the various spiral grooves cut in the bearing. In order to maintain a

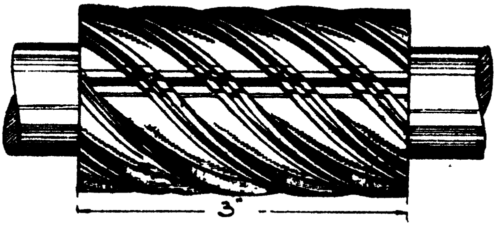

FIG. 127A.—Journal with Screw Thread.

An exactly similar thread, but of opposite hand, is cut in bearing, the bearing surface being small squares where the threads cross. Screw thread—5·33 inches pitch, square thread $\frac{3}{16}$ inch wide, $\frac{1}{10}$ inch deep, 8 starts. A second thread $\frac{1}{16}$ inch wide, $\frac{1}{10}$ inch deep was cut in the centre of the first thread.

---

[1] See also *The Engineer*, cxxxv. (1923), pp. 678–680.

copious supply of oil to the surfaces, end covers are also fitted to the bearing casting in the manner shown in fig. 127. By this means, oil-bath conditions are obtained over the 90-degree arc of contact of journal and bearing.

The Motion of the Pendulum. - From the above description it will be seen that the free oscillations of the pendulum about its mean position will be subjected to damping forces, due to the friction of the shaft in the bearing and the resistance of the air to the motion of the pendulum.

Under these conditions and provided that the amplitude of the oscillations is small, the motion of the pendulum is given by

$$I\ddot{\delta}+WL\delta+M_2+M_1=0, \quad . \quad . \quad . \quad . \qquad (1)$$

where M_1 is the moment of the friction about the axis, its sign depending upon the direction of the motion,

M_2 is the moment of the air resistance about the axis,
I is the moment of inertia of the pendulum about the axis,
L is the distance of the C.G. of the pendulum from the axis,
W is the weight of the pendulum.

The solution of this equation is complicated by lack of knowledge of the amount of air resistance of the pendulum and its law of variation with speed, but in the case of the present experiments it has been found comparatively easy to use pendulums of such a weight that the actual value of the moment of the air resistance of the pendulum is negligible compared with the value of the moment of the bearing friction. Under these conditions the motion of the pendulum is given by

$$I\ddot{\delta}+WL\delta+M_1=0 \quad . \quad . \quad . \quad . \qquad (2)$$

If we assume that the friction between the lubricated surfaces follows the laws of boundary lubrication investigated by W. B. Hardy, *i.e.* its value is independent of the relative speed of the surfaces, then, calling its value F, the solution of (2) is

$$\delta=\pm Fr/WL+A\cos\sqrt{(WL/I)}t.$$

where r is the radius of the bearing and A is a constant depending on the initial conditions. Assuming that the motion begins when the pendulum is inclined at an angle α to the left of the vertical, then

$$A=-\alpha+Fr/WL,$$

and the maximum amplitude of the motion to the right at the end of the first half-swing is

$$\alpha-2Fr/WL.$$

The successive amplitudes of the motion to the right will be

$$\alpha-6Fr/WL,$$
$$\alpha-10Fr/WL,$$
$$\alpha-14Fr/WL, \text{ etc.};$$

i.e. the damping of the oscillation will proceed at a uniform rate of $4Fr/WL$ radians per complete oscillation. Further, since the time of oscillation of the pendulum is independent of the amplitude of the swings and the friction, it follows that if the successive amplitudes of vibration of the pendulum be plotted on a time base, the criterion of the existence of boundary lubrication will be the possibility of drawing a straight line through the extremities of the successive ordinates representing the amplitudes.

Results of the Experiments.

SERIES I.

Hard Steel Journal (grooved). Phosphor Bronze Bearing (grooved).

(*a*) Lubricant—castor oil. Absolute viscosity at 20° C.=7·5.

The observed amplitudes of successive swings under loads of 500 and 250 lbs. (2000 and 1000 lbs. per square inch of surface of bearing) plotted on a time base are shown in figs. 128 and 129.

It will be seen that with the exception of the last two observations on the 500-lbs. pendulum, the whole of the plotted points lie on a straight line for each test, indicating that the friction is independent of the relative speed of the surfaces between amplitudes of swing of 8 degrees to 0·5 degrees.

Further, the slope of the lines for the two pressures of 2000 and 1000 lbs. per square inch are identical, showing that the friction is accurately proportional to the load. Inserting the values of *r* and L in the relation

$$4Fr/WL = \text{decay of oscillations per swing} = 0{\cdot}0023 \text{ radians},$$

we have $$F/W = \text{coefficient of friction} - 0{\cdot}092.$$

From the fact that in these experiments the frictional resistance of the bearing followed Amonton's Law in being proportional to the intensity of the load and independent of the relative speed of the surfaces over a considerable range of the motion, it would appear that the nature of the lubrication was that known as "boundary lubrication."

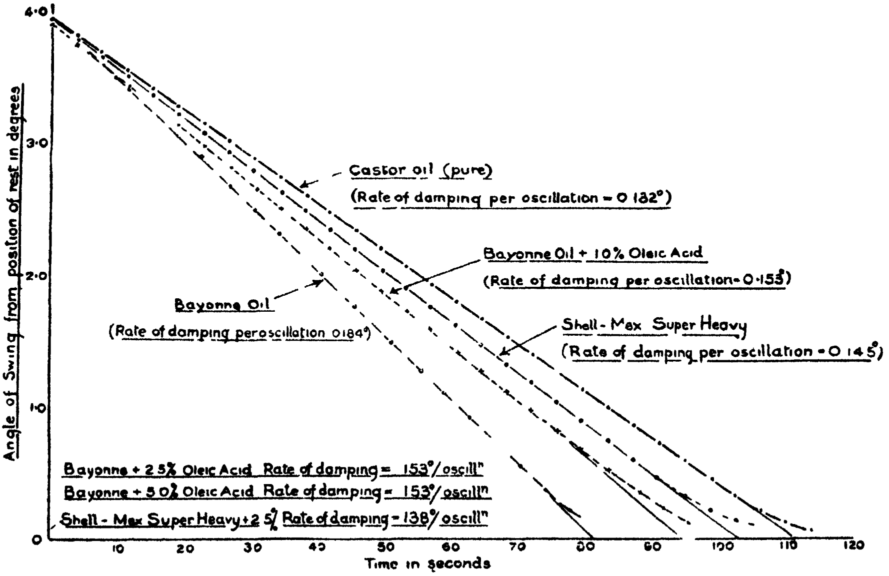

FIG. 128.—Lubrication Research—Pendulum-bearing Experiments.

Curves showing rate of damping of oscillations. Weight of pendulum – 500 lbs. (intensity of pressure – 2000 lbs /inch^2) Grooved phosphor-bronze bearing with grooved steel journal.

(*b*) Lubricant, a mineral oil of average quality known as Bayonne. Viscosity at 20° C.=1·6. Loading conditions and surfaces as in (*a*).

In changing from one oil to another, the journal and bearing were first well washed with petrol, then dried and washed again with methylated spirit. The surfaces were then dried in an air blast and covered with the new lubricant.

On testing the Bayonne oil, the results plotted in figs. 128 and 129 were obtained.

It will be seen that the type of lubrication is the same as before, but that the coefficient of friction is considerably higher and has a value of 0·128.

(*c*) The effect was then tried of adding small percentages of oleic acid to the Bayonne oil, in order to find out whether any reduction of friction took place corresponding to that obtained in the worm-gear tests previously carried out for the Lubricants and Lubrication Inquiry Committee. It was found that a 17 per cent. reduction in the coefficient of friction was obtained by the addition of as little as 1 per cent. of oleic acid to the Bayonne oil, and that increasing the amount up to 5 per cent. did not effect any improvement. The plotted results for Bayonne + 1 per cent. of oleic acid are shown in figs. 128 and 129.

(*d*) Finally, a cylinder oil known as Shell-Mex Super Heavy, viscosity at $20^\circ = 9{\cdot}7'$, was tried. Lubrication of the same characteristics as before was obtained with a coefficient of friction slightly greater than castor oil and equal to 0·10.

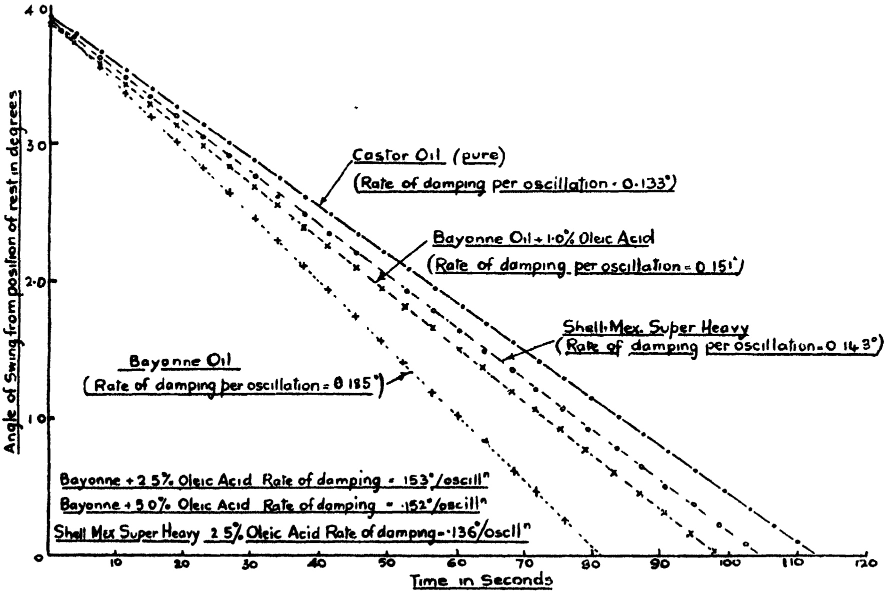

FIG. 129.—Lubrication Research—Pendulum bearing Experiments.

Curves showing rate of damping of oscillations. Weight of pendulum - 250 lbs. (intensity of pressure - 1000 lbs./inch^2). Grooved phosphor-bronze bearing with grooved steel journal.

SERIES II.

(Hard Steel or Phosphor Bronze as before, but with modifications in the grooving.)

A series of experiments was then undertaken to determine whether the elaborate system of grooving adopted in the first series of experiments was necessary to obtain the frictional resistances then obtained.

Using an ungrooved journal and an ungrooved bearing, with castor oil as the lubricant, it was found that steady conditions could be obtained, but that the coefficient of friction was 15 per cent. higher than with the grooved surfaces, and that substituting a grooved journal for the plain one did not improve matters. In the case of the Bayonne oil, the increase in friction due to using ungrooved surfaces was 22 per cent.

It is clear, therefore, that a system of grooving is essential in order to obtain the minimum friction due to the materials of the surfaces and lubricant employed. It was found by Beauchamp Tower that the presence of an oil groove in the crown of a bearing effectively prevented the formation of an oil film. It has now been demonstrated that in reciprocating motion a liberal amount of grooving to give the oil access to all parts of the bearing surface is necessary for efficient boundary lubrication.

Tower's Disc and Collar Machines.—Besides the machine for measuring the friction of journals described on pp. 447, 448, two other machines were designed

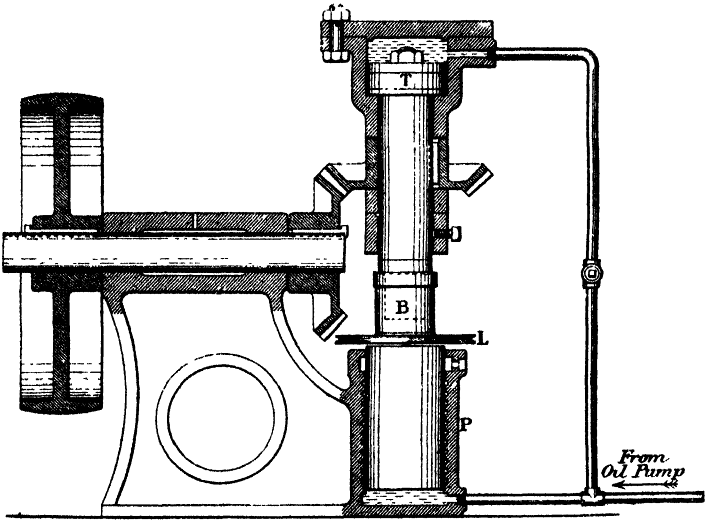

Fig. 130.

and experimented with by Beauchamp Tower. One was for measuring disc- and the other collar-friction.

The apparatus used for measuring the friction of lubricated discs is shown in figs. 130 and 223 (p. 543). The vertical shaft carrying the footstep gears into a horizontal shaft, the driving pulley on which can be changed to give the required speeds. A hard steel centre, secured to the bottom of the bearing B, rests upon a plunger fitting the cylinder P, whilst the vertical driving shaft is fitted at its upper end with a piston T of the same diameter as that of the cylinder P. By varying the pressure of the oil, which is supplied by a hand-pump with air vessel, the pressure upon the ram can be varied so as to give any desired load upon the contact surfaces. Two radial grooves in the bearing, shown on a larger scale in fig. 223 on page 543, pass from the centre of the bearing face to within a short distance of its circumference, and the motion causes the lubricant to flow out at its periphery into the annular space surrounding B, from which it passes through the spout, drops into the pipe, and again enters the bearing. A pulley L, actuating a spring, shows the frictional resistance of the surfaces.

The machine shown in fig. 131 was designed to measure the friction of a collar. The weight was applied by a delicately adjusted spring S, one end of which abutted against the front disc D, whilst the other end pressed against a nut N on a central bolt B connected with the disc C. The two discs rotating together, and pressing on the steel ring R, tended by friction to carry it with them, but were prevented from doing so by a horizontal lever attached to the ring, the friction between the ring and discs being measured by a spring-balance attached to the end of the lever. The methods of lubrication used, and the conditions under which the experiments with this machine were made, were not such as met with general approval, it being considered that the information gained by its use was not so complete as the machine was calculated to furnish.

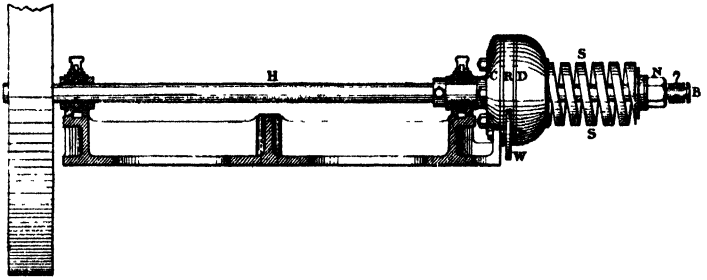

FIG. 131.

The Lanchester Worm-gear Testing Machine.—This machine was designed by Mr. F. W. Lanchester for the accurate measurement of efficiency of worm gearing.[1] The following description of the machine presented to the National Physical Laboratory by the Daimler Co. is taken from Appendix II. of the Report of the Lubricants and Lubrication Inquiry Committee (1920).[2] A sketch of the apparatus is given in fig. 132, and an enlarged view showing a section of the gear-box and the oil-circulating system in fig. 133.

Referring to fig. 132, the gear-box is supported in a cradle A in such manner that it has freedom of motion through a small angle about two axes at right angles. The worm is driven by the shaft B through the intermediate shaft C, the latter being provided with universal couplings at each end. In the same manner the worm-wheel shaft is connected to the bevel box E, through the shaft D and universal couplings FF. The load is supported by a bracket K, fixed to the arm G, the axis of this arm being parallel to and in the same vertical plane as the worm-shaft axis. The load is not fixed directly to the bracket, but is carried on a slider, and by a screw-and-nut device the distance of the load from the axis of the arm can be varied.

The bracket is permanently fixed to the arm, and thus the moment of the load about the worm-wheel axis is equal to the load multiplied by the length of the arm, and is always the same for the same load. The moment about the worm shaft, however, can be adjusted by means of the screw gear, the reading of the scale on the bracket giving the distance of the load from the axis. It will be seen, therefore, that if the efficiency of the gear is 100 per cent., and the gear ratio say 3 : 1, the speed of the worm being three times that of the wheel, the torque on the worm shaft will be one-third that on the worm-wheel

---

[1] See *Proc. Inst. Automobile Engineers*, 7 (1913), 242.

[2] Obtainable from H.M. Stationery Office, Imperial House, Kingsway, London, W.C. 2, price 2s. 6d. net.

shaft. The load being the same for each torque, the distance of the load from the worm axis will be one-third of its distance from the wheel axis. The efficiency of the gear being less than 100 per cent., the load needs to be moved further from the worm axis to balance the gear-box. The calculated distance of the load from the worm axis, assuming 100 per cent. efficiency, divided by the distance of the load to obtain a balance, is the efficiency of the gear.

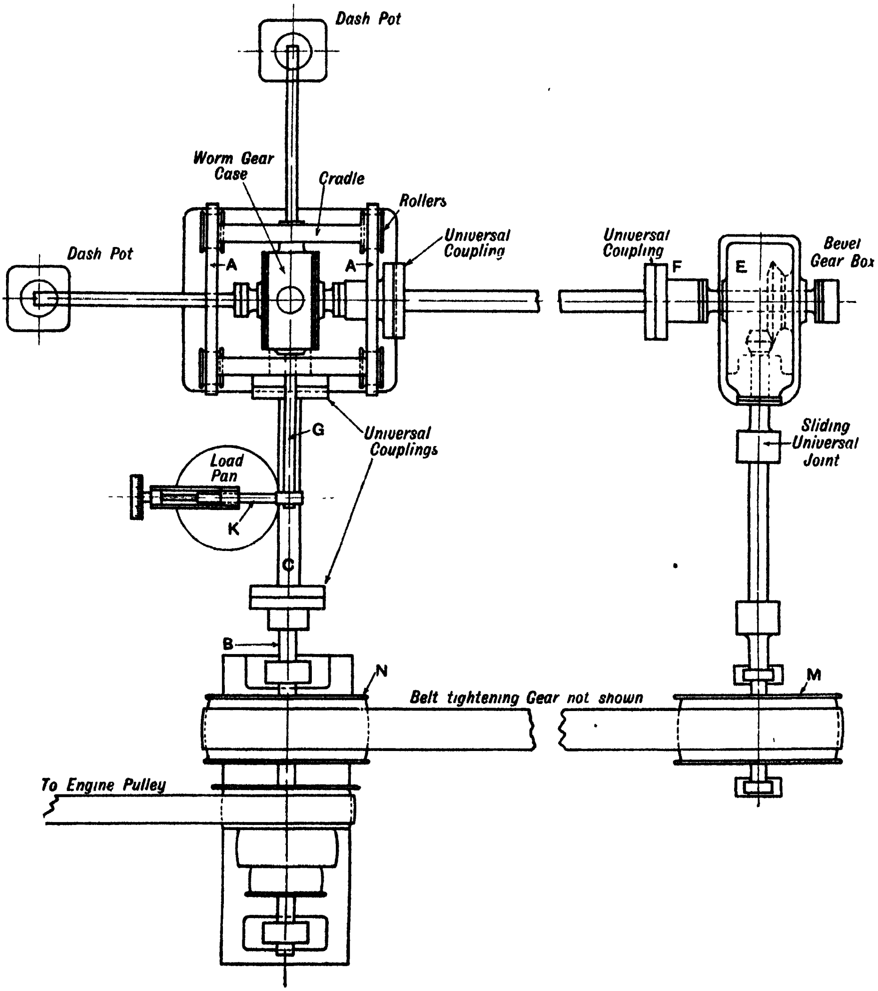

FIG. 132.

The drive is taken through the bevel box to the belt pulley M, the latter being of such diameter that it tends to drive the pulley N, on the driving shaft B, at about 3 to 5 per cent. higher speed.

It is arranged that the tension in the belt connecting the pulleys M and N can be adjusted over a wide range, an increase in tension causing an increase in the pressure between the teeth of the worm and wheel and, therefore, an increase in the torque.

By this means, the pressure between the teeth of the gears can be made to correspond with the transmission through the gear-box of as much as 100 horse-power, it being only necessary to supply the loss of power in the gears and the apparatus from an external source.

The apparatus was driven through the cone pulley P by a 15-h.p. petrol motor.

The speed was observed by means of a tachometer driven from the shaft B.

Observations of the temperature were taken at two places in the box, one at the top, in the path of the lubricant thrown off the wheel, and the other in the sump under the worm.

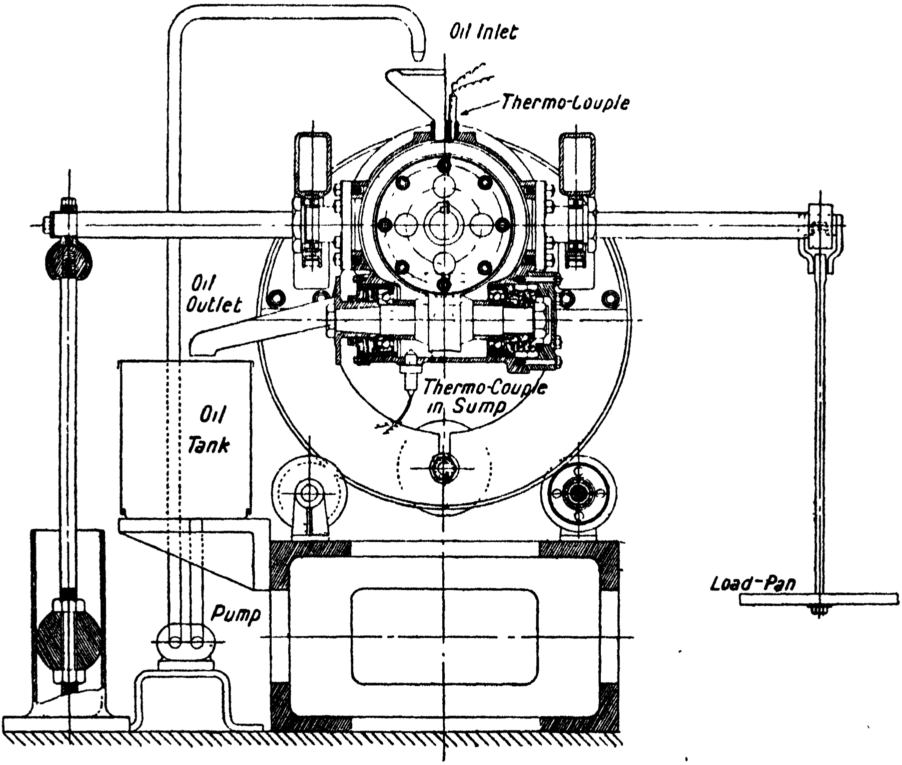

Fig. 133.

Thermocouples were used for the temperature measurements, these being more convenient to use and less liable to damage than glass thermometers.

Fig. 133 shows in detail the method of supporting the gear-box. It is held by means of ball-bearings in a cradle, consisting of two circular plates connected together by bridges. The cradle can itself rotate through a small angle by rolling on the four ball-bearing rollers.

The gear-box is capable of movement, therefore, about the axis parallel to the worm shaft and passing through the worm-wheel axis, and also about the axis parallel to the wheel shaft and passing through the worm axis.

The lubricant contained in the tank shown in fig. 133 is fed into the top of the gear-box by means of a rotary pump. The lubricant leaves the box by means of the large bore pipe K, the hole in the side of the box being about on a level with the top of the worm. A heater, not shown, is provided under the tank, so that the temperature of the lubricant can be raised to any desired value.

The apparatus was carefully set up and an optical method was used to determine the position of the bevel box in relation to the worm and wheel.

Rigid pointers were provided to indicate when the box was level in both directions.

The method of experiment was as follows:—

The apparatus was run up to the desired speed and the tension of the belt adjusted until the load was lifted. The slider supporting the load was moved either towards or away from the supporting arm until balance was obtained about both axes. The load was slightly released and applied again, care being taken to approach the balance always in the same direction. The adjustment of the position of the load was varied slightly in either direction until the best position was obtained and this was noted, together with the temperature and speed then recorded.

The balance was retained, by altering the tension in the belt as required, until a higher temperature of the oil was reached, when readings were again taken. This was continued until the rise in temperature was very slow, when heat was applied to the oil tank and the experiment continued.

With higher load it was not necessary to apply heat to the lubricant in the tank, the temperature rising of its own accord to the value desired, in a reasonable time.

It is estimated that the absolute accuracy of the efficiency obtained is between 0·2 and 0·3 per cent. The agreement between the readings taken, however, in the manner described, is probably within ±0·1 per cent. A difference corresponding to 0·1 per cent. could easily be seen when the apparatus was running smoothly.

Kingsbury's Oil-testing Machine.

Prof A. Kingsbury has described [1] a machine and methods of testing oils designed with special reference to the conditions under which the effects due to oiliness or "body," on the one hand, and viscosity on the other hand, may be investigated independently. The apparatus used is also serviceable for tests under any intermediate condition. The following description is taken, by permission, from Kingsbury's paper:—

Fig. 134 shows the general appearance of the testing machine, for the frame and driving parts of which a 14-inch drilling-machine was utilised. The test journal has its axis vertical; it is suspended from the spindle by means of a flexible coupling and runs between two opposed bearings in a cylindrical cup or case, which may be filled with the oil to be tested if a "bath" is desired. The load on the bearings is provided by means of a helical spring of 900 pounds capacity, with screw adjustment and a device for quick application or removal of the load without disturbing the adjustment. This spring is enclosed in a horizontal tube attached to the side of the oil case. The cup has a cover with a small hole for the insertion of a thermometer.

The cup and attached parts are borne on a hollow vertical spindle, 1⅜ inches in diameter, turning freely in a sleeve supported from the frame of the machine;

---

[1] *Trans. Amer. Soc. Mech. Eng.*, xxiv. (1903), p. 143.

the spindle extends about two feet below the sleeve, and is suspended from a fixed bracket by a tempered-steel wire passing through the spindle to its lower end. In testing, these suspended parts turn freely to a position where the torsion of the suspension wire balances the friction at the test journal, and the angle of torsion, which may be as great as 270°, is read from a graduated disc.

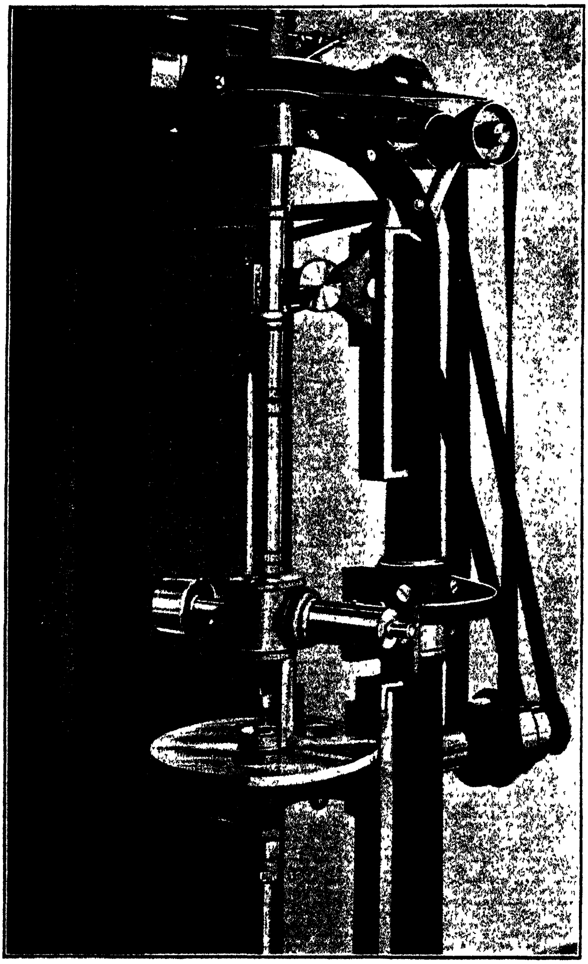

FIG. 134.

The suspended parts being counterbalanced, there is no appreciable pressure of the spindle against its sleeve; and when the oil in this bearing becomes evenly distributed, there is no error from friction, as has been amply proven by tests with an "optical lever," as well as by the uniformity of the results in use. At the same time, the viscosity of the oil serves the purpose of damping the oscillations which arise from variations in speed or friction at the test journal. This mode of suspension gives large indications for very small frictions at the test journal, while a helical spring placed on the extension of the spindle is added for tests involving great friction.

The cup and test journal contained in it may be heated as desired by a Bunsen flame. The revolutions of the journal are indicated by a counting device, not shown in the figure.

For tests involving perfect lubrication (friction due to viscosity only), the test journal used is 1⅝ inches diameter, of tool steel, hardened, ground, and polished. The brasses are sectors cut from a ring finished in the lathe, each having an arc of about 120° and a length of 2 inches. These brasses are fitted with some care, so that when perfectly clean they may be made to adhere to the journal after the manner of well-fitted "surface plates." In making tests, care is taken to prevent wear of these parts, which are used only under such loads that the oil film effects complete separation of the surfaces and entirely prevents wear; the load is always relieved before starting or stopping the journal; and, finally, a friction device in the driving coupling safeguards the journal from motion against excessive friction. These precautions against wear are necessary to ensure the constancy of results.

For tests for comparing oils with respect to "body" or oiliness, the best results have been obtained by the use of a hardened and polished steel journal ¼ inch in diameter, running between two brass bearings about 1 inch long; on this small journal pressures up to 8000 lbs. per square inch may be applied, if necessary. The samples of oil to be compared are contained in small brass cups placed inside the case and surrounding the test journal, each cup having a wire for transferring oil to the journal; the case, samples, and journal are heated together to any desired temperature.

In testing for "body" the oils are compared in pairs, being applied alternately at the upper end of the bearing, one being applied until the friction becomes constant or nearly so; the other is then applied until it displaces the first and the friction again becomes constant at the new value; this process is repeated several times. The oil giving the less friction is assumed to have the greater body. In this way, the order of the body values of six samples of oils of the same class may generally be determined for any given temperature in an hour or less; the friction indications rapidly follow the changes of the oils and are generally quite consistent. When the oils to be compared are of different classes (as mineral oils with fatty oils), the first friction indications on changing oils are frequently misleading, and a longer time is required to ensure certainty of results.

The speeds for the "body" tests are made rather low, and pressures not unnecessarily high, in order to avoid heating and wear of the journal, since it is essential for comparative purposes that the surfaces should be in the same condition for both samples compared—a requisite which, above all others, led to the development of this method of testing. Again, the actual temperature of the oil at the test surfaces is shown more nearly by the thermometer if but little heating by friction be permitted. The order of "body" values, as determined by this method, has been found not to vary with the speed or the pressure within a considerable range. A speed of 50 to 100 revolutions (3 to 6 feet) per minute, with sufficient pressure to make the coefficient of friction only as great as 0·01 to 0·03, have been found most satisfactory; the pressures being from 500 to 5000 lbs. per square inch, according to the character of the oils.

In the tests made with this machine under conditions of "perfect" lubrication, it was found that the surfaces were so perfectly separated by the oil-film that the coefficients of friction were extremely small, the minimum coefficient for all oils being found to be, approximately, 0·0006. The results obtained by different experimenters agreed remarkably well, and were found to approximately verify Reynolds's deduction from Beauchamp Tower's experiments, that the friction under conditions of perfect lubrication is proportional to the viscosity of the oil and varies, approximately, as the square root of the speed.

The "body" or oiliness tests made with this machine are the most useful from a practical point of view, and they support the established fact that the mineral oils as a class have much less "body" than the animal and vegetable oils of similar or nearly the same viscosity. When, however, the difference in viscosity was great—as, for instance, between mineral cylinder oil and lard oil —the mineral oil was found to possess the greater "body." As showing the relation between viscosity and "body," it is interesting to note that four cylinder oils were found to possess "body" in the same order as viscosity. Samples of castor, lard, olive, and sperm oils also ranged themselves by the "body" test in the same order as that of their viscosities.

Thurston's Testing Machine.

This machine, which is made by Messrs. W. H. Bailey & Co of Manchester, is frequently used in England and America. It is convenient, and easily kept in order; for scientific work, however, it is hardly suitable. Two sizes are made: one, a small machine, occupying but little space and requiring very little power to drive it, and another, of much larger form, suitable for railway work.

Of these, the larger machine only will be described. It has a cylindrical journal against which work two brasses, one above and the other below. Slung from the upper brass is a hollow pendulum containing a strong spring, the upper end of which lifts the bottom brass against the journal, whilst the lower end depresses the pendulum and helps to weight the upper brass

Fig. 135 is a side elevation, with brasses and pendulum in section, and fig 137 is a photo-print of this machine as used by the authors.[1] Fig. 136 is a front view of part of the machine drawn to a larger scale. The hollow shaft A, driven by a cone pulley B, is mounted on a strong cast-iron stand, the forked ends of which form the bearings upon which it runs. One end of the shaft projects beyond the bearing and is fitted with a bush C, on the outside surface of which the oil tests are made. This enables various metals to be used as bearing surfaces, for the bush can be removed and another put in its place. The box E E, forming the head of the pendulum, holds the two bearing brasses D D, on which the pendulum is slung from the journal. In order to enable the operator to vary the pressure of the brasses against the journal at will, the pendulum is constructed as follows: A brass tube H (figs. 135 and 136) is screwed into the axle-box E, which passes round the journal and holds the bearings D in position. In the upper part of this tube is loosely fitted a distance piece O, which, by the action of a strong spring below it, forces the under brass against the journal. The end of the spring does not press directly against the distance piece, but upon a screwed washer K, threaded upon a rod M, which has a square end, by means of which it can be rotated. At its lower end the spring rests upon a cap I, screwed to the tube H, by which the stress on the spring is brought to bear upon the upper bearing D, as well as on the lower one. To compress the spring and increase the load on the bearings, the square end of the rod M is rotated, which lowers the washer K, to which is fixed the index finger Y. A graduated scale Z, screwed to the tube H, shows the weight per square inch and the total weight on the brasses for every position of K. A ready means of taking the pressure off the brasses is furnished by the nut P,

---

[1] Those desirous of obtaining a machine similar in all respects to the one described should specify their requirements to the makers, as the machine usually supplied does not include many important modifications described in the text.

which can be screwed down until the key R, against which it presses, separates the distance piece O from the bearing.

It is evident that any friction between the brasses D D and the journal C will cause the pendulum to move in the direction of revolution of the shaft, and the greater the friction the further will the pendulum swing, the angular movement being indicated by the pointer V moving over the arc W (see fig. 136). As the moment of resistance of the pendulum varies with its weight and the position of its centre of gravity, it is possible to vary very considerably the scale of total frictional resistances marked on the arc W. When an open scale is required, the castings I and J are suitably reduced in weight, as shown in the figure; a counterbalance can also be placed on a pillar screwed into the top of the axle-box E. Of course, each alteration of the position of the centre of

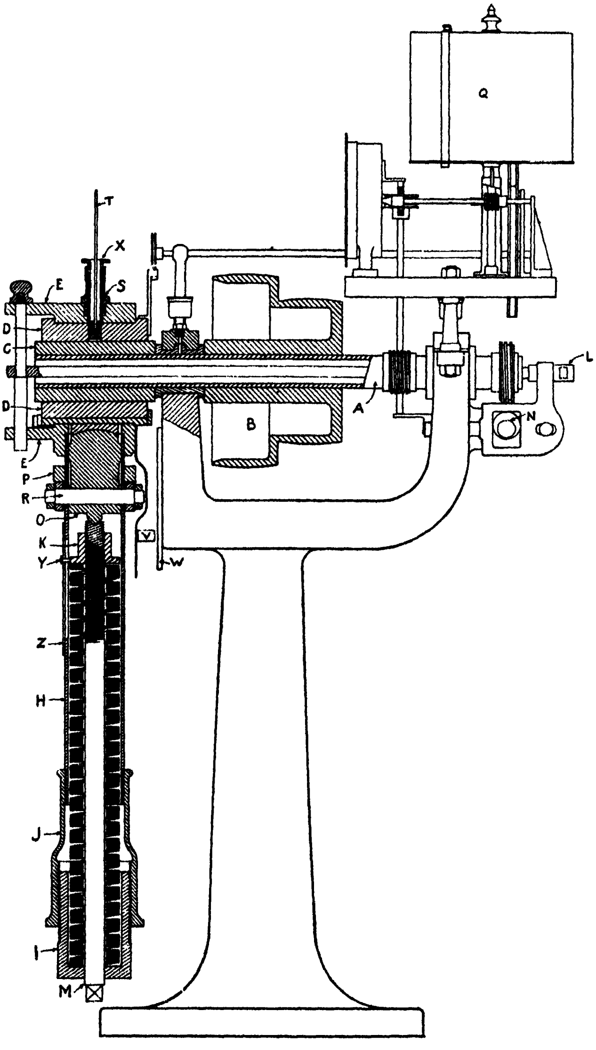

FIG. 135.

gravity of the pendulum necessitates a corresponding change in the graduation of the scales W and Z, and for this reason it seems preferable to graduate the arc in degrees instead of in total frictional resistances (see p. 439).

The lubricant can be supplied to the journal by means of pads, fixed in the sides of the axle-box, the method of supplying the oil to the pads being varied according to the conditions of lubrication under which it is desired to experiment. Another method, used by the authors, is shown in fig. 136. *aa* are glass tubes passing through corks fixed in holes in the sides of the axle-box. Each tube is drawn down to a fine orifice, through which a double strand of

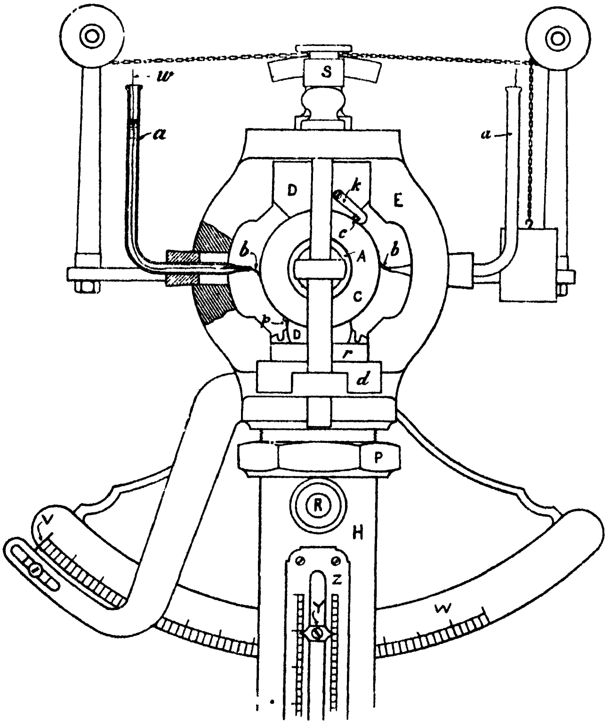

FIG. 136.

cotton wick *b* is passed, held by means of a looped platinum wire *w*. The tube is filled with the oil to be tested, which is conveyed through the wick on to the journal. By varying the size of the orifice, the rate of feed of the oil can be altered at will. The oil fed in this way on to the journal does not spread itself evenly along the upper brass, but tends to collect at the middle ; and at high speeds, if the feed of oil be rapid, it tends to collect in drops, and to fall away from the journal without wetting it. It was found that this could be prevented by placing a knitting-needle *c* in the angle between the brass and the journal. The knitting-needle, which is held in position by the tension of the oil-film, rotates rapidly, and spreads the oil from end to end of the brass. Two small hooks *k* (the front one only shown), fixed to the ends of the brass, prevent the needle from falling away when the machine stops, or if the tension of the oil-film should become momentarily weakened. To spread the oil along the lower brass, a narrow strip of sheet brass *p* is soldered near one edge, so as to form with the journal a channel which collects the oil. This lower brass, in the machine used by the authors, is crescent shape in section, and is supported in a well-lubricated steel cradle *r*, which allows a little sideplay in the axle-box, and enables the friction surfaces to place themselves in that position which gives the greatest carrying power. Suitable grooves cut in the steel cradle collect the surplus oil which falls from the journal and brasses, and conduct it into the trough *d* (fig. 136).

To assist in distributing the lubricant evenly over the journal, and to prevent both it and the brasses from wearing in ridges, the latest form of Thurston's machine is fitted with an eccentric N (fig. 135), actuating the rod L, which slowly moves the brasses backwards and forwards along the journal. With this device attached, the readings obtained by making a series of tests of the same lubricant show fewer and smaller discrepancies than can be obtained when the brass has no lateral play.

In the machine as usually supplied, a thermometer, the bulb of which is let into the metal of the upper bearing, measures the temperature to which the latter is raised by the friction. In the machine used by the authors, the hollow brass pillar S (fig. 135) is screwed into the top of the axle-box, and through this a thin steel tube X, closed at the lower end, is passed into a conical hole in the upper brass into which the end of the steel tube fits closely. In this tube an ordinary glass chemical thermometer T is placed, the bulb of which is immersed in mercury which fills the lower end of the steel tube. When it is desired to remove the pendulum from the testing journal, the steel tube X is taken out, and a brass cap with a ring at the top is screwed on to the brass pillar S. By means of an attachment from a small overhead travelling crane, the pendulum may thus be easily moved off and on the journal.

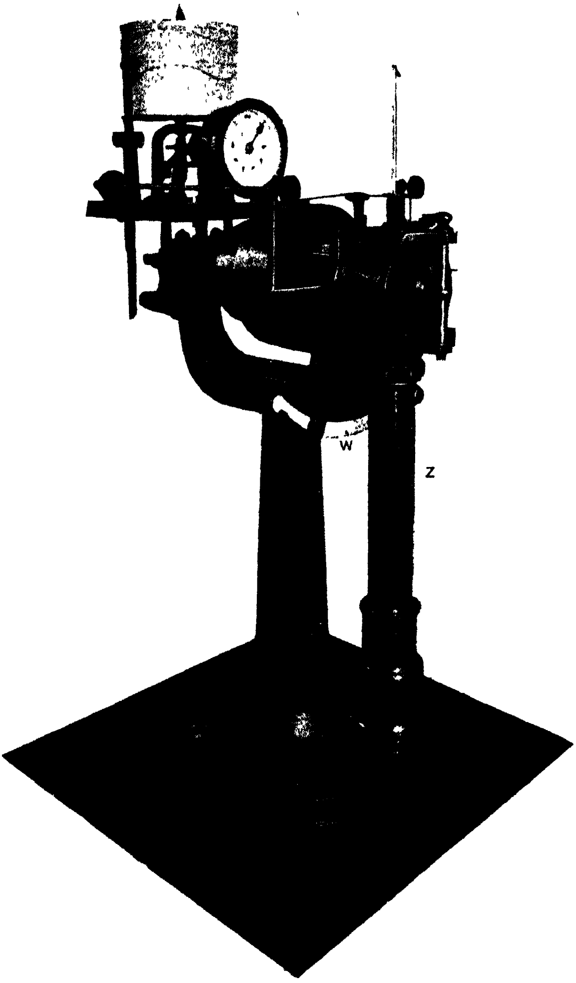

Fig. 137.

To the pendulum and stand is sometimes attached a cord or chain, of such length that the pendulum cannot swing beyond the desired limit.

The machine should be driven at a very regular speed, preferably by an electric motor, and such gearing should be used as will enable it to be run at a variety of speeds; for, with good lubrication, we may, roughly, consider that at high speeds and moderate loads it is the viscosity which controls the frictional effects, whilst with low speeds and heavy loads the efficiency of the lubricant depends upon its oiliness or greasiness, as well as upon its viscosity.

To the latest form of this machine there is attached an automatic recording apparatus, which registers on a sheet of ruled paper the number of revolutions made by the journal and also the frictional resistance at each moment. The paper upon which the record is drawn is placed upon a drum Q (fig. 135), revolving once for every 100,000 revolutions of the journal. Against the paper rests a pen, actuated by the pendulum as it swings from the vertical. In the machine used by the authors, a second speed gear has been added for slow speed tests, capable of revolving the drum once for every 120 revolutions of the journal, so that the diagram paper is moved a quarter inch for one revolution of the journal. A counter is fixed on the machine in a convenient position, to indicate the number of revolutions made by the journal.

The greater portion of the load placed upon the test bearings results from the compression of the central spring, and is equally distributed between the upper and lower brasses. In addition, however, to the pressure resulting from the stress of the spring, the upper brass C, when the swing of the pendulum is small, has to carry the weight of the pendulum as well. When this is light, and the pressure on the spring considerable, no serious error results from taking the load on the bearings as being distributed evenly between the two brasses. Although, by grasping the journal between two brasses and putting on the load by compressing a spring, some errors are introduced, the arrangement has the advantage of reducing the pressure on the supports of the journal, and all risk of overheating the fixed bearings is avoided.

Several methods of calculating the area of contact of a brass have been adopted. The plan commonly followed has been to multiply the length of the brass (b) by the diameter of the journal ($2r_0$); $2r_0b$ is then the projected area of the bearing on a diametral plane, or, as it is commonly called, the nominal area. But it is impossible, except with light loads, to make a bearing run satisfactorily when the brass embraces as much as one-half of the journal. In practice, the sides have to be cut away until the actual arc of contact is only one-fourth or one-fifth of the circumference; and as at all ordinary speeds, with good lubrication, the friction is nearly proportional to the actual contact area, it is better to substitute actual for nominal areas by multiplying the length of the arc of contact a by that of the brass b.

Thurston graduates the scales on his machine on a nominal area basis; however, from the following formulæ the scales can be graduated to agree with actual areas of contact, and from them the true coefficient of friction, etc., can be obtained.

Let r=radius from centre of journal to centre of gravity of pendulum.
r_0=radius of journal.
W=weight of pendulum.
a=width of brass (*i.e.* length of arc of contact).
b=length of brass.
P=total pressure of brasses on journal.
p=pressure per square inch.
T=load on spring.
θ=angle between pendulum and perpendicular through axis.
μ=coefficient of friction.
F=total frictional resistance.

When θ is 90°, $$Wr = Fr_0 \quad (1)$$

When it is any other angle, $$Wr \sin\theta = Fr_0 \quad (2)$$

Therefore, $$F = \frac{Wr \sin\theta}{r_0} \quad (3)$$

From equation (3) the graduations on the arc W are usually marked off so as to give the total frictional resistance F for any angle, but as, when the spring is compressed, the centre of gravity of the pendulum moves downwards and the length of r therefore increases, these graduations can only be strictly correct for one position of the spring.

When the pendulum is a heavy one, and the compression on the spring is such that the load on the brass is small, the load on the upper brass is, at all small inclinations, $$P_1 = T + W \quad (4)$$ and on the lower brass, $$P_2 = T \quad (5)$$

When T is large and W is small, it is sufficiently accurate to make

$$P = 2T + W \quad (6)$$

and from this the left-hand side of the scale N is graduated.

Under similar circumstances, the pressure per square inch is

$$p = \frac{P}{2ab} = \frac{2T + W}{2ab} \quad (7)$$

From this equation the graduations on the right-hand side of the index plate are deduced.

The readings given by the index plate N and the arc W enable the coefficient of friction to be calculated directly, for

$$\mu = \frac{F}{P} = \frac{\text{Reading given by arc W}}{\text{Reading given by index N}} \quad (8)$$

When experimenting with small loads on this machine, it must be borne in mind that the load on the upper brass is always greater than on the lower one. Under such circumstances, the maximum load is given by equation (4) and the pressure per square inch is

$$p = \frac{P_1}{ab} = \frac{T + W}{ab} \quad (9)$$

It is impossible always to measure accurately the friction due to the upper and lower brasses respectively. When the lubrication is good, and the speed of rubbing over 3 feet per minute, the friction is proportional to the area of the brass in contact with the journal and independent of the load, but when the speed is small this is not the case, and it is impossible to obtain *accurately* the coefficient of friction of either the upper or lower brass.

As stated on p. 437, the graduations on the arc W, when marked so as to give the total frictional resistance F, are subject to a small error, due to the fact that the length of r is increased by compressing the spring. Also, any alteration of the weight of the castings J and I would render these graduations useless. The authors therefore prefer to graduate the arc in degrees, and the index N in lbs. of spring pressure, and to construct a table from which the coefficient of friction can be read off corresponding to any angle of pressure. As an example, the following particulars of the machine used by the authors are given, but of course they will not apply to any other machine, unless of exactly the same dimensions, weight, etc.

TABLE CXXXVIII.

Value of W . . 159·5 lbs.

" r_0 . . 1·875 inches.

" r . . { At 0 lbs. pressure of spring = 14·64 inches.
{ At x (1000) lbs. pressure of spring = 14·64 + x(0·026) inches.

" ab . . { Upper brass = 13·30 sq. inches.
{ Lower brass = 13·13 " "

" T . . At 1000 lbs. on index N, the load due to pressure of spring = 500 lbs. on each brass. Therefore,

Scale Reading (lbs.)	Total Pressure (P) of Brasses on Journal	Pressure per sq. inch (p).	
		On Upper Brass	On Lower Brass.
1,000	1159·5	49·6	38·1
2,000	2159·5	87·2	76·2
3,000	3159·5	121·8	114·2
4,000	4159·5	162·4	152·3
5,000	5159·5	200·0	190·4
6,000	6159·5	237·6	228·5
7,000	7159·5	275·2	266·6
8,000	8159·5	312·7	304·6
9,000	9159·5	350·3	342·7
10,000	10159·5	387·9	380·8

$$F=\frac{Wr\sin\theta}{r_0}=\frac{159\cdot5r\sin\theta}{1\cdot875}=85\cdot07r\sin\theta.$$ Hence,

Scale Reading (lbs.)	Value of F	Value of $\mu=\frac{F}{2T+W}$
1,000	1247·64 sin θ	1·076 sin θ
2,000	1249·85 "	0·579 "
3,000	1252·06 "	0·396 "
4,000	1254·27 "	0·301 "
5,000	1256·48 "	0·243 "
6,000	1258·69 "	0·204 "
7,000	1260·91 "	0·176 "
8,000	1263·12 "	0·155 "
9,000	1265·33 "	0·138 "
10,000	1267·54 "	0·125 "

From the above, Table CXXXIX. has been constructed.

Before using a new machine, it is desirable to test the spring and verify the graduations on the arc W and the scale N, if correct results are desired. The pointer which indicates on the arc W the deflection of the pendulum should be a knife edge, and should be attached to the axle-box and not to the brass tube, since the latter rotates slightly when the nut P is turned. It is also necessary that this pointer should be capable of adjustment, in order that it may be made to point accurately to zero when the pendulum comes to rest after swinging freely, which free swinging of the pendulum is brought about in the following manner. The journal is well lubricated with the oil to be tested, and is run for a few seconds at the speed of about 100 revolutions per minute, the pendulum being allowed to hang by its own weight, and all pressure on the journal due to the spring being removed. An oil-film between the upper brass and the journal having been thus established, the machine is stopped: the pendulum, being now supported on the oil-film, will swing freely for several seconds before the oil is squeezed out, and, if correctly adjusted, the pointer will make approximately equal and gradually diminishing excursions on either side of the zero before coming to rest on the zero point.

Method of Working. As already stated, in the machine used by the authors the arc W is graduated in degrees, and the scale N in pounds of spring pressure. Plain paper is used on the recording drum, and, before making each test, a base line is drawn upon the paper by rotating the drum against the pen with the machine at rest and the pointer at zero. At the end of the test, the area enclosed between the curve and this base line is measured by means of a planimeter if the curve is irregular, and thus the average deflection of the pendulum is easily determined and the friction coefficient read off from the table. The following simple rules are followed in making each test:—

TABLE CXXXIX.

Deflection of Pendulum (degrees).	Total Pressure on Scale N. (Thousands of Pounds)									
	1	2	3	4	5	6	7	8	9	10
	Coefficients of Friction									
0·1	·0019	·0010	·0007	·0005	·0004	0004	·0003	·0003	·0002	·0002
0·2	·0038	·0020	·0014	·0010	·0008	·0007	·0006	·0005	·0005	0004
0·3	·0056	·0030	·0021	·0016	·0013	·0011	·0009	·0008	·0007	·0007
0·4	·0075	·0040	·0028	·0021	·0017	·0014	·0012	·0011	·0010	·0009
0·5	·0094	·0050	·0034	0026	·0021	0018	·0015	·0014	·0012	·0011
0·6	·0113	·0061	·0041	·0031	·0025	·0022	·0019	·0016	·0014	·0013
0·7	·0132	·0071	·0048	·0036	·0029	·0025	·0022	·0019	·0017	·0015
0·8	·0150	·0081	·0055	·0042	·0034	0029	·0025	·0022	·0019	·0017
0·9	·0169	·0091	·0062	·0047	·0038	·0032	·0028	·0024	·0022	·0020
1·0	·0188	·0101	·0069	·0052	·0042	·0036	·0031	·0027	·0024	·0022
2·0	·0376	·0202	·0138	·0105	·0084	·0072	·0061	·0054	·0048	·0044
3·0	·0563	·0303	·0207	·0157	·0126	·0107	·0092	·0081	·0072	·0065
4·0	·0751	·0404	·0276	·0210	·0169	·0143	·0123	·0108	·0096	·0087
5·0	·0938	·0505	·0345	·0262	·0212	·0178	·0153	·0135	·0120	·0109
6·0	·1125	·0605	·0414	·0314	·0254	·0213	·0184	·0162	·0144	·0131
7 0	·1311	·0705	·0482	·0366	·0296	·0248	·0214	·0189	·0168	·0152
8·0	·1498	·0805	·0551	·0419	·0337	·0284	·0245	·0216	·0192	·0174
9·0	·1683	·0905	·0619	·0471	·0379	·0319	·0276	·0243	·0216	·0196
10 0	·1868	·1005	·0688	·0523	·0421	·0354	·0306	·0269	·0240	·0217

1. See that the pointer is accurately adjusted to zero on the arc when the pendulum is hanging freely.
2. With the machine at rest, and the pointer at zero on the arc, lower the pen on to the paper, and draw a base line by rotating the drum. Then raise the pen off the paper.
3. Screw up the spring with the brass nut P slack, until the desired pressure is attained, then screw the nut down until the pressure is taken off the journal. Start the machine, and adjust the lubricators so as to give the required oil-feed. Then slack the nut sufficiently to bring the pressure of the spring on to the journal, and run the machine at a fair speed until the brasses are well oiled and are nearly at the extreme front end of the journal. Then adjust the speed to that required for the test, and, as soon as the brasses reach the extreme front end of the journal,[1] drop the pen and commence the test.

---

[1] The friction is sometimes different at the front and back ends of the journal. Therefore it is desirable, especially when making slow-speed tests, to commence always at the same point.

4. *Starting.* Before starting the machine, see that the pressure of the spring is off the journal, and that the pen is raised off the paper.
5. *Stopping.*—Before stopping the machine, raise the pen off the paper. Before releasing the pressure of the spring, also raise the pen off the paper.
6. *Removing Pendulum from Journal.* Before removing the pendulum from or replacing it upon the journal, take care to release the pressure of the spring, either by screwing down the nut P or by unscrewing the rod M.

Before testing a fresh sample of oil, the pendulum must be removed from the journal, and the brasses and journal must be wiped thoroughly clean, using first of all a sponge cloth and afterwards a soft duster, and taking care to leave no lint upon the surfaces. The lubricators, *aa*, fig. 136, are cleansed by rinsing with ether or benzine, then warmed, and aspirated with air until every trace of the solvent has been expelled. They are then filled with the oil to be tested, a few drops of the oil are also placed upon the journal and brasses and spread over the surfaces with the clean finger, and the pendulum is replaced upon the journal. Then the machine is run for a few minutes with a free oil-feed to flush away the remaining traces of the oil last tested, and the test of the new oil is commenced.

Great care must be taken not to allow the brasses and journal to run dry and seize locally. Should this happen during any test, the friction of the surfaces will be so much increased in succeeding tests, even with the same oil, that the results will not be comparable with the previous tests. In fact, the effect upon the frictional resistance of the surfaces caused by very small changes in their shape or condition is so great, especially at slow speeds and at high pressures, and with bath and pad lubrication, that each sample of oil tested in the machine must be compared with results obtained by testing some standard oil immediately before, and, preferably, again immediately after, the sample has been tested. If the two tests obtained with the standard oil do not agree, one cannot be certain that differences observed between the sample and the standard may not be due to the frictional resistance of the surfaces having altered during or between the tests.

When commencing to use a new machine or new brasses, the proper bedding of the brasses to the journal is very important, and with new brasses is very tedious. As the most rapid wear takes place at low speeds and under high pressures, we have found it best, when bedding new brasses, to run the machine under these conditions with a mineral lubricating oil of moderately low viscosity (*e.g.* 900/7 oil), removing each brass at intervals of about two hours and very carefully scraping the high places, finally rubbing them down with the finest emery paper until the brass is seen to be bearing all over. Another important point is to have a very hard surface on the testing journal. If the journal be made of soft steel, particles of brass torn off the bearings are apt to become embedded in the steel; these gradually gather more brass as the journal revolves, and eventually sufficient is collected to cause local seizing to take place, and the surface of the brass becomes ruined.

To secure low frictional resistances, and to obtain results almost wholly dependent upon the viscous properties of the lubricant, the brasses should each cover about one-fourth of the circumference of the journal; no oilways should be cut in their surfaces, but the lubricant should be supplied by means of pads or other lubricators placed at the sides of the journal. The speed of rubbing should not be less than 100 feet per minute. When these conditions obtain and the load is not too great, it has been demonstrated that the friction is practically proportional to the viscosity of the oil, and is entirely independent of the nature of the contact surfaces or the oiliness of the lubricant. It is only with fairly viscous oils, light loads, and good lubrication that the oil pressure-film forms properly at speeds lower than 100 feet per minute. It will, of course, be understood that different oils will heat differently, and that the viscosity of the *heated* oil film must be taken for comparison with the frictional effect, for the test to be a fair one. On this account, when trials are made in such a manner that the friction results entirely from the viscosity of the liquid, the oil which at ordinary temperatures is most viscous does not always give the greatest friction, for the lubricating film is heated several degrees above the temperature of the surrounding metals by the work done, and its viscosity is thereby reduced. Mineral oils tested against animal or vegetable oils of the same viscosity will thus sometimes give the lower friction, for the former lubricants, when heated, lose their viscosity more rapidly than do the latter (see figs. 82, 83, 84, and 85 on pp. 229, 234, and 235). Tests of this kind by no means show which is the best lubricant, and need seldom be made, for the actual viscosity of an oil and the effect produced by increased temperature can be more satisfactorily ascertained with the viscometer.

The legitimate practical result obtained by mechanical oil-testing machines is, as has already been pointed out, the determination of the comparative oiliness or greasiness of liquids and soft solids; properties upon which the power of lubricants to prevent the abrasion and wear of contact surfaces largely depend. The method which has been most generally adopted to determine such properties has been to imperfectly lubricate the bearings, and thus allow the surfaces to approach each other so closely that the oil pressure-film cannot form properly. It is essential that the bearing surfaces should come into close juxtaposition, if we are to obtain a correct estimate of the value of different brasses, bronzes, and white metals, for these metals are only used to enable the bearing to carry its load without suffering abrasion when the conditions of running are such that the oil pressure-film, maintained by the viscosity of the lubricant, cannot form, and the surfaces approach each other closely. For tests of this kind, the brasses should be allowed to extend over only about one-fifth or one-sixth of the circumference of the journal, and the lubrication may be supplied by means of lubricators or well-moistened pads at the sides.

Supposing two oils are to be compared one with another, testing should be commenced at a speed of about 9 inches to one foot per minute, and at the highest pressure which the oil and bearing will safely carry without seizing. It will be found, as a rule, that this pressure will be greater the higher the viscosity of the oil. Repeated tests should be made with the same oil, at the same pressure and speed, until successive curves, each corresponding to one complete to-and-fro movement of the brasses along the journal, become practically uniform. Three curves should then be measured with the planimeter and the average friction calculated. Curves obtained at this slow speed and at high pressures will probably be very irregular in shape, owing to variations in the frictional resistance, due to slight irregularities of the surface, but if a smooth curve be obtained it will not, of course, be necessary to use the planimeter, and the average deflection of the pendulum can be read off directly from the scale on the arc. If the friction show a tendency to diminish continuously, the brasses are probably not properly bedded to the journal, and the process of wearing them down must be continued.

Having obtained satisfactory curves from one oil, the journal, bearings, and lubricators should be cleaned, and the other oil tested in a similar manner. Further tests should then be made with both oils, first at from 5 to 7 feet per minute, and then at 100 feet per minute. It will be found that, as the speed is increased, greater loads can be put upon the bearings. At these higher speeds, also, the friction will be less variable, the curves traced on the diagram will be more regular in form, and an average deflection of the pendulum can usually be read off directly on the arc.

In the slow-speed tests, the temperature of the bearings and journal will scarcely be affected by the friction during the test, but in the tests made at a speed of 100 feet per minute, the rise of temperature of the brasses will be comparatively rapid and may be made the basis of a test. For this purpose, the machine should be allowed to run until a definite temperature of, say, 80° F. is reached. The pen should then be dropped on the paper, the time noted, the counter index read off, and the average deflection of the pendulum observed and recorded. When the thermometer indicates 85° F., the time and average deflection of the pendulum should again be recorded. These observations should be repeated at intervals corresponding to every five degrees rise in temperature, until either the temperature has risen to, say, 140° F., or the journal has performed 30,000 revolutions. Some tests made in this way are recorded in Table CXL.

Table CXL.

Tests made at a Speed of 98 feet per minute.

Description of Oil		Olive.	Lard.	Rape.	American Mineral Oils.			Russian Mineral Oil
					"900/7."	Solar Red Engine.	Special Red Engine.	
Specific gravity at 60° F.,		0·916	0·917	0·914	0·906	0·917	0·936	0·907
Viscosity at 60° F.,		0·98	0·98	1·16	1·14	2·06	3·0	3·48
Number of revolutions,		30,000	30,000	30,000	30,000	30,000	29,496	32,000
Temperature rose from 80° F. to,		108·5°	105·0°	108·5°	106·5°	115·2°	113·8°	117·2°
Coefficient of friction fell during test	from	·0051	·0044	·0055	·0046	·0074	·0078	·0085
	to	·0031	·0030	·0035	·0031	·0037	·0037	·0037

The results recorded in Table CXLI. were obtained by testing different oils at a nearly uniform speed of 7·2 feet per minute, and under a constant average load of 271 lbs. per square inch of bearing surface (measured along the arc of contact). The tests were made consecutively, in the order stated.

The mixtures used in five of the tests were made with the same samples of mineral and rape oils as were used for the remaining three tests. It will be observed that, at the comparatively low speed used, both the mineral oils gave lower coefficients of friction than the rape oil, owing to their much higher viscosity, but the mixtures gave lower coefficients than either of the pure oils. It is also remarkable that the mixture of Russian oil with 25 per cent. of rape oil gave a much lower friction than the mixture with 75 per cent. of rape oil, and the same result was obtained on repeating the test; see No. 114. The almost identical results obtained in tests Nos. 109 and 114 prove the comparative accuracy of the series.

The results recorded in Table CXLII. show, in an interesting manner, how the friction changes with the load at low speeds, how much more rapidly it changes at a speed of less than 1 foot per minute than at nine times that speed, how greatly an increase of speed may affect the friction when the load is constant, and also what an important influence the viscosity of the oil has upon this as well as, generally, in reducing the friction at low speeds. The marked differences in friction-reducing power at these low speeds between the three fatty oils, and between rape oil and a mineral lubricating oil of very nearly the same viscosity, will also be noted.

TABLE CXLI.

SPEED, 7·2 feet per minute.
AVERAGE LOAD, 271 lbs per square inch of bearing surface.

Test No.	Oil Used.	Viscosity at 60° F.	Average Coefficient of Friction	Temperature of Bearings.
107	American mineral oil (0·936), .	3·0	·0035	63° F.
108	Russian mineral oil (0·907), .	3·18	·0035	65° F.
109	Russian mineral oil, 75%, . Rape oil, 25%, ...	...	·0023	65° F.
110	Russian mineral oil, 25%, . Rape oil, 75%, ...	...	·0037	65° F.
111	Rape oil (0·914), ...	1·16	·0042	66·5° F.
112	American mineral oil, 75% . Rape oil, 25%	...	·0034	62° F.
113	American mineral oil, 25% . . Rape oil, 75%	...	·0033	65° F.
114	Russian mineral oil, 75% . . Rape oil, 25%	...	·0025	66·5° F.

No doubt the speeds used were very critical ones. With a speed of only 0·8 feet per minute and a load of 120 lbs per square inch, the olive and lard oils were not sufficiently viscous to form a perfect film of oil between the brasses and the journal, but the much thicker Russian mineral oil forced the bearings further apart and gave a much lower coefficient of friction.

TABLE CXLII.

		Olive Oil.	Lard Oil.	Rape Oil.	American Mineral Lubricating Oils.			Russian Mineral Lubricating Oil.
Specific Gravity at 60° F., .		0·916	0·917	0 914	0·906	0 917	0·936	0·907
Viscosity at 60° F., . .		0 98	0·98	1·16	1 14	2·06	3·0	3·5
Speed. — Feet per Minute.	Load. — Lbs. per square inch of Bearing Surface.	*Coefficients of Friction.*						
0·8	120	·0055	·0041	·0029	·0027	·0021	·0015	·0011
,,	139	·0150	·0128	·0043	·0214	·0042	·0012	·0012
7·0	139	0015	·0012	·0012	·0018	·0027	·0036	·0033
,,	157	·0018	·0016	·0016	·0021	·0026	·0039	·0031
,,	176	·0023	·0020	·0018	·0033	·0035	·0042	·0033
,,	195	·0040	·0034	·0019	·0035	·0042	·0042	·0034
,,	214	·0046	0043	·0032	·0058	·0055	·0057	·0053

At a speed of 7 feet per minute the film seems to have been fully formed by the lard oil under a load of 139 lbs.; the more viscous oils then increased the friction. Lard and rape oils gave less friction under these conditions than olive oil, and rape oil formed the film more completely than the American mineral oil of nearly equal viscosity. With a load of 214 lbs. per square inch, the speed was not sufficient to keep the film fully formed except, perhaps, with rape oil and the mineral oils of higher viscosity. With the comparatively light loads it is a peculiar circumstance that the film should have been so perfectly formed at very low speeds.

Useful comparisons of oils can thus be made with Thurston's machine, but we are bound to admit, as the result of much experience, that when facilities exist for making complete examinations of oil by viscosity and other laboratory tests, the results obtained by the machine can frequently be predicted, and are, therefore, of limited value. The fact is, that the machine tests which are most valuable are those made under conditions which are very liable to damage the friction surfaces, and which, therefore, make accurate comparisons between different oils extremely difficult to obtain. For instance, it would be useful to know, in comparing oils one with another, which oil will carry the greatest load without seizing; but if, in making such tests, the bearing surfaces should accidentally seize, even momentarily, damage may be done to them which would take a long time to repair, and which would necessitate the repetition of the tests which had been made previously to the damage.

Thurston states that his machine may be used for the purpose of ascertaining the gumming properties of lubricants, and also their durability. No doubt with care some idea on these points may be obtained by the use of mechanical testers, but such tests are usually better made by physical and chemical methods.

Many lubricants when exposed to the air take up oxygen and become thick, *i.e.* they gum. This change in the viscosity may be scarcely appreciable when the liquid is kept in bulk, but when it is spread over a bearing as a thin film and exposed to the air, it may rapidly become a sticky mass and cease to lubricate. Although the extent to which this change takes place can be more satisfactorily measured by methods which have already been fully described (p. 352 *et seq.*), useful information may sometimes be gained by measuring the effect produced upon the friction coefficient. The bearings should be lubricated with just sufficient oil to wet them well and yet not run off. The journal is then run at a speed of about 100 feet per minute with a very light load, and the friction and temperature noted when they have ceased to vary appreciably. Both brasses are then removed, and the contact surfaces, protected from dust and dirt, are allowed to remain exposed to the air for a day or two. The brasses are then replaced in the machine and a test made as before. If the oil has thickened, the friction and heating will be greater than before. Tests of this kind are, however, very likely to injure the friction surfaces, and it is, therefore, very questionable whether it is worth while to make them.

Many lubricants which are liable to gum may also become acid and attack the bearing surfaces. Metallic soaps are thus formed, which, dissolving in the lubricant, cause it to thicken. Mineral oils may contain light constituents which evaporate and leave thicker residues behind. For these and other reasons, an increase in the friction and temperature of a bearing after standing for a time does not prove that the oil has really gummed by oxidation.

For tests of durability, the lubricant may either be supplied continuously in such small quantities that it shall not run off the bearing, but shall yet wet it well, or pads soaked with a definite quantity of oil may be lightly pressed against the sides of the journal. The machine is then allowed to run until the friction and temperature begin to rise unduly. For some time after starting, the lubricant remains in good condition, the temperature becomes steady, and the friction reaches a minimum. As soon, however, as the lubricant thickens or becomes charged with the material worn off the bearings, or with soaps resulting from its acidity, the friction and temperature begin to rise. The particular oil the smallest quantity of which will keep the bearing in good condition, is considered the best to use for the particular load and speed of rubbing.

When the lubricants are good and are little affected by the atmosphere or the metallic surfaces upon which they rest, they continue to keep the bearings cool much longer than when they are acid, oxidisable, or contain light and volatile constituents.

Ingram and Stapfer's Oil Tester.—This machine, shown in fig. 138, is furnished with two frictional surface steps, one above and one below the journal, each step or bearing covering nearly half the circumference and pressed against the journal by a weighted lever, permitting a heavy load to be put upon the bearing surfaces. The journal and steps having been cleaned, a small weighed or measured quantity of oil is placed upon them, and the machine is driven at a speed of 1500 revolutions per minute until the temperature indicated by the thermometer reaches 200° F. It is then stopped, and the number of revolutions read off on the counter. That oil which permits the greatest number of revolutions to be made is considered the best oil. The results obtained with this machine depend partly upon the viscosity of the oil, but partly also upon its oiliness, and as a workshop appliance for roughly comparing the lubricating values of oils it has its uses. We describe this machine because it has been on the market for a great many years and a large number are in use, but for obtaining results of real value it has been superseded by the modern machines described in the first part of this chapter.

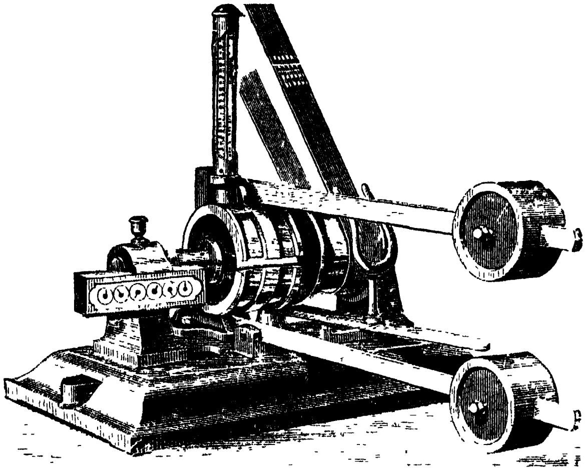

FIG. 138.

Beauchamp Tower's Machine.—With this machine, a series of experiments, now become classical, was made on the friction of journals by a Committee of the Institution of Mechanical Engineers.[1] By using pad and bath lubrication, and running the journals at moderately quick speeds, results were obtained which were closely in agreement with each other, and which demonstrated that under some conditions of running the friction of a journal is extremely small, and is independent of the nature of the contact surfaces. A theoretical

---

[1] *Proc. Inst. Mech. Eng.*, 1883, pp. 632–652.

examination by Osborne Reynolds[1] of the results obtained showed that the friction was wholly due to the viscous properties of the lubricant, and independent of the nature of the surfaces and of the oiliness or greasiness of the lubricant used.

Upon the rotating journal A, fig. 139, rests a brass bearing B, held in a frame C. A knife edge, secured to this frame exactly beneath its centre, supports the weights W by means of which the load is applied. The turning moment, resulting from the friction of the journal and brass, is balanced by means of weights placed in the scale pan slung from the light iron frame D. A pointer E, and graduated scale, indicate when the frame is in its normal position. The bottom of the journal is kept well lubricated by the oil-bath H into which it dips.

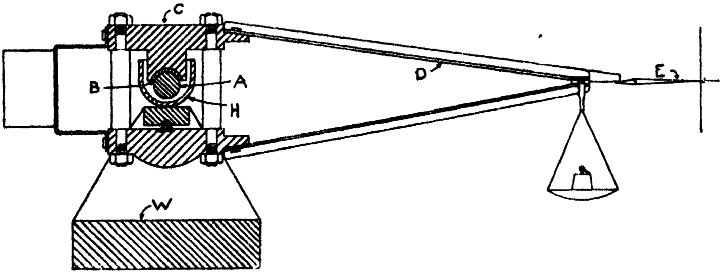

FIG. 139.

When working with a weight w in the scale pan, the coefficient of friction is obtained as follows:

$$Fr_0 = wr. \quad \therefore \; F = \frac{wr}{r_0}$$

and

$$\mu_1 = \frac{F}{P} = \frac{wr}{Pr_0}.$$

When working with a pointer E and no scale pan, and measuring the angle θ, the centre of gravity of the weight being displaced a distance r^1 on either side of the centre of the journal, $W = P$,

$$Fr_0 = Wr^1. \quad \therefore \; F = \frac{Wr^1}{r_0}$$

and

$$\mu_1 = \frac{F}{P} = \frac{r^1}{r_0}.$$

Goodman's Friction Testing Machine.—The earlier form of this machine (figs. 140 and 141) is a modification of that used by Tower, the correctness of whose experimental work has been amply confirmed by its use. A number of the experimental results obtained with it have already been given. It is thus described by Goodman:

A is the journal on which the frictional resistance of the brass B is measured. The latter is tightly fitted into the cast-iron stirrup C, from which the weights are suspended by the link D, which rests on the knife edge E. The oil-bath F is filled with oil, into which the bottom of the journal dips. A lubricator G is provided for siphon experiments. The temperature of the journal can be kept fairly constant by using the circulating water-pipe H, the waste from which is carried away by the pipe J. The shaft is driven by the lathe chuck K, the revolutions of which are registered by the counter L. The temperature of

---

[1] *Phil. Trans.*, 1886, p. 165.

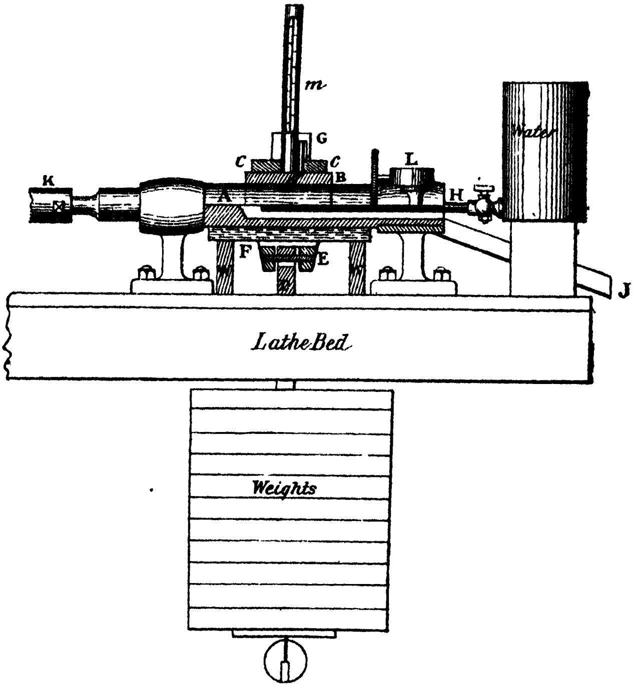

FIG. 140.

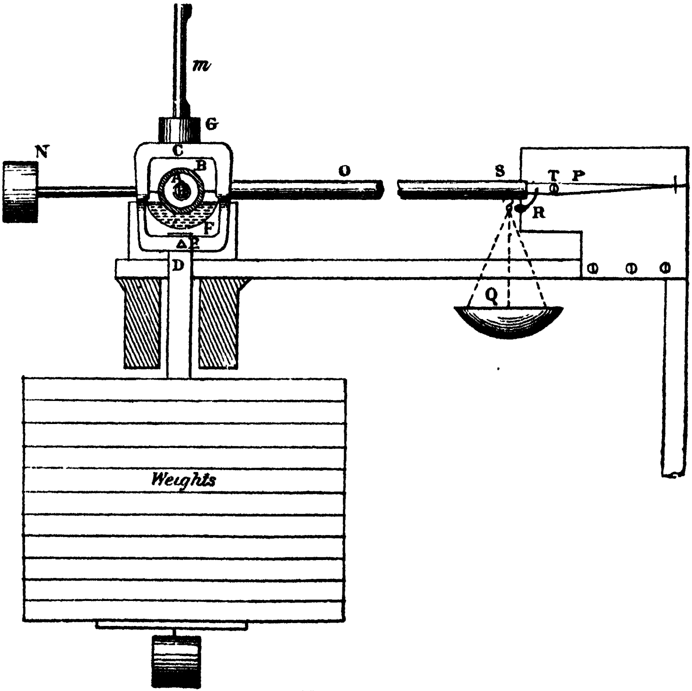

FIG. 141.

the brass is registered by the thermometer *m*. The arm O carries the scale pan Q, which is suspended from the knife edge S, the whole of which is counterbalanced by the small weight N. The pointer P, the long arm of which is balanced by the small weight R, indicates when the arm O is horizontal.

An improved form of this machine, described by Goodman in Eng. Patent No. 22295 of 1895, is illustrated in longitudinal section in fig. 142. The weight is suspended from the stirrup by means of a parallel motion device, which permits the stirrup and the bearing fixed in it to tilt or rotate through a small angle without altering the central direction or pull of the load. The weight is applied by means of levers, and the friction is measured by means of a floating steelyard attached to the stirrup.

Referring to the figure, A is the test bearing and B the axle upon which it rests. C is the stirrup and D the floating steelyard. E and F are a pair of connecting links of equal length, suspended from the stirrup C by means of the knife edges G and H respectively, which are fitted in the sides of the stirrup C. The lower ends of the links E and F carry suspended from them, by means of knife edges I and J, the cross-bar K. Midway between the knife edges I and J, the cross-bar K is provided with a knife-edge fulcrum L, from which is suspended the central connecting link M. The lower end of the link M is connected by a knife edge N with the lever O of a compound or other lever arrangement.

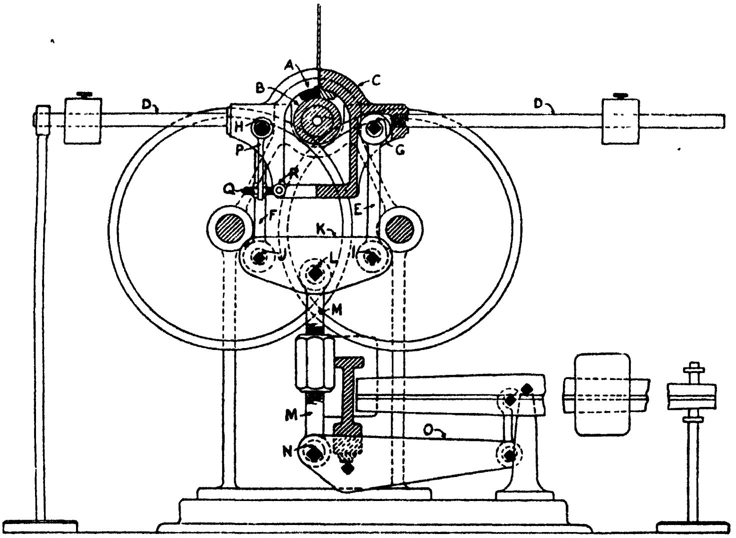

FIG. 142.

It will be evident that owing to the parallel motion device formed by the stirrup C, cross-head or cross-bar K, and links E and F, the pull of the link M is transmitted through the centre of the axle B parallel to the links E, F, and M, whether the floating steelyard D be in a horizontal position or be tilted through a small angle by the friction between the bearing and axle.

The knife edge H is prolonged at one side, so as to be fitted with a lever P. The outer end of the lever P is provided with a hole, through which passes the screwed rod Q, the rod Q being hinged at R to the stirrup C. Two nuts, one on each side of the lever P, fitted on the rod Q, hold the lever P firmly in position. If the bearing edge of the knife edge H is not at exactly the same distance from the centre of the axle B or bearing A as the knife edge G, then, by slackening one of the said nuts and tightening up the other, the knife edge H is tilted in one direction or the other, so as to move the bearing edge of the same nearer to or farther away from the centre of the axle B or bearing A, as may be required to make the said distances exactly equal.

With this machine Goodman has carried out an extended series of tests of antifriction metals, ball bearings, and roller bearings.

Stroudley's Machine.— This machine was built so as to make the conditions of running closely resemble those of a carriage or locomotive axle. It has only one bearing, which rests upon the revolving axle A, fig. 143. The bearing carries the beam C, which has knife edges at the ends, upon which rest the suspending links and weights for applying the load. G is a small beam and pan.

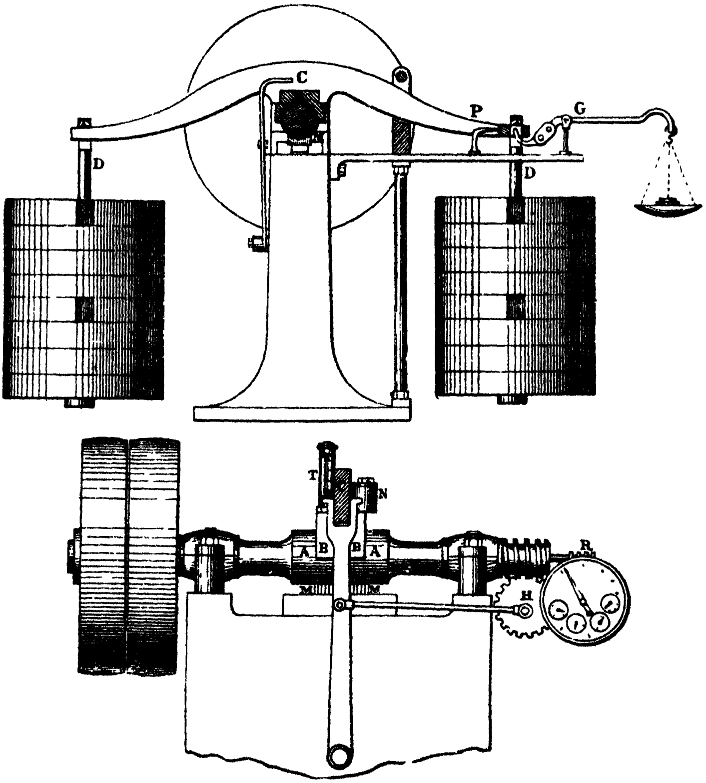

Fig. 143.

When the journal is in motion the link D is depressed, but by placing weights in the pan of the small balancing lever it is raised until the pointer P indicates that the beam is in its normal position. The weights in the pan are then a measure of the frictional resistance. H is a small eccentric and wheel driven by a worm on the main shaft. It keeps the brass continually moving to and fro, sideplay being necessary to cause the surfaces to remain free from grooves. M is an oil-pad, which keeps the journal constantly lubricated, N is a siphon lubricator, R is a revolution counter, and T a thermometer to show the temperature of the journal.

This machine, Goodman says, when accurately adjusted, runs rather more steadily than Tower's machine, consequently there is less liability to error in taking readings. The lubricating arrangements are easily accessible, and the bottom of the shaft is quite open. Then, again, the load is conveniently situated, being quite free from the framing, a very important point, considering that the weights often amount to as much as 2 cwts. each. But the disadvantage in the machine is that the most scrupulous accuracy is required in making the weights exactly equal, whilst the beam and links must also be exactly balanced. The balancing of the weights and beam is effected as follows :--

After the beam has been machined very accurately, so that the jaws into which the brasses fit are central with the knife edges on which the weights hang, a temporary knife edge is fitted in the centre of the jaws, and the beam itself balanced upon it. The links to carry the weights having been hung on and balanced, the knife edge is removed, and the brass having been fitted in is placed on a short mandril which it exactly fits. The whole is now placed on a smooth level plane, and the beam again balanced by adjusting the brass in the jaws until the centre of the mandril is central with the knife edges; by this means, a practically frictionless vibrating balance is obtained. The weights themselves are placed on the links, and each pair balanced and marked.

After the machine has been running for some time its balance is disturbed, unless the direction of motion has been periodically reversed. This results from the wear being chiefly confined to the " off " side of the brass, a point to which attention has already been called. The inequality of wear is occasionally very rapid under heavy loads, a few days' hard running causing the brass to wear 0·01 inch out of centre. Suppose the load to be 1 ton, or 2240 lbs., which, with an equivalent length of arm of 72 inches, gives an error of

$$\frac{0{\cdot}01 \times 224}{72} = 0{\cdot}311 \text{ lb.}$$

in the scale pan; this, with a 7-inch shaft, becomes an error of 0·0028 in the coefficient of friction, or an error in some instances of as much as 100 per cent. Thus, a very small error in construction, or any displacement due to uneven wear, has a serious effect upon the readings, a possibility which should never be lost sight of.

The coefficient of friction is calculated as follows:—

Let r_0=radius of journal.
P=weight on brass.
F=total frictional resistance.
r=length of main beam.
$\frac{y}{x}$=leverage of scale beam.
W=weight in scale pan.

Then
$$\frac{Wry}{x} = Fr_0.$$
$$\therefore \ F = \frac{Wry}{xr_0}$$
and
$$\mu_1 = \frac{F}{P} = \frac{Wry}{Pxr_0}.$$

Stanton's Oil-testing Machine.—This machine was designed to obtain more accurate information respecting the pressure distribution between a journal and bearing, and is described in Dr. Stanton's Thomas Hawksley Lecture to the Institution of Mechanical Engineers in 1922,[1] from which the following notes are abstracted.

"In the preliminary experiments with a cylindrical bush with the object of investigating the possibility of setting up a state of lubrication extending over the whole of the cylindrical surface, which had been treated theoretically by Harrison,[2] it was found that, although rupture of the film took place on the negative pressure side, the restricted arc of contact of the film remained quite definite in extent, and it was possible to maintain steady lubricating conditions by supplying oil at a constant rate and at a low head through one end of the bush and allowing it to drain from the other end. For the purpose of the present experiments in which the difference of the radii of the bearing and journal were measured in the unstrained state, and the success of which depended on any distortion of the bearing under running conditions being negligible, this method of oil supply appeared to possess one marked advantage over the use of a half-bearing and a bath of lubricant, in that this distortion under the load was thus reduced to a minimum. Another consideration which weighed in favour of its adoption was that the 'bath method' appears to many engineers to be a somewhat artificial one, and removed from practical conditions, whereas the one contemplated was one which could be adopted under most practical circumstances. It was, therefore, decided to use a cylindrical bush with end lubrication instead of the arrangement adopted by Tower.

"*The Method of measuring the Pressure Distribution.* In Tower's experiments the intensity of pressure of the oil film was only measured at three points in any cross-section, so that the observations were insufficient to give any accurate idea of the manner in which the pressure varied throughout the whole arc of contact. For this purpose the pressures were required at intervals of every 1° or 2° of arc. As the mechanical difficulties of making pressure holes in the surface of the bearing and of connecting such pressure holes by independent leads to a pressure-gauge were very considerable, and, further, the presence of such a large number of holes in the surface of the bearing being in itself objectionable, some consideration was given to the possibility of using a simple pressure-hole connected to a Bourdon pressure-gauge by means of a flexible pipe and of obtaining the distribution of pressure by rotating the bearing through a known angle between successive observations. The validity of this method depended of course on the possibility of the existence of a film between surfaces of uniform curvature throughout the whole arc of contact, but, as this assumption had already been incorporated into the experimental method which was to be put on trial, there was no objection to its adoption.

"*General Arrangement of the Apparatus.*—This is shown in fig. 144. It will be seen that the bush, which is of phosphor-bronze ground and lapped out to the required diameter, is supported in a steel housing by means of ball bearings, thus affording means of independent rotation for the purpose of the pressure observations. The loading is obtained by cast-iron flitch plates bolted to the sides of the housing and carried by the two horizontal spindles shown. At the end of one spindle is a small oil dash-pot to damp out any oscillations of the bearing, and at the extremity of the others a scale-pan and calibrated spring for the purpose of measuring the frictional torque. A special feature

---

[1] *Jour. Inst. Mech. Eng.*, 1922, ii. 1117–1145.

[2] *Trans. Cambridge Phil. Soc.*, xxii. (1913).

is a load-relieving device (not shown) by means of which the load is gradually taken off the journal before stopping its rotation, and for the gradual imposition of the load in starting up. The journal, which is made of tool steel hardened and ground, was overhung and held by a chuck at the end of the driving shaft. The motor driving the shaft was provided with a speed-reversing switch. By this means an experiment at a given speed was repeated with the direction of rotation of the journal reversed, and the difference of the torque readings was then taken to be twice the torque on the bearings. Inaccuracies due to the want of precision in the zero reading of the torque arm were thus eliminated.

"The Bourdon pressure-gauge for measuring the oil pressure was carried by the steel housing of the bearing and was connected to the pressure-hole by soft fine bore copper tubing, which could be bent into any desired position when rotating the bearing into the different angular positions of the pressure-hole. In order to obtain reliable and rapid indications of the pressure, considerable care was necessary to get rid of all the air in the gauge tube and its connections before finally coupling up to the pressure-hole.

"For the measurement of the temperature of the film an iron-constantan thermo-junction was inserted into a small hole drilled in the crown of the bearing, and in such a position that the junction itself was in contact with the surface of the revolving journal. The leakage of oil through this hole was prevented by a special gland."

The results of Dr. Stanton's experiments with this machine are referred to in Chapter V. on pp. 93 and 115.

Benjamin's Machine.- The experiments by Mabery and Matthews referred to on p. 136 were made on a machine constructed by Prof. C. H. Benjamin for the mechanical laboratory of the Case School of Applied Science, Cleveland, Ohio.[1] The test journal is 8 inches long by 3·22 inches diameter. The bearing is a white metalled sleeve in two halves, held in position on the journal by cast-iron blocks, and the load is applied to both upper and lower brasses by means of two powerful helical springs resting on the upper block and compressed by nuts, which, when screwed down on the rods which pass through the springs and blocks, draw the blocks together. Diagonal grooves are cut X-wise in the bearing surface of the upper brass, with a hole for the admission of oil at the point of intersection of the grooves. The lower brass has no grooves. Attached to the upper block is a lever arm extending outwards horizontally, near the extreme end of which is a knife edge which rests upon a scale pan and records the pressure due to the friction. The lubricant is fed through a sight-feed oil-cup attached to the upper bearing, and the temperature is measured by a thermometer inserted in the bearing close to the journal.

The machine is motor-driven at a speed of 500 revolutions per minute, maintained nearly constant by a water rheostat, and the oil is supplied to the test-bearing at the rate of 6 to 8 drops per minute for two hours, the temperature and friction being recorded every five minutes. The oil supply is then stopped, and the number of minutes the journal will run until the oil ceases to lubricate, shown by a sudden rise in the friction and temperature, is taken as a measure of the "durability" of the oil.

By running the machine light, first in one direction and then in the other, and taking the mean load on the scale, the "lever arm constant" is obtained. The coefficient of friction (μ_1) is then given by the following formula :—

---

[1] **For illustration and further description see paper on "Efficiency Tests of Lubricating Oils," by Prof. F. H. Sibley, *Amer. Soc. Mech. Eng.*, 1909.**

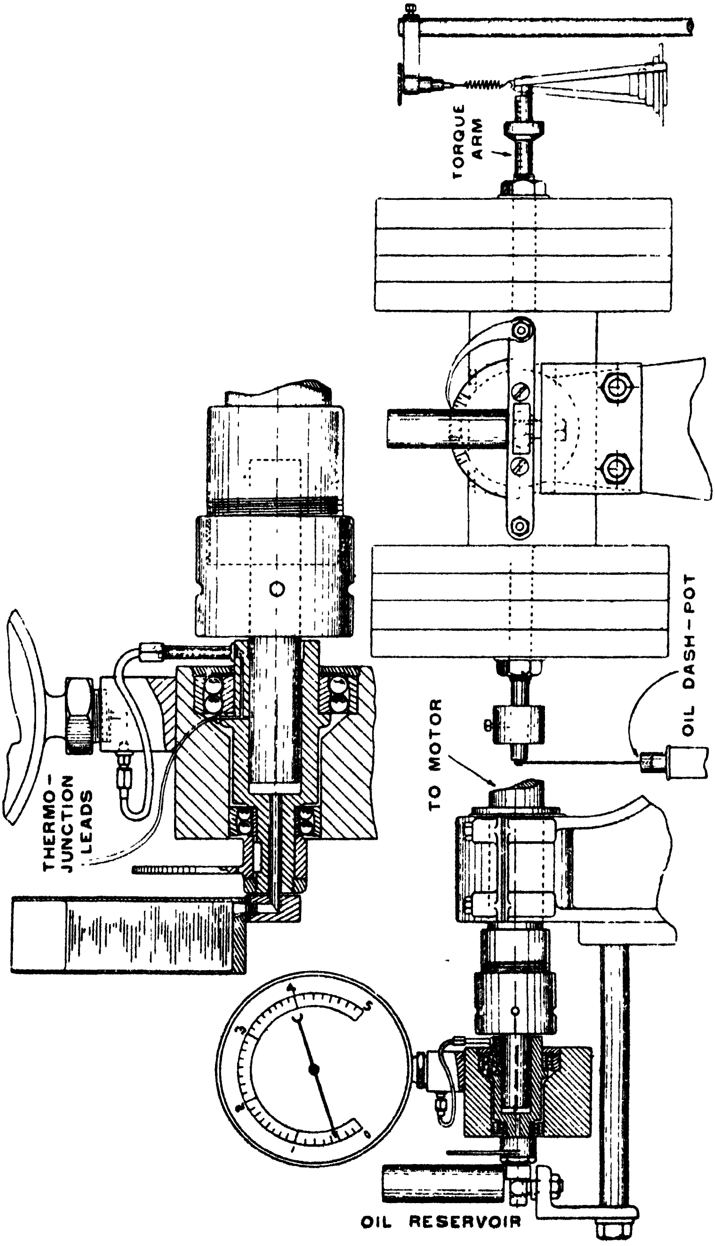

Fig. 144.
Scales: $\frac{1}{8}$ and $\frac{1}{4}$ full-size.

$$\mu_1=\frac{\text{scale reading (lbs.)}-13\cdot656\frac{31\cdot625}{1\cdot61}}{1300}$$

where 13·656 – lever arm constant (lbs.).
31·625 = radius of lever arm (inches).
1·61 = " " journal (").
1300 = load (lbs.).

Friction of Screws. The friction of screws has been experimentally investigated by Kingsbury[1] under the conditions of very slow motion, free lubrication, and pressures varying from zero to 14,000 lbs. per sq. inch of bearing surface. The machine used was specially designed for the purpose. The tests were made upon a set of square-threaded screws and nuts of the following dimensions:

Outside diameter of screw, ...	1·426 inch.	
Inside diameter of nut, ...	1·276 "	
"Mean diameter" of thread, . . .	1·352 "	
Pitch of thread, ...	$\frac{1}{3}$ "	
Depth of nut, ...	$1\frac{1}{16}$ "	(effective).

The nuts fitted the screws very loosely, so that all friction was excluded, except that on the faces of the threads directly supporting the load. The screws and nuts were flooded with the oil when placed in the machine, which was operated by hand gearing, the screw being driven at a very slow rate (not more than one revolution in two minutes) until the pressure was raised to the desired amount, the friction being measured by the swinging out of a pendulum which carried the nut and automatically recorded on a revolving drum. The results obtained are set out in Tables CXLIII. to CXLVII. taken from the author's paper.

TABLE CXLIII.—MEAN COEFFICIENTS FOR HEAVY (MINERAL) MACHINERY OIL (Sp. gr. 0·912).

(Actually read at 10,000 lbs. pressure per sq. inch. Each figure is the average for eight cards.)

Screws.	Nuts.			
	6 Mild Steel	7 Wrought Iron	8 Cast Iron.	9 Cast Brass.
1. Mild steel, ...	·141	·16	·136	·136
2. Wrought iron, ...	·139	·14	·138	·147
3. Cast iron, ...	·125	·139	·119	·171
4. Cast bronze, ...	·124	·135	·172	·132
5. Mild steel, case-hardened, .	·133	·143	·13	·193

Mean of all, 0·1426.

Highest for a single card (screw 5, nut 9), ...	0·20.
Lowest " " (screw 3, nut 8), ...	0·11.

---

[1] *Trans. Amer. Soc. Mech. Eng.*, xvii. (1896), 96.

TABLE CXLIV.—MEAN COEFFICIENTS FOR LARD OIL.

(Actually read at 10,000 lbs. pressure per sq. inch. Each figure is the average for four cards.)

Screws.	Nuts.			
	6 Mild Steel.	7 Wrought Iron.	8 Cast Iron	9 Cast Brass.
1. Mild steel,	·12	·105	·10	·11
2. Wrought iron,	·1125	·1075	·10	·12
3. Cast iron,	·10	·10	·095	·11
4. Cast bronze,	·1150	·10	·11	·1325
5. Mild steel, case-hardened,	·1175	·0975	·105	·1375

Mean of all, 0·1098.

Highest for a single card (screw 4, nut 9), ... 0·25.
Lowest „ „ (screw 3, nut 8), ... 0·09.

TABLE CXLV.—MEAN COEFFICIENTS FOR HEAVY MACHINERY OIL AND GRAPHITE.

(Actually read at 10,000 lbs. pressure per sq. inch. Each figure is the average for four cards.)

Screws.	Nuts			
	6 Mild Steel	7 Wrought Iron.	8 Cast Iron.	9 Cast Brass.
1. Mild steel,	·111	0675	·065	·04
2. Wrought iron	·089	·07	·075	·055
3. Cast iron,	·1075	071	·105	·059
4. Cast bronze,	·071	·015	·044	·036
5. Mild steel, case-hardened,	·1275	·055	·07	035

Mean of all, 0·07.

Highest for a single card (screw 5, nut 6), ... 0·15.
Lowest „ „ (screw 5, nut 9), ... 0·03.

TABLE CXLVI.—MEAN COEFFICIENTS FOR HEAVY MACHINERY OIL.

(Actually read at 3000 lbs. pressure per sq. inch. Each figure is the average for four cards.)

Screws	Nuts.			
	6 Mild Steel.	7 Wrought Iron.	8 Cast Iron.	9 Cast Brass
1. Mild steel, ...	·147	·156	·132	·127
2. Wrought iron, ...	·15	·16	·15	·117
3. Cast iron, ...	·15	·157	·14	·12
4. Cast bronze, ...	·127	·13	·13	·14
5. Mild steel, case-hardened, .	·155	·1775	·1675	·1325

Mean of all, 0·1433.

Highest for a single card (screw 5, nut 7), ... 0·19.
Lowest „ „ (screw 2, nut 9), ... 0·11.

Kingsbury concludes from his experiments that for metallic screws in good condition, turning at extremely slow speeds, under any pressure up to 14,000 lbs. per sq. inch of bearing surface, and freely lubricated before application of pressure, the following coefficients of friction may be used:-

TABLE CXLVII.—COEFFICIENTS OF FRICTION.

Lubricant.	Minimum.	Maximum	Mean.
Lard oil, ...	·09	·25	·11
Heavy (mineral) machinery oil, .	·11	·19	·143
Heavy machinery oil and graphite in equal volumes, ...	·03	·15	·07

Kingsbury does not consider that the tests prove that any one of the metals used develops less friction than any of the others, under the methods of testing employed, although such results might be inferred from Table CXLV., for instance, in which the coefficients for the brass nut are uniformly lower than for any of the others. Nor does he believe that the method of testing employed is the best possible; a number of cast-iron nuts and screws tested by themselves, and a number of steel nuts and screws similarly tested, might give results showing less variation than is evident in the records given above, and hence more definitely comparable with each other.

CHAPTER XI.

APPLIANCES FOR LUBRICATION (LUBRICATORS, ETC.).

Introductory.—In very many instances the lubrication of bearings is effected merely by cutting holes or grooves in the brasses, and pouring oil into them, or on the moving parts, from an oil-can. All kinds of control gear, which only move when some kind of adjustment is being effected, merely require a little oil or grease on the bearings applied in this way occasionally. This is also all that is necessary for small machines such as sewing machines, clocks, hand-drills, cart wheels, locks, bolts, etc. In other cases, the adsorbed film which covers all surfaces is sufficient, as in the case of camera shutters, telescope and microscope tubes and the joints of mathematical, drawing and surveying instruments. Even in these cases, the manufacturers often use special lubricants for moistening the surfaces in the first instance. For larger machines and heavier loads it is necessary to keep the bearings regularly supplied with oil, and although a bath of oil or an oily pad are the most satisfactory methods of lubrication, there are a very large number of instances in which these methods cannot be adopted with advantage.

In many machines, lubrication is effected without the use of any special lubrication device, the axle-box or housing containing a reservoir for oil, often packed with felt, which is periodically moistened, or the oil is lifted from the reservoir on to the shaft by a flange, ring, or loose endless chain passing over the journal. Several such contrivances are figured in this and the following chapter.

Beauchamp Tower showed that the best lubricating effect was produced when the journal rotated in an oil-bath; but with horizontally rotating shafts or journals this method cannot be adopted, as difficulties arise through leakage of oil. Fortunately, a pad of cotton-wool pressed against the underside of the journal, wicks from which dip into an oil reservoir below, gives frictional results almost if not quite as good as when the oil bath is used. In all cases where this method of lubrication is depended upon, lubricators are not required, the lubricant being run into the bearing from an oil-can. Several such cases will be dealt with in Chapter XII., dealing with the design of bearings.

At one time, for the lubrication of steam cylinders, forms of lubricators were generally used which could not be used for any other purpose. Now, however, lubricators are made which will supply oil both to journals and cylinders. We shall, consequently, consider lubricators rather from their own peculiarities of design than from a consideration of the purposes for which they are used.

Oilers.—When the lubricant is merely supplied to the bearing occasionally, through a hole leading to a groove or reservoir in the bearing, it is advisable to have some method of protecting the orifice from dust and dirt. A large number of simple fittings have been devised for this purpose, generally called *oilers.*

The most simple form is the Press Button Oiler [1] illustrated at A, fig. 145. Here a brass cage, which can be pressed into an oil holę, is fitted with a spring and ball. The ball closes the hole from the inside and can be pushed on one side by the spout of the oil-can. Another, known as the Helmet Oiler, B, fig. 145, can be opened and closed at will. The Helmet Oiler can be left open, but the Press Button form cannot.

Such contrivances are universally used for bicycles, motor vehicles, and all positions where dirt and dust are encountered. Indeed all small ball bearings are fitted with them, as for such bearings very little lubrication is required, but it is most important that dust, dirt, and water should be kept out.

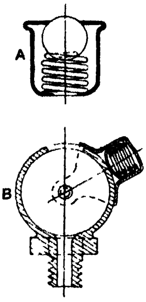

FIG. 145.

Grease Gun Lubrication. In the majority of cases, for bearings which only require occasional lubrication, such as the ball-bearing hubs of motor cars, grease is used instead of oil. Such lubricants have to be forced through "oilers" similar to the one illustrated in fig. 145, and this must be done under pressure. What is known as a grease gun is generally used for this purpose. Fig. 146 shows how this instrument is designed. The grease is packed in a cylinder and can be ejected by screwing down the piston. When it is necessary to remove the piston for the purpose of filling up with grease, the piston is drawn back into the cap, and when the cap is replaced, the piston packing moves freely into the cylinder again without being damaged by the joint. At A A there are swivel joints, one at each end of the flexible pipe which passes to the nozzle and which can be screwed on to the oiler. The nozzle (fig. 147) is fitted with a valve, which remains closed when the gun is not in use and prevents the escape of grease. To the valve is attached a needle, and this needle comes into contact with the ball of the oiler when the nozzle is screwed to the oiler, opening it, and at the same time lifting the valve off its seat as shown in fig. 147. A gun of this description is supplied with the Armstrong-Siddeley motor car.

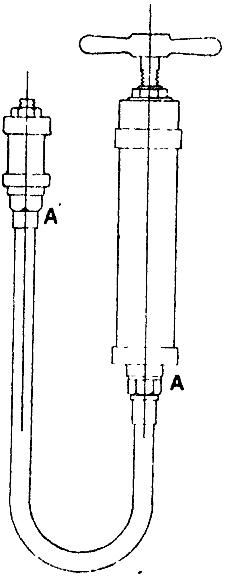

FIG. 146.

Grease Cups. For bearings which do not require much grease, especially ball-bearings, the ordinary grease cup is largely used. Many different designs are made, to meet the varied conditions under which they have to work.

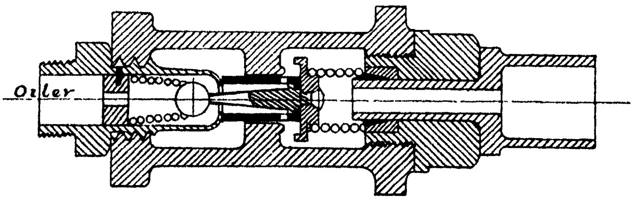

FIG. 147.

Fig. 148 illustrates a very simple design of grease cup. The cap is filled

---

[1] Made by the Mills, Mines, and Engineers Supply Company.

with grease and then screwed on to the base until the grease is pressed into the oilways of the bearing. Another form is shown in fig. 149; here the cap is fitted with a **T** handle to enable it to be screwed down easily, and the internal spring serves to mix the grease and prevent the cap from working loose. Still another form, fig. 150, is fitted with a spring to expel the grease. The rate of feed can be varied by means of the small screw in the discharge pipe. Before putting grease in the cup, the spring is compressed and locked in position by giving the handle a half turn. After screwing the cap in position the spring is released by giving the handle a half turn. Another cup is shown in fig. 151. Here the grease can be partly ejected by the spring, and the rate of flow regulated by the screw C. By screwing down the cap, a further charge of grease is pressed into the spring chamber.

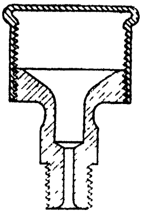
Fig. 148.

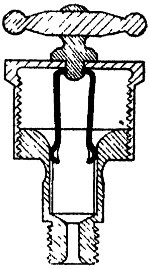
Fig. 149.

The Munro grease cup, which is extensively used, is illustrated in fig. 152. The grease cup has a cap which can be screwed down to any desired depth and fixed by the lock nut. There is a disc in the lower end of the cap enclosing an air space above it, and when the cap is screwed down on the grease, the grease drives the disc into the cap and compresses the air, the pressure of which slowly forces the grease through the outlet to the bearing. Before screwing the cap in position, the disc must be pulled out to the position shown in the drawing, and it must be seen that there is no grease above it in the cap. It is claimed that this grease cup supplies the lubricant very regularly to the bearing and in the quantities required.

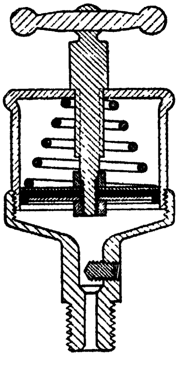
Fig. 150.

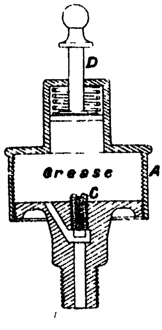

Fig. 151.

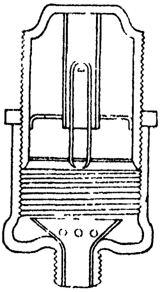
Fig. 152.

There are a very large number of grease-cup designs on the market made for special purposes, such as for loose pulleys, and users are recommended to consult reputable makers as to the best forms for any particular bearing.

Oily Pad Lubrication.—Plummer blocks for shafting have generally been made in very primitive designs, the shaft being held between two brasses, and supplied with oil occasionally. In many cases some form of automatic oil supply is used, but there is always risk of the bearing getting too little or too much of the lubricant. A considerable improvement can be effected by removing the top cap and brass of the Plummer block and replacing it by one on the Diamond system.[1] In this form there is a large cavity or aperture which can be filled with yarn and grease. The design is shown in fig. 153. The manufacturers recommend that the cavity be lined with "Diamond yarn," leaving one-half to two-thirds of the journal exposed, and that the remaining aperture be filled with "Diamond grease." In this way the grease is held in position and soaks well into the pad, forming a good lubricating film.

For the lubrication of journals, woollen or felt pads, kept moistened with oil and pressed against the journal, are now largely used. Journals or shafts should be kept uniformly moistened with oil, but should not receive such a quantity as to be thrown out in any great volume at the ends of an ordinary pedestal or axle-box, and wasted. But when proper means are adopted for preventing lateral waste, the pads may be partially immersed in the lubricant, or may obtain their supply of oil through wicks which dip into it.

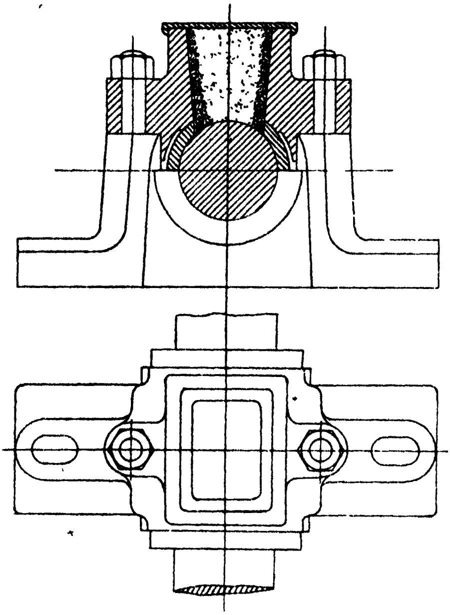

FIG. 153.

Even when the old methods of siphon lubrication are adopted, pads are frequently used as auxiliary lubricating contrivances, since they remain moist for long intervals of time and keep the bearings from becoming overheated in the event of the siphon wicks, or oil cups, ceasing to supply the lubricant.

So unquestionable have been the advantages gained by the oily pad system of lubrication, that it is now almost universally used for quick-running railway vehicles. Not only is the friction kept uniformly low and the consumption of oil remarkably small, but the number of heated journals has become almost a vanishing quantity. Quite a number of the bearings illustrated in Chapter XII. have the lubricants supplied by pads.

Fig. 213 on p. 534 shows the journal and axle-box of a railway vehicle lubricated in this manner. The woollen pad is attached to a light steel framework held up against the journal by means of light springs, and is supplied with oil by means of cotton feeders, dipping into a bath of oil at the bottom of the box. In the "Armstrong" oiler the pad is made of a mixture of wool and cotton, and is prevented, by means of *lignum vitæ* studs, from becoming flattened and glazed through excessive pressure on the journal.

In place of the pad and steel framework, the lower part of the axle-box may be filled with a mixture of horsehair, worsted, and cotton. The elasticity of the hair keeps the mixture open and pressed against the journal, the cotton and wool soak up the oil from the bottom of the box and supply it to the friction surfaces.

Experiment has shown that the more fully saturated the pads, etc., are kept, the smaller is the friction, and that the best result is obtained when the journal actually revolves in a bath of oil. From the descriptions of bearings

---

[1] The Diamond Lubricating Co., Ltd.

on pp. 529 to 548, it will be seen that it is possible to take advantage of the low frictional resistances which perfect lubrication gives without either incurring waste of oil or undue complication of parts. At the present time, the scientific design of bearings can perhaps only be regarded as in its infancy. But it is inevitable that, as the true principles of lubrication come to be better understood, the use of solid or semi-solid lubricants will be largely given up, and for all quick-moving machinery the oil-bath or its equivalent will be almost universally used.

Wick Lubricators. -Wick lubricators have always been regarded as reliable contrivances and are still extensively used. Their general form is illustrated in fig. 154. Here the hole leading to the bearing is in the centre of a reservoir for the oil, and as the wick will not lift the oil more than an inch or so the reservoir is shallow.

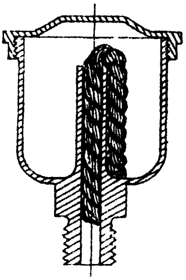

Fig. 154.

Caloin's automatic lubricator, with lever and float for keeping the level of the oil constant, is shown in fig. 155.

It consists of a rectangular box made of bronze and divided into two separate compartments, E and F, by a vertical partition G. These compartments are connected by a straight pipe, which is open at both ends, H H. This pipe runs along the bottom of the tank E till it reaches the centre, where it is fixed. The object of this pipe is to counteract any unevenness caused by the pitching and rolling of the boats when the lubricator is used for marine purposes.

The compartment E contains a certain number of small conduit pipes or holders J J J corresponding to the number of unions screwed to the bottom of the compartment E. Each of these unions is intended, by means of pipes,

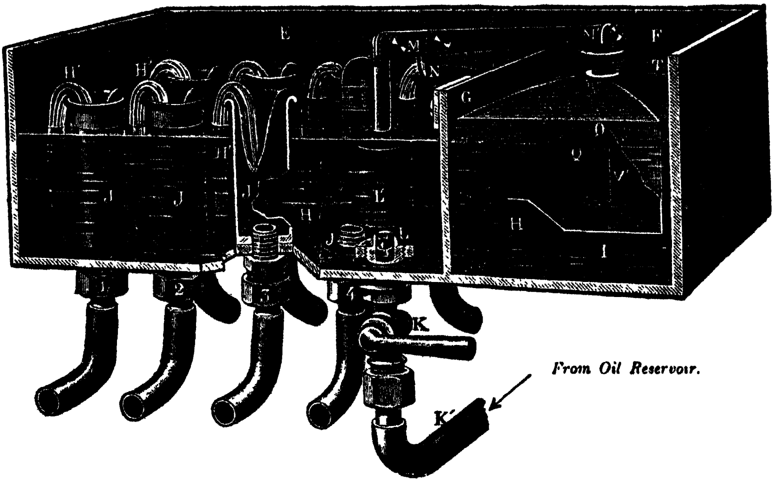

Fig. 155.

to feed a collector. The cock K, which is fixed to the bottom of this compartment, forms the communication between the latter and the oil reservoir, which is placed above the apparatus. In the upper part of this cock there is a seating, on which a valve L is seated, and which is united, by means of a joint, to a counter-weight, which, through the lever M M, raises or lowers a metal float Q in the other compartment F. A guide I is fixed in the bottom of compartment F, and, traversing the float, allows a vertical movement only.

In order to enable the height of the oil in the apparatus to be altered, the upper part of the float is fitted with an adjustable milled nut R. This nut has a screw of twenty-five threads per inch, and takes a similarly threaded pin jointed at the end of the lever M M. It is only necessary, therefore, either to screw or unscrew the nut in order to adjust the lever M, which is supported by a bracket fixed in the partition G. Two small sockets O V in the interior of the float prevent any oil penetrating to the interior of the float through the opening for the guide or the thread of the cap; and, further, the level of the oil in the apparatus is shown on a small graduated scale, and corresponding to the thread of the screw, which penetrates the nut of the float.

The wicks in the holders act as siphons When the level of the oil sinks the float does the same, and raises the valve, which allows oil to flow in, thereby raising the float into such a position that the aperture between the valve and its seating will only allow to pass a quantity of oil equal to that absorbed by the wicks. Each turn of the nut which regulates the float is shown by a small spring pawl T fixed on the top of the float and fitting into a notch on the nut. The valve rises according to the number of turns given to the nut, and allows the oil to flow into the distributor until the valve has regained its position. If, on the other hand, the cap of the nut is unscrewed, the valve closes the aperture, and will only open when the height of the oil corresponding to the number of turns of the screw has been absorbed by the wicks.

The *siphon wick lubricator*, as used for lubricating a piston rod, is shown in fig. 154. It consists of a shallow reservoir in which the oil is stored, and a central tube, leading to the part to be oiled, and having its upper orifice raised a little above the oil surface. Through this tube is passed a wick of cotton or worsted, one end of which is immersed in the oil, and the other end hangs downwards. Up the capillary spaces between the fibres of the cotton or worsted the oil makes its way, and passing down the tube, converts the capillaries into a number of small siphons, which slowly drain the oil out of the reservoir, and thus lubricate the opposing surfaces below.

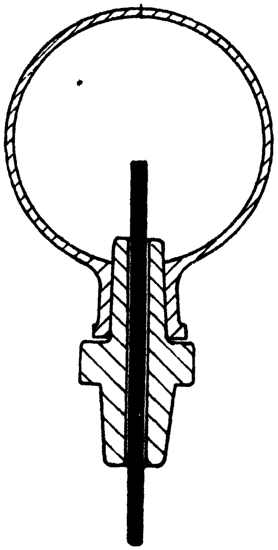

FIG. 156.

Needle Lubricators.- Although the old forms of lubricators are being dispensed with to a large extent in favour of more modern automatic contrivances securing more or less perfectly the advantages of bath lubrication, it is unlikely that they will be displaced entirely, for there are cases in which the conditions of working are such that the lubricant cannot be recovered, and must be supplied continuously in small quantities. Slide bars and piston rods are often cases in point. Needle lubricators are largely used for these and other purposes, and for shafting.

The *needle lubricator* shown in fig. 156 consists of an inverted glass reservoir with perforated wooden stopper, in which a metallic needle fits rather loosely. This needle rests upon the shaft. The up-and-down movement of the needle, caused by the rotation of the shaft, causes the oil to be slowly expelled from the reservoir, and allows its place to be taken by air which works up past the needle. Changes of temperature and pressure are apt to cause considerable irregularity in the working of this lubricator.

Stop Valve Lubricators. Many forms of lubricator are used which have a valve by means of which the rate of supply of the lubricant can be varied. The only objection that can be advanced against them is that the small aperture between the valve and seat is apt to be obstructed by dirt. On this account the valve seating is generally raised above the bottom of the oil reservoir. The objection is not a very serious one, for if the valve becomes choked it is obvious that the lubricant used is not clean. Indeed all oil used should be strained through linen before being fed to the oil-cans.

Oscillation Lubricators. -Lubricators have frequently to be fixed to the moving parts of machines, such as engine connecting-rods, big-ends, locomotives, etc. They are provided with valves which are thrown off their seats by the oscillation of the machinery and allow the lubricant to escape, but seat themselves again when the machinery is stopped.

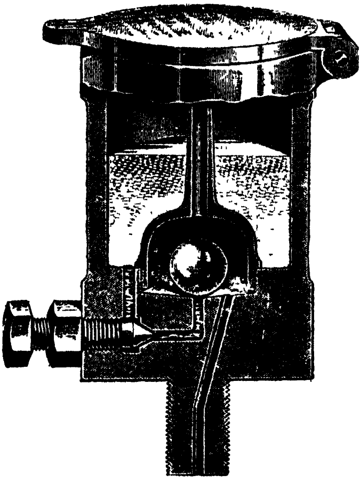
FIG. 157.

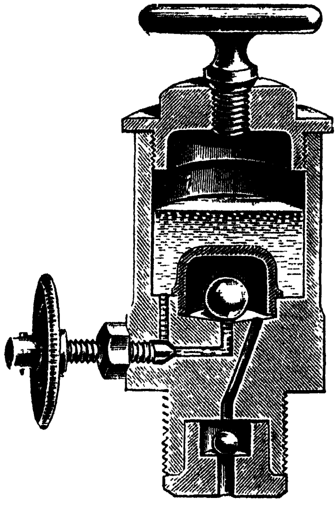
FIG. 158.

Threlfall's automatic lubricator for locomotives, made by Messrs. W. H. Bailey & Co., of Manchester (fig. 157), has an inner chamber containing a brass ball with concave seating. Leading from the oil reservoir to this inner chamber is a passage, terminating in the centre of the ball-valve seating. Another passage leads from the inner chamber, through the shank of the lubricator, to the bearing. The tube leading from the top of the valve chamber to the underside of the lid is for the admission of air, and serves also for flushing the bearing with oil, if required. The cone valve regulates the supply of oil passing from the reservoir to the valve chamber.

When the locomotive is in motion, the ball rolls loosely on its seating, thus admitting oil to the bearings. When the engine comes to rest, the ball remains upon the centre of the concave seat, thus closing the oil-supply pipe.

Fig. 158 shows a cylinder lubricator on the same principle. It has a second ball valve in the shank, the object of which is to prevent steam from entering the lubricator. This valve has an upper and a lower seating, the latter having fine slots cut in it in order to allow the oil to flow past the valve during the exhaust stroke, or when steam is shut off. When the steam is admitted to the cylinder, the valve is forced against the upper seating and closes the passage communicating with the upper ball-valve chamber, thus preventing the steam from entering the lubricator.

Sight-feed Lubricators.—To ensure economical lubrication it is generally necessary to be able to see exactly how much of the lubricant is being supplied by the oil cup to the part requiring lubrication and to be able to vary the supply at will. This can be most readily and easily effected by allowing the oil to fall in visible drops into the orifice leading to the bearing, or to rise as drops through water. The most primitive form of lubricator which indicates the rate of feed, is that in which the lubricant is held in a glass vessel placed in a prominent position, so that the oil level in the lubricator can be seen and its rate of fall noted. Lubricators of this simple form, such as the needle lubricator, have been noticed; but in the case of some of the forms described, neither the rate of supply nor the amount of lubricant in the lubricator can be seen.

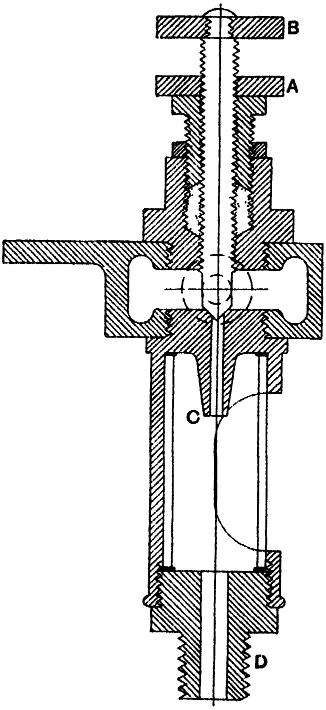

Fig. 159.

We shall now deal with some patterns which actually show the rate of feed, for the oil is visible as drops as it leaves the lubricator under the action of gravity.

A very simple form of *drop-feed* lubricator is made by Rotherham & Sons, Coventry. It is shown in fig. 159. The oil supply is kept in a raised tank, and a pipe leads from it to the contrivance shown in the figure. By releasing the lock nut A, and turning the milled head B, the valve is opened and the oil drips out of the nozzle C, and these drops can be seen through the glass tube. A pipe leads from the union D to the bearing, and any number of these sight feeds can be placed side by side to feed separate bearings. It is thus possible to control the volume of the supply and see that the oil is flowing properly.

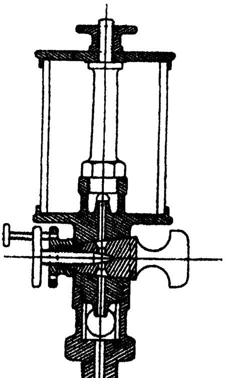

Fig. 160.

The *sight drop-feed lubricator* (fig. 160), made by Messrs Mather & Platt,[1] consists of a small reservoir having a passage leading from the bottom, which can be closed by a tap in which is a small valve which can be regulated as desired. The discharge orifice terminates in a nozzle protected by a short glass tube, which enables the engineman to see the exact rate of feed.

A combined sight drop-feed and siphon lubricator is shown in fig. 161. The lower vessel M, which has a small capacity, is provided with the necessary number of siphon tubes (the one illustrated has three) for containing the cotton or worsted trimmings or wicks T. This vessel has a hinged lid L, which affords a

---

[1] A. Howat, Eng. Patent No. 20205 (1893).

ready means of access for fitting and examining the trimmings; the lid is kept closed by a spring.

The tube U conducts the oil direct to the point of application, or, as in the case of an axle-box, to another oil well of small capacity, from which oil is taken by further trimmings to the part to be lubricated. The drop lubricator, which delivers its oil into M through the sight glass G, consists of an oil vessel A fitted with a valve V, which is used to regulate the supply of oil from A to M. In the illustration this valve is shown closed.

To open the valve V, the end of the spindle is raised, and, after turning it through 90°, the knife edge at K is allowed to drop into the groove which is cut in the top of the adjusting screw B to receive it. The flow of oil from A to M is regulated by raising or lowering the nut B until the desired adjustment has been attained ; B can then be secured by tightening the nut C. The spring S is for the purpose of closing the valve when the knife edge is released from the groove in the top of the nut B. The seat of the valve V is higher than the bottom of the lubricator, thus forming a cavity which prevents sediment from being washed on to the valve seat ; the bell H is provided to prevent suspended matters from settling on the valve seat. A number of air holes O are made in the top of the bell.

The valve is provided with a loose pin P, having a ball and socket connection ; the body of the pin fits the small passage between the face of the valve V and the sight tube, the motion of the machinery or locomotive to which the lubricator is fixed causing the pin to vibrate and keep the passage free and the supply of oil uniform. When filling A with oil, the wing nut D is unscrewed until a hole through it coincides with the hole E.

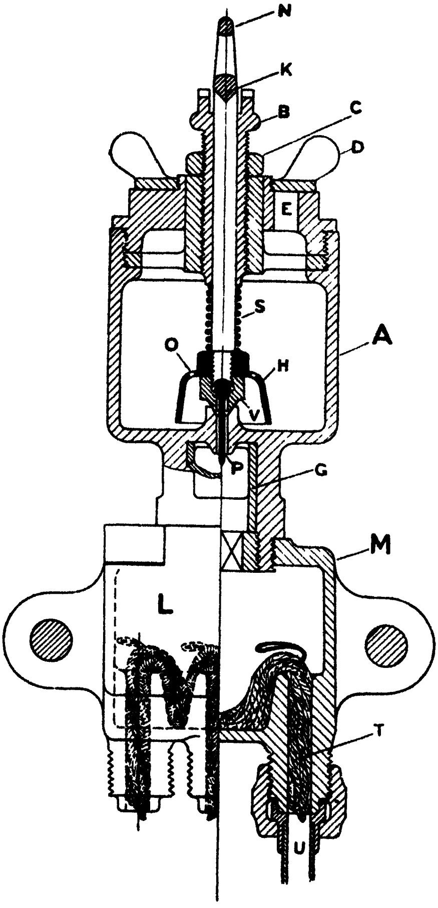

Fig. 161.

With the ordinary siphon lubricator the supply of oil to the bearings continually diminishes as the level of the oil in the reservoir falls, but with this combined lubricator it is kept practically constant, and by varying the number of strands in the trimmings the lubricant can be distributed to the various bearing surfaces in any proportion desired.

The two designs of oil cup illustrated in figs. 162 and 163 are of a pattern very generally used. Regulation of the feed is obtained by turning the fluted cap A to the right or left, according to whether decreased or increased flow is required, the cap being held in position by the spring pressing against it and engaging the grooves. In fig. 162 there is no sight-feed device. Fig. 163 shows a form in which the oil can be seen falling from a nozzle as it passes to the bearing; it is also fitted with a snap lever B at the top, which enables the valve to be closed without altering the adjustment for rate of feed.

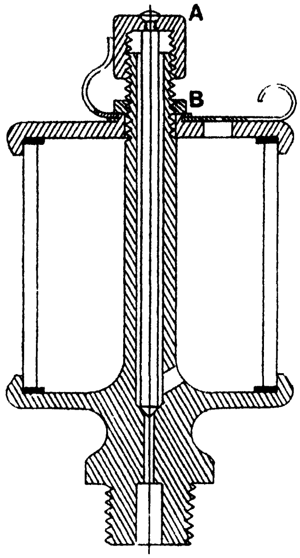

FIG. 162.

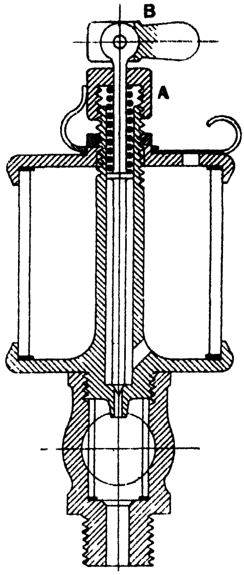

FIG. 163.

Mechanical Lubricators.—Mechanical lubricators, or forced-feed oil pumps, provide a means of supplying lubricant to a bearing with precision, in any desired quantity, and in amounts varying with the velocity of the moving parts. Generally speaking, for ordinary bearings, the lubricant is delivered to the usual oilways provided, the pressure being low in the supply pipes as long as there is no obstruction to the passage of the oil. However, as the oil is delivered by a powerful pump, no ordinary obstruction can impede its flow to the point to be lubricated. In the case of steam-engine cylinders or air compressors, the lubricant is driven forcibly into the cylinders, steam pipes, valve chests, etc., and is not dependent for its flow upon differences of air or steam pressure, or hydrostatic pressure due to the weight of the liquid. Forced feed is now displacing gravity systems of lubrication for all important bearings, especially where bath or pad lubrication is difficult to use, and also for engine bearings of all kinds.

It will be possible to illustrate and describe a few only of the mechanical lubricators in use, there being a very large number of designs; but they all depend upon the same general principles for their efficiency.

Wakefield's Mechanical Lubricators.—Wakefield's[1] lubricators are made of several patterns to meet the varied needs of engine practice. They are designed to lubricate either steam or air cylinders, as well as bearings.

Fig. 164 illustrates a sight-feed mechanical lubricator which has been designed for fitting in the cabs of locomotives. Its special features are the provision of a by-pass to direct the flow of oil should a sight-feed glass break, and a separate flushing for each feed.

A reciprocating motion is given to the pump plunger by means of the eccentric shaft K rotating in bearings fitted in the side of the oil reservoir A.

---

[1] Messrs. C. C. Wakefield & Co., Ltd.

When the pump plunger is at the outer end of its stroke, oil is drawn in through the port E, and through the hollow plunger into the pump barrel D. On the return stroke, immediately the port E is covered by entering the pump barrel, the oil is under pressure and is forced through the sight-feed glass and through the passages leading from it to the outlet J.

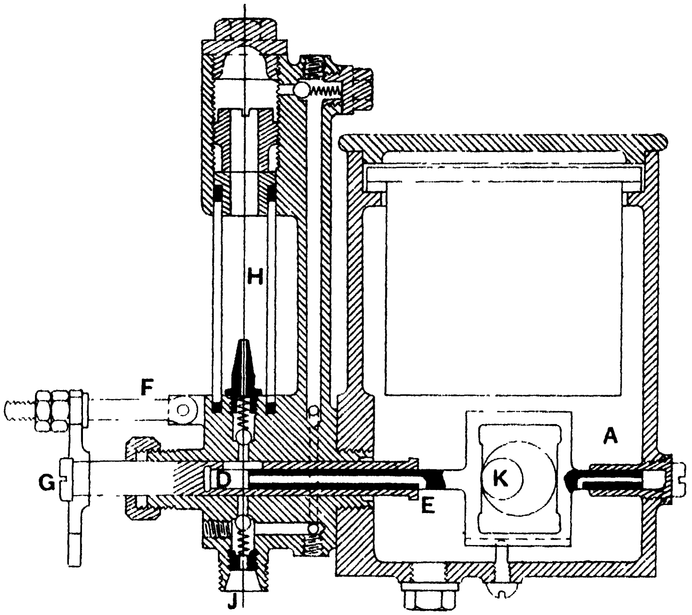

Fig. 164.

Should one of the sight-feed glasses break, the pump barrel D is freed by disengaging the spindle F to which the oil regulator nuts are attached, giving G a half turn, and finally securing G by drawing down F again. By this means the oil supply passes to J without passing through the sight-feed glass H, which is full of water. A new sight glass can then be put in at the end of the journey. At any moment each of the feeds can be individually flushed with oil by freeing F and working the pump barrel backwards and forwards by means of the lever G. It should be stated that as many as eight separate feeds can be supplied with each oil reservoir, and that the ratchet and pawl by which it is driven from the engine are encased in an oil-tight reservoir.

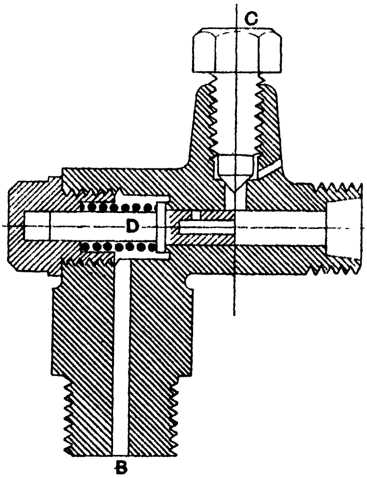

Fig. 165.

From J the oil passes into and fills a copper pipe, and at a suitable point near the steam pipe the fitting (fig. 165) is placed in a convenient position.

When the lubricator is working, the screw plug C can be opened, for the purpose of ascertaining if the pipe is full of oil. When C is closed the check valve D

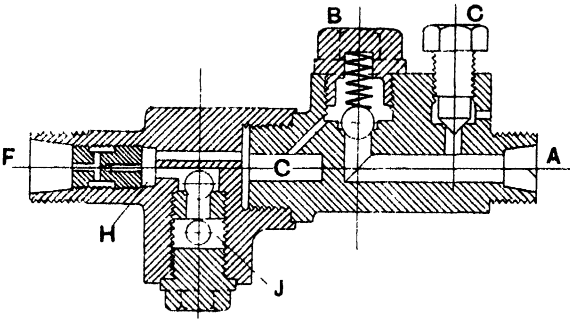

Fig. 166.

is forced off its seat and the oil is delivered through B. The check valve is so designed that dirt cannot keep it open and allow steam to reach the lubricator under any circumstances.

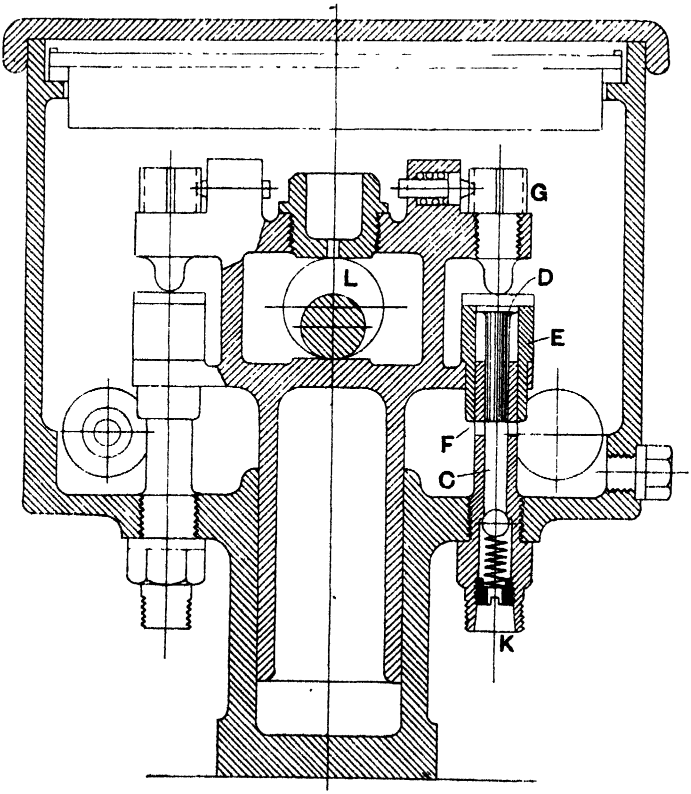

Fig. 167.

Instead of the above-described check valve, Wakefield's "anti-carboniser," illustrated in fig. 166, can be used. It is designed to thoroughly mix the oil with a current of steam direct from the boiler, before the lubricant enters the steam-chest or steam pipe. Oil from the mechanical lubricator enters the anti-carboniser at A, and is forced past the ball check valve B and through the passage C, when it comes in contact with the steam current in the cavity H. The oil and steam from J then pass through the baffle to outlet F, which leads to the steam pipe, cylinder, or steam-chest.

Another form of Wakefield mechanical lubricator is shown in fig. 167. A reciprocating motion is given to the pump plungers by means of the eccentric shaft L. When the pump plunger D and the sleeve valve E are at the outer end of the stroke, oil flows into the space in the pump barrel C through the ports F. As soon as the ports F are covered by the plunger and sleeve valve on the return stroke, the oil in the pump barrel is forced away under pressure to the outlet K. If the oil-regulating plug G is screwed right down, the pumps are working at their full capacity. One full turn outwards of the oil-regulating plug G decreases the oil pumped by one-fifth, and five full turns completely cuts off the oil supply.

This form of lubricator is generally placed on the foot plate of the locomotive, conveniently for the cylinders. One form of this lubricator has the regulator plugs G fitted with pinions gearing into a spur wheel, which can be operated by a steel wire rope from the locomotive cab. This enables the driver to increase the rate of feed when his engine is running slowly and working heavily.

The above-described lubricators are only single acting. There is thus an interval, on the return stroke, when no oil is delivered. To obviate this objection, which may be a valid one in some instances, a double-acting pump is also supplied.

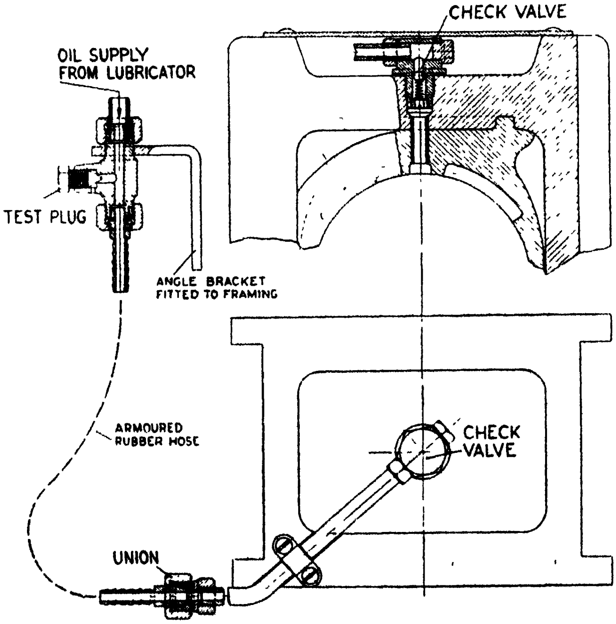

FIG. 168.

The lubricator is made with four feeds on each side.

When one of these mechanical lubricators supplies oil to a bearing the flow is controlled as in fig. 168. A test plug, as shown, is placed in the pipe as near the bearing as possible, to enable the driver to satisfy himself that the pipe is full of oil. On the oil passage to the bearing a check valve is placed to prevent the escape of oil when the engine is standing. In the case of the bearings of the driving and trailing wheels of a locomotive, the oilways are always placed on the top as shown. These journals are thrust backwards and forwards by the action of the piston rods and outside rods, and cause the oil to flow between the brass and journal as the latter is alternately moved from side to side. When such forces do not act on the journal as with the bogie and tender bearings, the crowns of the brasses should not have oil holes in them.

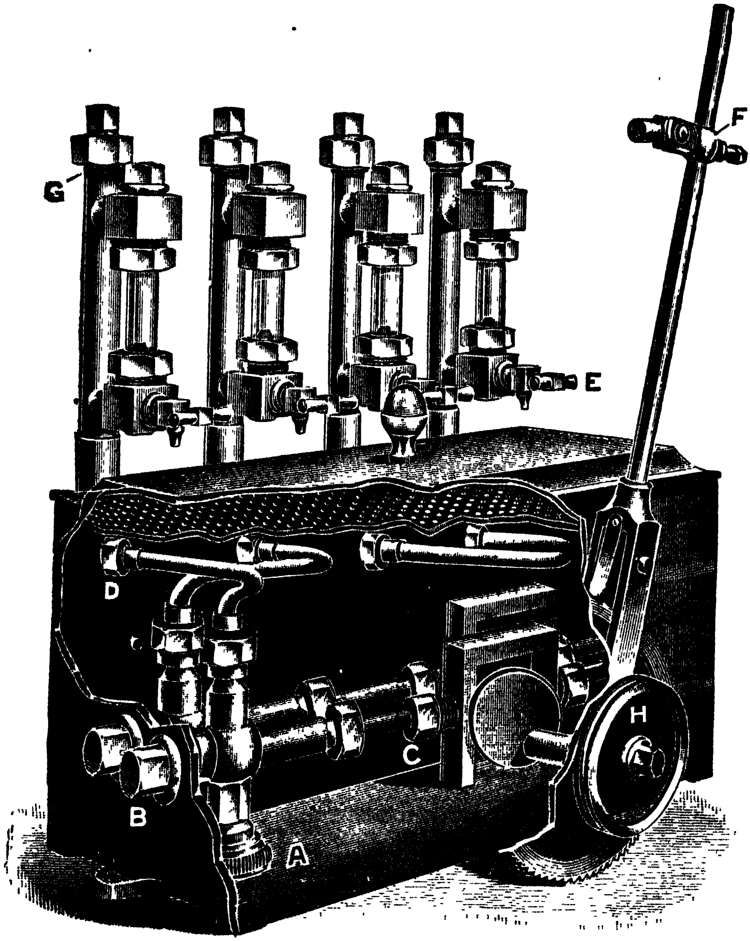

FIG. 169.

Adams & Grandison Mechanical Lubricator.—Still another pump lubricator, made by the Steam Cylinder Lubricator Co. of Manchester, and known as the *Adams & Grandison sight-feed lubricator*, is shown in fig. 169.

This lubricator comprises a tank A containing the oil, in which are several plunger pumps, one for each feed. The supply of oil can be regulated by the taps E, the surplus oil passing back into the tank through the holes seen below each tap. The lever F is usually coupled to some reciprocating part of the engine, but in the case of high-speed engines a special gear is fitted for driving by a small band from some revolving part of the engine. The pumps

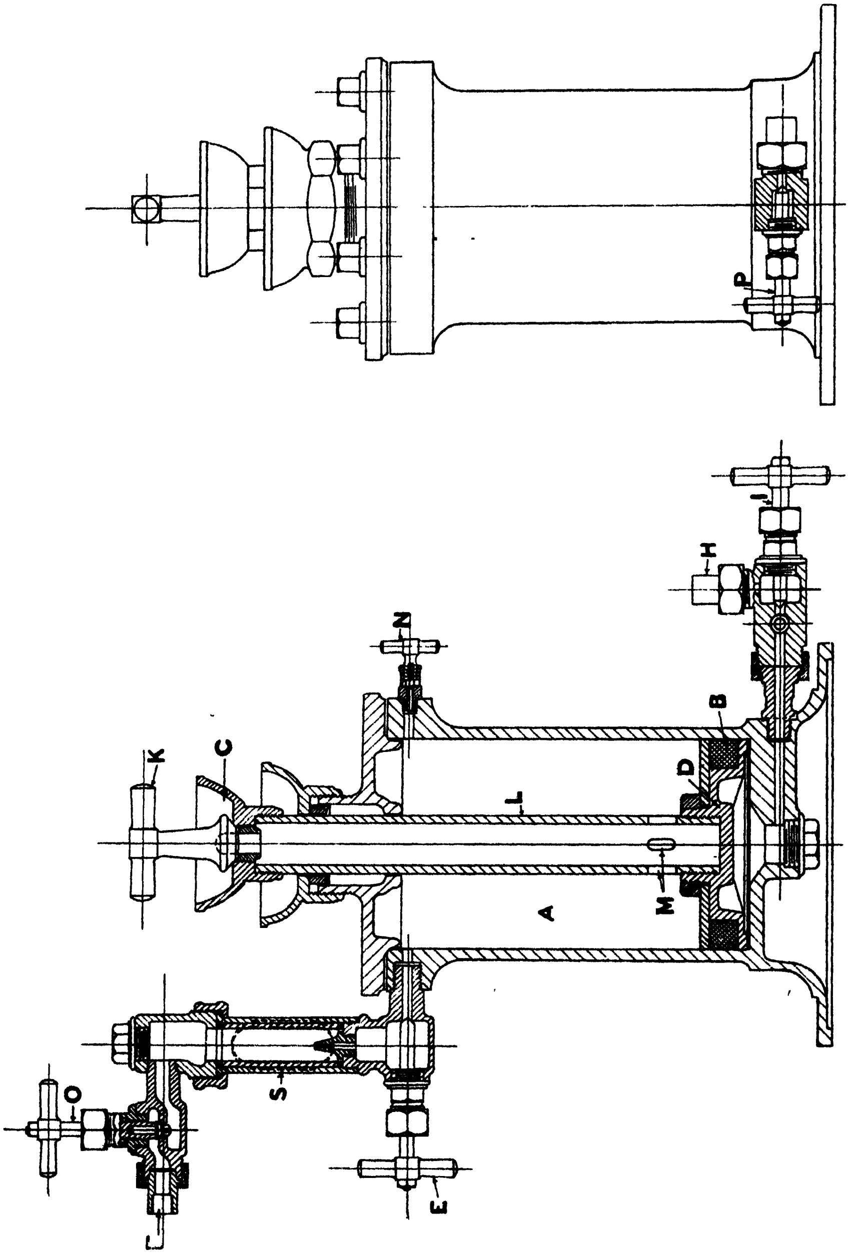

Fig. 170.

can be worked, if required, by the hand-wheel H, for flushing purposes at starting, etc.

Grandison's piston mechanical lubricator, fig. 170, also made by the Steam

Cylinder Lubricator Co., Manchester, is a form of displacement lubricator in which the oil is supplied by the pressure of steam on a piston-rod. It consists of a cylindrical vessel A fitted with a piston D, a hollow piston-rod L, and a sight-feed arrangement S. The steam inlet is at H, and the oil outlet at F. As the steam pressure above and below the piston are equal, the steam pressure on the area of the piston-rod forces the lubricant past the slightly open valve E.

The piston D is packed with an asbestos ring B, held between a junk ring and the piston.

To fill the lubricator, the piston D is pushed down as far as it will go; the plug K is removed, and oil is poured into the cup C, whence it runs down the hollow piston-rod and through the holes M into the lubricator, air being allowed to escape through the plug N. After the plug K has been replaced, steam is admitted below the piston D by opening the plug I.

The amount of oil allowed to pass away is regulated by the plug E, and the number of drops passing per minute can be seen through the glass S, which is kept filled with water, the amount of oil in the lubricator being indicated by the length the piston-rod projects through the stuffing-box on the top of the lubricator.

The water can be drained from the part of the cylinder under the piston D, by closing the plug I and opening the plug P. By closing the plug O, the lubricator is isolated from the part being lubricated.

There are a number of cylinder lubricators, more suitable for large than for small engines, so designed that a piston, actuated by a ratchet driven from the engine cross-head, delivers at each stroke of the engine a definite quantity of oil.

The *Adams Seafield Lubricator*, made by the Steam Cylinder Lubricator Co., Manchester, has an oil pump driven by a rocking lever instead of a pawl and ratchet wheel. One design is shown in section in fig. 171. The rate of feed can be varied over a wide range, and will work against high pressures and superheated steam. It is specially adapted for gas, oil, and steam engines.

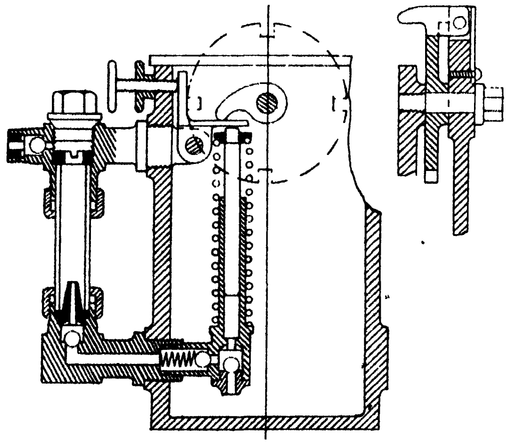

FIG. 171.

The "*Serpollet*" *sight-feed mechanical lubricator*, made by Messrs. Schäffer & Budenberg of Manchester, shown in section in fig. 172, has a piston actuated by a ratchet and lever to which a to-and-fro motion is communicated by means of a double cam. The piston is provided with two slots, a longitudinal slot by which the oil is delivered successively to the different outlets (only one shown in the figure), and an oblique slot by which the oil is drawn into the hollow piston from the oil reservoir during the suction period. In addition to the working piston there is a second shorter one held down by a spring, which serves to relieve any excess pressure. The tension of the spring can be varied, by turning the spindle projecting through the stuffing-box to suit different feed pressures. The oil from each outlet rises through a sight glass, of which from two to eight are connected to one lubricator, and supply oil to as many bearings.

Another lubricator of this type, also made by Messrs. Schäffer & Budenberg, is *Franke's mechanical lubricator*, shown in fig. 173. The ratchet wheel S is rotated in the usual way by connecting the lever H with any suitable part of the engine. The cylinder C, containing a plunger K, is rotated by the ratchet-wheel spindle. During each revolution of the cylinder, the two ends of the plunger alternately come in contact with the projecting end of the pin *a*, and thus the plunger is moved to and fro, producing a pumping action by which the oil is alternately drawn into the cylinder and forced forward to the delivery. For this purpose the cylinder C is provided with a passage *b* which alternately communicates with the oil reservoir through the suction passage *s*, and with

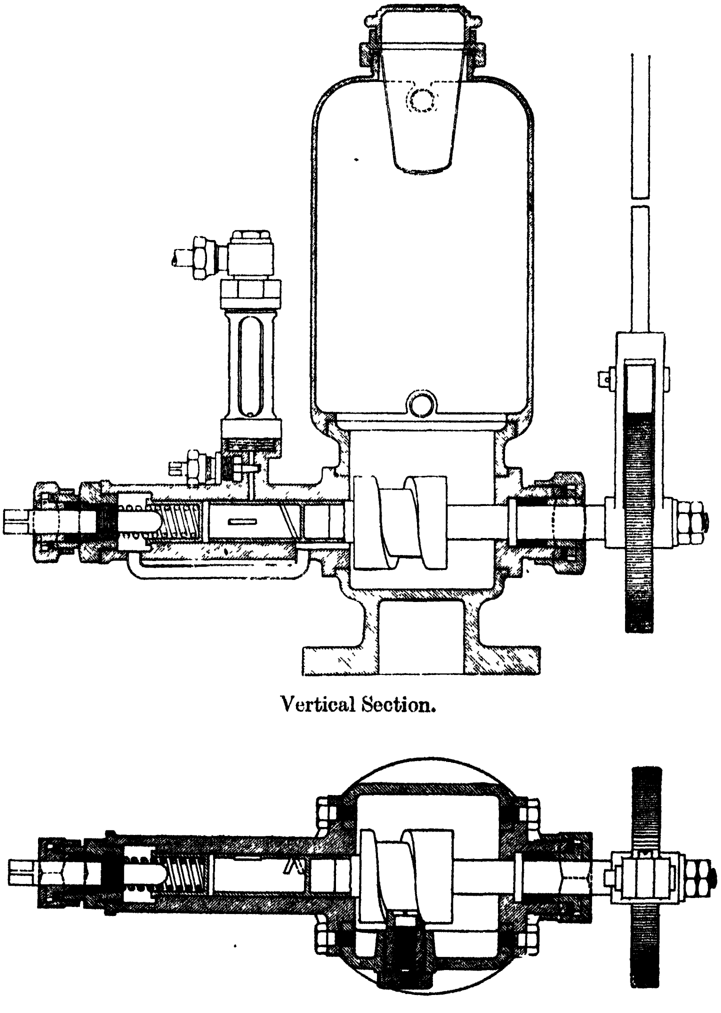

Vertical Section.

Horizontal Section.

Fig. 172.

the delivery pipe D through the passage *d*. By turning the nut O the pin *a* can be adjusted to vary the stroke of the plunger K, so as to give the required feed of oil.

Fig. 174 is a mechanical plunger lubricator made by Messrs. Schäffer & Budenberg, Manchester. It consists of a lower vessel to contain oil, fitted with a hollow plunger which is actuated by an arrangement of ratchet, worm, and screw gearing.

The worm gearing is connected to the plunger by a friction coupling which is loosened by turning the wing nut at the top. After loosening the nut the plunger can be screwed up or down by means of the large handle, for giving a flush of oil or for filling the cylinder from the oil cup. The oil-filling cup is fitted with a three-way cock. When filling, the handle is in the vertical position, and it must be turned to the horizontal position for working.

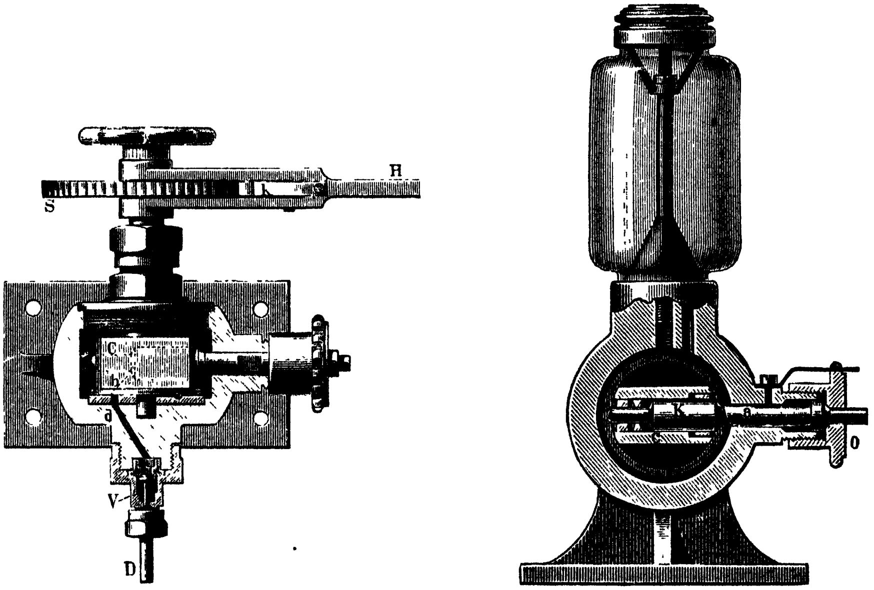

Horizontal Section. Vertical Section.

FIG. 173.

In case the plunger meets with any undue resistance the friction coupling will slip, thereby preventing any damage.

The back-pressure valve supplied with the lubricator is intended for the delivery end of the oil-supply pipe.

A sight feed can be supplied if desired. This is attached directly to the oil delivery on the cock.

The K. & W. Graphiter.—This lubricator, shown in figs. 175 and 176, is designed to deliver to the engine a mixture of flake lubricating graphite mixed with oil or other liquid. Motion is given to the central vertical spindle by a pawl and ratchet wheel driven from the engine. On the ratchet-wheel spindle is a worm which engages a worm wheel on the central vertical spindle. In the centre of this vertical spindle is a pump plunger actuated by a ring, the inclination of which can be adjusted from the outside so as to vary the stroke of the plunger and vary the rate of delivery of the lubricant. A spiral

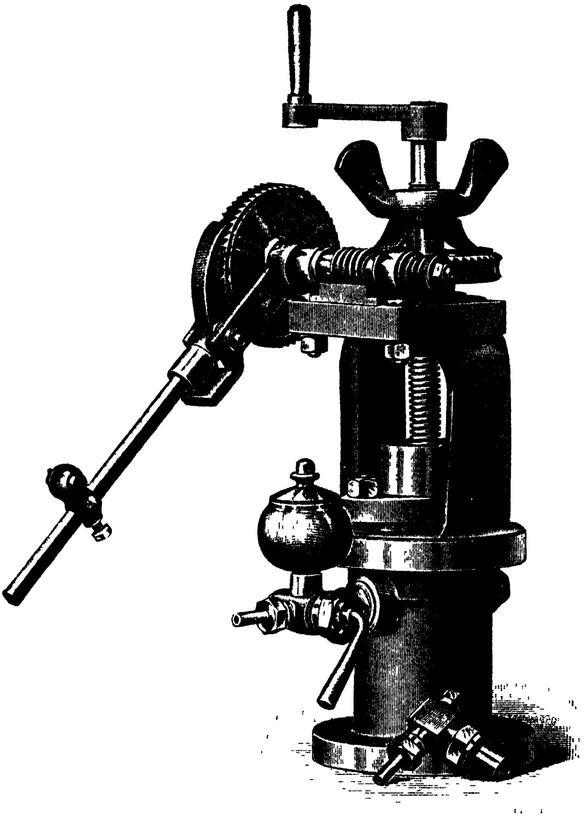

FIG. 174.

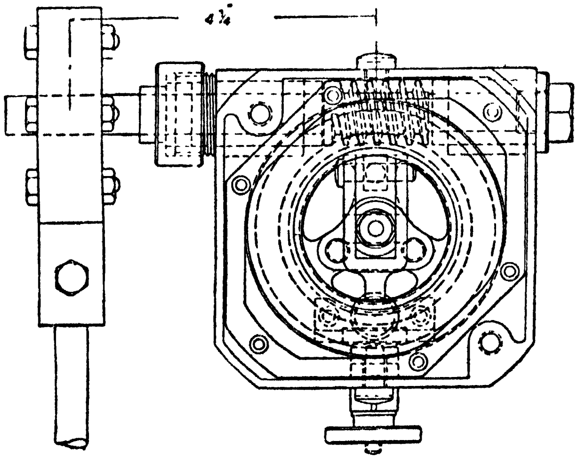

FIG. 175.

wire revolves inside the connecting pipe between the lubricator and the delivery valve, which prevents any possibility of the graphite settling in or obstructing the connecting pipe. Delivery and relief valves, of the design shown in fig. 177, are also provided.

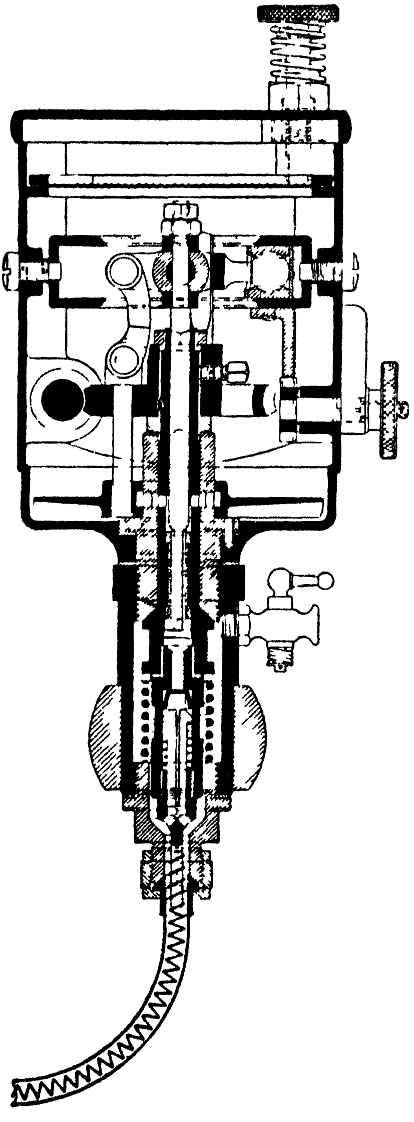

Fig. 176

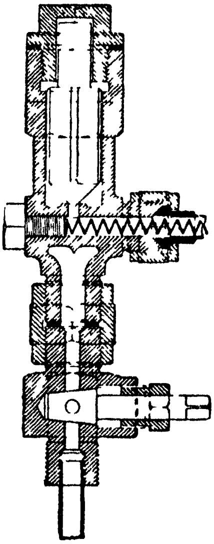

Delivery Valve

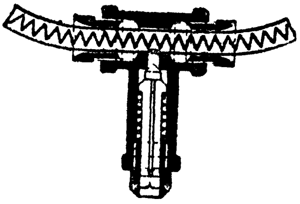

Relief Valve

Fig. 177

Hydrostatic Sight-feed Lubricators.—In the case of many stationary steam engines, especially those whose load is fairly constant, gravity or hydrostatic sight-feed lubricators have proved themselves to be excellent for valve chests and cylinders. There are a great variety of designs, but all of them act as a result of the head of water between the steam inlet and orifice through which

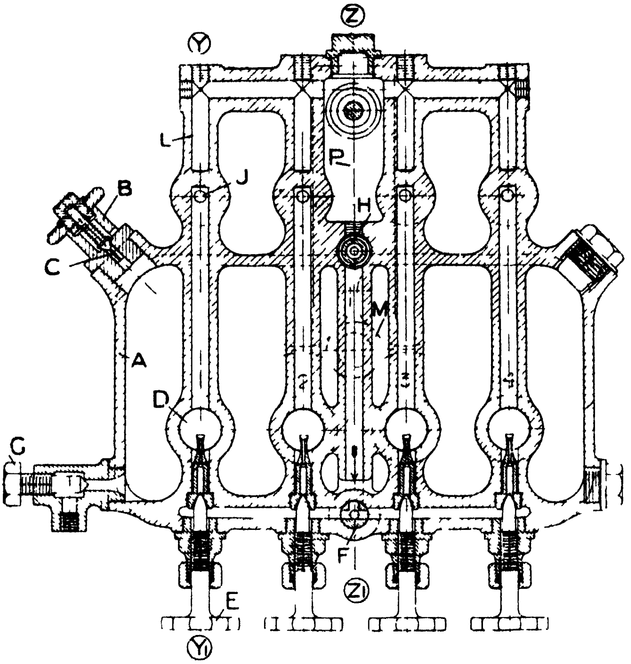

Fig. 178

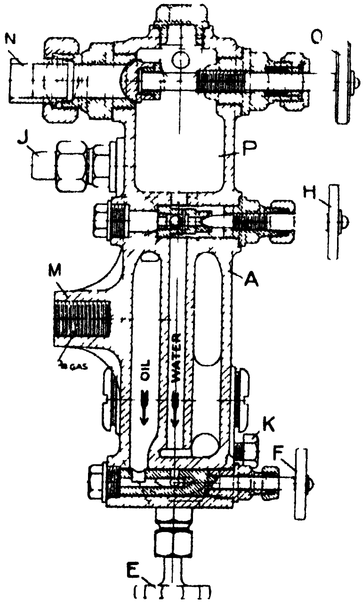

Fig. 179.

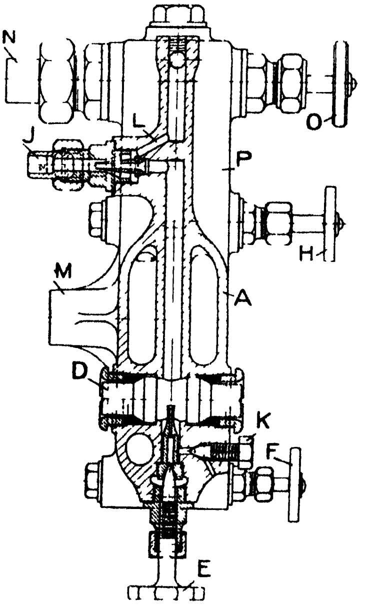

Fig. 180.

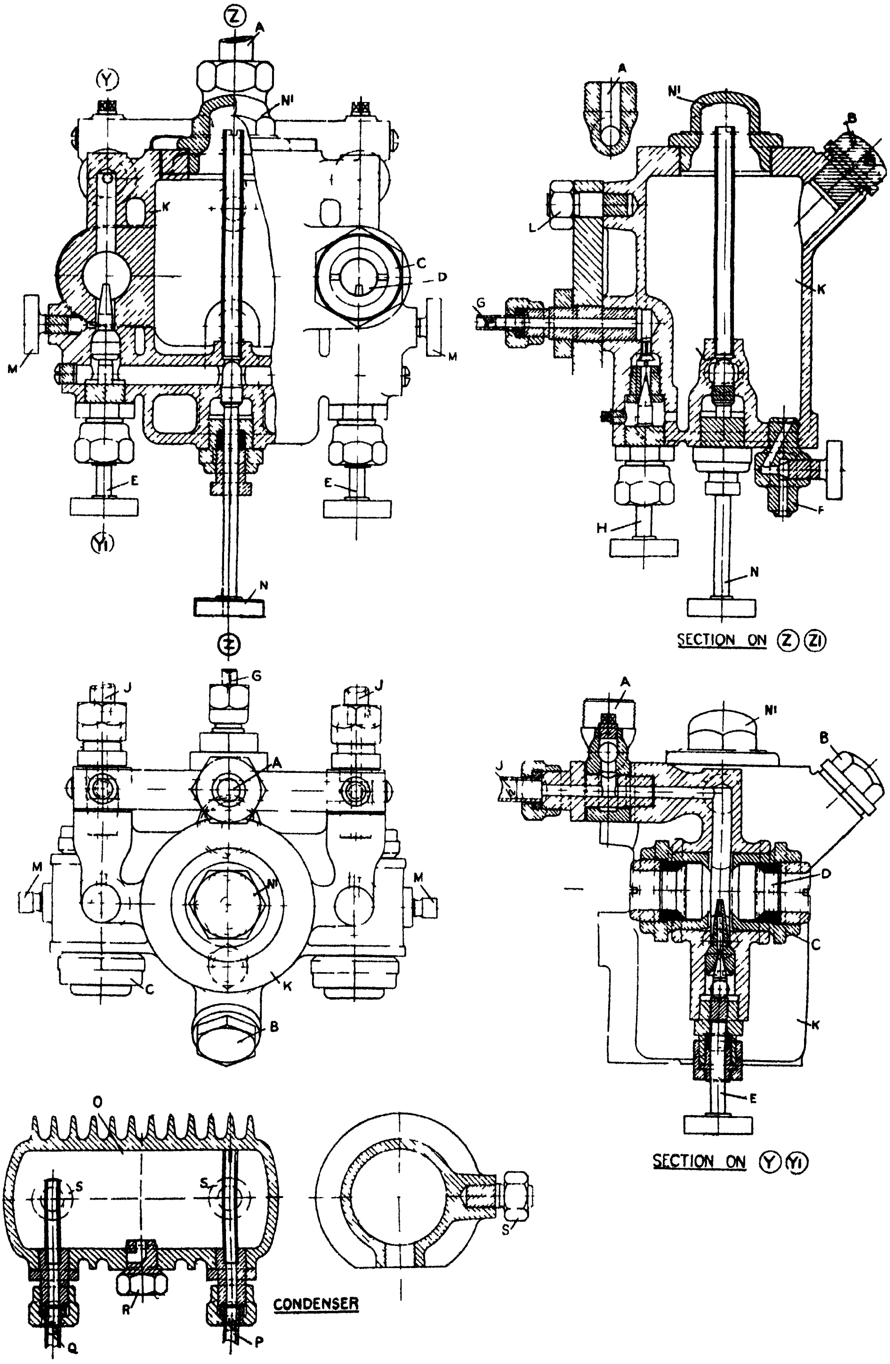
Z
A
Y
N¹
K
C
D
M
M
E
E
Y1
N
Z
A
N¹
B
L
K
G
H
N
F
SECTION ON Z Z1
G
J
J
A
M
M
N¹
C
K
B
A
N¹
B
J
D
C
K
E
SECTION ON Y Y1
O
S
S
S
R
Q
P
CONDENSER

FIG. 181.

the water, steam, and oil pass to the engine. In its passage through the lubricator the oil rises through a small reservoir of clean condensed water, and the drops can be seen by the engineman as they rise. Suitably placed valves enable the rate of flow of the oil to be varied at will; the more quickly the drops follow each other the more rapid the supply of the lubricant. In many cases, just before the oil leaves the lubricator, it is mingled with a small stream of steam passing from the boiler to the cylinders, steam chest, or steam pipe, thus ensuring the proper distribution of the oil over the rubbing surfaces. The delivery pipe should be carried well into the steam pipe of the engine, or other passage, so as to prevent any of the lubricant from running down the surfaces instead of mixing with the steam.

Wakefield's Eureka Lubricator.—This lubricator is shown in figs. 178, 179, 180 (p. 479). There is a practically constant head of water (condensed steam) in the chamber P, which forces the oil through the nipples visible through the sight-feed glasses D; the supply of oil being controlled by the oil-regulating valves E. A is the oil reservoir. Steam from the boiler enters the lubricator through the pipe N, and passes down the passages L to the outlet J, where it meets the oil which rises through the water in the sight-feed chamber, and carries it as a spray to the steam pipe or cylinders. B is the filling plug. It is fitted with a release valve to prevent damage due to the development of excessive pressure resulting from oil expansion when all outlets and inlets are closed. The lubricator illustrated is of the four-feed type, and all four feeds can be shut off, without altering the regulating valves E, by operating the valve F, and the sight-feed glasses can be blown through by opening the plugs K.

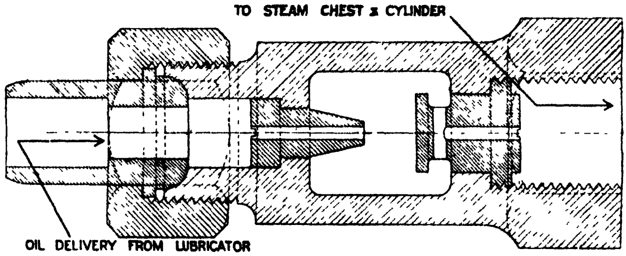

FIG. 182.

Wakefield's A.C. Lubricator.—The Wakefield A.C. lubricator (fig. 181) differs from the Eureka, inasmuch as the hydrostatic head is measured by feet instead of inches. The steam from the boiler enters the condenser by the pipe P and the water flows out to the lubricator at Q, the condenser being fixed outside the driver's cab as high up as possible. The lubricator itself is fixed in a conspicuous position inside the cab. Water from the condenser enters the bottom of the oil reservoir K through the pipe G and condenser valve H. When the valve N is opened, oil flows down the central tube to the two valves E E, and, when these are open, rises in drops from the sight-feed nipples towards the outlet J. Here the oil meets a current of steam from the boiler entering at A and is driven to the engine.

Steam chest and cylinder connections are provided of the design shown in fig. 182. In passing with the steam through the small holes in this fitting the oil is broken up into a fine spray, and reaches all parts bathed by the steam.

Simplex Lubricator.—The Simplex lubricator, made by the Steam Cylinder

Lubricator Co., is illustrated in fig. 183. In this lubricator the sight-feed glass G is always full of steam, and when the valve C is opened the oil can be seen *dropping down*. After filling with oil, to start the lubricator, open the valve A slowly about one turn. This admits steam to the upper part of the lubricator E and the sight-feed glass G. Water of condensation settles down to the bottom of the lubricator and raises the oil level so that it can flow through F when the valve C is open.

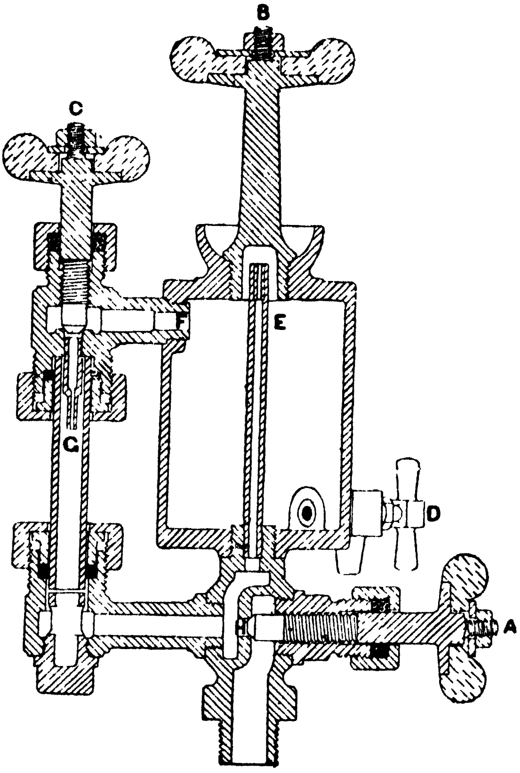

FIG. 183.

Fig. 184 shows a condenser type of sight-feed lubricator made by the above firm. Water resulting from steam condensation collects in A and flows into the oil reservoir chamber B, forcing the lubricant through the regulating valve below the sight-feed glass. Oil rising through the water in the glass passes through the lightly loaded valve to the steam pipe. When the valves D and E are closed, F can be opened and the lubricator filled with oil. Another valve, not shown in the figure, can be opened to run off water.

Grease Cups.—Although grease cups for cylinders are not used so frequently as formerly, owing to lubricants containing vegetable or animal oils and fats in the form of greases being unsuitable for steam cylinders, such cups are used for introducing a charge of lubricating oil into a steam space against the steam pressure.

Fig. 185 shows one of the many forms of grease cup. By opening the upper tap, whilst the lower tap is closed, the central receiver may be filled with oil. On shutting the upper tap, and more or less opening the lower one, the lubricant is allowed to flow into the steam space below, whilst the steam flows and condenses in the receiver.

Roscoe Water-displacement Lubricator.—It has been found more convenient and economical to use in place of the above-described instrument an automatic contrivance which will feed the lubricant slowly. One of the earliest and most satisfactory instruments of this class is the Roscoe[1] lubricator, shown in fig. 186. The delivery pipe, which passes some distance into the steam pipe, must be of such diameter that both the oil from the lubricator and the water resulting from condensation can flow away freely along the lower part of the pipe, and allow live steam to enter along the upper part.

---

[1] James Roscoe, Leicester, Eng. Patent No. 1337 (1862).

The Roscoe lubricator consists of a chamber which can be filled with oil from above. Near the top of this chamber is the delivery passage, which can be opened or closed to any desired extent by means of a valve. There is also in the centre a vertical tube, the upper end of which is closed, and the lower end perforated to admit water or oil. Upon the vessel being filled with oil, the tube remains full of air until the delivery valve is opened, when, the steam entering the lubricator, the air is compressed. The steam then rapidly condenses, and the water falls to the bottom. So long as the engine is running, the delivery valve is left slightly open, with the result that steam or water slowly enters the lubricator, and the oil slowly finds its way out. Should steam be shut off, the pressure in the lubricator is relieved, the air expands in the central tube, and a quantity of oil is driven out which serves to keep the parts lubricated until steam is again turned on. The amount of opening which must be given by the driver to the delivery valve when the lubricator is fixed on a locomotive, depends upon the number of stops which have to be made by the train, the temperature of the air, and the extent to

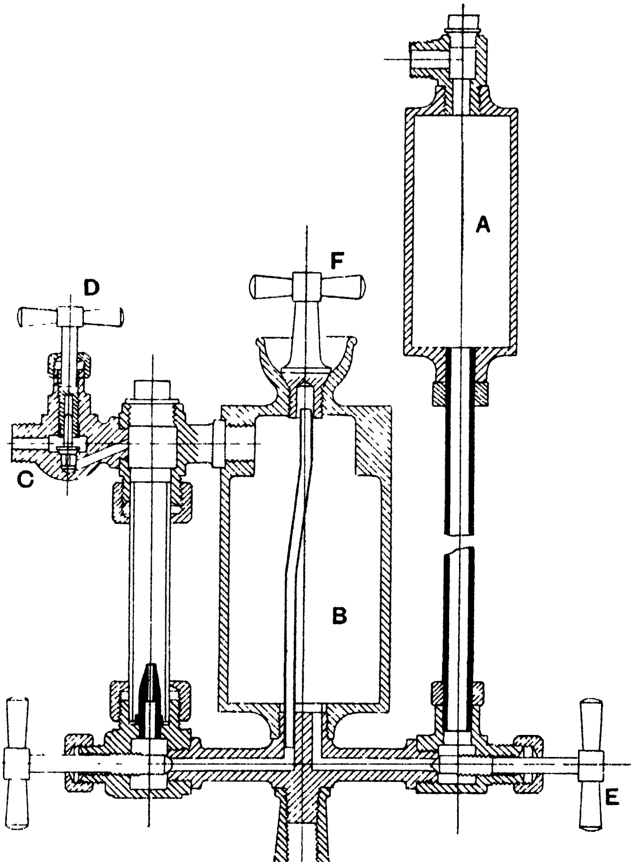

Fig. 184.

which the steam is throttled by the engine regulator. An experienced driver can judge these points very satisfactorily and obtain good results without waste of oil.

In the case of locomotives, the steam has often to be shut off and the engine allowed to run for long distances without steam. When working in this condition, there is often too little steam passing through the lubricator to more than partially lubricate the engine parts. To prevent any serious injury to the rubbing surfaces under such conditions, lubricators are placed on the cylinders. The most commonly used design is known as the *Furness*[1] *lubricator*, a section of which is shown in fig. 187. Oil is placed in the bell-shaped chamber, from whence it feeds through the wick and wire-gauze cup into the central passage, which it fills. So long as there is steam pressure in the cylinders the small valve shown remains closed, but immediately steam is shut off, a vacuum is formed, the valve is drawn off its seat, a charge of oil enters the cylinder, and, so long as the steam remains off, the oil is slowly fed.

A weak feature of this lubricator is that, depending as it does upon the lifting power of wicks, it cannot be used for thick cylinder oils, unless it be steam-jacketed so as to keep the oil warm.

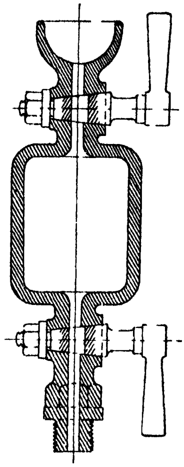
Fig. 185.

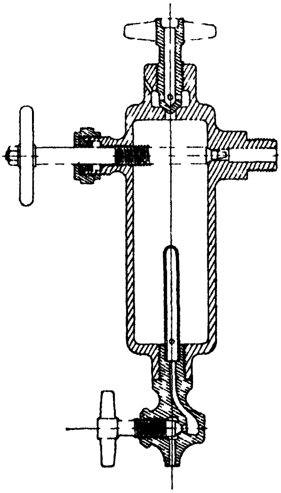
Fig. 186.

An *improved cylinder lubricator* of this type is shown in fig. 188. The lubricator is filled with oil through the cap W, after removing the cork L, and no oil can pass away from the container so long as the valve A is kept pressed against its seating by the spring B, as shown in the figure.

To operate the lubricator, the valve A is lifted and rotated through 90°, so that the knife edge K at the top of the valve spindle rests in the cross grooves made in the nut C to receive it. The amount of opening of the valve is regulated by raising or lowering the nut C until the required quantity of oil can pass slowly into the chamber E, and, when the desired opening has been obtained, C is locked by means of the nut D.

The glass chamber E enables the rate of feed to be observed and regulated. The needle N, held loosely in the valve A, maintains a clear oilway and regular feed.

When the engine is working under steam, the valve F is kept pressed against its seating, and steam is thus prevented from passing from the cylinder into the lubricator. During this time oil passes slowly from the containing vessel through the valve A into the chamber E, and when steam is shut off, the action of the engine piston moving to and fro creates a vacuum behind the valve F, which rises, and oil out of E is forced into the cylinder by the pressure of the atmosphere passing down through the tube H.

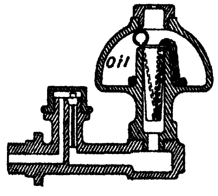

Fig. 187.

---

[1] H. D. Furness, Eng. Patent No. 2437 (1871).

The Luard automatic lubricator, fig. 189, made by Messrs. Holden & Brooke of Manchester, also dispenses with the trimming.

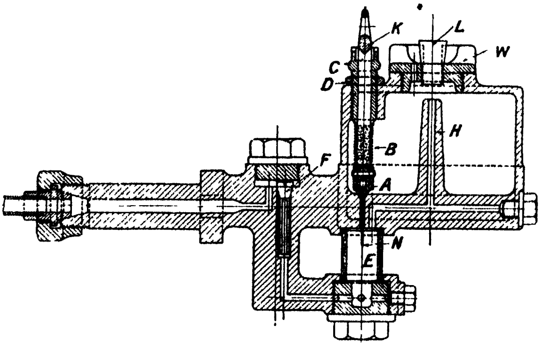

FIG. 188.

At each stroke (when steam is shut off) the vacuum in the cylinder causes the valve A to close and the valve A′ to open, a small fixed quantity of oil being drawn up past the three-sided spindle B at the same time. The screw C is provided in case the use of a different quality of oil renders regulation desirable. The screw is protected by the cap D, and cannot be tampered with unless D is unscrewed.

To secure lubrication whilst the steam is shut off, the stream of oil and steam coming from the sight-feed lubricator is, in Smith's design, reinforced by a jet of steam, which, by an air valve, is caused to flow direct from the boiler and open the steam valve when there is a vacuum in the steam-chest.

Smith's automatic vacuum-destroying valve lubricator for locomotives (fig. 190) is used in connection with locomotive steam-chests and cylinders, for destroying the vacuum created by the pumping action of the pistons when the engine is running with steam shut off, and for lubricating the working faces of the valves and pistons by means of a combined jet of steam, air, and oil.

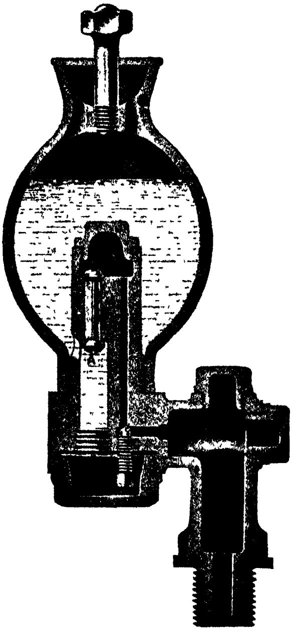

FIG. 189.

The opening A communicates with the cylinder steam-chests, and the pipe B with the steam dome of the boiler. When closed, the valve C prevents the passage of steam from the boiler, through the pipe B, into the chamber E. The valve D is exposed on its upper side to the pressure of the steam in the steam-chests and the chamber E, and on its underside to the pressure of the atmosphere. The positions of the valves C and D as illustrated are those which obtain: (*a*) when the engine is running with the steam regulator open, and (*b*) when the engine is at rest with the steam regulator closed. When the engine is moving with steam shut off, the action of the engine pistons creates a partial vacuum in the steam-chests and in the chamber E, and the greater pressure of the atmosphere on the underside of the valve D causes it to rise and come in contact with the end of the valve C, which is lifted and allows steam to pass through the nozzle G into the chamber E, thence into the steam-chests and cylinders; at the same time air is allowed to pass up the passage F F, past the seating of the valve D, and to mix with the steam.

The vessel H contains a supply of oil, and the valve K regulates the amount which passes from H into the chamber L, the non-return valve N preventing the passage of steam from the steam-chest into L and H. When the engine is running with steam shut off and a partial vacuum is thus produced on the top of the valve N, the air at atmospheric pressure, which is free to enter H, lifts

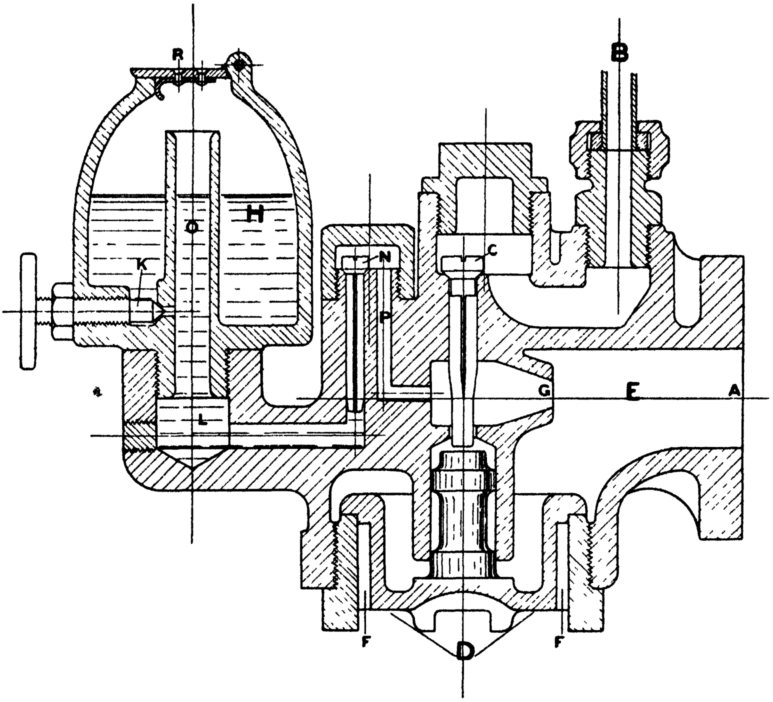

FIG. 190.

the valve N, and the oil out of L is forced down the passage P and is carried forward to the cylinders by the steam passing through the nozzle G.

When the engine comes to rest and the pressure in the chamber E becomes equal to that of the atmosphere, the valves D, C, and N automatically close.

The tube O is made of a large bore, so that, in the event of the valve N temporarily sticking, steam will be allowed to escape freely by raising the lid R, and without blowing the oil out of H.

Design of Cylinders.—To secure good cylinder and valve lubrication, it is essential that attention be paid to the conditions which determine whether the oil shall reach the surfaces or not. The greatest enemy to good cylinder lubrication is water. It wets the surfaces where there is any abrasive action, and effectually keeps off the oil. Water may be present in undue quantity, either because it is brought into the steam-chest and cylinder from the steam pipe. or is unable to escape from the cylinders owing to the positions in which the steam ports are placed. When water comes from the steam pipe in any quantity, a separator should be used and the steam dried. This is nearly always done in the case of high-speed engines. To ensure the escape of such water as condenses in the cylinders, the ports should be placed below them, or so low at the side or sides that all the water may drain away with each opening of the exhaust port. Proper drain pipes must also be fixed to the lowest points of the exhaust pipe when it rises to any height, or the water will remain in the pipe to a sufficient extent to keep the cylinders in a wet condition and so prevent proper lubrication. To get rid of such water as is condensed in the cylinders and cannot get away freely through the main valves, Holt's drain valve has been found very efficient. A section of this valve is shown in fig. 191. Here the two valves, which slide freely on a spindle, so control the movements of each other, that the one having the greatest steam pressure upon it remains shut and holds the other open. This results in the closing of the drain valve at that end of the cylinder receiving steam, whilst the valve controlling the drain pipes at the end of the cylinder which is being exhausted remains open. Provided that the drain valve is not too large for the cylinders, the water is drained with very little loss of steam, and the bottom of the cylinder, which in horizontal engines has to carry the weight of the piston, remains well lubricated.

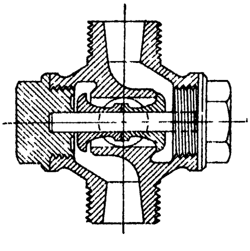

FIG. 191.

Pump Circulation.—Instead of placing a reservoir beneath or above each bearing, and allowing the latter automatically to lubricate itself, the plan is often adopted of supplying the bearings of engines, dynamos, etc., in an engine-house, from one or more raised tanks into which the oil is pumped from a common well, to which the lubricant gravitates as it runs off the brasses. By this means the oil is used over and over again, and can be strained, clarified, and replaced as desired. This method involves the use of a rather intricate set of supply and return pipes, and the bearings must be designed so that the waste oil may be collected without loss as it runs off the steps, slides, etc.

In *Parsons' system* the oil is supplied to the bearings under a slight pressure, varying in different instances from a few inches to several feet, but which is in all cases just enough to allow the oil to flow freely through the bearings, from which it carries off the heat generated by friction; it is then cooled by a tubular cooler before being returned to them. As the oil is nowhere exposed to the outer air, but circulates only in a closed system, it collects no dirt and does not require filtration, but circulates over and over again continuously, the entire supply passing through the journals every few minutes. As instances of the astonishing economy of oil thus realised, A. M. Mattice, in a paper read before the American Society of Mechanical Engineers,[1] cited two 400-kilowatt steam turbines of the Parsons type running at 3600 revolutions per minute, one of which used only 50 gallons of oil in six months, and the other one 55 gallons; whilst at another plant, consisting of two units rated at 750 and 400 kilowatts respectively, only three barrels of oil were used in sixteen months. The turbine steamer *Virginian*, according to Mattice, made four successive round trips between Liverpool and Montreal without any addition of oil to her tanks, and the supply was still not appreciably diminished from its initial figure of 115 imperial gallons. In this case the whole supply passed through the bearings every four minutes. The figures quoted are, of course, those for the turbine bearings only, since the line shafting had ordinary lubrication.

In the "*Bellis*" *system of forced lubrication*, the oil is pumped into the bearings under considerable pressure. The illustration (fig. 192) shows a Bellis & Morcom engine lubricated in this manner. A pump A, placed in the crank pit, supplies

---

[1] *Trans. Amer. Soc. Mech. Eng.*, xxvii. 469; also *Engineering*, 11th May 1906, p. 621.

oil under pressure to the main bearings, crank-pin bearing, cross-head gudgeon pin, guide shoe faces, and eccentric sheave. Two sections of the oscillating pump are shown. The plunger, closely fitting the pump barrel, is actuated by being attached to the engine eccentric strap. The pump barrel is mounted on trunnions, and the oscillating motion imparted to it by the eccentric brings the port in the circular face at the bottom of the barrel alternately opposite to the suction and discharge ports in the fixed portion of the pump. The pump

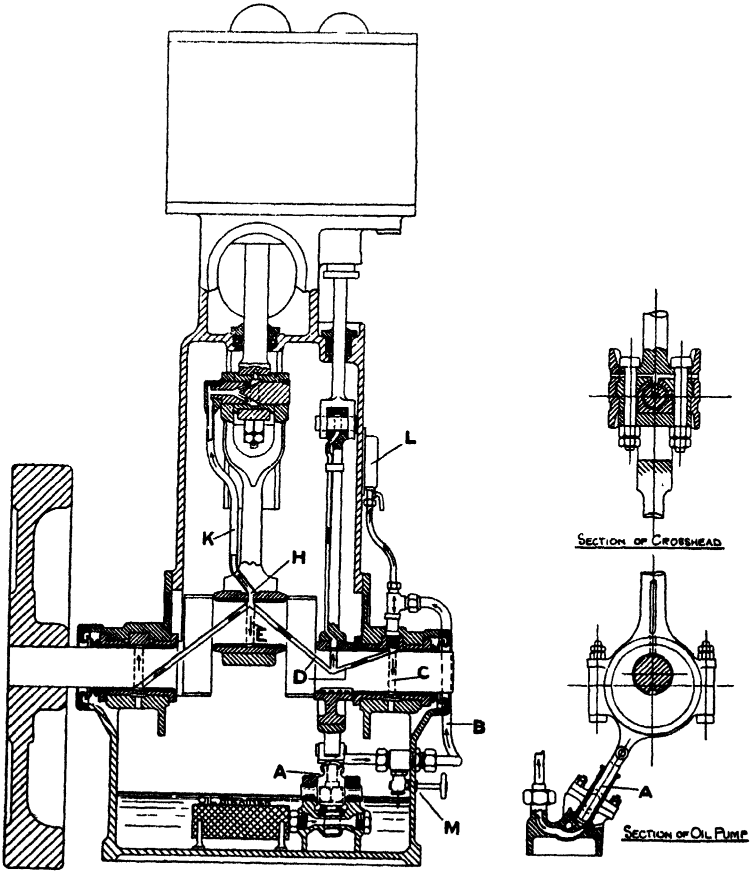

Fig. 192.

is kept continually immersed in oil, and takes its supply of oil from the crank pit through a cylindrical strainer, round which is wrapped fine gauze wire to prevent grit and dirt from getting into the bearings. The delivery branch of the pump is connected to a main supply pipe B, from which branch pipes are led to nipples screwed through the cap into the brass of the main bearings. The method of conveying the oil from the main bearings, and the direction of flow, are clearly shown in the illustration.

A circumferential groove C is turned in the brass, from which a radial passage D, drilled in the shaft, conducts the oil to a similar circumferential groove E in the crank-pin bearing; from the groove in the crank-pin bearing the oil is conducted by a passage H and pipe K to the interior of the cross-head pin, and thence by a similar arrangement of circumferential groove to the guide shoe.

The lubrication of the eccentric rod and valve rod pin is dealt with on similar lines. From the main oil-pipe, a pipe is led to a pressure gauge L reading up to 50 lbs. per sq. inch, which shows at a glance whether the oil pressure is being maintained—the usual pressure being from 10 to 20 lbs. per sq. inch. If the pressure in the lubricating system of pipes be too great, an oil-relief valve M, fixed on the main supply pipe, is slightly opened, and permits a small quantity of oil, which has passed through the pump, to be returned to the reservoir.

Splash Lubrication.—To secure the advantages of good lubrication as well as to keep out grit and dirt, many kinds of mechanism are completely enclosed in cases containing the lubricant, which is thrown about by the moving parts, drenching all the exposed rubbing surfaces, and freely entering the oilways provided. In this way, not only is the oil used over and over again, but perfect lubrication is secured, and, as previously pointed out, particles of grit and dirt are prevented from mixing with the oil and grinding away the rubbing surfaces.

Very many engines have the whole of the moving parts enclosed in this way, and perfect lubrication is secured for all parts. The bed-plate forms a reservoir in which is placed oil and water. At each revolution of the crank the lubricant is thrown about the upper portion of the chamber, lubricating the connecting-rod ends, valve-gear, main bearings, etc. These engines may, therefore, be allowed to run with full load, and without a single stop, for more than a month at a time, for the wear is exceedingly small, and all the parts can be kept well supplied with oil.

Vertical gas and oil engines, including high-speed motor car engines, are frequently lubricated in a similar manner, oil alone being used in the chambers.

CHAPTER XII.

THE COMPOSITION, DESIGN, AND LUBRICATION OF BEARINGS AND OTHER FRICTION SURFACES.

Forms and Functions of Friction Surfaces.—Bearings are the surfaces of contact between the moving parts and the frame of a machine, or of one moving part and another. They guide the motions of the pieces they carry, and their shapes depend on the nature of the motions required. When, for instance, the piece is required to move in a straight line, the bearing must be either plain or cylindrical, with the axis in the line of motion. On the other hand, rotating pieces must have surfaces accurately shaped to figures of revolution.

The parts of moving pieces which are in contact with the bearings may be classed as slides, gudgeons, journals, bushes, pivots, and screws. We also have to deal with "line" contact surfaces in worm-gear, cog-wheels, etc., which, if they do not act as guides, have relative motion.

Owing to the weight of the moving parts, or the stresses the machine has to transmit, the bearing surfaces are pressed together with considerable force. Consequently, not only must the moving parts and the frame of the machine be strong enough to bear the stresses to which they are subjected without elastic displacement, but the rubbing contact areas must be sufficiently large to prevent overheating and undue wear. To secure the required area of bearing, the rubbing surfaces are often made very long and narrow in the direction of motion, whilst in other instances they are square, or approximately circular.

Materials used for Bearings and Friction Surfaces. *Importance of Using Suitable Materials.*—Although it is true that, in the majority of instances, the selection of a suitable lubricant and its proper method of application to the surfaces are of paramount importance, it very frequently happens that the conditions of working are such that particular attention must be paid to the nature of the surfaces which are to work in contact, otherwise rapid wear will take place even though the coefficient of friction be low. Such wear generally results from the fact that the rubbing surfaces are exposed to the atmosphere and become dirty and gritty, or that the bearing is line contact, or that the motion is too slow or too fast and the load heavy.

The friction of solids when working the one upon the other varies greatly; for some solids are more unctuous than others, and it is always well to make the bearing of the most unctuous solid that will carry the load.

The possibility of maintaining a machine in good condition without the frequent renewal of parts depends largely upon the care which has been exercised in designing it, so as to secure the conditions under which perfect lubrication is obtained. When the conditions are such that perfect lubrication is impossible, care must be taken to make the rubbing surfaces of as durable a material as possible. To effect these objects under the diverse conditions of everyday practice, a large number of devices have been introduced, a few of the principal of which we propose describing.

Before the introduction of mineral lubricating oils, the necessity of paying considerable attention to the nature of the contact surfaces was not so great as now, for, as both animal and vegetable lubricants possess the property of oiliness or greasiness very markedly, metallic surfaces, separated by fatty oils, unless subjected to excessive loads, seldom injure each other seriously. On the other hand, since the introduction of the less " oily " mineral oils, it has been found more and more necessary to use the so-called " antifriction metals " as bearing surfaces. Indeed, a study of the effects produced by varying the nature of the metallic or other surfaces in contact has, of late years, been forced upon the engineer by the conditions of running and the nature of the lubricants available, with the result that greater attention is now paid to this point in machine design. Of course, the advantages gained by making the bearing surfaces of different materials were recognised at a very early date; but brasses and bronzes of various kinds, working against iron or steel, proved quite sufficient, as a rule, to prevent seizing and heating.

As, when two clean surfaces work against each other, the softer of the two (providing they do not seize) wears much more rapidly than the harder one, it is well to make the surface which is most easily and cheaply replaced of the softest material. The rubbing surfaces of a bearing are, on this account, removable pieces (steps or bushes), which are easily replaced by new ones.

Indeed it is not too much to say that the introduction of mineral oils, and the recognition of the true part played by viscosity in lubrication, have necessitated great alterations in the principles of design so far as the contact surfaces of machines are concerned; for mineral oils, although stable even when heated, and giving excellent results when they form viscous lubricating films, do not form good adsorbed lubricating films, and are deficient in lubricating power when the speeds are low and when the faces are pressed together by heavy loads.

In many instances, the conditions of work are such that efficient lubrication is impossible. For instance, parts of sewing machines and of watch and clock mechanism, knitting machines, and many other contrivances, such as machine-gun mechanism, have to depend very largely for their durability upon the hardness of the bearing surfaces and their suitability for working in contact with each other.

Many rubbing surfaces, such as the escapements of clocks and watches, either wear clean or have only such adsorbed films upon them as are derived from the atmosphere. In such instances it is absolutely necessary that the materials should be exceedingly hard, and be made of materials which will not adhere.

It is now becoming more clearly recognised that solids possess properties which have been generally regarded as peculiar to liquids. An adsorbed film, for example, gives a coefficient of friction which depends upon its chemical nature, and this is modified very considerably by the chemical nature of the solid upon which it rests. Bismuth working on bismuth, according to Hardy and Doubleday, gives a much smaller static coefficient than steel upon steel, and any particular interposed lubricant reduces the friction between these metals by an amount depending upon its oiliness. The unctuousness of solids will be further considered later.

Friction, wear, hardness, and strength are all properties of solids which have to be considered in the design of bearings; but the relationship of the one to the other is often obscure.

Hardness and its Determination.—Although we speak of bodies as being hard and soft, these are scarcely scientific terms, for the hardness of different substances measured in different ways is by no means always the same. For our purpose, hardness may be defined as the resistance offered to permanent plastic deformation. We must clearly distinguish between mere skin hardness and the hardness of the mass of the metal, for exposure to air, etc., or mechanical and chemical treatment, will often harden the surfaces of even soft bodies considerably.

TABLE CXLVIII.—RELATIVE HARDNESS OF METALS (*Bottone*).

Manganese,	1456	Gold,	979
Cobalt,	1450	Aluminium,	821
Nickel,	1410	Cadmium,	760
Iron,	1375	Magnesium,	726
Copper,	1360	Tin,	651
Palladium,	1200	Lead,	570
Platinum.	1107	Thallium,	565
Zinc,	1077	Calcium,	405
Silver,	990	Sodium,	400
Iridium,	984	Potassium,	230

A series of experiments by Bottone, who measured the load necessary to produce a cut of definite depth, show great differences in the hardness of different metals. In his scale of hardness the diamond is taken at 3010. His determinations of the relative hardness of twenty metals is given in Table CXLVIII. above.

The surface hardness may be determined by means of the sclerometer (hardness measurer), devised by T. Turner,[1] as shown in fig. 193.

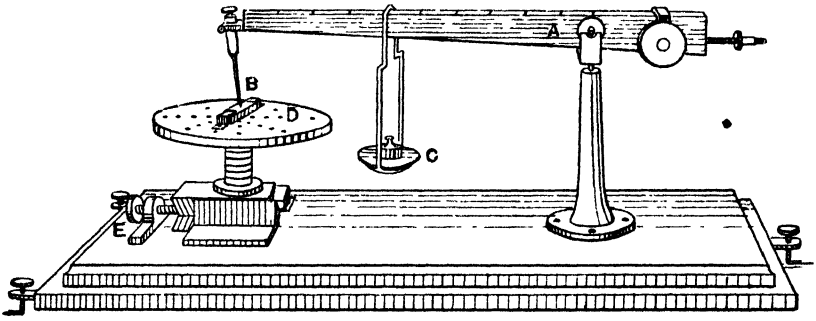

FIG. 193.—Turner's Sclerometer.

A steelyard beam A swings on a pivot in a horizontal plane and oscillates on knife edges in a vertical plane. At the end remote from the knife edge is a style B, shod with a diamond point. To prevent the style from chattering it is placed at an angle with the plane of the beam. A scale pan C slides along the beam, which is graduated, and by its means a load varying from 1 to 100 grammes can be placed upon the diamond point. The piece to be tested is prepared with a polished surface free from scratches, and is clamped on the rising table D. The diamond point is loaded with a known pressure and drawn across the polished clean surface. By means of the screw E the table is moved bodily a short distance—*e.g.* $\frac{1}{50}$ inch—and another trial made with a different load. The load which just suffices to abrade the specimen is a measure of its surface hardness. The instrument is preferably used in conjunction with a low-power microscope (1 inch objective) to view the scratches and decide which corresponds with the abrading load. The following table

---

[1] *Proc. Birmingham Phil. Soc.*, v. (1886), p. 291.

(Turner) shows the hardness of various materials, the numbers being the load in grammes required to just scratch the specimen when tested by the sclerometer:—

Steatite,	1	Softest iron,	15
Lead, commercial,	1	Mild steel,	21
Tin,	2·5	Tyre steel,	20–24
Zinc, annealed,	6	Hard cast iron,	36
Copper,	8	Hardest chilled iron,	72

Other forms of sclerometer have been invented by Martens,[1] and Jaggar.[2] A modified form of Martens' sclerometer, mounted on the stage of a microscope, is described by V. Pöschl.[3] For a fuller discussion of this subject, Turner's original paper on "The Hardness of Metals" determined by the scratch method should be consulted.[4] In a later paper,[5] by the same author, the results obtained by means of the sclerometer are compared with those given by the more recently devised scleroscope of Shore.[6]

The Shore scleroscope consists of a small weight or hammer, having a rounded diamond secured to its lower end. This is allowed to drop on the surface to be tested, and the height to which it rebounds is taken as a measure of the hardness. Even when the specimen to be tested is only one pound in weight, the results are accurate. The hammer rises and falls in a graduated glass tube, and the height to which it rebounds can easily be seen. By compressing a rubber bulb the hammer is caused to fall, and when the bulb is allowed to expand suddenly the hammer is drawn up again and secured by a small hook.

Unwin has devised a method of measuring hardness by using a straight knife edge as the indenting tool. Several series of observations of the indentations produced in ⅜-inch bars of different metals with various loads were made, and for each metal a constant was deduced which is a measure of its hardness. It was found that the equation $C\,i=p^{1\cdot2}$ may be taken as the relation between the load and the indentation, C being a constant giving the relative hardness of the metal tested, i the depth of the indentation in inches, and p the pressure in tons per inch width of knife edge in contact with the bar.

Using this formula, Unwin obtained the following numbers expressing the relative hardness of certain metals and alloys:—

Cast steel, normal,	554·0	Aluminium alloy, cast,	103·5
Brass No. 2,	246·0	Copper, annealed,	62·0
Brass No. 1,	221·0	Aluminium, squirted,	41·8
Mild steel,	143·5	Zinc, cast,	40·8
Copper, unannealed,	105·2	Lead, cast,	4·2

The relative scales of hardness obtained by both the scratch method and the indentation method are said to be practically the same, but the scale obtained with the indentation method is a more open scale than with the scratch method. Unwin's method is not suitable for very hard or brittle bodies, or for determining surface hardness.

The Brinell ball test, now extensively used, is made by pressing a hardened steel ball into the surface of the metal, under a fixed load, and the hardness

---

[1] A. Martens, *Mitt. k. techn. Versuchs-Anst.*, viii. (1890), p. 236.
[2] T. A. Jaggar, *Amer. Jour. Sci.*, [iv.], iv. (1897), p. 399.
[3] *Die Härte der festen Körper* (Dresden, 1909).
[4] *Chemical News*, lv. (1887), pp. 179, 195, 205, and 217.
[5] *Jour. Iron and Steel Inst.*, 1909 (No. 1), p. 426.
[6] A. F. Shore, *American Machinist*, xxx. (1907), ii. p. 747.

numeral is deduced from the magnitude of the indentation produced. The test can be made in any machine made for compression testing, with balls of various sizes. However, there are many machines designed for making such tests, some suitable for very small samples of the material to be tested, such as Moore's,[1] and others for testing bulky masses. Measuring microscopes are also supplied for taking diameters of indentations. As this is the only measurement it is necessary to make, and the accuracy of the hardness determination depends upon the correctness of the diameter of the indentation as compared with the diameter of the ball used, great care must be taken to make this measurement correctly. The nature of the adsorbed film on the ball and surface, acting as a lubricant, has some slight influence upon the depth of the impression.

The Brinell test gives the mass hardness of the material; to obtain the surface hardness the scratch method must be used; but when the surface hardness is the same as the mass hardness, both methods give comparable results.

Stanton and Bateson[2] state that the Brinell hardness number divided by 6 is approximately equal to the scleroscope number. However, the Brinell hardness number appears to increase gradually from 5·5 for very soft material to about 8 for materials over 700 on the Brinell scale.

We have seen that the Brinell hardness test is made by pressing a hardened steel ball under a known load into the material to be tested, and the hardness number is taken as the stress per unit of spherical area.

If P=pressure in kilograms,
D=diameter of ball used in millimetres,
d=diameter of indentation in millimetres,
h=the depth of indentation in millimetres,
then $h=\frac{1}{2}(D-\sqrt{D^2-d^2})$ mm.,

and the spherical area of indentation

$$A=\pi Dh=\frac{\pi D}{2}(D-\sqrt{D^2-d^2}) \text{ sq. mm.}$$

The Brinell Hardness Number$=H=P/A$.

The Herbert Pendulum Hardness Tester[3] consists of a hard ball of steel, or other hard material, fixed so that when the pendulum swings about its centre of gravity the ball rolls through a small angle on the material to be tested and forms a groove. The point of contact of the ball with the metal upon which it rests is about 0·0039 inch above the centre of gravity of the pendulum. Secured to the pendulum is a curved spirit-level, the bubble in which shows the angle at which it rests. If the instrument be tilted until the bubble comes to D on the scale, and is then released, it swings farther the harder the metal tested. This is called the *Scale Test.* The time taken to make ten swings is called the *Time Test,* and this is easily converted into Brinell Hardness Numbers.

Hardness and Friction.—Mrs. Ida Bircumshaw[4] has made a number of experiments on the static friction of metals, with and without lubricants, and the results are given in Table CXLIX. During the experiments the metallic surfaces became badly torn, and frequent polishing was necessary. In the

---

[1] *Jour. Inst. Mech. Eng.*, 1921, pp. 51–61.
[2] *Ibid.*, 1916, p. 693.
[3] Made by Messrs. Edward G. Herbert, Ltd., Atlas Works, Manchester.
[4] *Proc. Roy. Soc.*, cvi. (1924), pp. 341–346.

course of the measurements it was observed that the solids which gave the lowest values of μ were those which were most torn by the sliding of the surfaces over one another, and from a microscopic examination of the faces it appeared that, *arranged in order of decreasing wear and tear*, the solids were also in order of increasing μ. An attempt was, therefore, made to correlate friction with the "hardness" of the solid faces, and with this object the hardness of the *well-cleaned* solids was measured by the Brinell method. There did not, however, appear to be any direct relation between the hardness of the solid and the static friction.

TABLE CXLIX.*

Lubricant.	Phosphor Bronze. μ.	Nickel Chrome Steel. μ.	50-Ton Alloy Steel. μ.	Medium Carbon Steel. μ.	Mild Steel. μ.	Bismuth. μ.
Heptane, . .	·589	·577	·511	·475	·431	·346
Octane . . .	·565	·553	·490	·455	·411	·320
Undecane, . .	·503	·490	·423	·388	·342	..
Propyl alcohol, .	·566	·552	·485	·456	·417	..
Octyl ,, .	·436	·427	·371	·342	·298	..
Undecyl ,, .	·366	·358	·299	·268	·230	..
Heptoic acid, .	·355	·351	·312	·290	·255	..
Caprylic ,, .	·295	·291	·252	·227	·200	..
Decoic ,, .	·172	·170	·131	·108	·074	..
No lubricant . .	·94	·93	·88	·83	·74	..
Brinell hardness, .	166	250	199	255	134	..

* In all cases these tests show the static coefficient of each metal upon itself.

The static friction between two solids, whether in the clean or lubricated condition, is in fact dependent upon the chemical nature of the material, and it must be remembered that the chemical nature of a metal such as steel is altered by hardening. Experience shows that mild steel, cast iron, and certain alloys known as "white metals" form the best bearings, the white metals being supported in a suitable frame, as some are brittle and others are soft.

Rapid wear does not necessarily show that the friction is high. Indeed it is often necessary to put up with a rather high friction to make the bearing durable. Hard steel is, therefore, used very frequently for spindles working in cast-iron bushes. At present, engineers have to be guided by experience only in the use of bearing metals, the physical properties of the metals and alloys affording them very little help.

It is clear that in the design and working of machinery quite a large number of considerations have to be given attention to, so as to enable the moving parts to run freely upon each other without heating, seizing, or breaking. Iron, in the form of wrought iron or mild steel, has a surface the unctuousness of which materially assists the lubricant to reduce the frictional resistance of its surface. For bearing "brasses," metals are used which give low coefficients of friction against the shaft or journal. White metals are now generally used for bearing surfaces, but as these alloys are either brittle or soft they have to be supported by a frame made of a tougher material. We thus have " white metalling " resorted to.

Further frictional reductions can be effected by using the best oily lubricants, or reducing the extent to which friction is present by using ball or roller bearings.

The evolution of the modern bearing has been a slow process, the result of experiment and observation, and it is only quite recently that an insight into the laws governing the action of lubricants has been discovered.

Hard Steel.—In the case of line contact, such as occurs in the various forms of trip gear for Corliss engine valves, the best results are obtained with tempered steel faces, screwed, or otherwise secured, to softer metal supports. Such faces last well if reasonable care be taken to keep them free from grit, and to lubricate them efficiently with a fairly viscous oil.

Hard steel surfaces having considerable contact areas, and carrying heavy loads, are, as a rule, made to work against softer materials. When two such hard surfaces have to work against each other, they must be very accurately fitted, and such provision made in the design as will admit of an equal distribution of the load, even if the parts should not run quite accurately together.

Low carbon steel, if used for shafting, cranks, journals, and the like, is very apt to give trouble, the metal being too soft to make good bearings. On this account, engine makers frequently order steel containing as much as 0·4 per cent. of carbon. Large forgings of such material should be normalised, to ensure that the condition of the steel is uniform and that it is readily machinable.

Soft steel is also very liable, when running on hard bronze bearings, especially if the lubrication becomes defective, to seize locally and pick up particles of bronze which become alloyed with the iron and increase at every revolution by attracting fresh particles, like a rolling snowball, until at length serious heating and damage are the result.

When it is necessary to make the surfaces as hard as can be obtained by the use of very high carbon tempered steel, the speed of rubbing is generally low. There is consequently a very small liberation of heat.

Case-hardened Iron and Steel.—Hard steel is too brittle for pins, links, and for such parts as the axles, cups, and cones of cycles. These are, therefore, made of case-hardened iron or mild steel, *i.e.* iron or steel of which the surface only has been hardened, leaving the core soft. This is effected by heating the articles to a suitable temperature (about 1000° C.) in a closed box filled with finely powdered carbonaceous material such as charred leather, horn cuttings, etc., for a length of time depending upon the depth to which the carbon is required to penetrate. After cooling, the articles are reheated to about 800° C. and hardened by quenching in water. Case-hardening, unless carefully carried out, is apt to cause cracks and also to distort the mass of metal. Wrought-iron and mild steel journals of large diameter are, consequently, seldom case-hardened.

Whenever very hard surfaces are made use of for bearings, it is necessary to accurately grind the case-hardened surfaces to ensure contact over the whole area.

Chilled Cast Iron.—For slide-blocks and slides, chilled cast-iron surfaces, ground true, are even more suitable than those of steel or case-hardened iron. Here the hardening effect is produced by casting the fluid iron into massive metal moulds or " chills," the sides of which are previously coated with a clay wash to prevent the casting adhering to them. In this way the cast metal is rapidly cooled, the graphite is prevented from separating from the iron, and the chilled portion of the casting becomes extremely hard, and, if broken, shows a silvery fracture. In the cooling process, however, the casting is much distorted. To remedy this, the pattern must be made of such a shape that the cooling effects shall draw the casting into the required form. To reduce the risk of fracture, it is customary to make chilled surfaces in loose pieces, which can be bolted to the frame of the machine or to its moving parts.

Cast Iron.—Excellent bearing surfaces are made of unchilled grey cast iron. The only objection that can be urged against this metal is that it is rather brittle, especially when heated by friction. It not only works well in contact with steel or wrought iron, but also against itself. Even when heated it does not seize readily, the surfaces grinding to powder and remaining free to slide over each other so long as any solid material remains. On this account it answers well for steam cylinders, in which the lubrication is apt, at times, to be very imperfect. Loose pieces are not necessarily required, for the barrel and valve faces are generally merely machined portions of the casting.

The suitability of cast iron for bearing surfaces arises, no doubt, in great measure from the presence of free graphite in the iron, which is thus rendered to a certain extent porous to the lubricant. Sometimes powdered solids, such as plumbago, are used as lubricants for cast-iron surfaces, the powder being dusted upon the exposed portions of the rubbing surfaces.

Bronze.—In the majority of instances, the material of which a bearing is made must not only differ in melting-point and hardness from that of the surface against which it rubs, but it must also be sufficiently strong and tough to withstand heavy blows and great stresses without fracture. Copper, although it possesses a high malleability, softness, ductility, toughness, and tenacity, is not a suitable metal of which to make bearings, for it can only with difficulty be made to produce sound castings, and is too tough and close-grained to be easily shaped in a lathe. Copper is, therefore, alloyed with other metals, forming bronzes and brasses of various kinds.

The metals generally added are tin, lead, and zinc, but other elements, such as phosphorus, arsenic, antimony, bismuth, manganese, and iron, may occur as essential or accidental constituents of the alloy.

The term " bronze " should be restricted to alloys composed chiefly of copper and tin. " Gun-metal " is a bronze containing 90 per cent. of copper and 10 per cent. of tin. One or two per cent. of zinc, or a small amount of phosphorus, is usually added to the metal before casting, to remove oxide and promote soundness. When phosphorus is used, the alloy is known as " phosphor bronze." Tin confers hardness and, up to a certain percentage, strength upon the alloy in proportion to the amount present; it reduces the coefficient of friction, and enables a heavier load to be carried. The British Admiralty specification for gun-metal castings is copper 88 per cent., tin 10 per cent., zinc 2 per cent. The mechanical properties specified are a tensile strength of not less than 14 tons per sq. inch, and an elongation of at least 7·5 per cent. on 2 inches. When cast under the best conditions, the strength of this alloy may rise to 18 or 20 tons per sq. inch, with from 11 to 16 per cent. elongation (Longmuir). Bronzes used for bearings and friction surfaces sometimes contain as much as 18 to 20 per cent. of tin, but such alloys are hard and brittle, and have practically no elongation. It has been shown[1] that the copper-tin alloys containing up to about 13 per cent. of tin are, under equilibrium conditions, homogeneous solid solutions of tin in copper, which are strong and tough; beyond this percentage, a tin-rich ∂ constituent makes its appearance, which is hard and brittle, and confers these properties on the alloy in proportion to the amount present. As

---

[1] Heycock and Neville, *Phil. Trans.*, ccii. A., pp. 1-69; Shepherd and Upton, *Jour. Phys. Chem.*, ix. No. 6475.

ordinarily cooled, however, the limit of saturation is round about 9 per cent. of tin, and when more than this is present the δ constituent makes its appearance. Longmuir states that for propeller shafts, an alloy was formerly employed containing 88 to 82 per cent. copper, 10 to 14 tin, and 2 to 4 zinc. Beyond 14 per cent. tin, the alloy was found too hard and brittle, and 10 per cent. of tin could not safely be exceeded, except for solid bearing brasses. Steel shells lined with white metals are now used in place of these solid bearing brasses.

"Phosphor bronze" is a term applied to copper-tin alloys cast with phosphorus, but these alloys divide themselves into groups having very different properties. Alloys of the gun-metal type cast with phosphorus as a deoxidiser, and containing mere traces of phosphorus, have the properties of the best gun-metal; the phosphorus merely promotes soundness and nothing more. True phosphor-bronzes are alloys of copper, tin, and phosphorus, made from the purest ingredients; those used for bearings may contain from 84·5 to 91 per cent. of copper and 0·37 to 0·85 per cent. of phosphorus, according to analyses by Philip.[1] These alloys owe their hardness and resistance to abrasion to the presence of a network of a hard copper-phosphide which is embedded in a matrix formed by the softer copper-tin alloy. Billington states that a small percentage of lead is a great advantage in phosphor-bronze used for bearings, and that bearings so made wear much more slowly than those made of pure phosphor bronze. The percentage of phosphorus should not exceed 0·6 per cent. (Billington). Philip thinks phosphorus up to 1 per cent. or more may be an advantage.

Dicks conceived the idea of adding lead and phosphorus to the copper-tin alloy, thus producing a lead-bronze bearing metal, some time after Hopkins had invented his lead-lined bearing (p. 503). The lead does not alloy with the copper and tin, and, unless proper care be taken in casting, it will separate out, but by well stirring the molten metal and by pouring it at not too high a temperature, so that it will solidify quickly in the mould, the lead remains diffused throughout the alloy, and confers upon it valuable properties. Although it weakens the bronze, it greatly increases its plasticity and reduces the amount of wear. Dicks' alloy, manufactured by the Phosphor Bronze Smelting Co., became known as Standard Phosphor Bronze Bearing Metal, "S" brand, and was adopted by the Pennsylvania Railway Co. after careful experiments by Dr. Dudley,[2] who obtained the results given in Table CL.

TABLE CL.—RELATIVE WEAR OF BRONZE BEARINGS (*Dudley*).

Alloy tested	Composition.					Relative Wear.
	Copper.	Tin.	Lead.	Phosphorus.	Arsenic	
Standard lead (phosphor) bronze 'S,'	79·70	10·00	9·50	0·80	...	1·00
Ordinary bronze, .	87·50	12·50	...	...	...	1·49
Arsenic bronze 'A,' .	89·20	10·00	...	...	0·80	1·42
Arsenic bronze 'B,' .	82·20	10·00	7·00	...	0·80	1·15
Arsenic bronze 'C,' .	79·70	10·00	9·50	...	0·80	1·01
Bronze 'K,' . .	77·00	10·50	12·50	...	...	0·92
Bronze 'B,' . . .	77·00	8·00	15·00	...	...	0·86

---

[1] *Jour. Inst. Metals*, i. (1909), p. 164.

[2] *Jour. Franklin Inst.*, 1892, pp. 81–93 and 161–172.

The method of experiment adopted by Dudley was to take a certain number of bearings made of the standard alloy, and an equal number made of the experimental alloy, and to place these on locomotive-tender or car axles in pairs, a standard and an experimental bearing being placed on opposite ends of the same axle. The relative rates of wear were ascertained by weighing the bearings at intervals. The "ordinary bronze" not only wore half as fast again as the standard lead bronze, but a much larger percentage of the bearings made of it heated. Arsenic gave the same results as phosphorus. These elements merely promote sound castings; they were found to have no marked influence upon the rate of wear. Increasing the percentage of lead still further reduced the rate of wear, as shown by the alloys "K" and "B." Bronze "B" had a tensile strength of 10·6 tons per sq. inch, with 11 per cent. elongation, whilst the standard lead (phosphor) bronze had a tensile strength of 13 tons, with 6 per cent. elongation. Dudley concluded from his experiments that "the alloy which can endure the greatest amount of distortion without rupture will give the best results in wear." In other words, plasticity combined with the necessary strength is the quality to be sought after. Another desirable feature in a bearing metal is a finely granular structure, which tends to reduce the size of the particles which are torn off by the friction.

Clamer [1] confirmed and extended the work of Dudley. He used a specially designed friction-testing machine, with test-bearings, measuring 3½ inches × ½ inch, which could be readily weighed. In each experiment, the journal (3¾ inches in diameter) made 100,000 revolutions at a speed of 525 revolutions per minute, the same pressure (1000 lbs. per sq. inch), oil, and method of lubrication being used throughout. It was found that the rate of wear diminished, though the friction and temperature increased, as the percentage of tin in the bronze was decreased and the percentage of lead increased (see Table CLI.).

TABLE CLI.—RELATIVE FRICTION AND WEAR OF LEAD BRONZE BEARINGS (*Clamer*).

	Copper.	Tin.	Lead.	Friction. lbs.	Temperature above room °F.	Wear in Grms.
1	85·76	14·90	...	13	50	·2800
2	90·67	9·45	...	13	51	·1768
3	95·01	4·95	...	16	52	·0776
4	90·82	4·62	4·82	14	53	·0542
5	85·12	4·64	10·64	18½	56	·0380
6	81·27	5·17	14·14	18½	58	0327
7	75 ?	5 ?	20 ?	18½	58	·0277
8	68·71	5·24	26·67	18	58	·0204
9	64·34	4·70	31·22	18	64	·0130

In order to prevent segregation of lead in the mould when casting the alloys containing more than 15 per cent. of lead, it was found necessary to keep the tin below 6 or 6½ per cent.; and, even then, some segregation took place unless great care was taken to pour the metal at the proper temperature. The addition of ½ to 1 per cent. of nickel, however, was found to cause more rapid solidification of the alloy, and enabled good castings to be more easily obtained.

According to information kindly supplied by Mr. M. E. M'Donnell, chief

---

[1] *Jour. Franklin Inst.*, 1903, pp. 49–77.

chemist, the alloy known as "Ex. B. metal," which contains 15 per cent. of lead, is still used (1926) on the Pennsylvania Railway, and has proved to be a very satisfactory bearing metal. It withstands hammering nearly as well as the standard "S" bearing metal of the Phosphor Bronze Co. The plastic bronze of the Ajax Metal Company, containing much more lead, is largely used in the United States, and has been found to give excellent results for locomotive driving-box shells, where it is well supported, and also for ordinary car bearings. It has, however, been found that the journals wear a little faster the higher the percentage of lead in the bearing metal.

Manganese bronzes and brasses are made by introducing a proportion of ferro-manganese into bronze or brass. A variety of manganese bronze which has great strength and toughness has been used for very large bearings. Great strength and toughness has also been secured by adding aluminium, in small proportion, to bronze.

Bronzes of various qualities are very extensively used for bearings, working both with and without lubricants. In many cases, such as where the alloy works against the bearings of cast-iron rolls, the heat resulting from excessive friction is prevented from raising the temperature unduly by a stream of water. Bronzes are also used for bearing surfaces working against steel and iron, when the load is not excessive and fluid lubricants are used, also for steam engine slide-valves working against cast-iron surfaces, especially when the load resulting from the steam pressure is great. Bronze and cast-iron surfaces are very hard and unyielding, and, unless the surfaces are very true and run accurately upon each other, they are apt to bind heavily in places and cause overheating, more especially if non-oily or non-greasy lubricants are used.

When zinc is substituted for tin, the alloy is a brass. For bearing surfaces brass is by no means so good as bronze. Nevertheless, as zinc is much cheaper than tin, and brasses are less expensive than bronzes, they are much used in cases where, owing to the load being light, strength and ductility are of secondary importance. Zinc must not be added to bronzes containing lead, as it increases the friction and also the rate of wear of the bearing.

TABLE CLII.—COMPOSITION OF SOME BRONZES USED FOR BEARINGS.

Description.	Copper.	Tin.	Lead.	Zinc.	Other Elements.	Authority.
Ajax plastic bronze, . . .	64·0	5·0	30·0	..	Nickel, 1·0	Clamer.
Ajax bronze, ...	81·2	11·0	7·3	..	Phosphorus or arsenic, 0·37	Dudley.
'Anti-attrition' bronze for slide-valves,	78·8	9·5	11·8	..	..	..
Camelia metal, ...	70·2	4·3	14·8	10·2	Iron, 0·5	Dudley.
Carbon bronze, ...	75·5	9·7	14·6	..	Carbon, possible trace	,,
Cornish bronze, ...	77·8	9·6	12·4	..	..	,,
Damascus bronze . . .	76·4	10·6	12·5	..	..	,,
Damaxine bronze for slide-valves,	81·3	15·9	1·5	1·5	..	..
Delta metal, ...	92·4	2·4	5·1	..	Iron, 0·1	Dudley.
Graney bronze, ...	75·8	9·2	15·1	..	..	,,
Harrington bronze, . . .	55·7	1·0	..	42·7	Iron, 0·7	,,
Lafond's alloy for heavily loaded bearings,	83·0	15·0	..	3·0	..	Charpy.
Manganese bronze, . . .	90·5	9·6	..	..	Manganese nil	Dudley.
Phosphor bronze, . . .	79·2	10·2	9·6	..	Phosphorus, 0·94	,,
,, ,, ...	84·5–91·0	8·4–14·5	..	..	Phosphorus, 0·37–0·85	Philip, (10 samples).
Tobin bronze, ...	59·0	2·2	0·3	38·4	Iron, 0·1	Dudley.

In Table CLII. the percentage composition is given of a number of miscellaneous bronzes used for bearings. In Table CLIII. are given the standard specifications of the American Railway Association for plain, unlined bearings of driving-box shells, rod bushings and rod brasses for locomotives, and Table CLIV. gives the standard specifications for the backs of lined journal bearings of locomotive tenders, and passenger and freight cars. On British railways the alloys generally used for the white metalled bearings of locomotives and rolling stock are bronzes containing from 8 to 15 per cent. of tin and up to 5 per cent. of zinc or lead or both. One railway uses a brass composed of copper 86·5 per cent. and zinc 13·5 per cent. Manganese brasses are also used. Similar alloys are used on the European continental railways.

Table CLIII.—American Railway Association Specifications for Plain Bearings.

Per Cent.	Phosphor Bronze.	Hard Bronze.	Medium Bronze.	Soft Bronze.
Copper, not exceeding . .	82	80	77	69
Tin, not less than . . .	8	8	7	4
Phosphorus, ...	0·4 to 1	0 to 0·1	0·2 to 0·6	. .
Lead, ...	8 ,, 13	10 ,, 15	14 ,, 20	26 to 33
Other elements and impurities, not exceeding . . .	1	1	1	1

Table CLIV.—American Railway Association Specifications for Lined Bearings.

Composition of Back of Bearing.	Per Cent.	
	Class A.	Class B.
Lead,*	16 to 24	24 to 30
Tin,*	5 ,, 7	4 (minimum)
Copper, ...	67 ,, 77	63 to 72
Other elements and impurities (maximum),	4	3

* Within the ranges permitted, the tin and lead should vary, if at all, in opposite directions, the tin being increased for lower percentages of lead.

The strength and efficiency of a bearing depends upon the structure of the metal it is made of quite as much as, if not more than, upon its chemical composition, and a good structure is dependent upon careful foundry practice. Job,[1] who paid a great deal of attention to the causes of hot bearings in railway work, found that the main causes which led to heating were: (1) segregation of the metals composing the alloy; (2) coarse crystalline structure; and (3) dross or oxides and gas cavities in the metal.

Segregation was found to be due in many cases to an attempt to alloy the metals in improper proportions, notably to the use of excess of lead with ordinary foundry practice, resulting in liquation of part of the lead and often, also, the separation of part of the copper as "copper spots." Pouring the metal too rapidly at too high a temperature is a very frequent cause of segregation and coarse crystallisation, since the metal then remains molten too long in the mould, giving time for constituents of different composition

---

[1] *Jour. Franklin Inst.*, cxlix. (1900), pp. 439–450.

to crystallise out separately, tending to produce surfaces of unequal hardness and heat capacity, which localises friction and ultimately results in excessive heating. A fine-grained and practically uniform structure may be obtained, even with a mixture of metals which do not truly alloy, by comparatively slow pouring, so that the metal solidifies as soon as possible after it has entered the mould, but not pouring too slowly, as this leads to the formation of "shot" in the bearing, through the freezing of the metal before it has flowed completely into the mould. The proper rate of pouring must be determined by experiment.

The coarse crystalline structure often seen in defective bearings was, in some cases, found to be due to the composition of the alloy, antimony especially tending to produce it. In many cases, it resulted from rapidly pouring the metal at too high a temperature, and often it was traced to an excess of phosphorus, silicon, or other deoxidising agent. A coarse structure is detrimental in two ways. It tends to localise friction, and, secondly, by decreasing the ductility and tensile strength of the metal, it causes an excessive rate of wear, for it has been proven by different experimenters that, with a given tensile strength, rapidity of wear increases with brittleness.

Another very common defect in the bearings was the presence of dross or oxidised metal, and of large amounts of occluded gas. The former, by abrading the journal, causes increased friction and heating; the latter, by reducing the area of the bearing surface, increases the pressure and the wear and tear. Dross causes the metal, unless raised too highly in temperature, to pour sluggishly in casting, and it also prevents clean and sharp castings from being obtained. This sluggishness can be entirely cured by the chemical action of any good deoxidising material. Thus, a small amount of phosphorus (preferably added as phosphor-copper) causes a marked increase of fluidity, and imparts to the metal a much denser microscopical structure, as well as greater strength and ductility. Phosphor bronze is noted for its fluidity, closeness of structure, strength and wearing qualities, provided it does not contain excess of phosphorus. Excess leads to the formation of a crystalline network which increases with repeated remelting, until finally the metal is more defective than if no deoxidation has been attempted. Excess of silicon leads to similar results.

The action of zinc in producing sound castings has long been known, but, as Dudley pointed out in 1892, the amount of zinc added should not be more than 1 or 2 per cent. Any excess left in the alloy tends to cause weakness, and to decrease both tensile strength and ductility. In large railway foundries, "yellow brass" is apt to accumulate in the scrap heap, and if much of such metal be added to the pot a considerable proportion of zinc may be introduced into the mixture, and comparatively rapid wear will result. Such yellow metal should be kept separate, and only added in just sufficient amount to each pot to introduce the requisite proportion of zinc. Zinc alone does not, however, effect complete deoxidation, and Job considers it desirable to add also a very little silicon (in the form of silicon copper) after adding the spelter or yellow metal. In this way a very close-grained and ductile metal is obtained at a moderate cost. The amount of silicon needs to be very carefully regulated, in order to avoid the partial crystallisation caused by excess.

Very carefully conducted experiments made by placing bearings of practically the same composition, but differing widely both in tensile strength and ductility, upon opposite ends of the same axles, have invariably shown that increase of strength and ductility result in increased life of the bearings, confirming the observations of Dudley. An instance is given in which eight bearing brasses, each composed of copper-tin-lead mixtures, were placed under tenders of fast passenger locomotives, one bearing of each set being placed upon one end of each axle. All the bearings were practically of the same chemical composition, but one set had a tensile strength of about 16,500 lbs. per sq. inch, with an elongation of about 6 per cent., whilst the other set had a tensile strength of about 24,000 lbs., with an elongation of about 13 per cent., the difference being due to the fact that in the one case the metal was porous, whilst in the other it was thoroughly deoxidised, close-grained, and homogeneous. The defective set of brasses wore 35 per cent. more rapidly than the others.

In the foregoing remarks, bronzes and brasses have been considered as friction surfaces, but it is now frequently the practice to coat the surfaces of bearings with white, so-called, "antifriction" alloys, which form the friction surface. The bronze or brass part of the bearing then becomes merely a support for the white metal, and its composition has no influence upon the friction. Such bearing brasses can frequently be made from scrap metal, a suitable composition being:—

Copper,	84
Tin,	10
Lead,	2
Zinc,	4
	100

but the exact composition is of secondary importance, so long as the requisite strength is obtained.

White Metals.—Clamer, in a paper read before the American Society for Testing Materials in 1907, attributes the idea of lining bearings with lead to D. F. Hopkins in 1870. He tinned the surface of the bronze bearing, placed against it a mandrel, poured as thin a lining as possible of lead between the mandrel and the bearing, and so produced what he called a self-fitting bearing. This invention developed in two directions. Lead was introduced into the bronze by Dicks and cast with it as a plastic bronze alloy; on the other hand, Hopkins' idea led to the lining of the rigid bronze with a plastic alloy. Lead, being found too plastic, was hardened and stiffened by adding antimony, and to stiffen the alloy still more, tin was added. Eventually, Babbit's metal and other ternary alloys were introduced and are now largely used, owing to the comparative ease with which they can be scraped down to form smooth and polished surfaces, and the satisfactory way in which by their use the friction is kept low under conditions which do not admit of perfect lubrication. This is partly owing to their plastic nature, which enables these alloys under pressure to mould themselves to the form of the journal, and thus, by increasing to the maximum the area of the surfaces in contact, distribute the load more equally over the bearing; but it is also largely due to the chemical nature of the alloy, which forms a good antifriction surface. Such bearing surfaces are also more economical than those made of bronze, for the metal removed by wear can be replaced at very small cost, and without destroying the bronze, brass, or cast-iron step of which it forms the rubbing surface.

The use of white metal also, in many cases, enables mineral lubricants deficient in oiliness to be used in place of the more costly fatty oils. The mineral oil of Pechelbronn, for instance, was found very satisfactory when used in connection with white metal on the Eastern Railway of France,[1] where it was tried for high-speed railway vehicles. Not only was a great

---

[1] *Revue Générale des Chemins de Fer*, April 1885, p. 216.

pecuniary saving effected by using this oil as a lubricant in conjunction with white metal, but the number of heated axles was reduced in the proportion of about 7 to 1. At a later period [1] it was found by the same railway company that with a certain type of boxes those provided with white-metal bearings became heated thirty-seven times less frequently than those having bronze bearings. The decrease in the number of hot boxes, for the same type of boxes, resulting from the substitution of white metal for bronze, varied from year to year, but the statistics always indicated a decided advantage in favour of white metal. On the Paris-Lyons and Mediterranean Railway, it was found that the substitution of white metal for bronze in the case of coal trucks, fully loaded and forming trains of 300 tons moving at a speed varying between 27 and 42 kilometres per hour, gave a diminution of friction of 20 per cent. The white-metalled bearings became heated less frequently than those of bronze, and wore less rapidly.[2]

The general practice is to cast recesses in the surfaces of bearings of the ordinary form, fill them with the white alloy, and then tool and scrape the surfaces so as to fit the shafts or journals they are to work upon. Generally speaking, the bearing block or "brass" is made of a tough bronze; for marine work, however, cast iron is now largely used. The white metal is let into the surface, in longitudinal or diagonal strips, which stand a little "proud" of the cast iron. This gives the shaft a chance of quickly producing a true smooth-bearing surface, which, as it wears, allows the shaft to slowly put a good face on the cast iron as well. The initial process of producing a good face should be effected under easy conditions of running, so as to avoid overheating. Being porous, the cast-iron surface is easily contaminated by small flakes of white metal, which, to some extent, act as lubricants. If, from any cause, a bearing of this description should become overheated and the white metal melted away, then the surfaces of the cast-iron ribs carry the load; and, if the bearing be kept cool by directing a stream of cold water upon it, the engine need not be stopped until a favourable opportunity occurs.

To ensure the adhesion of the white metal to the bearing, the brass, bronze, or cast-iron surface must first be thoroughly cleaned and tinned. Brass and bronze bearings can be most readily cleaned by dipping or pickling for a short time in nitric acid (aqua fortis), or in a mixture of this with sulphuric acid (oil of vitriol) and water, afterwards well swilling with water to remove the acid; or the articles may be scraped and filed clean. Old bearings which need remetalling must first be boiled with caustic soda solution, or cleaned with petroleum, to remove oil and dirt. The clean and bright metallic surface must then be heated and well tinned with pure tin or white metal, using zinc chloride ("killed spirit of salt") or sal-ammoniac as a flux, and wiping off with tow. Cast iron is best cleaned with emery cloth, after all grease has been removed, and tinned with sal-ammoniac. With a lump of sal-ammoniac and plenty tin or white metal there is little difficulty in getting a well-tinned surface on cast iron, provided it is clean and free from grease.

As white metals liquefy at about 440° to 480° F., they may be melted in ordinary ladles and run directly into the recesses prepared for them, the journal or shaft side of the mould being outlined by a suitable loose iron block. As some of these alloys do not adhere very well to the walls of the recesses prepared for them, the supporting edges of the latter should be bevelled in such a way that the soft alloy is mechanically held in position.

In melting white metals they must not be overheated, as they readily oxidise on the surface, and if hard particles of the oxide or dross thus formed

---

[1] *Bull. Internat. Ry. Congress*, 1896.

[2] *Revue Générale des Chemins de Fer*, 1894.

become enclosed in the cast metal, the friction is increased and the bearing is very likely to run hot. Some oxidation is unavoidable, and, therefore, care must always be taken, when pouring the metal, not to allow the dross or any other foreign substance to enter the mould. When white metal becomes dirty or pasty through being kept melted and used for some time, a small piece of rosin or tallow stirred into it will assist the dross to rise to the surface, when it may be skimmed off.

In casting antifriction alloys on to a bearing the metal should be melted at a temperature sufficiently high to keep it fluid (say 750° to 850° F.) and not higher, and poured on to the bearing heated to a temperature sufficiently high to tin it, but not hotter. If poured too hot, or on to too hot a surface, the solidification of the alloy takes place slowly, and a coarse crystallisation results, which is detrimental to cool running. Neither should the bearing on to which the metal is cast be too cold. Thus Behrens[1] cast the same white metal around (1) a red-hot core, (2) a hollow core cooled by running water, and (3) a core heated to 100° C. (212° F.). When tested on a mandrel of polished steel revolving at high speed, the white-metal blocks cast round the red-hot and cold cores heated much more rapidly than the block cast round the moderately heated core. Overheating not only causes a coarse structure, but the melted metal oxidises rapidly, forming a quantity of dross which is apt to find its way into the bearings, besides leading to waste of the metal and an alteration of its composition. The temperature is best controlled by means of a pyrometer fixed in the metal bath, but a skilful workman can tell whether the metal is overheated by the rate at which the clean surface oxidises and by placing a strip of thin paper on the surface of the metal. If not overheated, the paper will simply char and smoke, but if the metal is too hot the paper will take fire and burn.

A large number of antifriction white alloys have come into use, and as might be expected from the great variations in their composition, they vary in the extent to which they reduce the coefficient of friction, in their toughness and hardness, and also in their cost. In Table CLV. are given the compositions and mechanical properties of eight representative white metals discussed in a recent paper by Messrs. Mundey, Bisset, and Cartland.[2] They are used for the following purposes:—

1. This alloy was mostly favoured for aero-engines throughout the war, and gave excellent results.
2. An alloy very useful for general work for main bearings.
3. This particular alloy is excellent in its resistance to shock.
4. A very useful alloy for heavy loads and high speeds: Diesel engines, turbines, rolling-mills, locomotives.
5. Used for internal combustion engines of all types, steam engines, dynamos, locomotives, etc.
6. Useful for heavy pressures and medium speeds, or medium pressures and high speeds; automobile engines, railway and tramway bearings.
7. Useful for medium pressures and speeds, or light pressures and high speeds.
8. Fairly representative of the alloy known as Magnolia metal, which sometimes includes a little bismuth. This alloy has recently been found to retain its carrying power under elevated temperatures better than many tin-base bearing metals.

Generally speaking, these white alloys get softer as the lead conte increases, and also lose their power of resisting shocks.

---

[1] *Metallographist*, 1900, p. 4.

[2] *Jour. Inst. Metals*, xxviii. (1922), pp. 141–152.

TABLE CLV.

	Metals forming Alloys.				Tensile Tests.		Brinell Hardness Number.	Compression Test. Tons per sq. inch.	
	Tin.	Antimony.	Copper.	Lead.	Tons per sq. inch.	Elongation per cent. on 2 ins.	10-mm. Ball 500 kg.	Yield-point 0 001 in.	Compressed to half length.
1	93	3·5	3·5	..	5·12	11·6	24·9	3·57	14·73
2	86	10·5	3·5	..	6·65	7·1	33·3	4·37	17·23
3	83	10·5	2·5	4·0	5·6	None	34·5	4·28	17·64
4	80	11·0	3·0	6·0	5·7	,,	32·1	4·64	17·50
5	60	10·0	1·5	28·5	5·04	,,	27·1	3·70	12·86
6	40	10·0	1·5	48·5	4·58	,,	21·8	3·66	11·28
7	20	15·0	1·5	63·5	5·48	,,	31·3	4·02	12·21
8	5	15·0	..	80·0	4·69	2·8	24·9	3·59	13·36

The diagram (fig. 194) shows the manner in which the majority of white metals used vary in composition with increasing percentages of tin. Such alloys as that known as “ plastic metal,” usually containing approximately

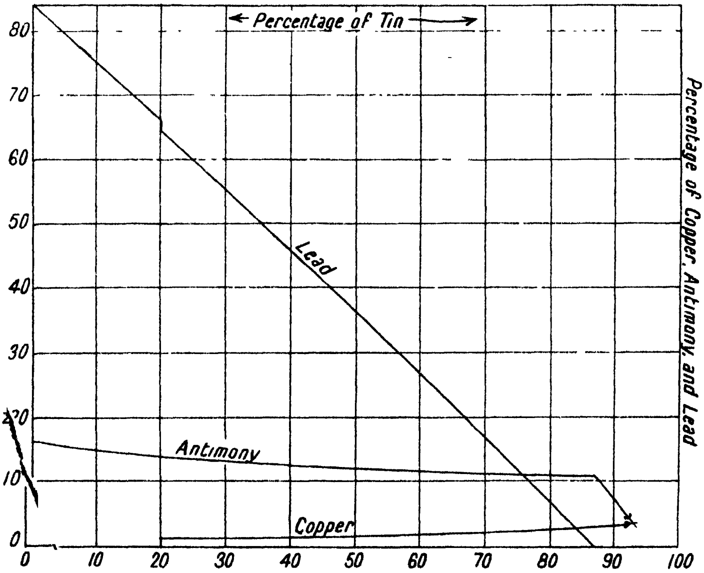

FIG. 194.—White “ Antifriction ” Alloys.

78 per cent. of tin and 11 each of antimony and copper, do not come in this series, as this is a special alloy adapted for repair jobs in emergency cases; t has a prolonged freezing-point, and can be “ wiped ” on to a bearing needing air in the same manner as a plumber's joint is made, and needs no tinning e surface. It is hard and durable.

some white metals, zinc replaces lead, and in a few, small quantities uth, iron, nickel, and other elements are found.

The white metals used by railways in the British Empire fall generally into four groups, of which the following are typical:—

TABLE CLVI.—WHITE METALS USED ON RAILWAYS IN THE BRITISH EMPIRE.

	1.	2.	3.	4
Tin, ...	85	60	12	40
Antimony, . . .	10	10	13	10
Lead, ...	..	28	75	48
Copper, ...	5	2	..	2

Nos. 1, 2, and 3 have been adopted by the Association of Railway Locomotive Engineers (Railways of Great Britain and Ireland) as a group of standard alloys capable of meeting all requirements. No. 1 is used by nearly all the English, Scotch, and Irish railways where the bearings are subjected to hammering stresses. No. 3 alloy is used chiefly for tender and wagon axle bearings. No. 2 alloy is used by one English railway for all bearings. The Scottish section of one railway is exceptional in using a zinc base alloy, an analysis of which gave results as below:—

Zinc, ...	78·0
Tin, ...	13·8
Copper, ...	6·0
Iron, ...	1·0
Lead, ...	0·8
Antimony, ...	0·3
	99·9

The New Zealand Government Railways use a white metal containing no tin, and composed of lead 85·7 per cent. and antimony 14·3 per cent., approximately the composition of the eutectic alloy of these metals. The same alloy, with 2 per cent. of tin in place of 2 per cent. of the antimony, is used by the Canadian National Railways. Standard specifications of the American Railway Association are given in Table CLVII., alloys of Class 1 being used for linings of a nominal thickness over ⅛ inch, and alloys of Class 2 for linings of ⅛ inch or less.

TABLE CLVII.—WHITE METAL SPECIFICATIONS OF THE AMERICAN RAILWAY ASSOCIATION.

Composition of Lining Metal.	Per Cent.	
	Class 1.	Class 2.
Tin, ...	3 to 5	0·5 to 1·5
Antimony, ...	8 „ 10	..
Antimony + tin, ...	12 to 14	3 to 5
Arsenic (maximum)	0·2	..
Total of other impurities (maximum), .	0·5	0·5
Lead, ...	85 to 88	94 to 96

without seizing. Bismuth gave trouble when 60 lbs. per sq. inch was exceeded. All the others stood 100 lbs. per sq. inch without seizing. Copper, antimony, and zinc all gave low coefficients of friction. It is clear that the value of tin must be greatly improved as a bearing metal by its admixture with antimony and copper, for alone it gives a high static coefficient and will not carry more than 20 lbs. per sq. inch against cast iron.

As an illustration of the extent to which these soft alloys reduce the friction when working on hard steel at ordinary speeds without lubricants, we may instance the case of Magnolia metal. R. H. Smith states that when running with pure water instead of a true lubricant the coefficient is as low as 0·03, the load being about 400 lbs. per sq. inch. With brass, under similar conditions, the friction is five times as great.

When the pressures per sq. inch are great, or the bearings are subjected to severe shocks, very hard mixtures are required. Soft metals under such circumstances suffer severely, their surfaces being rubbed off in flakes.

According to Dewrance, very little lead or zinc should be contained in white metals which have to be lubricated with oils containing free fatty acids, as these acids form soaps very readily with the two metals named, and, therefore, corrode badly. Tin is not attacked so readily, and the safer plan is to use an alloy composed principally of this metal.

Most of the white metals used contain antimony. This metal has the important property of preventing the mass from shrinking much upon solidification, or of actually causing it to expand and, therefore, fill the cavity into which it is run. When present in the alloy in large proportion, it makes the mixture very hard and brittle. The hardening effect is, however, generally obtained by the use of tin and zinc, toughness by copper, and softness by lead. Zinc does not alloy with lead in all proportions, and it will be found that these metals are seldom present together in alloys. Tin, on the other hand, alloys well with both copper and zinc.

The high pressures and, consequently, high temperatures at which steam engines now work renders hemp or other fibrous packing unsuitable for piston-rod glands, for the fibre is charred by the heat and the packing loses its firmness. Metallic packings have, in consequence, largely superseded vegetable fibre. The following is an analysis of a packing which stood well in the piston-rod gland of an express locomotive:

Lead.	Tin.	Antimony.	Copper.
0·25	88·18	3·51	7·78

When lead is used in place of tin the alloy is too soft, and the metal is forced out of the gland in flakes.

Sometimes such alloys are placed in the stuffing-boxes, either in the form of rings or solid segments, or they are fixed as segments in special frames which are free to move laterally so that no undue pressure shall be put upon the rubbing faces if the piston rod should not run quite true. Such packings require regular and good lubrication, and the piston rods must be kept truly cylindrical, or the metal will shell out of the gland and steam will escape.

The most extensive investigations of white antifriction alloys have been made by Behrens,[1] Charpy,[2] and Baucke,[3] from whose papers the following notes are taken.

Charpy considers that bearing surfaces should be hard if a low coefficient of friction is desired, and the harder the surface the greater the load which

---

[1] *Das mikroskopische Gefüge der Metalle und Legierungen.*

[2] *Bull. Soc. d'Encouragement,* June 1898; and *Metallographist,* ii. (1899), p. 9.

[3] *Metallographist,* iii. (1900), p. 4.

can be carried before abrasion begins. But in practice, owing to the irregularities in bearing surfaces, contact takes place at only a small number of points, where the pressure is concentrated, and the wear and friction then become excessive. Hence a plastic metal which, under pressure, can mould itself to the form of the journal and increase the area of the surface in contact is desirable.

The results of microscopic examination show that all the antifriction alloys are composed of hard grains, embedded in a plastic alloy. The plasticity of the alloy makes it possible for the bearing to adjust itself closely to the shaft, thus avoiding excessive local pressure. Such constitution may be produced in binary alloys, the hard grains being composed of a single metal such as antimony, or of a definite compound such as zinc antimonide, etc., but it is preferable to use ternary mixtures because, owing to the complex composition of the "cement," a constitution possessing the required qualities may be more readily obtained. The constitution of bronzes is the reverse of that of white metals. Instead of hard grains embedded in a plastic eutectic, they contain plastic crystallites of copper embedded in a hard eutectic. Bronze, therefore, has a greater tendency to cut than the antifriction alloys. When, from any cause, the film of oil becomes squeezed out from between the journal and the bearing, and the metal becomes heated, white metal wears rapidly and may fuse, but the shaft is but little affected. In the case of bronze the portions rich in copper adhere to the shaft, as already mentioned, forming a rough surface which greatly increases the friction.

Lead-antimony Alloys.—Lead and antimony do not combine chemically, though they alloy in all proportions. The eutectic alloy contains 13 per cent. Sb and 87 per cent. Pb, and is seen to be composed, when examined under the microscope, of very fine alternate lamellæ of lead and antimony. It melts at about 249° C. (480° F.). Other alloys contain either free lead or free antimony embedded in the eutectic alloy. The only alloys of lead and antimony which can be used in practice as antifriction metals are those containing from 15 to 25 per cent. of antimony ; alloys richer in lead are too soft, and have a tendency to cut, whilst those richer in antimony become brittle and are liable to break under a heavy load.

Lead-tin Alloys.—Lead and tin do not combine. Their alloys are always composed of crystalline needles, either of lead or tin, embedded in an eutectic alloy containing about 38 per cent. Pb and 62 per cent. Sn. The maximum compressive strength is found in the eutectic alloy itself, which is the one in which the constituent metals are the most finely divided. It melts at 180° C. (356° F.).

Lead-tin-antimony Alloys.—Antimony greatly increases the compressive strength of alloys of lead and tin. In order to avoid brittleness, the proportion of antimony in the alloy should not exceed 15 to 18 per cent., and to obtain in these conditions as high a compressive strength as possible, the alloy should contain between 15 and 90 per cent. of tin. All the ternary alloys containing at least 10 per cent. of antimony consist of hard grains, composed of a compound of antimony and tin, embedded in a eutectic alloy. These alloys, therefore, have a similar structure to the binary lead-antimony alloys, but the presence of tin as a constituent of the hard grains diminishes their hardness and also their brittleness, and, as a constituent of the eutectic alloy, increases its compressive strength. The ternary alloys are, therefore, Charpy considers, superior to the binary lead-antimony alloys as antifriction metals. The proportion of tin must exceed 10 per cent., but need not exceed 20 per cent. The antimony may vary between 10 and 18 per cent. These alloys are said to wear better than the tin-antimony-copper alloys, probably owing to their high percentage of lead, but they are less cool in running and therefore less suitable for high speeds than the alloys high in tin; having a comparatively low compressive strength, they are unsuitable for high pressures (Hague).

Tin-antimony-copper Alloys.—According to Behrens and Baucke, white antifriction alloys of tin, antimony, and copper (which always contain a large proportion of tin) are composed, morphologically, of minute malleable cuboids of SbSn, and brittle needles of CuSn, embedded in a matrix or ground mass composed of tin containing a percentage of copper and antimony which is greater the more rapidly the metal has been cooled. Of all the alloys examined by Charpy, the one possessing the greatest compressive strength without being brittle was composed of Sn 83·33, Sb 11·11, Cu 5·55, and Charpy considers that the best alloys should probably have such a composition within 3 or 4 per cent. The rate of cooling has a great effect on the size of the cuboids, and the compressive strength is greater the quicker the cooling. Hague points out that these alloys have the greatest compressive strength of all the white metals not containing zinc, and they run the coolest.

Lead-antimony-copper Alloys.—On adding copper to lead-antimony alloys the copper is taken up by the antimony, forming the compound $SbCu_2$, which crystallises in violet-coloured needles. The same compound also forms a part of the eutectic alloy, and the compressive strength of the metal increases. If too much copper be added, segregation takes place; the alloy then contains some drops rich in copper, having the ordinary constitution of copper-antimony alloys in the midst of an alloy rich in lead which solidifies later and exhibits some grains of Sb and $SbCu_2$. From the fact that the addition of copper to alloys containing less than 13 per cent. of Sb decreases instead of increases the compressive strength, it follows that the composition of these ternary alloys should vary only within relatively narrow limits. By adding to alloys of lead and antimony containing from 15 to 25 per cent. Sb an amount of copper not exceeding 10 per cent., it is possible to raise materially the compressive strength and to produce some alloys of similar constitution to those of tin, copper, and antimony. The Chemin de fer de l'Est has used as metallic packing for locomotive and tender bearings an alloy containing—

Lead,	65
Antimony,	25
Copper,	10
	100

A few of the antifriction alloys contain zinc as a main constituent. An example is given on p. 507. Some of these alloys possess a very high compressive strength, and the tin largely neutralises the very great brittleness of the zinc-antimony alloys. They are relatively cheap, but difficult to prepare, owing to the oxidisability of the zinc, which is said to be exaggerated in the presence of antimony.

Goodman, who has been engaged for several years in the investigation of antifriction alloys, discovered some time ago that the presence of very small quantities of certain metallic "impurities" has a remarkable effect upon the friction.[1] The alloys in question were composed of lead, antimony, and tin. It was found that the addition of 0·1 per cent. of aluminium increased the friction 20 to 30 per cent.; on the other hand, if a similar amount of bismuth were added, instead of aluminium, the friction was reduced. The curious observation was made that whilst 0·1 per cent. of bismuth reduced the friction somewhat, and 0·2 per cent. reduced it still more, if 0·3 per cent. were added

---

[1] *Third Report to the Alloys Research Committee* (1895), p. 289.

the friction went up again under heavy loads; and by a series of experiments it was found, as shown previously by American experimenters, that about 0·25 per cent. of bismuth gave the best result; from this proportion up to about 1 per cent. of bismuth the friction immediately became much higher than it was with the best percentage. Goodman states that he has found that if the "impurity" added to the alloy be a metal of smaller atomic volume than the alloy itself, the friction goes up, and if it be a metal of larger atomic volume, the friction goes down. As the result of long experience and investigation, Goodman informs us that pure lead is one of the best anti-friction metals for bearings working under fairly constant loads up to about 500 lbs. per sq. inch. In the friction-testing machine illustrated on p. 450 the test journal runs in cast-iron bearings lined with lead.

White metals composed of tin, antimony, copper, and lead soften very appreciably with rise of temperature, the Brinell hardness number at 100° C. being only about half what it is at ordinary temperatures.

Wood and Hide.—In spur and bevelled gear we have to deal with line friction. Here, one set of teeth in a pair of wheels working together is often made of some hard and dense wood, such as crabtree, hornbeam, locust, or beech, fitted into an iron frame, or centre, in such a way that the teeth can be taken out and replaced with new ones when much worn. Box, beech, holly, elm, maple, oak, hickory, canewood, snakewood, and lignum vitæ are also much in request for shaft bearings, etc. Of these lignum vitæ, which will sustain very great pressures without abrasion, is, perhaps, the most valuable, more especially as it works well under water. Such bearings as those of stern frame blocks and the gland in a ship's side to keep the water from entering, have this wood let into grooves cut into bushes of bronze. The strips thus let in stand somewhat above the metallic surface, so as to allow of a free circulation of water, and the grain is placed at right angles to the rubbing surface of the shaft. Lignum vitæ, also, is sometimes used for hydraulic valve faces, pivots, etc. The circumstance that it works well under water is no doubt due to the fact that throughout the cells forming the woody structure are distributed resinous substances which act as lubricants, and, however much it may be abraded, the surface of the wood is always separated from the metal by a lubricant.

Rhinoceros hide is also largely used for gear wheels, as it wears well with small loads and runs silently.

Other Non-Metallic Materials.—In the case of watches and very light, continuously running machinery, which cannot be regularly lubricated, hard steel pins running upon agate or jewelled bearings give the best results.

Even for large shafts, stone bearings are occasionally adopted. The natural stones suitable for this purpose are those which are wholly free from grittiness, and somewhat inferior in hardness to iron. Gypsum, pure clay slate, pure compact limestone, marble, and silicate of magnesia or soapstone (the last being the best) are those in most general use. Many soft rocks, such as sandstone, sandy limestones, and slates, are not suitable, as they contain crystals of quartz—a hard mineral which scratches and grinds down even the hardest steel. A non-metallic material for bearings, called "adamas," consists of silicate of magnesia, ground, calcined, moulded by hydraulic pressure into blocks of suitable figures, and baked. The advantages to be gained from a lubrication point of view from the use of silicate of magnesia result from its combining a certain unctuousness of surface with a degree of hardness sufficient to secure the requisite durability.

Several other mixtures of solids have been introduced which, it is claimed, run well on iron or steel without the use of any liquid lubricant whatever. They almost all contain graphite, mixed with some binding material.

At present it is only where, for some reason, oil or other lubricant is objectionable that such antifriction materials are used, well designed and properly lubricated surfaces having proved more reliable and economical.

A solid bearing for shafts, etc., called "carboid," has been introduced by Killingworth Hedges. It is said to consist of powdered carbon mixed with a certain proportion of steatite, with the twofold object of consolidating the friable carbon and decreasing the friction. The "carboid," which may be fixed to the rough surface of a casting by a special cement, has been used for machinery for fine fabrics which oil would injure, for the bearings of steam-heated cylinders, and also for such bearings as cannot easily be lubricated. Unwin, who determined its friction coefficient, found that it followed somewhat closely the laws of solid friction.

Asbestos is also largely used as an antifriction packing for taps and valves. It may be compressed until it becomes dense and hard and capable of carrying a very considerable load, yet, owing to its fibrous nature, it holds together and forms a good smooth-bearing surface.

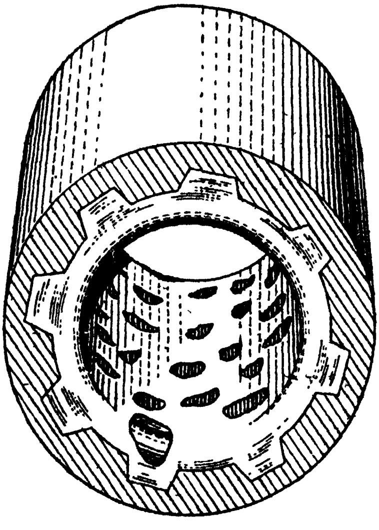

FIG. 196.

Stone Lined Bushes.[1]—A new form of bearing (fig. 196), the invention of an Altona engineer, which is being introduced on a large scale for industrial and railway purposes, consists of white metal in which special stones are embedded. The pressure of the shafting is mostly taken up by the stones, the white metal serving merely to keep them in position The stones consist of a variety of limestone, which, being rather porous, has the property of taking up a certain quantity of oil. The stone is harder than bronze and antifriction bearing metal, but softer than the metal used for shafting, which becomes polished like a mirror without being ground away.

In making the Beusch bearings, which are manufactured by the Maschinen and Wellenlager Gesellschaft of Altona, a mould is formed, consisting of the ring of the bearing and an inner core, the intermediate space receiving the stones. Before the liquid white metal is run in, the mould and stones must be heated to about 400° C., or about midway between the ordinary temperature and the temperature of casting. After cooling, the bearing must be turned to the required diameter. For this purpose a diamond in a turning lathe is best, as steel is too soft, even if well hardened ; moreover, with the diamond an absolutely uniform cylindrical section can be ensured.

Oil absorbed in the stones is the best lubricant for these bearings. Tallow or similar grease is not suitable. Another advantage claimed for the bearing is that the position of the shafting remains unaltered, even if lubrication is neglected and the bearing metal becomes so hot as to be melted. The life of the bearing is several times greater than that of bearings of the normal form using the same antifriction metal. Trials on the Leipzig tramways

---

[1] *The Times Trade Supplement*, 23rd September 1922.

have shown that they will run 45,000 miles, and in Mainz, Chemnitz, and Hamburg a figure of 35,000 or 45,000 miles has been attained, the normal life of similar bearings without stones being 6000 or 7000 miles. The metal used was composed of 5 per cent. of tin, 80 per cent. of lead, and 15 per cent. of antimony. For heavy railway wagons 4 or 5 per cent. of copper should be present, in order to allow a higher specific pressure and to avoid deformation by which the stones might be loosened.

Bearings of the old style may be fitted with stone bushes if the white metal bush is at least $\frac{1}{4}$-inch thick. If the thickness is less, axial grooves to receive the stones may be cut in the bearing proper by a shaping machine. By an improved method of casting, the stones are kept radially in the exact position in which they are intended to lie, so that they are distributed uniformly round the shafting.

The Lubrication of Bearings.—Before proceeding to describe the design and methods of lubrication of bearings it may be useful to give a brief summary of the main conclusions arrived at in the chapter on the "Theory of Viscous Lubrication."

Friction and Speed.—It was shown in Chapter V. that both in the case of cylindrical and flat surfaces, when the speed exceeds about 10 feet per minute and the lubrication is good, the resistance offered to the relative motion of opposing surfaces, owing to the viscosity of the intervening lubricant, is approximately proportional to the square root of the speed. At lower velocities, however, the frictional resistance follows quite different laws.

Although the conditions obtaining when the load is small (10 lbs. per sq. inch in the case of plane surfaces and 50 lbs. when the bearing is cylindrical) are interesting from a theoretical point of view, such loads are seldom used in practice, except with very high speeds. We may, therefore, omit consideration of them here, and merely deal with such loads as have to be placed upon ordinary bearings, *i.e.* those which exceed 40 lbs. per sq. inch in the case of plane surfaces and 100 lbs. for journals.

When we have to deal with well-lubricated surfaces and ordinary loads, the coefficient of friction of rest is slightly less, to judge by such experiments as are available, than that of very slow motion, but when the surfaces and the lubricants are quite clean and smooth the static coefficient and the coefficient of slow motion are identical. With increasing speed a maximum is soon reached, beyond which the coefficient of friction rapidly decreases as the speed rises, until between 10 and 100 feet per minute is reached. At about 10 feet per minute, if the lubrication be good, it should be at a minimum. The diagram, fig. 22 on p. 42, has been drawn to show the variation of the coefficient of friction with change of speed.

Slow-Speed Lubrication.—The oil-films remaining between surfaces which have been pressed together, without tangential motion, for some time, are superficial adsorbed films. They are in all cases exceedingly thin, probably monomolecular in many instances.

All substances when brought into contact and caused to slide over each other exhibit frictional effects, the friction being in most cases proportional to the load pressing them together. The coefficient of friction, μ, is therefore independent of the load. Each substance has a value for μ which is invariable, and varies very little indeed with change of temperature. The value of μ for steel varies with the chemical composition of the sample: the same is true for glass or any other substance.

When liquids or soft solids are spread over the surfaces of hard solids such as iron, bismuth, tin, etc., they form adsorbed films upon them whose thicknesses are of molecular dimensions. They are chemically combined with the metal, and form, as it were, a solid skin upon it. The solid adsorbed film of each kind of liquid on each kind of solid surface has a static coefficient μ which is invariable except with very light loads; but any change in the composition of the solid surface, or of the liquid forming the film, alters the value of μ. The more unctuous the surface upon which the adsorbed film rests the smaller is the value of μ, and conversely the more oily the liquid the smaller is the value of μ for each solid surface to which it is attached. This will be clearly seen from Table CXLIX. on p. 495.

High-Speed Lubrication. It has been shown that when the speed of rubbing is considerable, and the load not too heavy, the manner in which the friction varies with changes of load, speed, and viscosity, is such as to prove that it is then wholly due to the viscous resistance offered by the lubricant itself to motion, and is unaffected by the nature of the metals forming the rubbing surfaces.

The fact that the friction is decreased by a thickening of the lubricating film has already been fully explained. As the effect, however, is by no means self-evident, we will illustrate the case by reference to a simple experiment. A face plate is flooded with a reasonably thick oil, and upon the oil-film is placed another face plate of smaller size. At the moment the oil is enclosed, the film is a thick one, and the smaller plate may be moved about with the greatest ease. As, however, the oil is slowly pressed out from between the surfaces the resistance to motion increases rapidly, and if the upper plate be a heavy one, the surfaces will, in a short time, close together and cause a still greater increase in the friction. From this it is clear that the thinner the oil-film the greater is the frictional resistance, and *vice versa*.

When the rubbing surfaces, whether plain or cylindrical, are maintained in constant and rapid relative motion, oil is forcibly intruded, and a film is maintained between them which reduces friction enormously. The object of the engineer should, therefore, be so to design his bearings that this film shall be as thick and have as small a viscosity as possible. When these results are obtained, the frictional resistance is very small, and the wear *nil* or nearly so.

Imperfect lubrication, we notice, results either from the fact that the speed of rubbing is very slow, that the supply of oil is restricted, or that the weight upon the bearing is too great.

When it arises from the first of these reasons, good results can only be obtained by making the surfaces that come into contact of such materials as will not readily seize or gall each other, and by using very oily lubricants. It is, however, to an imperfect supply of the lubricant that the greatest losses by friction can generally be traced.

For many years it was the custom to put just as little oil upon a bearing as would prevent it from running hot, economy of oil being secured in the great majority of instances at the expense of the machinery and fuel. Economy in the use of lubricants is also obtained by the use of grease, but, as in the case above, with loss of power. for although greases tend to remain between the rubbing surfaces and form thick films, they are very viscous or even plastic.

However, more perfect methods of lubrication are now being introduced, and the advantages secured by their adoption are becoming more widely appreciated every day, for power users frequently keep a record of the energy exerted by their prime movers, and compare it with the energy actually consumed in doing useful work. The difference is, of course, lost in friction during transmission, and so great is this loss very often, that users of power and practical engineers are looking closely into the design of bearings, etc., with a view to securing conditions favourable to a low coefficient of friction.

The fact is now appreciated that not only have simple means been devised for supplying the lubricant in such a manner that the friction is reduced to a minimum, but lubricants are now readily obtained which can be used over and over again and not wasted.

It should be clearly understood that the possibility of making practical use of such devices as will give results comparable with those obtained by Beauchamp Tower dates from the introduction of mineral oils and of non-acid fatty oils blended with them.

The original objection to *reservoir* bearings was that they required, in the first instance, a large supply of oil, which soon became viscid and useless by oxidation, etc., and that the reservoirs had to be frequently recharged.

This objection can no longer be considered valid, for good oils may now be obtained, a single charge of which can be allowed to work continuously for ten or twelve months without becoming objectionably viscid or acid.

The pressure films produced by the trapping of the lubricant when the supply is good are very considerably thicker than adsorbed films. In a particular instance, by an electrical contact method, Goodman found that a lubricating film had a thickness of one five-thousandth part (0·0002) of an inch. Osborne Reynolds, from the friction of a particular bearing, estimated it to vary, in different parts, from 0·00077 to 0·000375 inch in thickness (0·0195 to 0·0095 mm.). Kingsbury[1] experimented with a journal 3·82 inches in diameter and 10 inches long, bearings and journal having exactly the same radius. The chords of the bearing surfaces were 3 inches each, the speed 80 and 190 revolutions per minute, and the journal was flooded with oil. By measuring the displacement of the bearings, the oil film was found to have a mean thickness of from 0·00021 to 0·00023 inch under loads varying from 27 to 270 pounds per sq. inch. Kingsbury has reported[2] later experiments made by the Westinghouse Electric and Manufacturing Co. at East Pittsburgh, in which the thickness of the oil-film was measured at different speeds up to 1200 revolutions (4710 feet) per minute. In this case the shaft was 15 inches in diameter, the bearing 40 inches in length, flooded with oil, and the total load on the bearing was 94,000 lbs. The thickness of the oil-film on the "on" side of the bearing ranged from about 0·0019 inch at 470 revolutions per minute to about 0·00314 inch at 1070 revolutions per minute. On the "off" side of the bearing the film was found at all speeds to be thinner than on the "on" side, as was theoretically proved by Osborne Reynolds must be the case with "perfect" lubrication. Kingsbury states that the film thickness was probably greater than the above measurements indicated, owing to the flexure of the shaft.

In Chapter V., on "The Theory of Viscous Lubrication," the manner in which this film forms and thickens as the speed increases has been as fully considered as is possible without the introduction of advanced mathematical methods.

As previously pointed out, the importance of securing perfect lubrication has become more and more recognised since the classical experiments of Beauchamp Tower on the friction of lubricated surfaces were made. He showed that the methods of applying the lubricant to the bearing in common use are often very imperfect, and not only lead to great waste of oil, but fail to allow the bearings to make the best use of what they do get.

As is almost always the case with improvements designed to give increased economy, the introduction of better designed bearings and lubricating arrangements has been comparatively slow, for, as we shall find, there are mechanical

---

[1] *Trans. Amer. Soc. Mech. Eng.*, xxiv. (1903), p. 143.

[2] *Ibid.*, xxvii. (1905), p. 425.

difficulties to be overcome before, in all cases, the best results can be obtained, and the improved bearings are not always the cheapest or the simplest.

Then, again, the designs of bearing in common use, and the methods of lubrication adopted, have been the result of experimental practice which did not take much note of the actual frictional resistances met with, except when they were so great that serious heating was caused. Unscientific methods have consequently been largely followed, a cheap rather than an economical bearing being aimed at.

But it is certain that the engineer is not now content with a bearing simply because it does not run hot and give trouble. His object, as we have said, is to reduce the friction and wear to a minimum, and enable the power of his motor to be expended upon the work in hand rather than in overcoming avoidable resistances.

Even at the risk of appearing to emphasise too strongly the value of the many new designs which have been introduced for securing perfect lubrication, we shall illustrate some of the best and most largely used of them for the purpose of showing the direction in which design is now moving. In the immediate future there is every reason to expect that many improvements in detail will be introduced, and instead of the design of the rubbing surfaces of a machine and the method of application of the lubricant being regarded as of comparatively little moment, they will receive their proper share of attention by the draughtsman. Steam and other motors, etc., will then be less likely to give trouble, owing to overheated or damaged bearings, than is now the case.

In the discussion of his report on friction experiments, Beauchamp Tower[1] said it seemed to him that the important practical inference is, that it is actually possible to so lubricate a bearing that not only would metallic friction be altogether done away with, and thereby the amount of power lost by friction be reduced, but metallic wear and tear would also be abolished. He would not say that such a result was actually possible in practice now, but it was a reasonable one to aim at in mechanism. By giving a profuse lubrication, and by having the brasses so arranged that there should be a uniform pressure all over their surface, it was possible to have wear and tear between metal and oil, instead of between metal and metal.

To a reduction in the frictional resistance of the machine we must, therefore, also add the increased life of its parts secured by the adoption of more perfect systems of lubrication, and both of these advantages may, if we use proper blends of oil, be secured without increased cost or waste.

Positions for Oilways.—At high speeds, given a good supply of lubricant of proper quality applied at the proper place, a layer of oil becomes trapped between the rubbing surfaces and completely separates them. Upon this film rests the load. The oil, therefore, is under very considerable pressure towards the centre of the bearing surface, but as we approach the edges, the pressure falls off, and reaches zero at the margin. This is no theoretical assumption, but a fact which Beauchamp Tower discovered by perforating the brass of a journal, and connecting to the hole a pressure gauge.

As the load is completely oil-borne, the distribution of pressure in the film depends upon the direction in which the load acts. The formation of the film or pad of oil results entirely from the viscous properties of the lubricant, as also does the friction. When the speed of rubbing is slow, the lubricant is not trapped between the surfaces to any great extent, and does not form a thick sustaining film. In such cases, a lubricant possessing the property of oiliness or greasiness, rather than viscosity, is necessary, fatty oils giving the best results.

[1] Second Report on Friction Experiments, *Proc. Inst. Mech. Eng.*, 1885, p. 64

The lubricant is then kept between the surfaces because the oil or grease films powerfully resist rupture. Oilways, therefore, may be cut along those parts of the faces which are being forcibly pressed together, and can be made of such lengths, and extend in such directions, that owing to the close fit of the parts they will retain the oil fed to them. This cannot, however, be done with advantage when the speed of running is high and the lubrication "perfect," for oilways cut along faces to the edges, or from holes drilled where the pressure film should be, allow the oil to escape, and the surfaces then close together.

When the lubrication is "imperfect," the speed of running being only moderate and the journal of large diameter, it is often very difficult to keep the bearing cool, even if fatty oils of considerable viscosity are used. In such cases, grooves, and sometimes mere flat surfaces of small width, are cut on the cylindrical surface of the journal. At other times, spiral grooves are cut round the surface of the journal, or, perhaps, several short grooves are cut at different points of the circumference. These grooves carry the lubricant between the rubbing surfaces, and the latter, therefore, are prevented from becoming dry.

C. E. Hefford[1] found that such a flat surface filed about 22° on the "idle side" of the crank pin of an engine which always rotates in the same direction gives good results.

Such devices, however, except when the speeds are low, only serve to remedy the evils which result from imperfect lubrication, and should not be used in cases where the conditions are suitable for securing "perfect" lubrication.

In the case of fixed machinery, the moving parts, in the majority of instances, rest upon the bearings, and run at speeds which admit of perfect lubrication. The lubricants in these cases can be supplied through holes and grooves cut in the cap of the bearing, for the pressure film or pad is on the lower brass. On the other hand, the axle bearings of railway vehicles rest upon the journal, and the lubricant should be supplied at the bottom or sides. Grooves in the top brasses allow the lubricant to escape, undue wear takes place, and the bearings are liable to run hot. Vertical engine main bearings are often subject to forces which tend to lift the shaft from its seat and force it against the bottom and top brasses alternately. In this case we require a pressure film on the top as well as on the bottom brass, and no grooves should be cut in either of them. The lubricant, under such circumstances, must be applied at both sides of the bearing.

In all bearings, the oil is intruded along the "on" side of the brass, and is expelled along the other three sides and ends. Fig. 197 shows a plan of such a surface, and the arrows indicate, roughly, the paths of the oil across it. A portion of the oil escapes at the ends, the quantity being large when the film is thick and the lubrication good, and if some means be not devised for causing the oil thus expelled to return to the source of supply, it will be thrown about and wasted. In the majority of modern bearings guards are cast at the ends of the pedestal, and the oil, as it is thrown into them from the collars on the shaft, flows into a reservoir below the axle.

Another plan (fig. 198) for preventing the expulsion of the oil is to cut oilways near the ends of the bearing, and, by bevelling the brass, to provide channels along the edge to distribute the lubricant along the journal face. If possible, all grooves in the brasses should be avoided, for dirt is apt to collect in them and fill them if they are not large.

Beauchamp Tower's experiments on the frictional resistance and loads carried by bearings with different methods of lubrication may be recounted

---

[1] *The Practical Engineer*, 1st October 1897, p. 331.

here with advantage, as they show in a very striking manner how important it is to cut the oilways of bearings in proper positions. Several methods of oiling were tested by him.

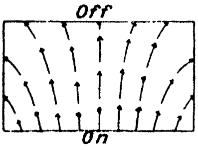

FIG. 197.

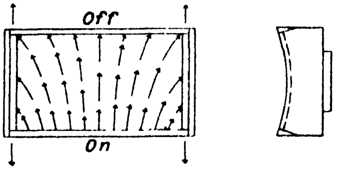

FIG. 198.

When the lubricant was supplied through a hole drilled in the crown of a brass (fig. 199) which rested upon a journal, and was distributed by means of a groove parallel to the axis of the brass and extending nearly to the ends of the bearing, it was found that the journal would not run cool when the load exceeded 100 lbs. per sq. inch. It appeared that the hole and groove being in the centre of pressure of the brass, allowed the supporting oil-film to escape.

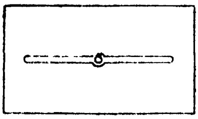

FIG 199.

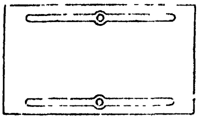

FIG 200.

This view was confirmed by filling up the hole with the lubricant and then easing the weight off the journal for an instant. This allowed the oil to sink down the hole and lubricate the journal; but immediately the load was again allowed to press upon the journal, the oil rose in the hole to its former level and the journal became dry; thus showing that this arrangement of hole and groove, instead of being a means of lubricating the journal, was a most effectual means for collecting and removing all oil from it.

In practice, greater loads are carried with this faulty system of lubrication than these experiments would seem to indicate the possibility of. This, no doubt, results from the vibrations and side-play of the axle-box on the journal, and also to the imperfect fit of the brass, which allows the oil which is fed to the groove to get out and wet the journal. When the brass is a very good fit and the oil cannot thus escape, the bearings heat and give trouble. Small grooves, however, cut from the end of the oilway to the end of the brass will often put matters right, for the lubricant can then escape at the ends and reach the journal by a circuitous path.

As the centre of the brass was obviously the wrong place to introduce the oil, Tower resolved to apply it at the sides, where two grooves were accordingly made. They were cut parallel to the axis of the journal, as shown in fig. 200, and extended nearly to the ends of the brass. With this arrangement the bearing did not seize until the load reached 380 lbs. per sq. inch.

The arrangement sometimes used for locomotive axles was also tested. The oil was introduced through two holes, one near each end of the brass, from each of which ran a curved groove, as shown in the plan, fig. 201.

This brass refused to take its oil or run cool when the load exceeded 178 lbs. per sq. inch.

In many instances, such as locomotive bearings, siphon lubrication has to be mainly depended upon, it being impossible to use the same oil over and over again as in the case of some bearings *shortly to be described*. To retain the oil as much as possible, and prevent its expression in undue quantities at the ends of the journal, an oil-groove may be cut as shown in fig. 202. The lubricant is fed in by the siphon wicks through the holes A A on the "on" side of the brass, and returns through the groove from the "off" to the "on" side, being thus used several times in succession. When it is possible to use an oil-pad below the axle, the two escape grooves B B may be cut. The oil raised from the pad by the rotation of the journal is then returned to the pad by escaping through these grooves; and is thus prevented from being wasted at the sides. Such holes and oilways must be of ample size.

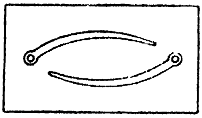

FIG. 201.

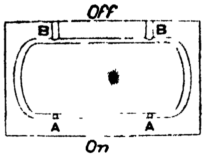

FIG. 202.

Pad Lubrication. - Having tested siphon lubrication with oilways of various kinds, Beauchamp Tower experimented with brasses which had no oilways cut in them, the lubricant being supplied by pads pressed against the undersides of the journals. Although the oil was only supplied to the pads by capillary action, and the journals were only just oily to the touch, they carried loads of from 550 to 580 lbs. per sq. inch. The frictional resistance was also exceedingly small.

Bath or "Perfect" Lubrication.—When the lower side of the journal dips into a bath of the lubricant, the surface is covered by a thick film of oil which is carried against the "on" side of the brass. Under such conditions the lubrication is said to be "perfect." With this form of lubrication a journal has carried, without difficulty, as much as 620 lbs. per sq. inch.

The extent to which friction depends upon the completeness with which the exposed portion of the journal is kept wetted with the lubricant is shown in Table XXXVII., p. 117.

It is clear from these figures that improved methods of lubrication not only enable us to increase the loads on our bearings, but also to greatly decrease their frictional resistances.

The oil-bath, it appears, represents the most perfect method of self-lubrication possible, and carries us to the limit beyond which friction cannot be reduced except by mechanical methods of oil-supply. The experiments show that with speeds of from 100 to 200 feet per minute, by properly proportioning the bearing surface to the load, it is possible to reduce the frictional resistance so much that the coefficient is as low as 0·001. A coefficient of friction of 0·002 is easily obtained, and probably is often attained in engine bearings in which the direction of the force is rapidly alternating.

In the design of bearings of all kinds, the object aimed at is to secure the conditions of bath lubrication; when even these conditions will not suffice, owing to the heavy load on the bearing, other means have to be adopted.

Force-Pump Lubrication.—When, owing to the loads being exceedingly great, or the speeds low, a pressure film cannot be retained automatically in the ordinary way, the best plan is to force the oil between the faces by means of a pump actuated either by the motion of the shaft itself, or by hand. Of late years this method has been adopted in quite a number of instances.

Daniel Adamson states that, in one instance, a heavy shaft which gave a pressure of 2200 lbs. per sq. inch was kept running for years in this way without any difficulty whatever, the oil being pumped in by hand occasionally.

Forced lubrication should also be used for high-speed motor bearings, when they are not easily oiled otherwise and the heat produced by friction cannot be carried away rapidly enough by the metallic parts and by radiation. It should also be used where the bearing is a very close fit to the journal and practically encloses it.

Lasche's experiments show that the heat carried away by the oil supplied to a bearing is not in direct proportion to the quantity of oil, but that a small quantity of oil properly conducted between the friction surfaces and caused to circulate between them for a sufficient time to acquire a temperature approaching that of the bushes is more efficient than a larger quantity wastefully applied. In forced lubrication, the oil should be applied to that part of a bearing where the frictional work or the surface pressure is greatest.

Michell's Automatic Lubricating Gear. When heavily loaded machines have to be frequently stopped or started, complications arise, owing to the fact that at such times there is no pressure oil-film, and the frictional resistance is high. The failure of automatic lubrication at the moment of stopping and starting involves not only greatly increased friction at those times, but wear of the surfaces, which ultimately destroys the self-lubricating property. It is not uncommon with various types of heavy electrical machines for special means to be provided to overcome the bearing resistances at starting, especially when the electrical characteristics are such that the starting torque is insufficient to overcome the friction of the adsorbed films on the rubbing surfaces. A new type of apparatus has been developed by Michell[1] for the lubrication of bearings, by storing in an accumulator sufficient oil to separate the bearings at starting. When the machine is running, a pipe carries oil from the centre of one of the bearings to an accumulator of the intensifying pattern, and fully charges it. When fully charged, a pawl engages a detent nut and prevents the accumulator from discharging when the machine stops. When the machine is started the pawl is freed, oil passes from the accumulator to the bearing, a pressure film is formed, and the machine starts freely, the friction being only about $\frac{1}{15}$ of what it would be without the assistance of the accumulator.

Heating of Lubricating Films. In Chapter III., p. 49, it was pointed out that the work done in keeping surfaces in relative motion is transformed into heat, and that the heat produced is exactly proportional to the work done. When the surfaces are separated by an oil-film, the frictional resistance is wholly viscous, and the heat produced raises the temperature of the lubricant. This increase in temperature may be very considerable, for the film is very thin, a bad conductor of heat, and the motion of the lubricating fluid is direct. The heat produced goes, therefore, to increase the temperature of a very small volume of oil, from which, as the flow is not sinuous, the heat escapes but slowly by conduction. Osborne Reynolds calculated that even when the heating of the journal is very small indeed, and the coefficient of friction low, the temperature of the oil-film may be as much as 15° F. above that of the surrounding solid parts. In this way the fact that the friction of a journal is not proportional to the speed is explained, for the heat produced in the lubricating film decreases its viscosity.

The increase of friction with increasing speed is least marked when the lubricant is a mineral oil whose viscosity decreases rapidly with increase of temperature. W. D. Scott-Moncrieff states that in some experiments made

---

[1] *Engineering*, 23rd November 1917.

by Napier and himself, it was found that the friction increased with an increase of velocity in the case of vegetable oils, but decreased with increasing speed with mineral oil.

When the lubrication is "imperfect," the loss of viscosity resulting from the heat liberated is not sufficiently great to compensate for the resulting thinner film and increased solid friction, and the frictional resistance is, therefore, greater.

The thermal units generated in a bearing per minute are expressed by the formula:—

$$\frac{P\mu_1 v}{779},$$

P being the load on the bearing, μ_1 the coefficient of friction, and v the surface velocity.

The heat thus developed in the film has to be conducted through the shaft and bearing. But the quantity of heat liberated may be so great, and the lubricant, consequently, become so fluid, that it is incapable of sustaining the load, and the rubbing surfaces, therefore, close together and may seize.

Tower's experiments clearly bring out the fact, as also do those of Goodman, that the greater the viscosity of the lubricant, the greater the load a bearing will carry, provided the speed be not too high. The seizing, when the loads are considerable, owing to the reduced viscosity brought about by increase of temperature, is somewhat more pronounced when mineral oils are used than it is with vegetable and animal lubricants, for, as previously stated, the viscosity of the latter oils do not fall off so rapidly with rise of temperature as is the case with the former. On this account mineral oils which have, at ordinary temperatures, much greater viscosity than fatty oils, can be often used without entailing increased friction.

Admissible Loads on Bearings.—The conditions which determine the area for a bearing necessary to secure cool running are very complex, and render it difficult, if not impossible, to give even an empirical rule whereby it may be calculated. Roughly, we may take it that friction always results either from the actual contact of solids or from the viscous or plastic resistance of the lubricant. When the speeds are low and the loads heavy, the more oily or greasy the lubricant, and the smaller the tendency of the surfaces in contact to gall and seize each other, the smaller the contact area may be. The lubrication of a bearing is generally so imperfect with siphon lubrication, that even up to speeds of 100 feet per minute the frictional resistance is often many times greater than that obtained with bath lubrication. At moderate or high speeds it is the viscosity of the oil which keeps the surfaces apart, for wear makes the radius of the brass somewhat larger than that of the shaft or journal, and the lubricant is trapped between them. The thickness of the film of oil is then dependent upon the form of bearing surface produced by wear, and this varies according to the conditions of running and the direction in which the load acts.

With each change of load or viscosity the relative positions of the brass and journal are also altered. With light loads, or viscous lubricants, fig. 203 shows the conditions obtaining, whilst with heavy loads, or thin oils, the relative positions of brass and journal are more nearly as in fig. 204. Increasing the load has the effect of bringing the surfaces nearer together on the "off" side, and causing them to part on the "on" side. On this account, although experiment has shown that within wide limits the friction of a journal, and therefore the heating effect, is independent of the load, the local heating with great pressures is greater than with small ones, although the total heat produced is, in both cases, the same. For where the film is thin, excessive heating takes place, the rate of shear being great, and, more especially when mineral oils are used, the lubricant becomes less viscous, and, when the loads are too great, allows the surfaces to actually touch and abrade each other. It will be seen that increasing the viscosity of the lubricant beyond a certain point, although it may prevent actual abrasion, does not result in decreased friction, because although the tendency is to make the film more even in thickness and prevent the surfaces from touching, more heat is liberated by the increased fluid friction of the thicker oil.

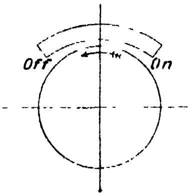

Fig. 203.

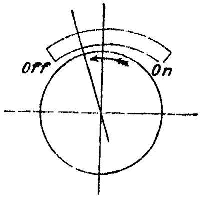

Fig. 204.

The conditions, therefore, which determine the area necessary to be given to a bearing surface are, in some measure, those which arise from the heating of the film and the nature of the metals in contact. When working under normal conditions, the thickness of the lubricating film should be so great that the friction and heating cannot injure either the lubricant or the metallic surfaces; but, as it is impossible with many forms of oil supply to guarantee a proper and perfectly regular rate of feed, and also wholly to prevent the access of grit, etc., the bearing must be made large enough to carry the load, should the supply of oil be slightly insufficient.

However small the frictional resistance may be, the heat liberated must be allowed to escape from the journal and brass as quickly as possible, otherwise it will accumulate and so increase the temperature of the parts as to destroy the bearing. But, in practice, so many large masses of metal are necessarily in contact with the lubricating film, and they expose such a large surface to the air, that in the majority of cases the brasses and surfaces in contact with them, including the lubricating film, are not excessively heated, and the latter does not lose its load-carrying power to a serious extent. In the case of connecting-rods and railway axle-boxes, the rapid movement through the air quickly dissipates the heat and enables comparatively heavy loads to be put upon them, even when the speeds are high.

Experimenting with a bearing the loads upon which could be varied easily, H. F. Moore [1] found that the maximum load per sq. inch that could be carried before the oil-film began to break down (indicated by a voltmeter in circuit between the bearing and the journal) was very closely indicated by the following formula :—

$$p = 7{\cdot}47\sqrt{v},$$

in which

p = pounds per sq. inch, and
v = feet per minute.

This was with bath lubrication and ordinary machine oil. With such a bearing Beauchamp Tower found that the frictional resistance was independent of the load and proportional to the square root of the speed. It, therefore, appears that although the additional wedging action of the lubricating film,

---

[1] *American Machinist*, 24th September 1903, p. 1351.

due to the increased speed, is incapable of further separating the journal and bearing, and thereby decreasing the friction, the wedging action is capable of sustaining an additional load proportional to the increased frictional resistance produced.

Although most writers on lubrication are of opinion that the area it is necessary to give the opposing surfaces of a bearing depends, in great measure, upon the heating effect resulting from the friction of the rubbing surfaces, it is admitted that a satisfactory theory cannot be based upon this consideration alone, for the sustaining power of a bearing is often increased by using a more viscous lubricant, notwithstanding the increased friction and heating the change gives rise to.

If we assume that severe heating occurs only when, owing to a deficiency in the supply of lubricant, the coefficient of friction becomes independent of the load, the results obtained by some formulæ are in agreement, to some extent, with practice ; but it is certain that many bearings would heat and seize long before the lubrication became anything like so imperfect as to bring this about. However, equations based on the assumption that the area of the rubbing surfaces through which the heat is dissipated should be proportional to the heat developed by friction, give some results which deserve attention.

With load W, revolutions N, radius of journal r_0, and coefficient of friction μ_1, the heat liberated by friction

$$=\frac{2\pi r_0 \mathrm{WN}\mu_1}{\mathrm{J}} \quad . \quad . \quad . \quad . \quad . \quad (1)$$

When the bearing completely surrounds the journal or shaft, the area of the surface through which the heat can escape from the film$=4\pi r_0 b$ (2) ; one-half being the area of the brass and one-half that of the journal.

The brasses of modern journals and shafts are, however, seldom made to touch the surface which works against them over more than one-fifth or even one-tenth of the circumference. Making a the length of the brass in the direction of motion, and b its width, the area of the surface through which the heat can escape$=ab+2\pi r_0 b$.

If H be the number of units of heat dissipated per unit of area in unit of time, then

$$\mathrm{H}(ab+2\pi r_0 b)=\frac{\mathrm{WN}\mu_1 2\pi r_0}{\mathrm{J}} \quad . \quad . \quad . \quad . \quad . \quad . \quad (3)$$

and

$$b=\frac{\mathrm{WN}\mu_1 2\pi r_0}{\mathrm{HJ}(a+2\pi r_0)} \quad . \quad . \quad . \quad . \quad . \quad . \quad (4)$$

Writing $p=\frac{\mathrm{W}}{ab}$ we get

$$p=\frac{\mathrm{HJ}(a+2\pi r_0)}{\mathrm{N}\mu_1 a 2\pi r_0} \quad . \quad . \quad . \quad . \quad . \quad . \quad (5)$$

This implies that the limiting intensity of pressure varies inversely as $\mathrm{N}\mu_1$, and may be greater the greater the length b is made as compared with a, other conditions being the same. It is partly on this account that the bearing brasses of railway vehicles are made long and narrow. The small load-sustaining capacity of pivot and collar bearings is also partly to be ascribed to the smallness of their heat-dissipating, as compared with their heat-producing surfaces. Slipper blocks and worm wheels are better off in this respect, and will run satisfactorily at much higher speeds.

As no really satisfactory method of calculating the area that should be given to bearings of different kinds has been devised, we give, in the first part of Table CLIX. the loads per sq. inch which are generally considered safe to use. This table will serve to show how greatly the admissible load varies in different cases, and may be used with confidence if due allowance be made for cases in which speed is excessive. The figures for ordinary bearings for shafting in the second part of the table are given on the authority of G. F. Charnock.[1]

TABLE CLIX.—ADMISSIBLE LOADS ON BEARINGS.

Description of Bearing.	Load in lbs. per square inch.
Hard steel bearings on which the load is intermittent, such as the crank pins of shearing machines, and wrist pins,	3000–4000
Crank pins of heavy locomotives, at starting,	2560
Crank pins of heavy locomotives, at 60 miles per hour,	1700
Bronze cross-head neck journals,	1200
Crank pins of large slow engines,	800 900
Crank pins of marine engines,	400–500
Main crank-shaft bearings, slow marine,	600
Main crank-shaft bearings, fast marine,	400
Railway coach journals,	300–400
Fly-wheel shaft journals,	150–200
Small engine crank pins,	150–200
Small slide blocks, marine engines,	100
Stationary engine slide block,	25–125
Stationary engine slide block, usually,	30–60
Propeller thrust bearings,	50–70
Shafts in cast-iron steps, high speed,	15
Ordinary bearings for shafting:—	
Wrought iron on cast iron,	250
Wrought iron on gun-metal,	300
Mild steel on cast iron,	300
Mild steel on gun-metal,	370
Mild steel on white-metal,	500
Cast steel on gun-metal,	600

Nicholson[2] has devised a method of calculating the *minimum* permissible loads on ordinary journals. Fig. 205 is a diagram constructed by him, giving the pressures per sq. inch that may be allowed for different rates of rotation and diameters of shaft. Thus a journal 2 inches in diameter running at a speed of 100 revolutions will carry 150 lbs. per sq. inch. He shows that the carrying capacity per sq. inch increases with increasing speed of revolution and diameter of journal.

In the case of plane surfaces, the conditions which determine the frictional resistances are by no means so uniform as those which determine the friction of cylindrical bearings. Indeed, the relative positions of the moving surfaces, even in the case of pivots and collars, vary with the direction in which the load acts, and the sustaining power of the film is thereby greatly affected. But, even when the conditions are most favourable. the load they will carry, except at low speeds, is only 60 or 70 lbs. per sq. inch, and even with such loads the rate of wear depends largely upon the nature of the rubbing surfaces and the quality of the lubricant.

Fit of Bearings. *Bedding of Brasses.*—Wherever possible, some end-play

---

[1] *Lectures given before the Bradford Engineering Society*, 1905. Published by the Society.

[2] Paper read before the Manchester Association of Engineers, November 1907.

should be given to the bearing by making it rather shorter than the neck of the journal or spindle. The faces are then free to move over each other in a direction at right angles to the circumference, and grooving and uneven wear are thereby prevented. In nearly all cases where an attempt has been made to prevent this lateral motion of the brass by making the journal smaller in the centre than at the ends, the device has had to be abandoned, circumferential grooves having been produced, and the proper formation of the oil-pressure film prevented.

When the brass is semicircular, the whole of its surface should not be allowed to come into contact with the journal. The metal should be cut away somewhat at the sides, so that the bearing area subtends an arc of 45°, or less, on each side of the line along which the load acts. This enables the lubricant to get with greater ease to that portion of the surface which has to carry the load.

Light brasses are particularly to be avoided. Not only do they leave little margin for wear, but they are apt to become distorted or fractured through the crown, just where the maximum load is carried, and where the oil-pressure film forms. When such a fracture exists, the oil escapes through it, and the carrying power of the bearing is greatly reduced. The load also pinches in the sides somewhat and destroys, for a time at least, that difference between the radius of the brass and the journal upon which efficient lubrication depends.

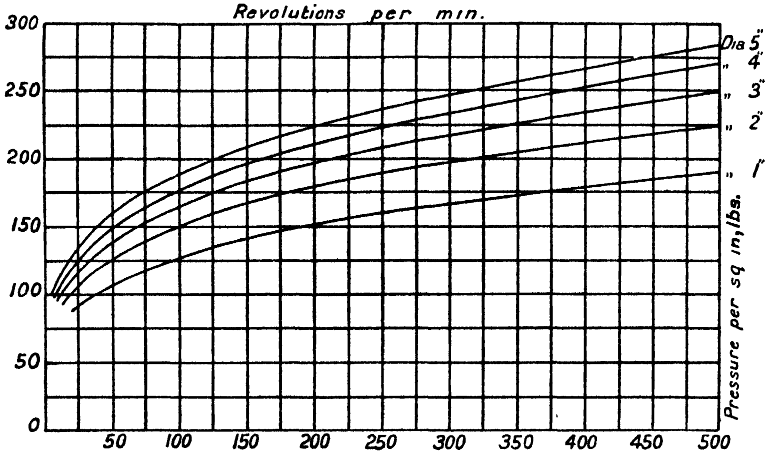

FIG. 205.

The harder the surfaces in contact, the more accurately should they fit one another, for it is not until the faces are everywhere brought by wear to within less than a thousandth of an inch of each other that good lubrication can be secured. White metals, on the other hand, are easily worked to a reasonable fit by hand, and soon wear to a perfect face.

In the case of shafts and spindles the fit should never be a tight one; enough clearance must be left for an oil-film of sufficient thickness. Some engine-makers leave a clearance of 0·001 inch for each 1 inch diameter of shaft, when the diameter is not less than 1 inch or greater than 6 inches. With this clearance, the bearings will not run hot when new, and soon wear to that condition which gives the best results.

To obviate the evil effects of strains resulting from the stresses machines have to bear, long bearings should be so made as to have freedom to move with the shaft as it deflects, otherwise the pressures are apt to become excessive at the ends.

Even when the workmanship is good, it is well to run the machine in the first instance at a moderate speed and load. This enables the bearing surfaces to bed themselves together properly and assume those curves which are the natural working ones.

Workmanship.—Owing to a want of accuracy in the fit of lathe spindles, the spring of the centres when heavy and badly balanced work is being turned up, and distortion due to want of proper annealing, it frequently happens that crank-shafts, etc., are made, the bearing surfaces of which are not truly cylindrical or not in proper alignment. Except in rare cases, this want of trueness is sure to cause hot bearings and give endless trouble. Indeed, however well a machine may be designed, if the parts be not accurately machined and properly put together, so that the contact surfaces shall slide or rotate accurately in their bearings, not only will there be undue friction and wear, but excessive strains will be thrown on portions of the machinery, and numerous failures from overheating will be the result.

To obtain anything like the efficiency and output which a machine, such as a steam-engine, may be expected to give, good workmanship is absolutely essential, for want of accuracy of fit, and defective lining up, throw upon certain portions of the engine loads which the draughtsman never calculated they would have to bear, and the effects of which the engineman finds it impossible to counteract. This does not give the machine a chance of getting into that condition in which the friction is almost wholly due to the viscosity of the lubricant, and only slightly due to the actual contact of the adsorbed films.

Burnishing the Surfaces.—Adsorbed lubricating films are very thin, and should rest upon non-porous true surfaces. To bring them into this condition as quickly as possible, and render it unnecessary to nurse them for long before being put into regular work, the surfaces are sometimes burnished. After the bearings have been turned and polished, burnishing rolls are pressed firmly against the surface of the journal, or other part, and produce an excellent surface. When the material used is wrought iron, steel, or even brass or bronze, the compression of the metal causes it to flow under the burnisher and fill up all pores and hollows. Such a hard, bright, even surface will wear much better than one which has been merely annealed and then machined.

Protection of Bearing Surfaces.—In a well-designed and properly lubricated bearing, both the adsorbed film and the viscous film prevent the metallic surfaces from actually touching, provided the load be not too great. Under such conditions, there is no wear if the lubricant be quite free from gritty matter. On this account it is now the practice to carefully protect the surfaces from dust and dirt, and to strain through some fine material all oil used. Indeed all kinds of bearings, whether ball, roller, or plain, are designed to prevent the access of grit. In some instances the whole of the moving parts are enclosed in a dust-proof chamber, and all the parts are bathed in oil. Even quite large engines are treated in this way, the cranks, slide blocks, pistons, valve gear, etc., being enclosed in an oil-tight chamber, access being obtained through a door which is always closed when the engine is running.

Chain and spur gear especially should be well protected. This is always done now with the motors, gear-boxes, and hubs of motor cars and motor cycles. In the case of ball bearings and roller bearings such protection is essential. Cycles have all such parts made as dirt- and dust-proof as possible.

Bearings, such as axle-boxes for railway vehicles, are also made dust-proof, for now that oils which will not seriously gum or become acid can be obtained, lubricants may be used over and over again, provided they are kept free from dust and dirt.

Individual bearings are often provided with dust rings of felt fitted in the housings and grasping the bearings, and all oil fed to them has to pass through filters before it can reach the rubbing surfaces. Motor-car engines are generally provided with circulating pumps which pass the chamber oil through filters and thus keep it clean.

There are numerous instances in which rubbing surfaces cannot easily be protected from air, water. dust, etc., and in which the lubrication cannot but be imperfect. As a rule, when this is the case, neither of the surfaces is made of a soft material, as grit, etc., may become embedded in the surfaces of the metal and act as cutting tools. Various hard substances are brought into requisition for such purposes; for the load to be carried, the speed of rubbing, and the presence or absence of jars or knocks have all to be taken into account when selecting a suitable material. In some cases toughness as well as hardness is of importance, whilst in other cases a hard but comparatively brittle material will give the best results.

Cylindrical Bearings. *Bush Bearings.*—Light axles, spindles, etc., are usually supported by bearings which completely surround their rubbing surfaces. Such bearings are either plain bushes threaded over the spindle, or are composed of two portions which form an upper and a lower brass. As the weight is on the bottom brass, the lubricant is supplied through an oil-hole drilled in the top cap, and is spread over the bearing by a longitudinal groove. When the shaft is a moderately good and tight fit, the results obtained by this simple form of bearing are excellent, for, as will be seen from fig. 206 (which is not drawn to scale), the annular space between the shaft and bush will, if the gap be not too large, be maintained full of oil by capillary forces, and the conditions of working will approach those of bath lubrication.

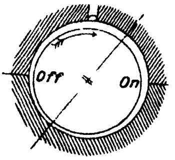

FIG. 206.

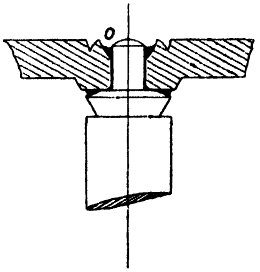

FIG. 207.

When the load is considerable, the oil-film becomes thin at the point of nearest approach on the " off " side. the lubricant escapes at the ends, does not properly fill the gap between the upper brass and the journal, and the lubrication becomes imperfect. The increase of friction thus brought about may be seen when the upper brasses of the main spindle-bearing of a foot lathe are removed. The friction will then be found to have increased greatly, for the oil fails to properly reach the " on " side, and the bearing surfaces approach each other somewhat closely.

Watch and Clock Bearings.[1]—As bearings of this kind often have to run for years without attention, they should be constructed so as to retain, by the action of capillary forces, a small amount of oil. The bearing of a watch or

---

[1] *Friction, Lubrication, and Lubricants in Horology*, by W. T. Lewis, pp. 43–59.

clock pivot is shown in fig. 207. The oil sink *o* is deep and narrow, and holds a considerable charge of oil, which is prevented from spreading by the sharp angle formed by the edge of the surrounding groove. A portion of the shoulder is also bevelled to form a narrow recess in which oil can be stored. The back taper on the spindle below the collar, and also the boss on the plate, are to prevent, as much as possible, the oil from spreading.

Means for retaining a supply of oil are also provided when the pivots run in capped jewels. Such a bearing is shown in fig. 208. Here the charge of oil is retained by capillary forces between the two jewels, which approach each other closely. One of these is perforated for the pivot, and the other is flattened to steady it laterally.

Lathe Bearings. The main bearings of lathes have to be an exact fit, otherwise it would be impossible to turn out accurate work; for the thickness of lubricating films is of the same order of magnitude as the degree of accuracy required for the work to be done. Such bearings are supplied with numerous large oil grooves by which the oil is able to reach all parts of the bearing surfaces. To enable accurate adjustments to be made in the fit, the main bearings of small lathes are often conical in shape, and means are provided for securing the shafts in the required portion longitudinally, the thrust being taken by a conical centre. Owing to the close fit, the friction is rather high In the case of large lathes, parallel bearings are used, with collar-thrust bearings for the end pressure.

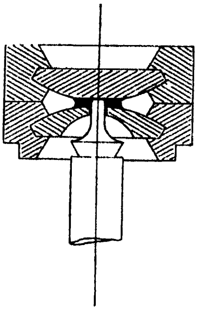

FIG. 208.

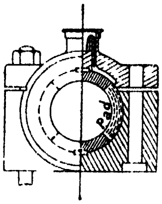

FIG. 209.

Pedestals.—The bearings or steps used for the support of shafts of any size are, as a rule, loose pieces of metal held in position by iron pedestals or housings. When the load to be carried is very great, the pedestal is placed upon a sole-plate, which serves to distribute the load over a sufficiently large area of masonry. It also serves as a means of adjustment. In some cases, however, separate bearing pieces are dispensed with; the step then becomes a portion of the pedestal. When this is the case, to enable any wear to be taken up, and also to facilitate the removal and fixing of the shaft, the pedestal is fitted with a cap secured in position by bolts and projections. By reducing the thickness of the packing pieces, which are placed between the cap and the pedestal, any slackness resulting from vertical wear can be taken up. Such a simple design is only suitable in cases where the speed and load are small. At one time the lubricant was nearly always supplied through a hole in the centre of the cap, and distributed along the surface of the shaft by two grooves which extended to within a short distance from the edges of the bearing.

The difference between the diameter of the shaft and that of its bearing being very small, the lubricant, even if a liquid one, remains between the surfaces in virtue of the play of surface forces. For line shafting and the main bearings of engines, upon which the load is often very considerable, the pedestals are always so designed that bearings or steps can be replaced with new ones when much worn.

Even now many very primitive designs are in use, which not only cause needless waste of oil, but also of power, for the friction coefficient is much larger than it should be. The shaft, in the cases alluded to, runs upon a bronze bearing, and to prevent the lubricant running off at the sides and being wasted, the latter is only supplied in small quantities. The proper lubricating pad or film is consequently unable to form, and the faces are always, to some extent, abrading each other. On this account, pure mineral oils deficient in greasiness give but poor results when used for such bearings.

An improved pedestal, shown in fig. 209, is now being very extensively used. Only a short arc of the cap and brass are in contact, or nearly so, with the shaft, the spaces at the sides being occupied by felt pads kept moistened with oil from a siphon lubricator. With this arrangement, the frictional losses are comparatively small. Better bearings even than these are now being brought into use. They are so contrived that the lubricant is thrown over the shaft in a continuous stream, forms a thick lubricating film, and is again returned to the bearing after passing into a reservoir below. Under these conditions the lubrication is perfect, *i.e.* viscosity has free play, and mineral oils, with a slight admixture of fatty oils or fatty acid (see "Germ Process" oils, p. 289), answer admirably, if the surfaces be of the proper materials.

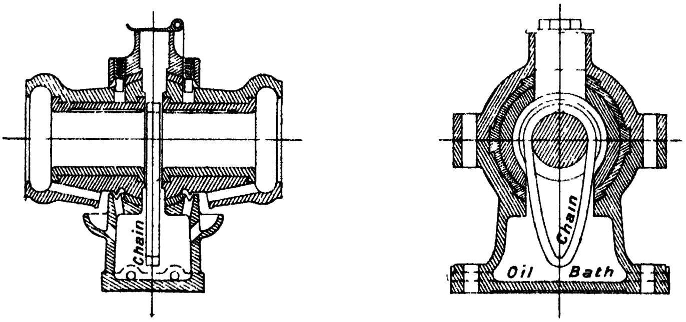

FIG. 210.

In such bearings the lubricant is in continuous circulation, the same charge often lasting for nearly twelve months.

Fig. 210 shows such a bearing, made by the Brush Engineering Co., Ltd., Loughborough. Here the pedestal forms an oil reservoir from which the lubricant is raised by means of an endless chain slung upon the shaft, by which it is kept in motion. The lower part of the chain dips into the oil-bath and carries up with it a thick film of oil, which is distributed over the top of the shaft through the longitudinal oilways. To prevent the oil being thrown about and thus wasted when it is expressed at the ends of the bearing, splashers are cast at the ends of the pedestals, to collect and return the oil to the reservoir.

Some care is necessary in selecting the material of which to make the oil-lifting chains, for the lubricant is apt to become somewhat acid with age. Iron, steel, or brass, used alone, work well, but on no account should two varieties of brass or steel be used together, one for the pins and another for the links, as they set up electro-chemical action, which destroys them.

In this design the bearing is a long one, suitable for a high-speed dynamo or motor shaft. The brasses and their cast-iron supports are held in position by a ball-and-socket arrangement, which allows them perfect freedom to adjust themselves so as not, under any conditions, to throw awkward strains upon the brasses.

A self-adjusting bearing which has some good features has been designed by G. F. Thompson. The construction of the bearing is shown in fig 211.

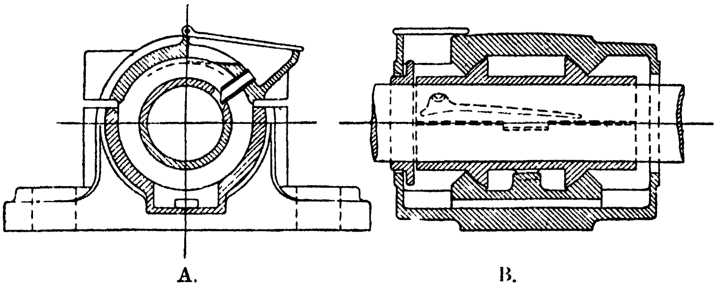

FIG. 211

A and B. The step, as will be seen, is supported on ring-shaped bearings or collars which are turned so that the surfaces by which they rest on the plummer-blocks are portions of a sphere. The lubrication is effected by an oiling collar, revolving with the shaft and dipping into the oil-well below; the oil adhering to this collar is scraped off, as the latter revolves, by a spring scraper at the top, and flows thence into an upper oil-well, from which it passes by oilways to the journal.

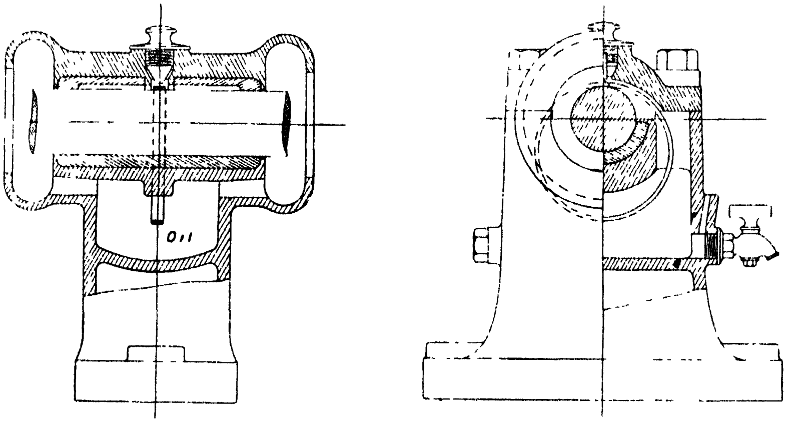

FIG. 212.

In the bearing made by Thomas Parker, Ltd., Wolverhampton, shown in fig. 212, the oil is lifted from the reservoir by means of a loose ring threaded on to the shaft. In other cases a loose collar takes the place of the chain or ring, whilst some makers of bearings place a felt pad along the top of the upper brass, to act as a strainer for the oil. The pedestal casting in such cases forms a splasher projecting beyond the bearing, and serves to collect the oil thrown out at the ends and return it to the reservoir. When the speed is very great, the oil is liable to be thrown off the ring or collar, instead of reaching the bearing.

Lasche points out that ring lubrication for high-speed motor bearings should only be used when the heat produced by the friction can be sufficiently carried away by the metallic parts and by radiation or water cooling. In other cases, forced lubrication (see p. 521) should be employed.

When the shaft is heavy, it is well to make the lower brass rest in a cylindrical seating concentric with the shaft, and to prevent it from rotating by suitably shaping the bearing surfaces of the brass in the cap. This enables the lower brass to be removed by merely turning it round when the shaft has been lifted only a fraction of an inch.

In some instances, the direction in which the load acts is not by any means a vertical one, owing to the strain of a belt or some other lateral force. The dividing line between the brasses should then be at right angles to the direction of the resultant pressure on the journal, and, therefore, not horizontal.

The practice of making the brasses in three or more pieces is sometimes resorted to, as it enables the wear to be taken up without removing the bearing pieces. In many cases, however, the division between the separate pieces allows the lubricant to escape just where the maximum pressure of the supporting film should be, whilst in all such cases the sustaining power is reduced and the friction coefficient increased. When there is only one brass, the shaft can move into that position which has been shown to give the lowest coefficient of friction; but when the bearing consists of two or more separate pieces of metal, each bearing piece must be free to move somewhat and adjust itself so as to occupy its proper position with regard to the shaft, and each "on" edge must be properly lubricated. When such adjustments cannot freely take place and the load is considerable, the bearings give a high coefficient of friction and easily run hot.

For high speeds it has been found advisable to make the bearings of large area, and cast iron is then often used, for the loads per sq. inch in such cases are small. The longer the bearings, the more necessary does it become to construct them as shown in figs. 211 and 212, so that no undue strain shall be thrown upon their ends if the shafting should be bent or somewhat out of line.

Many high-speed bearings are now not only fitted with two rings or chains slung on the axle and rotating with it so as to pick up the oil, but they have also small oil-pumps, driven by a cam on the axle, which deliver the oil on to the bearing in a constant stream. Such extreme precautions against the possibility of a failure in the proper supply of the lubricant are by no means unwarranted, for they ensure a low coefficient of friction, and almost wholly prevent wear of the bearing surfaces.

Axle-Boxes for Oil. In the case of the bearings of railway vehicles, the brass or step rests upon the journal, and the load acts vertically downwards. The journal usually projects beyond the wheel, and can be enclosed in a dust-proof box fitted with a door at the front to enable the condition of the journal to be ascertained at any moment. But on some locomotive-engine bearings the axle-box is placed inside the wheels, and cannot be designed on quite the same lines as railway-coach bearings.

Locomotive driving and trailing bearings are of bronze lined with white metal, the lubricant being supplied by siphons fixed above them. In some instances an oil reservoir is placed in the axle-box keep, and a lubricating pad fixed therein, so as to press against the underside of the axle.

The method of cutting oilways along the centre of the bearings and making them a good fit at the sides, which, in the case of driving-wheel bearings, is considered to be the best practice, is not always followed in the case of other locomotive-engine bearings, for the driving axle has to carry the thrust of the piston as well as the vertical load. The groove by, to some extent, preventing the pressure film from forming, causes the crown of the bearing to wear more rapidly than it otherwise would do, and tends to prevent the side thrust of the connecting-rod from developing side-play. The trailing-wheel bearing, on the other hand, is cut away at the sides, the arc of contact being about 90°, so as to give the oil free access from the pad to the crown of the bearing. The single groove along the crown is also sometimes replaced by oilways which enclose the area over which the pressure-film should form. Locomotive engine axle-boxes which are placed inside the wheels, and are not fitted with a door to enable the pad to be easily got at and cleaned, have auxiliary siphon lubrication appliances. Provision must be made in many cases to take the thrust due to the brake blocks by making the arc of contact of bearings and axle of sufficient width. Locomotive bearings lined with good white metal, and having an oilway across the centre of the brass, will carry 275 lbs. per sq. inch, the width of the step being calculated on an arc of about 90°.

The most satisfactory tender and bogie axle-boxes are constructed upon the lines of those used for the coaching stock, drawings of some of which will now be given.

For railway vehicles which have brake blocks on both sides of the wheel, and are, therefore, only subject to slight lateral pressure, the best practice is to make the arc of contact short, the brass long in a direction parallel with the shaft, and to supply the lubricant by means of a pad pressed against the underside of the journal This type of box was in use as early as 1879, several years before Beauchamp Tower made his experiments on friction with the pad and oil-bath.

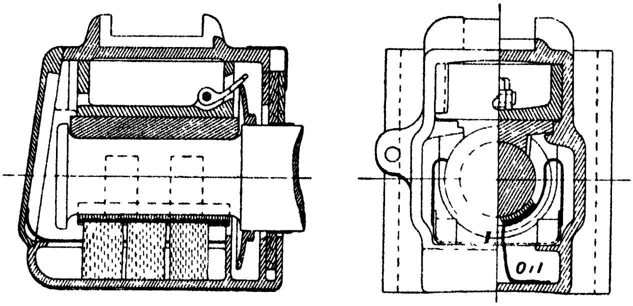

FIG. 213.

An axle-box of this kind is shown in fig. 213. Here, the lower portion of the box forms a reservoir for the oil, into which thick cotton wicks hang from the pad. The oil rises in the capillary pores and keeps the pad and journal well moistened. The brass is a loose piece which, by lifting the box a short distance from the axle, can be taken out and examined when the door at the front is open. No oil grooves or holes of any kind are cut in the face of this brass, as they would more or less prevent the pressure-film from forming properly. To prevent the oil from escaping from the box, and to keep out dust and dirt, the door is made a good fit, whilst on the inside the axle is grasped by wooden shutters sliding in grooves. All the oil expressed at the inside edge of the brass passes into the small auxiliary reservoir, and is picked up by the disc fixed to the axle and transferred to the bearing by a wiper.

Owing to the fact that these boxes are kept cool by being brought into contact with the open air, and that there is a good deal of vibration and variation in the direction and intensity of the pressure between the surfaces, the bearings can be made to carry heavier loads than can stationary bearings of similar design, running at equally high speeds.

In this country it is the custom to make the steps of bronze, and to lubricate with mixed oils. It would seem, however, that when the bronze is replaced by a suitable white metal, pure mineral oils can be used and a great saving effected in the cost of the lubricant. The customary load put upon bearings of high-speed vehicles is about 250 lbs. per sq. inch. Boxes of this description, when used for locomotives and their tenders, work most satisfactorily when the spring rests upon an independent plate interposed between it and the axle-box. This plate is so guided that the axle-box may move independently of the spring and thus prevent irregular strains being placed upon the bearing.

Grease Boxes. A fluid lubricant is nearly always used for the axle-boxes of quickly moving vehicles; for wagons, grease is sometimes preferred, the frictional resistance at starting being smaller with plastic lubricants than with fluid ones.

A grease box, Ellis' patent, such as is used on mineral wagons, is shown in fig. 214. In some respects it resembles the box used for oil, but differs from it in the important particular that the lubricant is supplied through large holes near the ends of the bearing, the melting-point of the grease being such that if the bearing becomes a little warm the grease becomes fluid, and finds its way upon the journal.

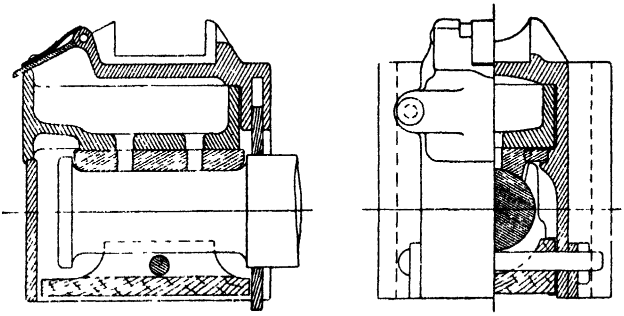

FIG. 214.

Tilston's Automatic Forced Lubricator, shown in fig. 215, is an ingenious application of pressure feed to line shafting and other bearings. A is the cast-iron bearing, B the shaft, C an eccentric keyed or screwed to the shaft, by the revolution of which the pump plunger F is reciprocated. When the plunger is at the top of its stroke, the oil in the chamber D passes through the holes G into the space beneath the plunger, and is forced thence by the return stroke past the non-return valve I and through the outlet J into the space between the shaft and bearing, whence it escapes into D or D′, to be pumped over and over again. The leather washers M M prevent the oil from travelling along the shaft and getting lost.

Self-adjusting Journal Bearings.—It has been shown that when the viscous lubricating film forms between the brass and a journal the brass occupies a slightly eccentric position, and that this position varies with every alteration of the load and speed. When a journal is grasped between two brasses, as in Thurston's Oil-Testing Machine, this eccentric position cannot be taken up by both brasses unless they are made self-adjusting. In 1899 R. M.

Deeley designed the form of bearing shown in fig. 216, and this was fitted in 1910 to the Thurston machine shown in fig. 136 on p. 435. Here it will be seen that the journal can place itself eccentrically with regard to the upper bearing, and the lower bearing can place itself eccentrically with regard to the journal. All the tests made with the Thurston machine fitted in this way gave very satisfactory results.

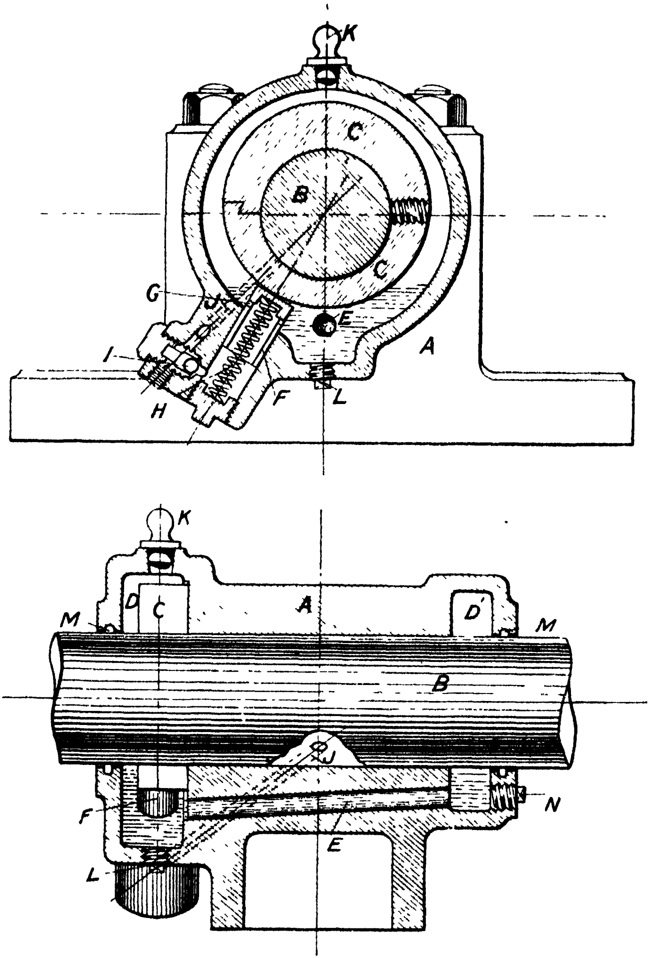

FIG. 215.—Tilston's Automatic Forced Lubricator.

Another form of bearing designed, as shown in fig. 217, was fitted to a Midland Railway Company's locomotive, and at moderate speeds worked satisfactorily, but it was found that the self-adjusting segments were not placed at a sufficiently obtuse angle with regard to each other to withstand the thrust of the piston-rod and outside rods under some conditions of working.

Michell Journal Bearings.—The twin-screw steamship *Gouverneur-General Chanzy*,[1] is notable for the fact that the whole of the main and thrust bearings

---

[1] *Engineering*, 28th July 1922.

of the propelling machinery have been constructed on the self-adjusting principle. The construction of the journal bearings is shown in fig. 218. Each bearing consists of a housing containing six blocks or pads lined with white metal. These pads take the load on the shaft, which they transmit to the housing through " line " contacts about which they are able to rock. Owing to the freedom thus afforded, the blocks take up automatically such a position with respect to the revolving shaft that a wedge-shaped film of oil forms between pad and shaft, thus ensuring lubrication under conditions which are almost ideal, both practically and theoretically. It has thus been possible to reduce the bearing area in some cases to about one-third of that usually provided. The lubricating oil is supplied under pressure and is introduced between the pads, from which it escapes at the ends in the usual way.

The effect of the reduced friction with the Michell journal bearings was very noticeable during the steam test of the turbines and gearing in the engine shop. After shutting off steam the machinery continued to run under its own momentum for 13½ minutes, whilst a somewhat similar set of machinery with ordinary journal bearings under similar conditions ran for only 9½ minutes. The bearings were designed for a maximum pressure of 550 lbs. per sq. inch of projected area and a maximum surface speed of 76·5 feet per second. In addition to making a trip to the Clyde under adverse weather conditions, the vessel successfully completed official trials of twenty-seven hours' duration. The mean temperature of the oil leaving the turbine and gearing bearings was 85° F. On opening up the bearings for inspection after the trials, they were found to be in a very excellent condition, showing a polished surface extending practically all over the pad pieces which were taking the load. The wear down of the bearings, as measured by means of bridge gauges, was found to be negligible.

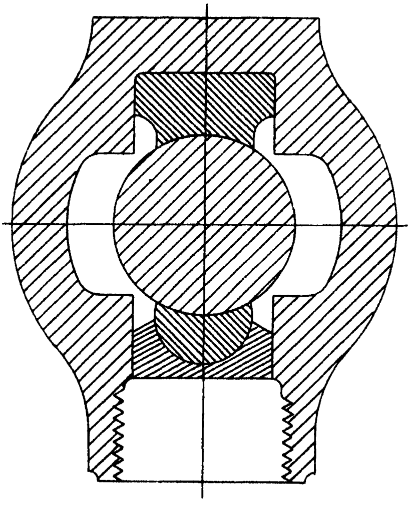

FIG. 216.

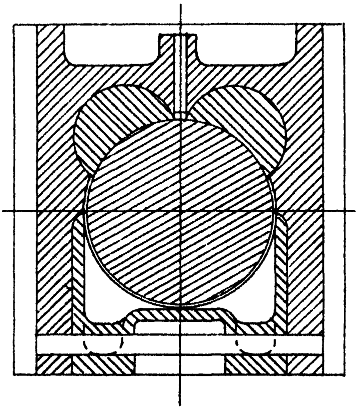

FIG. 217.

Vertical Shaft Bearings.—Bearings have often to be used for long vertical shafts. They are more for the purpose of preventing flexure than to carry heavy loads. For such purposes grease may be used as a lubricant with advantage, as it does not run out of the bearing so readily as a liquid. When power is taken from vertical shafts by spur gearing or otherwise, special bearings are sometimes used in which provision is made for keeping the oil from flowing away.

Spindle Bearings. Parsons has introduced a very ingenious bearing for shafts running at such extremely high speeds as 9000 revolutions per minute. It is impossible to balance such quick-running shafts so accurately that the centre of gyration shall coincide with the centre line of the journal. To prevent undue pressure being put upon the bearing, and also the vibration which would result from making the shaft a somewhat loose fit, the inventor threads upon the shaft—one upon the other—several bushes, the outside one of which fits the pedestal casting. Between each bush oil-films form, which, by their viscosity, damp out all vibrations. All the bushes need not be free to rotate. These bearings are often used for the shaft of Parsons' turbo-motor when the speed is high, the oil being supplied continuously to the bearing by means of a pump, which keeps up a constant circulation of oil.

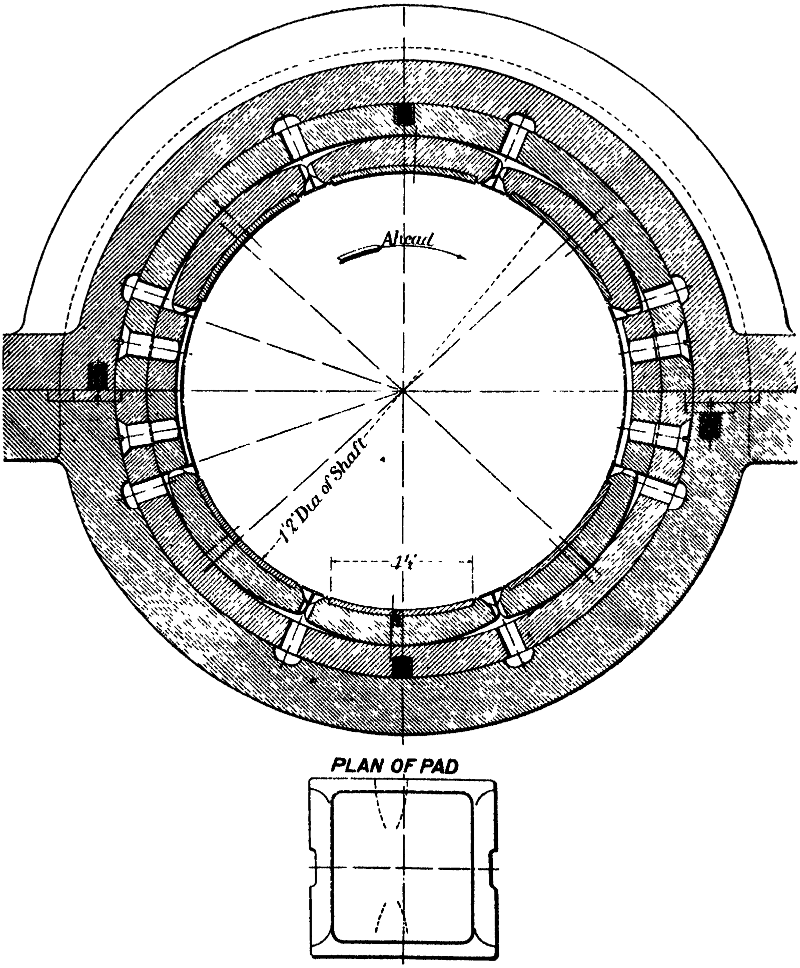

FIG. 218.

The bearing surfaces of moderately high-speed spindles are nearly always coned, so that any wear can be taken up by moving the pedestal or spindle laterally, and the surfaces upon which the spindles run are often made of white metal. The best spindles are obtained by shaping them from hard rolled bars of steel, the metal, in this state, being flexible and of very even texture.

The ring spindles used in textile mills for spinning the finer counts of cotton and silk run in a bath of thin mineral oil, which enables speeds of 10,000 revolutions per minute to be attained. Fig. 219, A, shows the construction of a ring spindle of the "flexible" type manufactured by Messrs. Platt Bros. & Co. of Oldham. The steel spindle A, to which are firmly attached the sleeve B, the cup C, which holds the bobbin, and the wharve D, which receives the driving band, rotates in a perforated tube or bolster E, in the bolster-holder H, which is fixed to the rail of the spinning-frame. The brass oil-tube K, containing sufficient oil to nearly fill it when in position, is inserted into the bolster-holder from below and secured by means of the cast-iron nut L, and a leather washer. The oil entering the tubular bolster through the perforations keeps the spindle perfectly lubricated. The detachable oil-tube enables the dirty oil to be emptied out and the tubes to be replenished with clean oil whilst the spindles are running, and without risk of soiling the yarn, bobbin, or rings. This only requires doing once every three or four months.

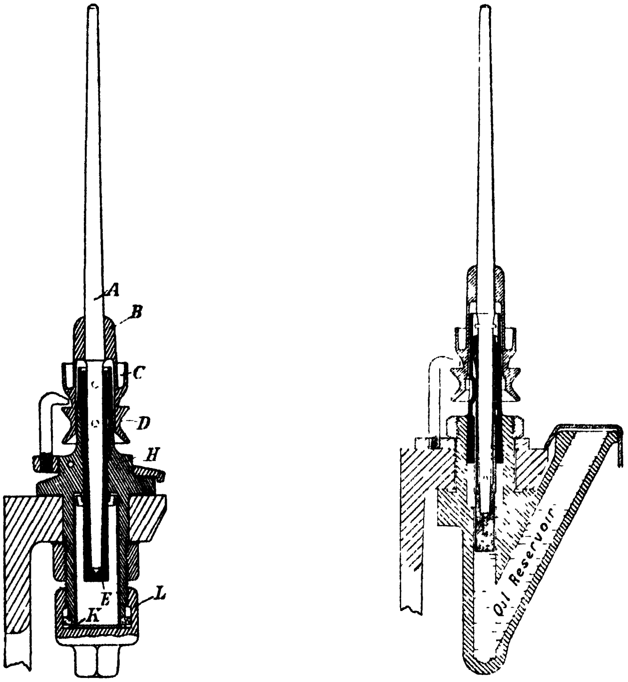

A B

Fig. 219.—Ring Spindle.

Another pattern of ring spindle, manufactured by the same firm, is shown in fig. 219, B. In this type of spindle the lubricant is supplied through a front oil spout, which also can be filled or emptied as the spindle runs.

Such high-speed spindles have to be made an easy fit in the bolster or bush, so that the oil-film shall be sufficiently thick to prevent overheating;

and as such thick films will only carry light loads, the bearings are made very long in proportion to the diameter.

Loose Pulleys.—Loose pulleys, as a rule, are merely bushed with bronze, and run upon accurately turned shafts, their lateral motion being prevented by the fixed pulley on one side and a collar on the other. Sometimes such pulleys are only supplied with a drop of oil occasionally; in other instances, they have screwed into them a small oil-cup which feeds very slowly.

Smith's self-oiling pulley is shown in fig. 220. The boss of the pulley is made of sufficient diameter to give room for a large bush, which is chambered externally, so that, when in position, it provides a large annular space for oil. The chamber is interrupted by three perforated ribs, which serve to carry the oil round when the pulley is in motion, and to stiffen the bush. From this chamber the oil, as it is carried up, passes to the bearing through a number of radial holes in the bush, being prevented from escaping at the ends by two circular grooves having oilways connecting them with the oil-chamber. The portion of the shaft upon which the pulley runs is thus regularly and automatically lubricated, and when supplied with a non-gumming, fairly neutral lubricant only needs occasional attention.

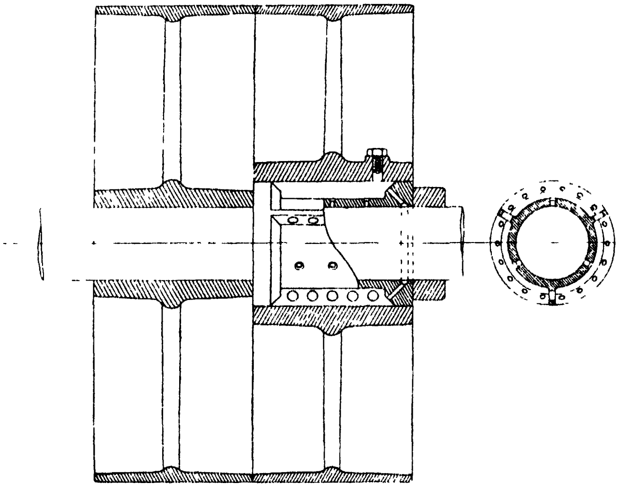

FIG. 220.

Variable Load Bearings.—Crank-pins, cross-head pins, and all bearings upon which the direction of the load is quickly reversed and the bearing surfaces thereby periodically parted, will carry extremely heavy loads. In such cases the lubricant is drawn in between the surfaces as they part, whilst the load remains on the bearing for so short a time that the oil-film is only partially pressed out. But these conditions do not at all times prevail, especially in locomotive engines, which have to start away with a heavy load behind them. The bearings upon which the iron or steel crank-pin is pressed have consequently, in such cases, to be made of very hard white metal, which will not squeeze out under the great pressure put upon it.

It must not be assumed, however, that the pressure on the crank-pin is measured by that of the steam on the piston, for, at ordinary running speeds, the inertia of the moving parts tends to equalise the pressure on the pins very considerably.

The load on a cross-head pin may be made much greater than that put on a crank-pin, the angular motion of the cross-head and, therefore, the work done upon it being much smaller.

A method of lubricating the big-ends of locomotive connecting-rods is shown in fig. 221. Such big-ends seldom run for more than two or three hours without a stop, and a large oil reservoir is not required. The oil-hole is loosely plugged with a number of worsted strands secured to a twisted wire support. Upon this plug, the lower end of which rests upon a piece of sponge occupying a recess in the brass, so as to be in contact with the crank-pin, the oil splashes as the crank moves. Another method of supplying oil to the big-end, designed by H. Jessop, is shown in fig. 222. Here a loose central valve, having a very small lift, is placed in the oil-hole. The valve, except at very low speeds, is thrown from its seat at each revolution of the wheel, and allows a small quantity of oil to pass to the bearing. Such contrivances have been found to give very good results, as they do not easily become choked with sediment or gum up.

The lubrication of the connecting-rod big-ends of high-speed stationary engines, which have to work many hours without stopping, is generally effected from a fixed reservoir which supplies oil to the bearings as they rotate. A common appliance consists of a ring-shaped channel rotating concentrically with the shaft. Oil dropped inside this ring is thrown by centrifugal force into a pipe arranged to deliver the oil to the bearing through a hole drilled in the crank-pin Another plan is to fix a knife edge above the connecting-rod lubricator, in such a position that it strikes an oily pad once during each revolution and wipes off the oil with which the pad is moistened.

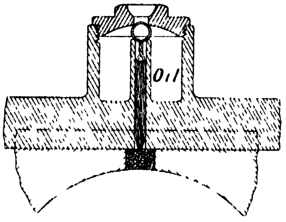

FIG. 221.

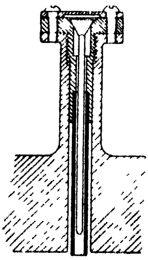

FIG. 222.

The eccentrics of steam-engines work under much the same conditions as the crank-pins. Owing, however, to their large diameter, the velocity of rubbing is greater, and they will not carry such heavy loads.

The reciprocating motion of an eccentric is generally so small, even when running, that ordinary siphon oil-cups are easily filled by hand. When, however, the speeds are great, the oil is led through pipes leading from siphon lubricators to wipers. The eccentric straps of locomotives are usually made of steel or iron lined with white metal which works upon cast-iron sheaves.

Pins with Reciprocating Motion. In many cases pins have to carry a steady load, and the surfaces only move relatively to each other through a small angle. In some instances, the load that can with safety be put upon the bearing is only small; a greasy lubricant must, therefore, be used and the surface hardened. The slow reciprocating motion of the surfaces, and the constant pressure upon them, tends to expel the oil from the faces rather than to draw it between them.' Such bearings are by far the most difficult to lubricate and keep in order, especially if every care has not been taken to make them of such metals as will work well together. If the oil be supplied by one groove running along the side opposite to that which carries the pressure, there is very little chance of its being able to spread itself over the rubbing surfaces. Two parallel grooves, one on each side of the centre line of the load, not very far apart, and arranged so that all parts of the surface shall be exposed to the oil resting in them during some portion of the motion, serve their purpose most satisfactorily.

Plane Surface Bearings.—The principal forms of bearings of this description are slide-blocks, collars, and pivots.

Slide-Blocks. When it is necessary so to constrain a moving piece, or any part of it, that the motion shall be one of translation only, straight guiding surfaces termed slides and slide-blocks are generally used. Parallel link-motions, although they give a much smaller coefficient of friction when new, are more complicated, and the effects of wear are not so easily allowed for.

The loads at which oil-pressure films can form on plane surfaces being only moderate ones, slide-blocks are generally of cast iron working upon cast iron or steel. The slide-blocks are, however, sometimes lined with gun metal or white metal when the speeds are great. In America, chilled cast-iron surfaces have been introduced. The chilling is effected in diagonal strips separated by equally broad spaces of soft metal. This gives the surfaces that degree of unevenness which enables the oil to be trapped and so keep the surfaces apart. Oilways may be cut in long slide-blocks so as to distribute the oil over the surfaces and enable it to reach the edges ; but as the latter, if properly cut, do not quite reach the edges, the oil cannot readily escape.

The loads carried by slide-blocks range from 20 to 120 lbs. per sq. inch, according to the speed and the nature of the rubbing surfaces At the lower pressures, cast iron works well upon cast iron, but when 100 lbs. per sq. inch is reached, gun metal or white metal upon hard steel must be used. When the load is light and the lubrication good, the wear is very small indeed, especially if the slide be a horizontal one and able to retain the lubricant.

Engine slides are usually made plane, but when the crank is not a fixture it is well to form the slides so that their surfaces are concentric with the centre line of the cylinder. The cross-head then has freedom to rotate with every change of angle of the crank shaft. The lubrication of slides is best effected by siphon cups or other drop-feed contrivances, placed towards the ends of the bars, where the blocks pause, or only move slowly.

As a support for piston tail-rods, Messrs. Musgrave & Sons have introduced Buckley's device, which is a sheave rotating in an oil-bath. The rod rests upon the sheave, and the load is carried by the pin upon which it rotates.

Collar-Bearings.—Collar-bearings, unlike slide-blocks, which only serve as guides for moving parts, and only have to bear intermittent loads, have, as a rule, to carry the thrust resulting from the weight of heavy shafts, or that produced by the pressure of the water on the blades of a screw. To enable them to carry the heavy weights this entails, the areas of their rubbing surfaces must be large, for, if the faces are not actually to rub against each other, and are to be separated by a viscous film, the loads per sq. inch must be small. With thrust bearings, and in cases where it is important that the efficiency should be high, bath lubrication is resorted to.

Tower's experiments on collar friction were made with very imperfect lubrication, only just sufficient oil being supplied to keep the surfaces from seizing. Under such conditions it appears that 70 or 80 lbs. per sq. inch is the utmost that can be put upon such a bearing with safety, and when the speed is great even smaller loads than these must be used.

The collars which carry the loads in drilling-machines, lathes, etc., have such heavy loads put upon them, that to prevent seizing the surfaces are made of the hardest steel, have numerous oilways cut in them, and are lubricated with good fatty oils. Small bearings with hardened faces, such as the spindles of drilling machines, where the load is taken off occasionally, have steel faces which often work under loads as high as 300 lbs. per sq. inch, and in exceptional cases as much as half a ton per sq. inch has been put on a collar for a short time.

To ensure the proper lubrication of the faces of the thrust blocks against which screw shaft collars work, thrust-block faces are cut away in such a manner that the collars are exposed in places and dip into an oil-bath, or press against an oiled pad. In this way fairly perfect lubrication is secured, provided the load per sq. inch be not greater than 70 lbs. per sq. inch. However, as the efficiency of a thrust block at the best is not high, the heat liberated is great, and the block must, when the bearing is a large one, be kept cool by a water-jacket.

Pivot-Bearings.—When the thrust to be carried acts upon a vertical shaft, instead of the load being carried on collars, the end of the shaft may rest upon a circular face or pivot-bearing. This form of bearing permits of bath lubrication, for the footstep may be so designed that it forms a vessel which can be kept full of oil.

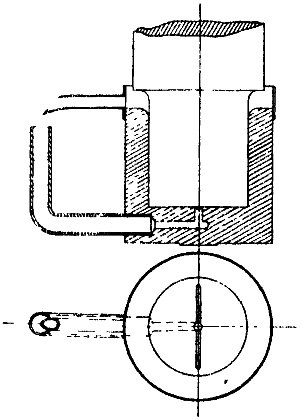

Fig. 223.

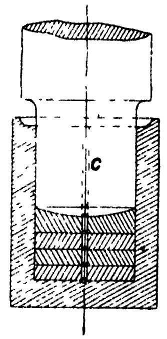

Fig. 224.

Fig. 223 shows a bearing-surface such as Tower used. The oil is admitted through the central hole and passes into two radial grooves. From these grooves the lubricant is carried between the surfaces, and is expelled by the pressure upon the pivot. The track of the oil varies at different parts of the surface, a portion being expelled at the edges. This sets up a continuous circulation of the oil from the centre of the bearing to the margin of the footstep, and up between the cylindrical portion of the bearing and surrounding bush.

The earliest reliable experiments on the friction and sustaining power of pivot-bearings are those made by Tower with this pivot. In these experiments are given the greatest loads which he found a pivot-bearing would carry without actual abrasion of the surfaces taking place. For the actual results, see p. 101.

In fig. 223 only one cross oil-groove is shown, but it is generally considered that it is better to provide several grooves, as the pressure areas keeping the surfaces apart are only in the immediate neighbourhood of the oilways.

Fig. 224 represents a footstep bearing somewhat similar to one designed by Ford Smith. Here the circulation is as shown by Tower, but the actual bearing consists of four discs of hardened steel all perfectly free to revolve with the pivot. Through the centre of all four washers an oil-hole is drilled, and radial grooves are cut in the faces The passages C enable the oil to circulate between the washers and up the side of the shaft. By using four washers five friction surfaces are formed, and the films are increased in number to the same extent

This enables the temperature of the films to be kept more nearly that of the masses of metal, and should one become a little overheated and tend to seize, the other faces move relatively faster and allow it to cool again As a means of relieving any local pressure which might result from the springing of the shaft, it has been suggested that one of the loose washers should be made convex on one face, as shown, so as to fit in a concave face on the opposing washer or pivot.

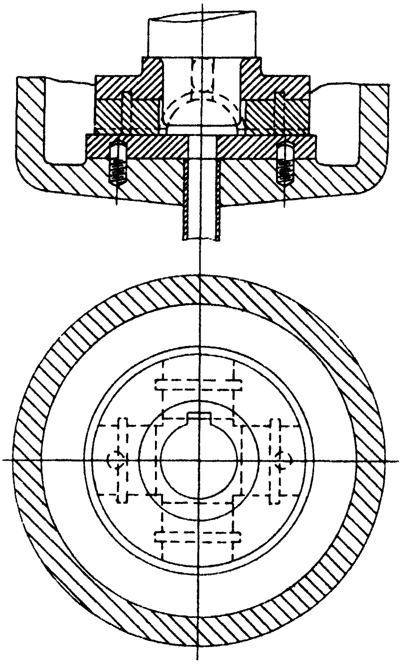

FIG. 225.

When the pressures exceed 160 lbs. per sq. inch. the surfaces must be made of hardened steel working upon a similar face, or upon dense cast iron or bronze. Should the load per sq. inch exceed 300 or 400 lbs. a force pump must be resorted to, and a continuous stream of the lubricant forced between the pivot and footstep. As much as 1 ton per sq. inch can be supported by this means without any difficulty.

Self-adjusting Thrust Bearings.—The semi-cylindrical self-adjusting journal bearing illustrated in fig. 216 on p. 537, which was fitted to the journal of the oil-testing machine in the chemical laboratory of the Midland Railway Company in 1900, was also applied to a hydro-extractor in the Derby locomotive shops of the Midland Railway Company by R. M. Deeley. The design is shown in fig. 225. Here the thrust bearing consists of four semi-cylindrical blocks

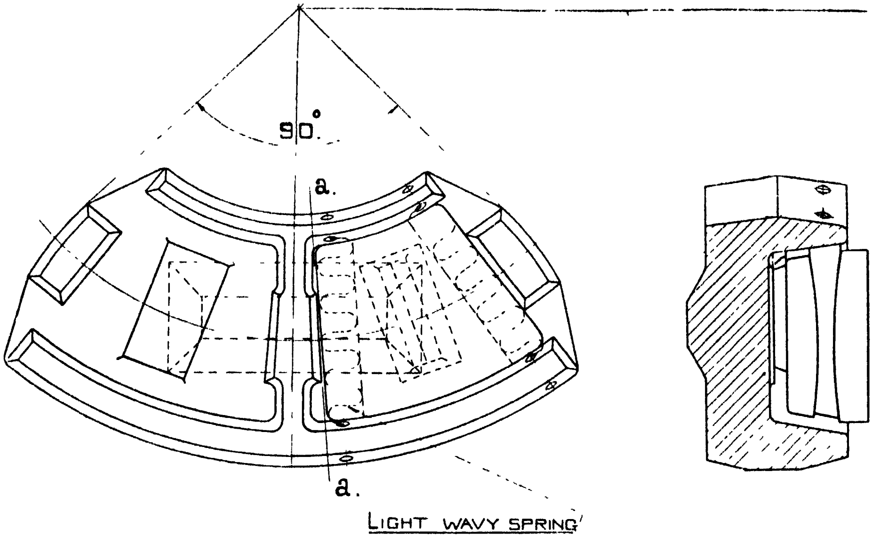

FIG. 226.

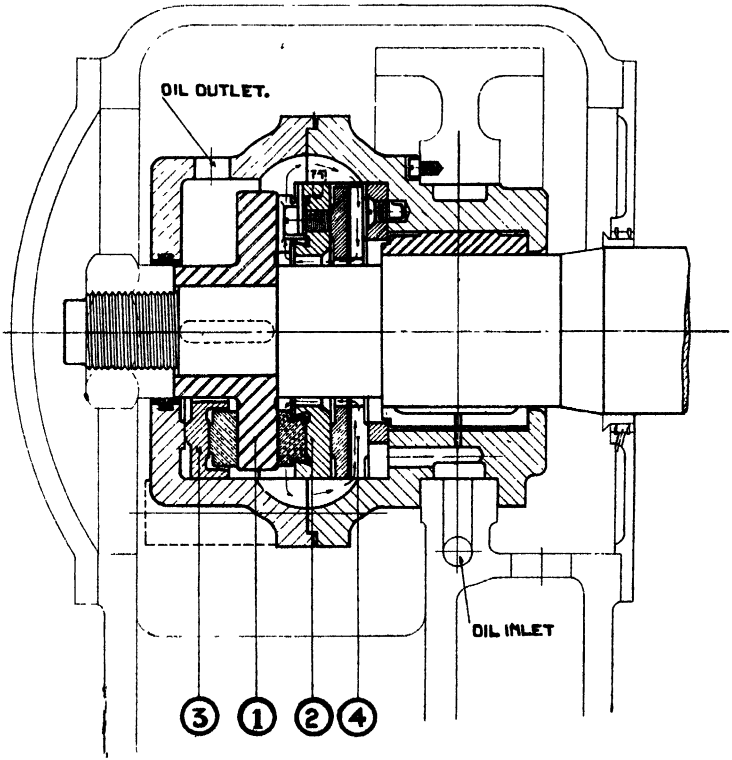

FIG. 227.

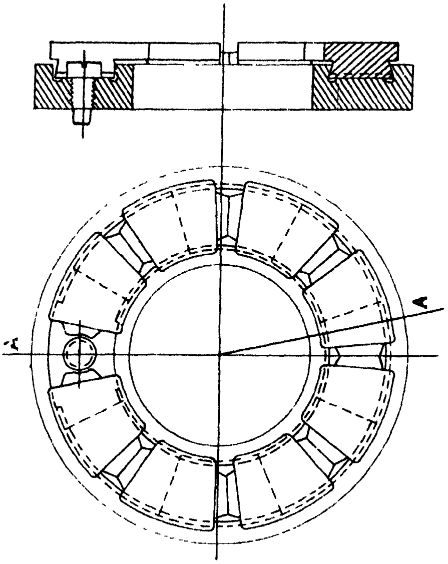

Fig. 228.

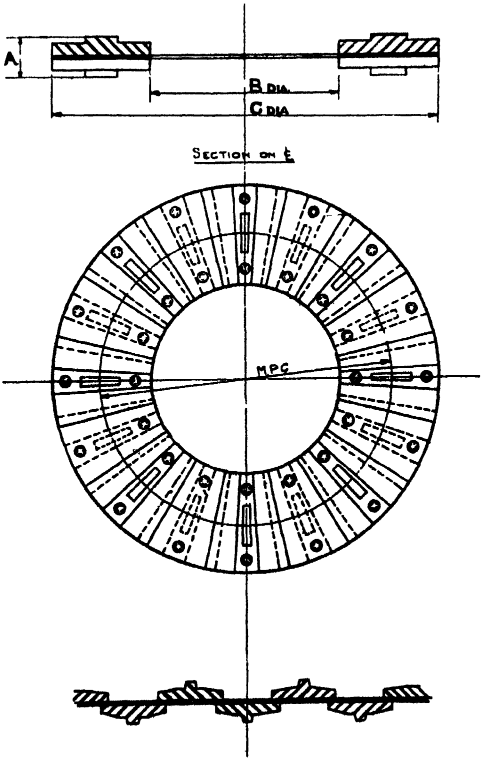

Fig. 229.

free to rotate in a cage and place themselves at the proper lubricating angle with the opposing face. Longitudinal movement is prevented by flanges working in grooves. This bearing was lubricated with grease and ran very satisfactorily.

The Michell thrust bearing is a modification of the above design. The blocks or pads are either designed as shown in fig. 226 or have ridges along their backs upon which the pad can rock and place itself at an angle with the collar on the shaft or footstep, as the case may be. In the case of the thrust block (fig. 227) for a steam turbine, the bearing consists of four main parts, viz. the collar, 1 ; the main thrust-bearingring. 2 ; the surging thrust bearing, 3 ; and the equalising washer, 4.

The main thrust-bearing ring is shown in detail in fig. 228. The pads are held in position by being loosely dovetailed into a carrying member from which they can easily be removed by taking out the stop screw and sliding the pads to a notch or " gate " cut in the ring at this point. In order to ensure that the pad-ring shall run accurately against the collar, the equalising-washer, fig. 229, is used. It consists of two rings of opposed segmental equalising levers, attached to opposite sides of a flexible diaphragm, the middle points of the levers on one face abutting on the bearing casing or "housing," and those on the other face against the ring 2, fig. 227.

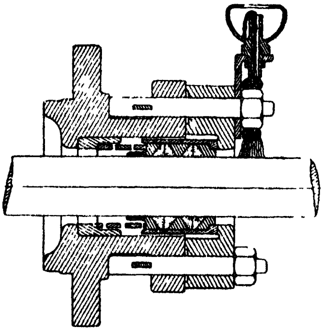

FIG. 230.

When the pressure may act in either direction, as in the case of a screw shaft thrust bearing, a ring and equalising pad are fitted on both sides of the collar. In all cases, the equivalent of bath lubrication is provided, means being devised for lifting the lubricant and allowing it to reach all the bearing freely.

Many forms of the Michell bearing are in use, the makers having standardised a great variety of designs for use according to the requirements of the running conditions.

Piston-Rod Packings.—The conditions under which the bearing surfaces of piston-rods work, although the surfaces are of cylindrical form, are very different from those of journals or shafts, for the motion is a longitudinal instead of a rotary one. It is seldom that they are used as guides, the load on them being restricted to that resulting from the devices used to take up the wear and keep the joints steam-tight. It is the slide-blocks and piston head which should be made to act as guides, and if these be not accurately fixed in line, or become a little loose by wear, the packing will blow, unless it is made free to move laterally with the rod.

In fig. 230 is shown a form of metallic packing, known as the " United Kingdom Metallic Packing," which has given good results on locomotives. Split-rings of white metal, of triangular section, are held in a brass frame, which is free to slide laterally against a surface upon which it is pressed by the steam and a strong spring. As the white metal wears away it is kept in contact with the piston-rod by the pressure of a spring. For such packings to work satisfactorily, the rod must be quite true, and free from shoulders at the ends. Good lubrication is also absolutely necessary. It is generally supplied by means of a small siphon or drop lubricator to a pad resting upon or even surrounding the piston-rod, which is thus kept moistened with oil.

Oil Pressure Thrust Bearings. -In the case of the Curtis turbine, the heavily loaded vertical shaft is carried on an oil-pad maintained by an oil-pump driven by the turbine. In this case the oil-pad is a comparatively thick one, and there is very little friction. To insure an oil-pad at starting, Michell's automatic lubricating gear, described on p. 522, might be used.

CHAPTER XIII.

THE DESIGN AND LUBRICATION OF BALL AND ROLLER BEARINGS.

Introductory.—It was pointed out in Chapter II. that although a lubricant is a substance which when applied to a surface makes it slippery, many viscous liquids, although somewhat deficient in oiliness, are regarded as lubricants, for they are forced by the relative motion of the bearings between the surfaces, which are thus separated entirely and glide freely the one over the other. It is true that a viscous liquid, to be considered a good lubricant, should be oily in a marked degree, as well as viscous, but very many liquids are now used as lubricants which are not markedly oily. In such cases, the absence of marked oiliness is compensated for by using antifriction metals for the surfaces and supplying the lubricant under pressure to the bearings.

Before the true action of oily and viscous lubrication was understood, it was supposed by many that grease and oil were aggregations of microscopic balls or spheres, which supported the load and kept the surfaces apart in very much the same way that the same object is effected by manufactured metallic balls or rollers. Indeed, if we recognise that lubrication is really effected by very different methods, we shall feel justified in regarding balls and rollers as acting as lubricants; our only reason for not doing so is that we can see how the ball or roller acts, but cannot see as clearly how the molecules act. However, we now know that the molecules of lubricants certainly do not act either as balls or rollers, but fix themselves on the surfaces they meet, and form a surface which resembles velvet pile very closely. At present we do not know of any substance whose molecules are spheres, the stray fields of which extend evenly from the centre, so that they could act as balls.

Advantages of Ball and Roller Bearings. Although lubricants have not been found to act as though they were balls or rollers, of late years ball and roller bearings have been very greatly improved in design and material, and are coming more and more in demand for a great variety of purposes. They give low coefficients of friction at all speeds, require very little lubrication, and are very durable when properly proportioned so as to carry the loads they have to bear at the speeds at which they have to run.

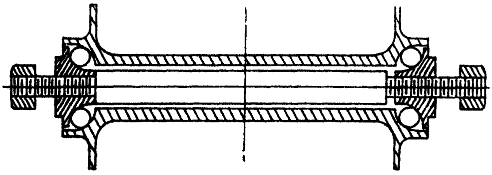

FIG. 231.

The forerunner of the ball-bearing industry was undoubtedly the cup and cone form of construction shown in fig. 231, used for cycle hubs. Up to this time balls or rollers were seldom used. In the case of cycles, where the loads were light, the speeds moderate, and the shocks small, such bearings worked well even when the design was imperfect, the material indifferent in quality, and the accuracy of construction not first class. But a ball-bearing industry was created, and those engaged in it have striven persistently to produce an article perfect in design, constructed of the best materials, and made with an accuracy adequate for the perfect running of the bearing. The result has been that balls and rollers are now used with advantage for almost all kinds of bearings.

Design of Ball Bearings.- *Accuracy of Manufacture.*—The life of a ball or roller bearing depends very largely upon the accuracy of its construction, for if the ball paths have hills and hollows, or if the balls differ in diameter by even a very minute amount, the stress in some of the balls may be very much greater than the mean. The paramount importance of making the ball races as perfect as possible and free from even small scratches, as well as of the same degree of hardness throughout, has been recognised from the first by reputable makers of ball bearings. The idea that the large balls will wear more than smaller ones in the same race, so that after a time every ball will take a fair share of the load, is altogether fallacious, since the overburdened balls do not simply wear down. Such overburdened balls soon develop specks and flakes, which damage the ball races and bring about the failure of the whole bearing. Under certain conditions the smaller balls are the first to show signs of failure. We shall see that the development of irregularities in the ball surfaces is a valuable indication that the balls are being overstressed.

As it is the elasticity of the metal that enables the small balls to take some portion of the load, it is clear that the smaller the permissible load the more will the large balls in the race be overstrained.

For the above reasons it is important that the ball races should be accurately ground, of equal hardness throughout, and made of single pieces of metal. Any discontinuity in the metallic surface, or irregularity resulting from the presence of a slot-filling groove for getting the balls in position, somewhat decreases the safe load and the life of the bearing.

Design of Races.—Although the forerunner of the ball bearing was the cup and cone type (fig. 231) used for the cycle hub, its performance fell far short of the requirements of more heavily loaded axles. As the load on a ball is spread over a very small area, attempts were first made to increase the number of points of contact with the races, and so reduce the stresses and strains both in the balls and the races they run upon. According to Stribeck, the stress in a ball at the centre of the contact area is often as high as 240 tons per sq. inch. This enormous intensity of stress is, of course, quite local, and exists only at the centre of the pressure area. Goodman[1] remarks: "At first it seems incredible that there can be so high a stress as this in the material, but when it is remembered that even small loads produce a permanent set in balls, it will be evident that the stresses must be very severe; then, again, since the area in contact between the ball and the plate is very small the mean stress over it must be very great." However, increasing the number of races along which each ball runs has not proved satisfactory, except for low speeds and small loads.

Fig. 232 shows a ball bearing, the balls of which have four points of contact. It will be evident that, owing to the elasticity of the balls and race, variations in the load will alter the position of the balls with regard to the races and cause friction and wear. Even in such a design as fig. 233, in which the balls have

[1] *Proc. Inst. Civil Engineers*, clxxxix. (1912), pp. 82–127.

three points of contact, the elastic displacement of the balls and races will have this effect. Indeed, it has been found that balls work most satisfactorily with two points of contact only, one on the inside and one on the outside race.

Fig. 234 shows the form of race which is considered to make the most satisfactory all-round bearing. The races are unbroken, and they are grooved to a radius of about two-thirds the diameter of the ball. This increases the area of contact of balls and race, but makes the bearing a very rigid one. Any want of true alignment in the shaft introduces severe strains upon the balls, if means are not provided to allow the outer race to swivel as required. There is also the difficulty of getting the balls in position.

Attempts have also been made to reduce the bearing stresses by using rollers instead of balls; but unfortunately rollers develop other faults which are non-existent with balls. Goodman[1] remarks: "Advocates of roller bearings often contend that in spite of the advantages of ball bearings, they have the disadvantage of a much lower load-carrying capacity for a given area of bearing surface, because the balls only bear on very small spots, whereas the rollers bear on long, narrow strips of much greater area. There is an element of truth in this objection, but the alleged disadvantage is more imaginary than real, largely because balls are usually made of harder and better material than rollers, and consequently are capable of withstanding a much higher pressure per unit area of bearing surface. Experience shows that if long rollers are made of the same degree of hardness as balls they are liable to break transversely." Goodman made many experiments on four-point ball bearings, but in all cases he found them to be unsatisfactory, on account of the grinding action between the balls and races. Stribeck[2] had a similar experience. It is considered better practice to use separate rows of balls to take the end thrust and the radial load.

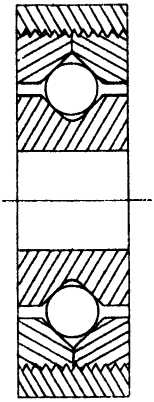

FIG. 232.

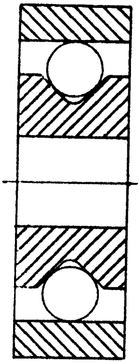

FIG. 233.

Types of Ball and Roller Bearings.—It is to obviate as much as possible the necessity of interfering with the continuity of the races, and give the bearings freedom to align themselves accurately if the shafts or spindles should be bent or inaccurately fixed, that the numerous designs of ball bearing mainly owe their existence; for, in the case of such a design as that shown in fig. 233, any want

---

[1] *Proc. Inst. Civil Engineers*, clxxxix. (1912), p. 92.

[2] *Engineering*, lxxi. (1901), p. 463.

of accuracy in the running of the shaft would put very serious strain on the balls. However, there are numerous instances where the shafts of bearings are short and stiff and run accurately, when these single-row deep-groove ball bearings answer admirably, such as the front hubs of automobiles and general engineering applications where light loads are present on short shafts.

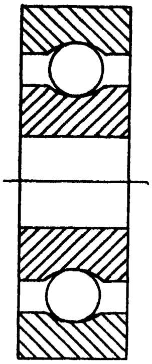

FIG. 234.

Fig. 234 shows a S.K.F.[1] bearing of this kind. It is clear that the nearer the radius of the ball agrees with that of the race the greater will be the area of contact and the greater the friction. In these bearings a compromise is effected between load-bearing capacity and friction saving. For normal work the radius of the outer race is 6 to 8 per cent. greater than the ball, whilst the inner race is 4 per cent. larger than the ball. Figs. 235 and 236 show how the balls are assembled without a filling slot. As the balls are some distance apart when properly spaced, they are held in position by two accurately stamped bands riveted together after the balls have been put in the races. It is considered that although there are fewer balls in the bearing when this form of construction is used instead of the filling-slot method, the life is quite as good or even better.

N.K.A. radial ball bearings are constructed as shown in fig. 237.[2] Here the balls are distanced and held in line by a cage formed of bent wire all in one piece, the balls being slipped into position through a side slot cut for the purpose. They are made for double rows of balls as well as single. For line shafting or other cases in which self-alignment is required, arrangements are made for the whole housing to swivel in brackets.

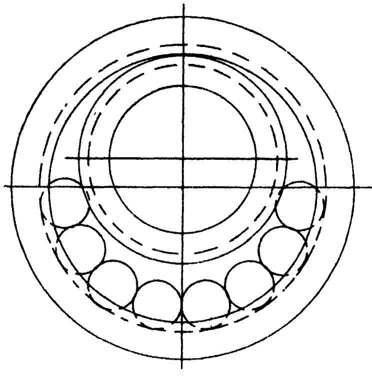

FIG. 235.

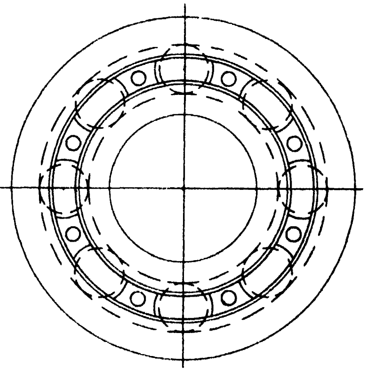

FIG. 236.

A great deal of ingenuity has been shown in the design of ball-spacing cages, and there are many forms which answer their purpose quite satisfactorily.

In fig. 238 we have a front hub mounting for a motor car. Here the load is carried by two single row radial bearings of the S.K.F. type, which will carry a very considerable end thrust.

Another single-row bearing by the same company, designed for magneto

---

[1] The Skefko Ball Bearing Co., Ltd.
[2] Northern Ball Bearings, Ltd.

ball bearings, is shown in fig. 239. Here the balls are held in a cage and run on a symmetrical inner race. The outer race is so cut away on one side that it can be slid off the balls for their easy examination.

The original S.K.F. ball bearing is the spherical, double-row, self-aligning

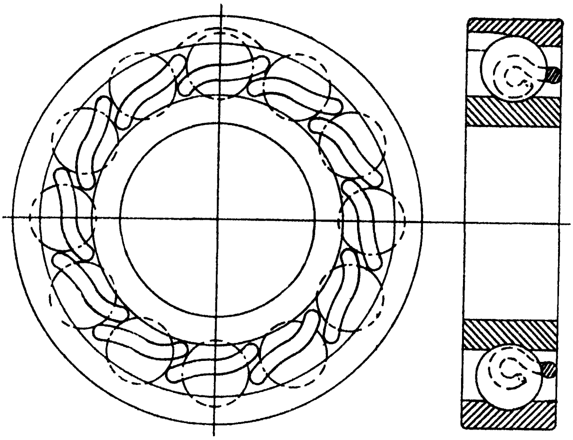

FIG. 237.

bearing, and its performance has been eminently satisfactory over a wide range of applications. As shown in fig. 240, the outer race for the two lines of balls is spherical, whilst the inner race has two rigid, deep ball tracks, and the lines

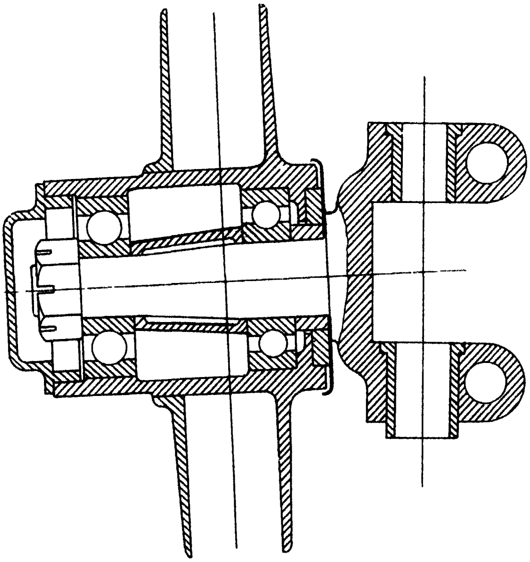

FIG. 238.

of balls are distanced by a suitable cage. When the inner race is secured to a shaft which does not run truly, the balls shift their tracks on the outer race as the shaft rotates irregularly, and all undue strains are prevented. The spherical form of the outer race enables the inner race to be rotated so as to expose the balls and cage. In this position the balls and cage can be assembled or examined.

Although balls are generally more satisfactory than rollers, roller bearings are preferred for many bearings where the loads are heavy and the speeds moderate. Fig. 241 shows the S.K F. roller bearing with single race. It will be noticed that the outer race is curved and is, therefore, capable of slight response to misalignment of the shaft. Fig. 242 shows the S.K.F. self-aligning roller bearing. The rollers are conical in so far as the largest diameter is off centre, and while the race track on the smaller race coincides with the contour of the roller, the spherical outer race has a radius 5 per cent. larger. Under no load this means line contact on the inner race and point contact on the outer, but actually under working conditions a definite amount of roller length is presented. The construction is so arranged that a small component of load coming through the roller is permanently acting against the inner shoulder of the inner race, thus keeping the roller properly located. The rubbing friction in question is trifling, and the location component of the load is just sufficient to allow the cage to fulfil its proper function—viz. that of

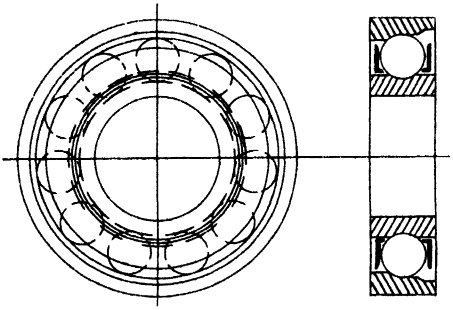

Fig. 239.

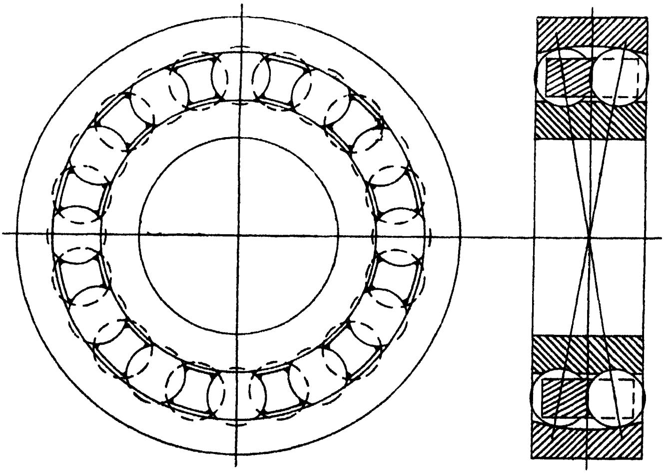

Fig. 240.

separator. It will be seen that the outer race can be rotated at right angles on the inner race and rollers, and in this position the bearing can be assembled or examined in detail. Each row of rollers is spaced by a separate cage. Its thrust capacity for continuous duty is about 30 per cent. of the value of the admissible load, or 50 per cent. where the thrust is intermittent. In both this and the ball types the inner race, cage, and balls or rollers form a unit capable of swivelling within the outer race, and the fact that this is based on rolling motion presents a strong contrast to many other methods employed to secure this flexibility. It has been used successfully for wire-drawing mills, rolling mills, heavy mill work, trams, rolling-stock, etc.

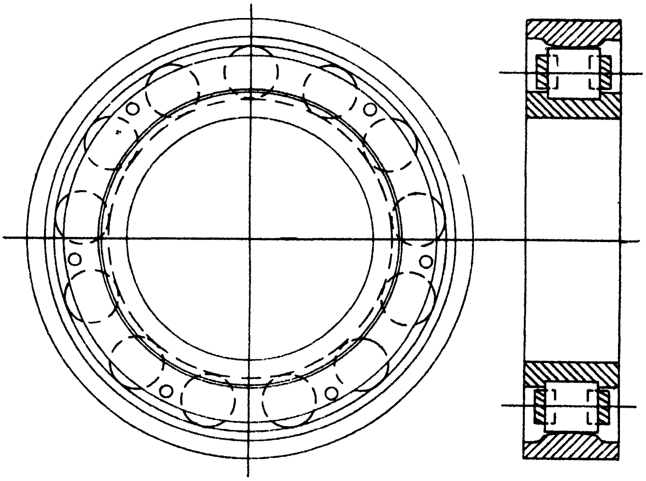

FIG. 241.

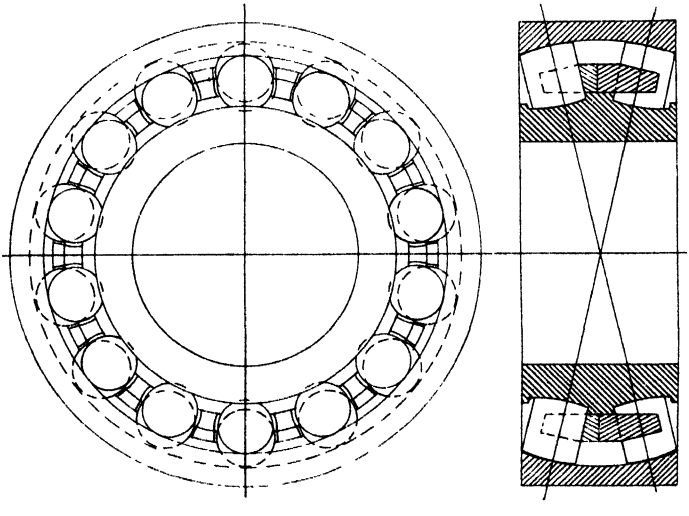

FIG. 242.

In both these designs of roller bearing the curvatures given, either to the roller or race surfaces, eliminates the skew effect responsible for the wear and much of the friction.

In fig. 243 we have the single-row and the double-row S.K.F. roller bearing

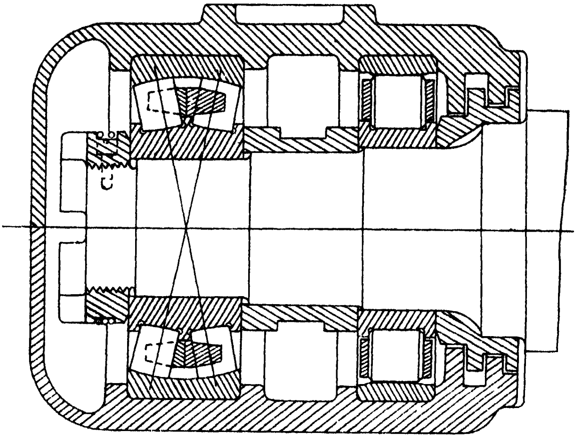

FIG. 243.

used to make up the axle-box of the tram or railway vehicle. Here the double row of rollers serves to take part of the load as well as the end thrust, whilst the single row only takes its share of the load.

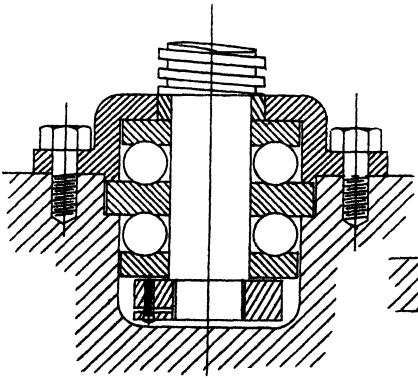

FIG. 244.

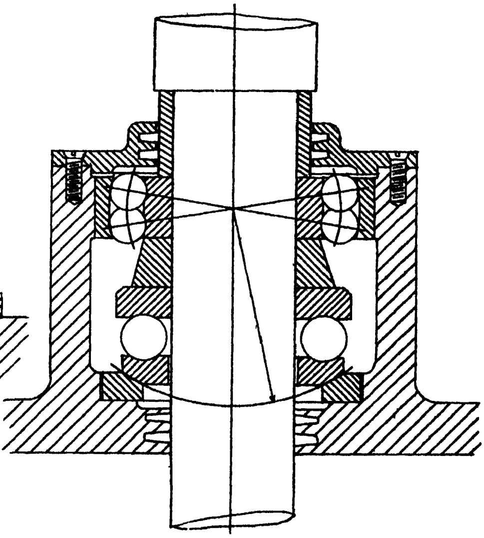

FIG. 245.

Fig. 244 illustrates a double-thrust screw shaft bearing, and fig. 245 a combined thrust bearing and radial bearing.

Hyatt Roller and N.D. Ball Bearings.—Messrs. Delco-Remy & Hyatt, Ltd., make roller and ball bearings which have proved their suitability for a wide ange of purposes such as magnetos, line shafts, mine-tub wheels, axle-boxes, conveyor idlers, trolly wheels, power-driven crane wheels, winches, electric traction motors, etc.

The illustration (fig. 246) shows their double-row ball bearing. It will be noticed that the races are similar to those of the ordinary cup bearing for bicycles in their working, and when the bearing is subject to end stress the balls will run on races of slightly different diameters and rotate at different speeds. To meet these conditions, each row of balls has a separate cage.

In this bearing the raceways are so designed that loads from any direction are successfully sustained, and although it is broader than that of a single-row bearing, its width is less than combinations of single-row and thrust bearings.

The inner race is a unitary two-raced member of chrome alloy steel. Both races are ground at the same time, ensuring absolute concentricity. The outer races are separate members, made of special steel. A thin steel shell is provided to bind the two races together in their correct positions, and is closed over the races when the bearing is assembled.

The Hyatt roller bearings are made in several designs. The rollers are wound from bar stock chrome vanadium steel into hollow helical form. These resilient rollers are heat-treated and accurately ground. The inner and outer races are of low-carbon steel, case-hardened and ground on the operating surfaces. The cage consists of two steel end rings rigidly connected by steel bars acting as distance pieces and passing through the hollow helical rollers, and are securely riveted over in the end rings. This permits of the maximum number of rollers being employed, with consequent maximum load-carrying capacity.

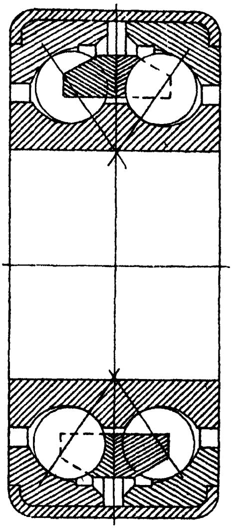

FIG. 246.

Slit-race Hyatt roller bearings are largely used. It has been found possible to dispense with an inner race, and run the rollers direct on steel journals, with rollers of generous length. The rollers and cage are of the construction shown in fig. 247. This bearing is provided with a thin planished steel-slit outer race of non-heat-treated high-carbon steel. Fig. 248 shows this bearing

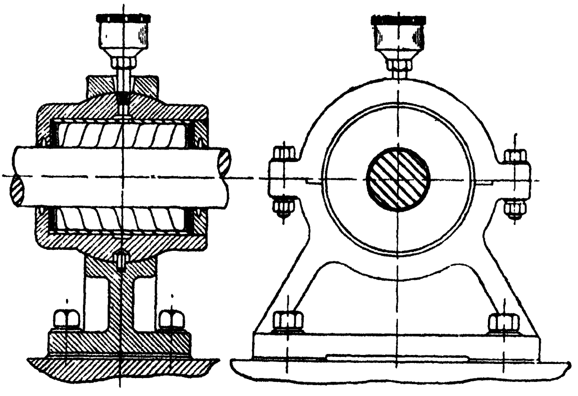

FIG. 247.

as used for trolley wheels, and fig. 247 the form used for line shafting, the housing of the latter being self-aligning. Fig. 249 shows Hyatt roller bearings as designed for tramcar axle-boxes.

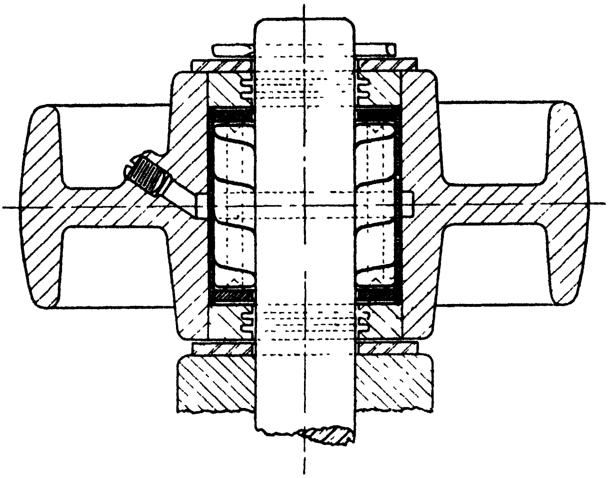

FIG. 248.

Hoffman Ball and Roller Bearings.—The Hoffman Manufacturing Co. make both ball and roller bearings of the single-row type.

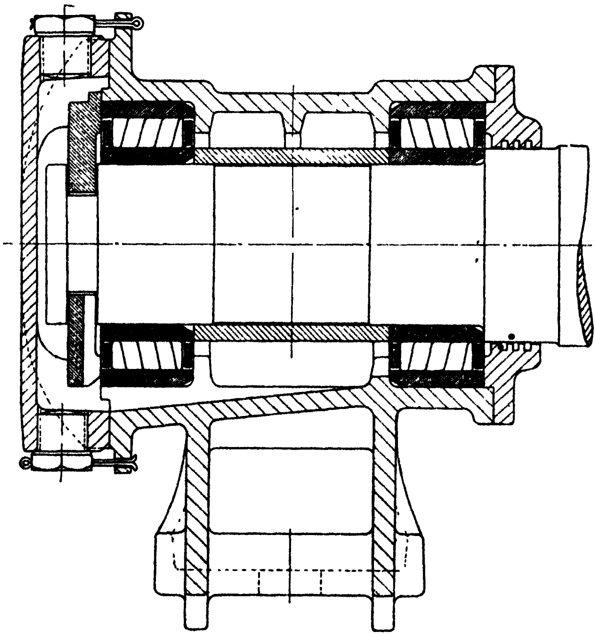

FIG. 249.

In the case of ball bearings, two designs are made. In one the balls are well distanced, and are assembled as shown in figs. 235 and 236. In the other, the balls are closer together, and are inserted through a filling slot. The Hoffman cage is in two halves, which are firmly riveted together by a special electrical machine. Fig. 250 illustrates one of the Hoffman single-row ball bearings of the self-aligning type for journal bearings. If it is necessary to take the bearing out of its housing, this can be done by swinging it 90° and then sliding it round until it is opposite to the slot provided on one side of the housing, from which it can easily be withdrawn. By removing the screw, grease can be forced into the bearing with a grease gun. Balls are used for sizes up to 2¾-inch shaft diameter. For larger shafts, roller bearings of similar design are supplied.

Immediately alongside the bearing, and within the spherical seating, are the end covers. It will be seen that these covers must follow the bearing in its movements within the spherical seating and, consequently, at all times maintain their fine clearance. A complete range of hanger-brackets, wall-brackets, wall-boxes, etc., are made for use with the above bearings.

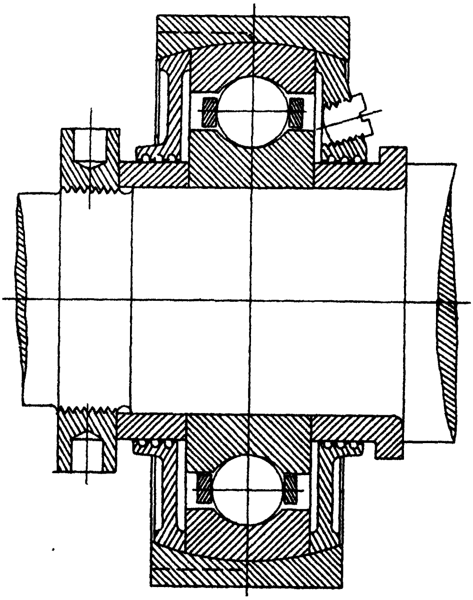

FIG 250.

The Hoffman Company also supply roller bearings of the short variety. The rollers run in flat-bottomed grooves in the central race, and also on flat surfaces on the outer race. The roller cage is of a substantial design in one piece, the arrangement admitting of the easy assembly of the parts.

Thrust bearings of both single and double thrust are also supplied.

All bearings are of the highest class, and have been on the market for more than a quarter of a century.

Boch Roller Bearings.—These bearings are of the form shown in fig. 251. To prevent the rollers from being pressed out longitudinally, they have heads at their largest ends, the collars on which bear against faces on the inner race, and as this contact-point is on a line with the cone face of the roller, there is very little rubbing friction. The rollers are distanced by a cage of ample strength. When used in the hub of a motor-vehicle wheel, two rows of rollers inclined in opposite directions are used. A design for a front-wheel hub is shown in fig. 252.

It is not usual to arrange any oiler for these bearings, as it is not really required. If the hubs are filled in the first instance with a good grease, they will last twelve or eighteen months without attention, but it is advisable occasionally (say once in six months) to remove the hub cap and insert a little thick oil or thin grease, which will gradually work itself through and mix with the older grease. For commercial vehicles sometimes, in later models, a greaser is arranged for force-feed greasing.

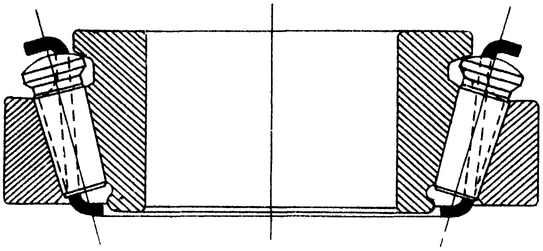

FIG. 251.

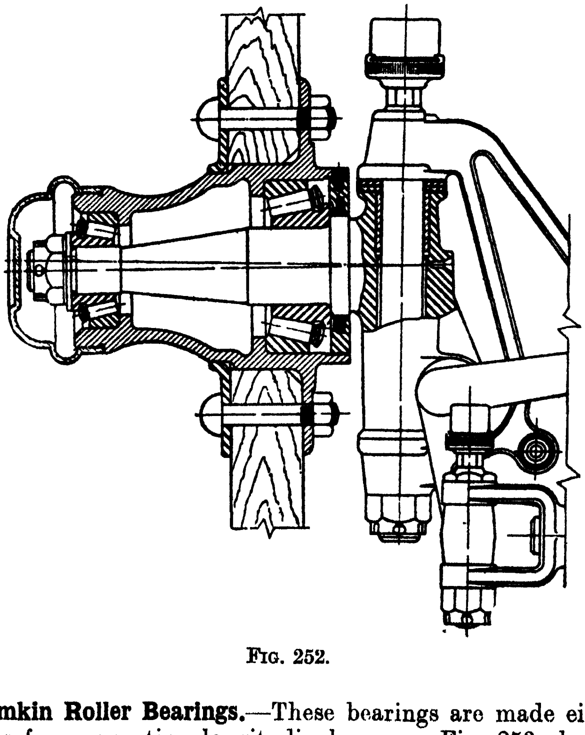

FIG. 252.

British Timkin Roller Bearings.—These bearings are made either with or without heads for preventing longitudinal creep. Fig. 253 shows the most recent form. In the hub of a wheel they are arranged much as in fig. 252. The roller cage is of steel and is of ample strength, and the rollers are prevented from getting out of position by the collar on the inside race.

The Empire Roller Bearing. This is a design having parallel rollers. A great variety of forms are made, so as to meet all sorts of requirements in the most economical manner. For light work a simple form is made, the rollers not being fixed in a cage and working on the faces of both the shaft and housing In other forms a substantial cage is provided. These cages are either split or whole, and bearings on the ends of the rollers work in holes drilled in them. In some cases the races are split so that the bearing can be easily dismantled, and housings are supplied which are provided with swivel supports.

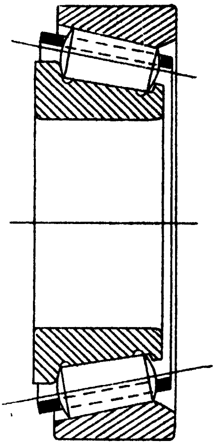

FIG. 253.

Ball Thrust Bearings.—Bearings for thrust purposes of the ball or roller pattern are much more simple in design than the radial form, and are made by most roller- and ball-bearing manufacturers. There is no difficulty in assembling them, and the spacing cages are of many simple patterns. Fig. 244 shows a S.K.F. double-thrust bearing In one form of cage, the balls fit in cup-shaped hollows drilled on alternate sides of the cage. The cage is thus centred accurately between the races. Fig. 245 shows another S.K.F. combined radial and thrust self-aligning bearing.

Lubrication of Ball and Roller Bearings.—When a ball or roller runs on a circular race, both the roller and the race are distorted under the load, and the contact surface is not a point but an appreciable area. At the point of contact the area of the ball is decreased by compression, whereas the contact area of the race is increased as shown in fig. 19, p. 36. As a result of this, as the ball rolls, the surfaces slip and, if they are not lubricated, wear takes place Stanton[1] considers that the strains on the front sides of the balls differ a little from those on the back side, and his diagram differs slightly from the one illustrated. It is clear that for proper lubrication an oily lubricant is required, for the lubricating film is an adsorbed one.

All makers and users of ball bearings are insistent concerning the necessity of using a neutral lubricant. The least trace of acid will tarnish or pit the balls and races and destroy the bearing.

For low-speed ball bearings grease is recommended, or a good quality neutral mineral oil. When grease is used it should be chemically neutral, comparatively free from neutral saponifiable oil, thoroughly mixed and based on a high-grade mineral oil. The presence of unsaponifiable fatty oil is harmful, owing to its tendency to become rancid and develop acid, and the limit of 1 per cent. only should be allowed.

A representative specification, according to the Skefko Ball Bearing Co., of a good quality cup grease is as follows:—

Free mineral acid,	Nil.
Free alkali,	0·1 per cent.
Sulphur,	0·03 „
Resin,	Nil.
Salt,	„
Neutral saponifiable oil,	1·00 per cent.
Ash,	1·8 „
Moisture,	2·0 „
Abrasive particles (sand, etc.),	Nil.
Melting-point,	194° F. (90° C.).

---

[1] *Dictionary of Applied Physics*, Glazebrook, p. 397.

Grease lubrication is suitable for speeds up to, say, 3000 r.p.m., but greater care is required at the higher revolutions to see that heat is not developed through the housing being too tightly packed with lubricant.

Where the preservation of the bearing from harmful atmospheres or dirt is the principal feature and the speed is moderate, the housing can be completely filled with grease. For speeds between 1000 and 3000 r.p.m. it will be sufficient if the housing be half-filled with grease.

Oil is the ideal lubricant and should have the following specification according to the Skefko Co. :—

Free mineral acid, ...	Nil.
Free alkali, ...	Trace.
Sulphur, ...	0·03 per cent.
Ash, ...	Trace.
Resin, ...	Nil.
Salt, ...	„
Flash-point (Pensky-Martens) . . .	300° F.

Heat test (15 minutes at flash-point); slight darkening, but no sediment. Oil should be pure mineral.

Viscosity, 200 seconds, Redwood, at 100° F.

The above specification is recommended by this company for speeds between 3000 r.p.m. and 5000 r.p.m for average size bearings, and applied so that the oil-bath surface is maintained at the level of the centre of the bottom ball or roller. In the case of small bearings the oil used may have slightly less viscosity.

Graphite is not recommended as a lubricant.

Bearing Materials.—For balls and races it is imperative that the best quality of material be used, so as to withstand the great pressures and rapid variations of stress that occur in running. Steel made from best Swedish charcoal iron is generally used, containing roughly 1 per cent. carbon and 1·5 per cent. chromium, as it permits of thoroughly efficient hardening. Such a steel gives a combination of toughness, resistance to fatigue, and hardness.

Safe Loads and Speeds for Ball Bearings. Goodman devised a method of determining the safe load and speed for a ball bearing by making microscopic examinations of the balls, before and after making a few million revolutions. The method gave very satisfactory results; for if the balls had been running under satisfactory conditions of speed, load, etc., the surface of the ball was undamaged by the friction, but if the conditions were too severe the ball showed signs of pitting and flaking, and occasionally of scratching and peeling. The tests very soon revealed the fact that the load and the number of revolutions per minute of the shaft were not the only factors to be dealt with, for if in a flat thrust bearing running at maximum speed and load, these conditions were kept constant, and the same balls allowed to run in a ball-path of greater radius, they showed signs of failing.

In a thrust bearing the balls were always under the same load, but the direction of their line of loading is always changing. In a radial bearing, however, the balls are gradually loaded for a small fraction of a second, and are then gently released from the stress: for at least one-half of the time they get a complete rest as regards supporting any load, which appears to Goodman to enable them to withstand higher loads at a given speed than they are capable of doing in a thrust bearing.

Stribeck and Goodman have framed formulæ for calculating the permissible load or radial and thrust bearings which give very similar results. Goodman's expression is as follows :—

$$W = \frac{1,000,000md^3}{ND + 2000d} \text{ pounds.}$$

This is for plain cylindrical ball races, when

N = the revolutions per minute of shaft,
D = the diameter of the ball-race path in inches,
d = the diameter of the ball in inches,
m = the number of balls in the bearing.

For hollow races for bearings of ordinary quality

$$W = \frac{2{,}000{,}000 m d^3}{ND + 2000d} \text{ pounds,}$$

and for bearings of the best quality

$$W = \frac{2{,}500{,}000 m d^3}{ND + 2000d} \text{ pounds.}$$

For thrust bearings we have

$$W = \frac{500{,}000 m d^3}{ND + 200d} \text{ for flat ball races,}$$

$$W = \frac{1{,}000{,}000 m d^3}{ND + 200d} \text{ for ordinary quality bearings,}$$

$$W = \frac{1{,}250{,}000 m d^3}{ND + 200d} \text{ for best quality bearings.}$$

Ball and roller bearings are now so extensively used and have been at work so many years, that manufacturers of repute now know from experience what to supply for any particular load, speed, or condition of working. The result is that manufacturers of machines can use such bearings without the fear of failure they ran not many years ago.

Coefficient of Friction of Ball and Roller Bearings. One of the early forms of ball bearing known as the "Rudge" was experimented upon by Goodman. The results of his experiments are given in Tables CLX. and CLXI. The results with white neutral oil are rather irregular, but these clearly show that, as with pale American oil, the coefficient of friction varies very little with moderate loads; the frictional resistance, therefore, varies almost directly with the load.

When the coefficient of friction is reduced to 0·007, there is very little to be gained by any further reduction. However, coefficients as low as 0·001 have been reached. Coefficients as low as this are obtained with well-designed journal bearings for railway vehicles, but in the case of ordinary road vehicles bath lubrication is very difficult to obtain, and the friction coefficient is very much higher than with ball or roller bearings. Indeed it is very seldom that ordinary bearings are designed and lubricated so as to give such low frictional resistances as ball bearings give.

Ball bearings and roller bearings also have very low static coefficients of friction. On this account vehicles fitted with them start and run at low speeds much better than those fitted with ordinary journals. Lubrication is effected by grease, which only need be supplied in small quantities occasionally.

Given circumstances under which the conditions of running are not too severe, such as are met with in railway work, the modern ball or roller bearing works more economically than the plain bearing, both from the point of view of lubrication and friction. Indeed, for motor vehicles line shafting, tramway cars, and many other purposes, they have, or are, displacing other designs of bearing.

TABLE CLX.—RUDGE BALL BEARING. WHITE "NEUTRAL" OIL.

Load in Lbs.	Speed, 19 Revolutions per Minute.		Speed, 157 Revolutions per Minute.		Speed, 350 Revolutions per Minute.	
	Coefficient of Friction.	Frictional Resistance, Lbs.	Coefficient of Friction.	Frictional Resistance, Lbs.	Coefficient of Friction.	Frictional Resistance, Lbs.
10	·0060	·06	·0105	·10	·0105	·10
20	·0045	·09	·0067	·13	·0120	·24
30	·0050	·15	·0050	·15	·0110	·33
40	·0052	·21	·0052	·21	·0097	·39
50	·0054	·27	·0054	·27	·0090	·45
60	·0050	·30	·0055	·33	·0075	·45
70	·0049	·34	·0054	·38	·0068	·47
80	·0048	·38	·0062	·49	·0060	·48
90	·0050	·45	·0068	·61	·0060	·54
100	·0058	·58	·0069	·69	·0057	·57
110	·0054	·59	·0065	·71	·0060	·66
120	·0055	·66	·0075	·90	·0057	·68
130	·0058	·75	·0078	1·01	·0062	·81
140	·0056	·78	·0077	1·08	·0060	·84
150	·0060	·90	·0083	1·24	·0062	·93
160	·0075	1·20	·0081	1·29	·0058	·93
170	·0079	1·34	·0078	1·33	·0055	·93
180	·0079	1·42	·0078	1·40	·0053	·95
190	·0087	1·65	·0076	1·44	·0054	1·03
200	·0090	1·80	·0081	1·62	·0060	1·20
Mean	·0060	...	·0070	...	·0071	...

TABLE CLXI.—RUDGE BALL BEARING. PALE AMERICAN OIL.

Load, Lbs.	Speed, 19 Revolutions per Minute.		Speed, 157 Revolutions per Minute.	
	Coefficient of Friction.	Frictional Resistance, Lbs.	Coefficient of Friction.	Frictional Resistance. Lbs.
10	·0075	·07	·0060	·06
20	·0075	·15	·0075	·15
40	·0071	·28	·0075	·30
68	·0070	·42	·0075	·45
80	·0071	·57	·0071	·57
100	·0073	·73	·0072	·72
120	·0071	·85	·0069	·83
140	·0072	1·01	·0067	·94
160	·0072	1·15	·0066	1·06
180	·0072	1·30	·0066	1·19
200	·0073	1·46	·0066	1·32
Mean	·0072	...	·0068	...

Laws of Ball-bearing Friction. 1. The coefficient of friction decreases slightly as the load is increased.

2. The coefficient of friction is practically constant at all speeds.

3. The coefficient of friction is independent of the temperature of the bearing.

4. The starting effort is practically the same as the running friction.

5. The wear on the balls when not overloaded is almost negligible.

6. The frictional resistance with large balls is less than with small balls.

7. The safe load diminishes with increase of speed.

Laws of Roller-bearing Friction.—Roller-bearing friction is higher than that of ball-bearing friction, otherwise the laws of friction are similar to those of ball bearings.

Until recently roller bearings gave considerable trouble from end thrust, for the rollers did not keep in proper alignment with the shaft. Good results would appear to have been attained with the roller bearings we have illustrated; but further experiment is necessary to prove that they will be durable under heavy loads and high speeds.

CHAPTER XIV.

THE LUBRICATION OF ENGINES AND MACHINES.

In this chapter we deal briefly with the general principles and practice governing the lubrication of various types of engines, machinery, and mechanisms.

Mineral Oils v. *Fatty Oils.* Whereas in the past vegetable and animal oils and fats were the lubricants in general use, and mineral oils occupied a subordinate position and were looked upon more or less with distrust, the universal practice now is to use a mineral lubricating oil wherever possible. This practice has been forced upon users by the facts (1) that the supply of the older lubricants is not nearly adequate to meet present-day demands; (2) that the chemical properties of mineral oils fit them better than the fatty oils to meet the conditions required by modern engines and machinery; and (3) that the mineral oils are the cheaper lubricants. Not only is the tendency of the lubricant to thicken and gum by oxidation very much less when mineral and blended oils are used, but the mineral oils do not deteriorate by continued use, and if occasionally filtered to remove impurities, their life appears to have no limit. The risk of fire from the spontaneous ignition of oily waste and sponge cloths is also eliminated when mineral oils are used as lubricants.

The older, fatty lubricants have not, however, been by any means entirely displaced. They are still needed to augment the property of "oiliness" in which the mineral oils, as a class, are deficient. They are used, generally, in admixture with mineral oils, forming the blended or "compounded" oils, but for some special purposes fatty oils are still used unmixed, as, for example, castor oil, which is used for aircraft rotary engines and racing automobile engines. The following broad principles may be stated: -

For bearings running continuously at high speeds, seldom stopping and restarting, and provided with an ample supply of oil by pump, ring, or bath lubrication, pure mineral oils are the most suitable. As the friction in such cases is fluid friction in the lubricant itself, the viscosity of the mineral oil used should be no greater than is required to carry the load. For bearings running intermittently, stopping and starting at intervals, pure mineral oils are generally suitable for light loads and for high speeds, and compounded oils for heavy loads and for low speeds, the general principle being to use a compounded oil where the amount of solid friction is so great as to make it necessary to increase the oiliness of the mineral oil. The term "compounded oil" in this connection includes, of course, a mineral oil to which a little fatty acid has been added (so-called "Germ Process" oil). Any pressure below 70 lbs. per sq. inch may be regarded as a light load, and any journal surface speed below 100 feet per minute may be termed a low speed.

Fats and Greases.—The contrast in lubricating properties between mineral oils and fatty oils exists also in the case of a pure mineral grease such as petroleum jelly, and an animal fat such as tallow, the latter possessing in a greater degree the property of greasiness.

In the case of both mineral oils and greases, all refining processes tend to remove the more valuable lubricating constituents. Thus the medicinal, water-white, and tasteless *paraffinum liquidum*, though possessed of good viscosity, is a poor lubricant, and so are the refined and more or less colourless petroleum jellies, "petrolatum," "vaseline," etc. Yet the unrefined cylinder stock from which these are produced is an excellent lubricant.

A number of lubricating greases are made by thickening mineral oils with soap, or by emulsifying mineral oils and fatty oils with soap and water. These have been described in Chapter VI., section G, pp. 169-180.

Large quantities of these greases are used, with good results, for the lubrication of railway-wagon axles, and some of them are excellent lubricants for the bearings of slow-moving machinery. When the loads to be carried are exceptionally heavy, unctuous solids, such as plumbago, talc, and mica, are sometimes added to the grease. These solids prevent abrasion at points where the pressure forcing the surfaces together is very great.

Except in special cases, greases should not be used for quick-running journals, shafts, or spindles, the frictional resistance which they offer to the relative motion of the surfaces causing great loss of power. Thus a case is mentioned by Simpson in which the owner of a mill using water-power decided to use grease as a lubricant instead of oil, but owing to the increased friction, the change in the method of lubrication caused the water-power to be insufficient to drive the machinery, and the use of oil had to be reverted to. Woodbury used oil for one of the two rows of looms in a cotton mill, and a consistent fat for the other. He found, under the same running conditions, that the temperature of the bearings lubricated with oil was only 4° higher than the temperature of the room, whereas the temperature of the other bearings was 22° higher. With soap-thickened mineral oils there is the liability of separation taking place, especially under the influence of steam or moisture. The mineral oil may run away and leave the soap in the grease-box or on the bearing, which is apt to run hot in consequence.

In the case of fats and greases whose melting-points are not much above the temperature of surrounding objects, it generally happens that the lubricating films are so warmed by the friction of the bearing that they actually melt when drawn between the rubbing surfaces and act as oils.

Although unsuitable, on the whole, for moderately quick-running machinery, greases answer admirably in cases where the speeds are low, or where a low coefficient of friction at starting is essential. The cheaper greases, made with rosin oil and lime, are used for cart and truck axles, whilst those composed of lubricants of superior quality are used for railway wagons, pedestals, etc.

Being soft solids, special methods have to be provided for their application to the bearings, for they do not liquefy so long as they are kept moderately cool. For railway wagons special kinds of grease are used (see p. 176), and as friction is an important consideration, the ingredients are in some countries changed to suit the seasons, for a grease sufficiently thick for summer might be altogether too stiff for winter temperatures.

It is well to bear in mind that it is only when the speed of rubbing is low that economy results from the use of greases. At all ordinary velocities a marked increase in the friction is brought about by them. This loss of power is seldom estimated at its true value. As a matter of fact, it may greatly exceed the gain resulting from the use of the cheaper lubricant.

In the United States, satisfactory results have been obtained by the use of grease for locomotive lubrication. In a preliminary report made by a Committee of the American Master Mechanics' Association [1] it is stated that during four years' experience with 203 locomotives fully equipped for grease lubrica-

---

[1] *Mechanical Engineer*, 28th July 1906.

tion during the whole or part of that time, the lubrication of pins and driving-axles with grease proved less costly than with oil. There was also a decided decrease in engine failures due to hot bearings. Journals lubricated with grease were found less liable to be cut, and therefore required less frequent turning up in the lathe. It is pointed out that grease lubrication, as applied to driving-boxes, is practically automatic, and is, therefore, more independent of neglect on the part of the driver than is oil lubrication. As regards the increased frictional resistance due to the use of grease instead of oil, it is stated that it was in no case found necessary to reduce the tonnage rating of a locomotive on account of the change from oil to grease, but no data was given as to coal consumption.

In some locomotive tests carried out by the Pennsylvania Railroad System at the Louisiana Purchase Exposition in 1904, it was found that the lubrication of locomotive axles by hard grease increased the friction losses per axle from 75 to over 100 per cent. as compared with oil lubrication. The grease used was composed about as follows: —

Oil,	28·66
Soap,	55·83
Water,	15·51
	100·00

A cake of this hard grease was pressed against the axle by springs located in the bottom of the driving-box cellars (under keeps), a perforated plate being used between the axle and the cake of grease.

Lubricants for Low Speeds.—When the relative speeds of the rubbing surfaces are less than 10 feet per minute with abundant lubrication, or even greater speeds than this with siphon lubrication, the lubricant, instead of being forced between the journal and brass and parting them, is rather swept on one side, especially under high pressures; the lubricant then depends for its efficiency upon its oiliness as well as upon its viscosity. As the actual loads which bearings will carry under such conditions without seizing depend largely upon the nature of the surfaces in contact, as well as on the oil used, it is not possible to give more than very general figures. The relative carrying powers of oils, greases, and solid lubricants can, however, be approximately stated, and the engineer must in each case by actual trial select that which gives the least amount of heating and friction.

Dealing in the first instance with those lubricants which have the greatest carrying power we have—

(*a*) Graphite, soapstone, and other solid lubricants used dry. Their efficacy depends largely upon the nature of the rubbing surfaces. Graphite, for instance, gives the best results when used on cast-iron surfaces, which are naturally somewhat porous. When these lubricants will not keep the bearing cool, the liberated heat must be carried away by a continuous stream of cold water passed over it through perforations in the metal. The wear and loss of power under such conditions are very great.

(*b*) Solid lubricants mixed with animal fats, manufactured greases, petroleum jelly, etc. These mixtures are very suitable for heavy work, especially when metal works against wood. Rosin greases are largely used for all kinds of rough work, such as cart-axles, tip-wagons, hauling machinery, etc.; they give a small coefficient of friction at low speeds, do not waste away very rapidly by evaporation, and do not run off the bearings, leaving them dry.

(*c*) Axle greases composed entirely of animal and vegetable fats or mineral oils emulsified with water, soap, and sufficient alkali to neutralise acidity. These greases are excellent lubricants for all slowly moving shafts and journals which have to carry considerable loads. Even for railway wagons they are largely used; for the frictional resistance is small at low speeds, and trains lubricated with them are easily started. Care must, however, be taken that these greases do not contain excess of water and are not adulterated with such useless substances as china clay; also that they melt as a whole, and that the oil does not run down and leave the soap. This is liable to occur with badly made greases, and hot bearings are the result.

(*d*) Fatty oils, mineral oils, and mixtures of the two. In selecting oils for very low speeds and high pressures, viscosity must be the first consideration, and next to that oiliness. This is plainly shown by the experimental results in Table CXLI. on p. 445. If an oil of sufficiently high viscosity be used, a mineral oil may give as good a result as, or even a better result than, a fatty oil; a mixture may give a better result than either. If an oil of sufficient viscosity be not available, then a fatty oil may be expected to give the best results.

Good white metals assist greatly in reducing the friction. Goodman found cast-iron bearings lined with pure lead among the best under constant loads up to 500 lbs. per sq. inch and even higher. Magnolia metal has also been found to give excellent results under very high loads and under conditions of defective lubrication. In testing mineral lubricating oil with the Thurston machine under conditions in which there was solid as well as fluid friction, Archbutt found that under the same conditions of load and speed, and with the same oil, bearings lined with white metal could carry double the load carried by plain bronze bearings without any increase of the friction.

Lubricants for Moderate Speeds.—At speeds exceeding 10 feet per minute with abundant lubrication and 100 feet per minute with more or less imperfect lubrication, a lubricant, in the case of a journal or shaft, forms a fairly thick film which wholly or almost wholly separates the rubbing surfaces. The conditions under which this film forms have been fully dealt with in the chapter on the "Theory of Viscous Lubrication." It may be mentioned, however, that when the loads are moderate (200 lbs. per sq. inch, or even more when the lubrication is perfect) the friction and also the formation of the film are wholly due to the viscosity of the liquid. But with heavy loads, the bearing surfaces are brought into contact at a point on the "off" side of the brass, and when this is the case a liquid possessing oiliness to a marked degree is required to prevent seizing.

In the case of plane surfaces, such as slide-blocks, viscosity is not quite so important a property from the lubrication point of view as oiliness, and unless the loads be small (70 lbs. per sq. inch or thereabouts), a good fatty oil or a mixed lubricant must be used.

In selecting a lubricant for journals running under ordinary conditions of speed, greater attention should be paid to viscosity than to any other property, provided always that the loads do not exceed 200 or 250 lbs. per sq. inch; for, by making the bearing surfaces of suitable materials, little harm will be done by the contact of the rubbing surfaces during the short slow-speed intervals of running. The lubrication must, however, be as perfect as possible. Indeed, it is owing to the imperfect lubricating devices so largely in use that expensive fatty oils have to be used in place of the cheaper mineral ones. These fatty oils are apt to become acid and to gum; but in reservoir bearings carrying heavy loads, and properly designed to give perfect lubrication, the objectionable qualities of the fatty oils which it may be necessary to use are masked by a liberal admixture of mineral oil. Indeed, this form of bearing reduces the friction to the smallest possible figure, enables a cheap oil to be used, and economises the lubricant.

For bearings carrying small loads pure mineral oils answer admirably, the viscosity selected being the smallest that will enable the oil-film to form properly. On the whole, the lower the speed the greater should be the viscosity, and the higher the speed the smaller the viscosity. This applies with special force to mineral oils. With increasing loads, especially if the lubrication be imperfect, it will be found that considerable wear and overheating will result unless fatty oils be added; but it is only in exceptional cases, such as when the lubrication devices are poor, that pure fatty oils need be used alone. For locomotive-engine work, a mixture of 15 to 25 per cent. rape oil and 85 to 75 per cent. mineral oil of suitable viscosity will generally work well.

Except in special cases, greases should not be used unless mixed with a good mineral oil, the oiliness of which they increase.

The bearings of railway vehicles are somewhat exceptional. They have to carry loads of as much as 380 lbs. per sq. inch, and often run at journal speeds of 9700 feet per minute, as well as very slowly. On this account, great care has to be taken in their lubrication and design. The bearings are made of white metal or bronze, are long and narrow, are well lubricated by a pad placed beneath the journal, and are kept cool to some extent by the rapidity with which they pass through the air.

Lubricants for High Speeds.—Quick-running spindles, dynamo shafts, and, indeed, all kinds of high-speed bearings, require ample bearing areas and thin oils for their lubrication. The loads carried per sq. inch are consequently low, and pure mineral oils may be used with advantage. There are instances, however, where good lubrication is impossible, and to minimise the wear a good fatty oil must be used. The bearings for such speeds should always be so constructed as to keep the surfaces well supplied with oil without wasting it. When this is done, mineral oil containing about 10 per cent. of fatty oil answers admirably, for there is then little wear, and the frictional resistance is small. Colloidal graphite added to mineral oils in proportion insufficient to appreciably alter the viscosity, has been found to greatly increase their lubricating value, enabling thinner oils to be used, reducing the quantity of oil necessary for lubrication, and producing a film of graphite on the bearing surfaces which enables the journal to run for a time after the supply of lubricant has been shut off. Ordinary natural graphite cannot be used at high speeds, as, when added in sufficient quantity to prevent abrasion, it increases the effective viscosity of the lubricant, besides having other disadvantages.

British Standard Classification of Pure Mineral Lubricating Oils.[1] -This classification has been issued as a broad guide to users of pure mineral lubricating oils, to enable them to describe their wants in a more precise manner than has hitherto frequently been done. The specifications are intended to be typical, and not detailed specifications of individual oils for specific requirements. In drawing up specifications for such oils, the typical specifications given in the schedule should, if necessary, be narrowed down to suit the particular purpose in view, and additional clauses added setting forth the

---

[1] Abstracted by permission of the British Engineering Standards Association from B.E.S.A. Publication No. 210, 1924—*British Standard Classification of Pure Mineral Lubricating Oils*, official copies of which can be obtained from the Secretary of the Association, 28 Victoria Street, Westminster, S.W. 1, price 1s. 2d. post free.

special characteristics required. The oils are grouped under four main heads as follows:—

Schedule A. Machinery and Engine Oils (Pale or Red).
„ B. Internal Combustion Engine Oils (Pale or Red).
„ C. Steam Cylinder Oils (Dark).
„ D. Steam Cylinder Oils (Red).

The terms "Light," "Medium," "Heavy," etc., have been adopted in accordance with the present-day commercial practice of grading oils in terms intended to indicate certain limits of viscosity, and they have no necessary reference to the specific gravity of the oil. The limits of viscosity attaching to the different commercial grades of oil are given in the columns headed "Nominal Viscosity." The viscosity values in these schedules are not expressed in absolute measure, but are the times of efflux of the standard volume of the oil from the Redwood Standard Viscometer at the temperature specified.

Types of Oil.—There is in existence a very great number of oils, many of which are interchangeable. It has been thought desirable to make the data wide enough to cover all pure mineral oils in extensive and efficient use.

As a first step towards simplification, a large number of oils have been classified into types based on physical and chemical properties, *e.g.* in the Machinery and Engine Oils (Schedule A), Type 1 indicates the type which is in general use when low cold-test is essential, and Type 3 is essentially the type necessary when the qualities of resistance to oxidation and separation from water are important, as in the case of turbines, closed crank cases, and circulating systems generally, especially where the temperature is high. The suitability of any oil for particular work has in the last resort to be determined by practical experience, but the types indicated by the simple physical tests given in the schedules are, according to common experience, those best suited for the corresponding work. These tests in themselves, however, are not to be regarded as ultimately limiting the range of products available; there may be new developments whereby oils of quite different test results may be rendered suitable.

It may be pointed out that when the viscosity of an oil is within the specified limits for one temperature, and either above the limits for a higher temperature or below those for a lower temperature, the oil can be regarded as fulfilling the requirements of a specification.

The data given in the schedules are based upon results obtained by the standard methods laid down by the Institution of Petroleum Technologists. Although it is recognised that when the time of efflux of 50 c.c. of oil from a Redwood Viscometer is less than 50 seconds or greater than 2000 seconds the results are almost meaningless, it has been convenient in this classification to allow a little latitude.

The uses of the various types may be indicated as follows:—

Machinery and Engine Oils. Type 1.—Oils of this type are useful over a very large range of engine and machinery work where the temperatures are not high, water is not present, and pump circulation is not used. Oils of this type fall most rapidly in viscosity with rise in temperature and they have the lowest setting-point.

Type 2.—Oils of this type are useful under any circumstances where fair demulsification properties are sufficient, resistance to sludging is moderate, and a low setting-point is not essential. This type has a good viscosity temperature gradient, and generally will lubricate heavier loads than Type 1 of equal viscosity at medium temperatures, *i.e.* about 100°–140° F.

Type 3.—Oils of this type possess the highest degree of demulsibility and resistance to sludging, and lose viscosity less than the others with rise in temperature. In special cases of extra-heavy loads and where compounded oils cannot be used, this type is often serviceable.

Cylinder Oils. Two types have been indicated where experience has shown each of them to be useful. Where the high specific-gravity oils or Western type oils cannot be recommended, no specification has been given.

Red Filtered Cylinder Oils.- Only one type has been specified, as this is practically the only one of proved utility for steam purposes.

Further Tests. The properties specified in the schedule, when tested in accordance with the I.P.T. standard methods, are all that are ordinarily required. In specifying for particular cases or for special oils, further tests may be added where reliable ones are known.

SCHEDULE A.

MACHINERY AND ENGINE OILS (PALE OR RED).

CLASSIFICATION			TYPICAL SPECIFICATIONS.						
Viscosity Grade.	Nominal Viscosity (Redwood) at 140° F. Seconds.	Type.	Specific Gravity at 60° F.	Closed Flash-point. ° F. Min.	Viscosity (Redwood). Seconds.			Cold Test to be below	Hard Asphalt.
					At 70° F.	At 140° F.	At 200° F.		
Extra-Light,	Up to 55	1	·910/·925	275	150/250	40/50	..	0° F.	Nil.
		2	·885/·910	335	145/180	45/50	..	32° F.	„
		3	·850/·865	350	140/150	45/50	..	35° F.	„
		4	·830/·865	250	60/130	..	..	35° F.	„
Light, .	55 to 75	1	·920/·935	315	370/550	60/75	..	0° F.	„
		2	·895/·920	360	325/500	60/75	..	32° F.	„
		3	·860/·885	380	240/300	60/75	..	32° F.	„
Medium, .	75 „ 125	1	·920/·940	330	695/1400	80/125	40/50	5° F.	„
		2	·895/·925	365	600/900	90/125	45/50	30° F.	„
		3	·870/·890	385	400/800	75/115	40/52	35° F.	„
Heavy, .	125 „ 175	1	·930/·940	330	1400/2500	125/175	45/52	15° F.	„
		2	·900/·930	370	1200/1400	130/155	50/60	35° F.	„
		3	·875/·890	390	800/1000	115/160	50/65	40° F.	„
Extra-Heavy,	175 and above	1	·935/·955	380	..	175/300	60/75	20° F.	„
		2	·910/·935	375	..	175/300	65/85	40° F.	„
		3	·880/·910	400	..	175/300	70/90	40° F.	„

NOTES.

EXTRA-LIGHT .	Types 1, 2, and 3 are suitable for light spindles, very light machinery, and machinery in rapid motion. Type 1 is specially suitable for refrigerator plants. Type 4 is for the lightest machinery, high-speed spindles, etc.
LIGHT . .	These oils are suitable for light machinery, spindles, shafting, and ring-lubricated bearings, etc. Type 1 is specially suitable for refrigerator plants. Type 3 is specially suitable for steam turbines.
MEDIUM . .	These oils are suitable for general machinery and engine purposes where a medium-bodied oil is required. Type 2 is specially suitable for electric motors and dynamos, etc. Type 3 is specially suitable for air-compressors and turbines and for use in closed crank-chambers.
HEAVY . .	These oils are suitable for heavy machinery. Types 1 and 2 are frequently compounded with fatty oils for use on open reciprocating engines. Type 3 is specially suitable for geared turbines and for use in closed crank-chambers, etc.
EXTRA-HEAVY .	These oils are suitable for the same class of work as the corresponding types in the Heavy grade, and are for use when a more viscous oil than those in the Heavy grade are required.

Schedule B.

INTERNAL-COMBUSTION ENGINE OILS (PALE OR RED).

Classification.		Typical Specification.						
Viscosity Grade.	Nominal Viscosity (Redwood) at 140° F. Seconds.	Specific Gravity at 60° F.	Closed Flash-point. ° F. Min.	Viscosity (Redwood). Seconds.			Cold Test to be below	Hard Asphalt.
				At 70° F.	At 140° F.	At 200° F.		
Extra-Light,	80	·890/·930	315	550/700	75/90	40/45	25° F.	Nil.
Light, . .	100	·890/·935	335	700/1200	90/130	45/55	25° F.	,,
Medium, .	165	·890/·935	340	1200/3000	130/185	50/70	35° F.	,,
Heavy, .	220	·890/·930	350	. .	185/260	65/80	35° F.	,,
Extra Heavy.	Above 260	·890/·920	375	. .	Above 260	Above 80	40° F.	,,

Notes.

The viscosity of an oil suitable for a specific engine is governed entirely by the design and condition of the engine. It is therefore impracticable to indicate particular grades for given types of engine, but as a general rule the Extra-Light, Light, Medium, and Heavy grades are used for all types of water-cooled internal-combustion engines, and the Heavy and Extra-Heavy for air-cooled engines.

Schedule C.

STEAM CYLINDER OILS (DARK).

Classification.			Typical Specification.					
Grade.	Nominal (Redwood) Viscosity at 200° F. Seconds	Type.	Specific Gravity at 60° F. Max.	Closed Flash-point. ° F. Min.	Viscosity (Redwood). Seconds.			Hard Asphalt. Per Cent. Max.
					At 140° F.	At 200° F.	At 250° F.	
L.P. Saturated Steam, .	Up to 160	1	·930	470	600/700	130/160	65/75	0·5
		2	·910	485	460/650	130/160	70/80	0·3
M.P. Saturated Steam, .	160/190	1	·935	480	750/900	160/190	75/85	0·5
		2	·910	510	650/750	160/190	80/90	0 3
H.P. Saturated Steam, .	190/210	. .	·910	510	750/925	190/210	85/95	0·4
H.P. Superheated Steam,	Above 210	. .	·915	535	900/1000	210/275	95/110	0·5

Notes.

Low Pressure Saturated Steam . suitable for pressures up to 100 lbs. per sq. inch.
Medium Pressure Saturated Steam suitable for pressures up to 150 lbs. per sq. inch.
High Pressure Saturated Steam . suitable for pressures above 150 lbs. per sq. inch.
High Pressure Superheated Steam suitable for use where the temperature does not exceed 700° F.

Schedule D.

STEAM CYLINDER OIL (RED FILTERED).

Specific Gravity at 60° F. Max.	Closed Flash-point ° F. Min.	Viscosity (Redwood). Seconds.			Cold Test to be below	Hard Asphalt.
		At 140° F.	At 200° F.	At 250° F.		
·898	500	485/585	130/155	65/75	45° F.	Nil.

Notes.

Only one specification is given, since it is considered that oils covered by the tests indicated will fulfil the demand where a red filtered oil is necessary for steam cylinder lubrication.

The Diesel Engine Users' Association have recently issued specifications for lubricating oils for use on heavy-oil engines. About thirteen samples of lubricating oil used by members of the Association were analysed, and the specifications in Table CLXII. were based upon the results obtained.

TABLE CLXII.—SPECIFICATIONS FOR LUBRICATING OILS FOR USE ON HEAVY-OIL ENGINES.

(Diesel and other High-Compression Types.)

	2- and 4-stroke cycle Heavy-oil Engines.	
	Specification A. 100 to 240 r.p.m.	Specification B. Above 240 r.p.m.
Specific gravity at 60° F. (water=1)	Not exceeding ·885.	Not exceeding ·882.
Closed flash-point, ...	Not below 400° F.	Not below 400° F.
Viscosity in Redwood seconds—		
At 70° F., ...	Not exceeding 1250.	Not exceeding 700.
At 200° F., ...	Not less than 56.	Not less than 50.
Cold test or pour-point, . .	Not higher than 35° F.	Not higher than 35° F.
Colour (by transmitted light), .	Clear red.	Clear red.

The oil shall be a *straight mineral oil.*
METHOD OF TESTING.—*Inst. Pet. Tech.*—No. tolerances allowed.

Lubrication of Miscellaneous Machines.—The spindles of small machines, such as *clocks, watches, and other delicate mechanisms,* are generally made of hard steel. They work either in agate or other polished mineral bushes, or upon hard brass or bronze. The speeds are generally very slow, and the lubrication "imperfect," *i.e.* of the solid film or "boundary" type. The pressures are also small, generally only a few pounds or ounces per sq. inch. The smaller spindles are carefully moistened with a fatty lubricant and put into position. The spindles then have the capillary spaces between them and their bearing surfaces filled with oil, which must often last for many months without renewal. The essential properties of a lubricant for such purposes are that it must be as free as possible from tendency either to gum or thicken by oxidation, or to corrode metal, and it must withstand exposure to temperatures as low as possible without becoming frozen or unduly thickened. The lubricants mostly used are porpoise and dolphin jaw oils, ben oil, hazel-nut oil, neatsfoot oil, sperm oil, and olive oil. The oil should be exposed for some time to a temperature rather lower than that to which the mechanism is likely to be subjected in use, and that portion of the oil which remains liquid should be separated by filtration and preserved for use. A little good mineral lubricating oil may with advantage be mixed with the fatty oil. Whatever oil be used, it should be proved by analysis to be genuine and free from excess of acid. The lubrication of clocks, watches, and such small machines require great skill and experience, and, unless there be no alternative, it should not be attempted by any but an expert. Oil should be applied sparingly. If too much be used, it is drawn over the plate and the pivot is left dry.

For *typewriting machines,* 0·890 Scotch mineral oil, or other mineral lubricating oil of similar viscosity is used.

For the *ring spindles of textile machinery,* which run in a bath of oil and at speeds as high as 10,000 or more revolutions per minute, mineral lubricating oils of low viscosity, not exceeding that of sperm oil at 60° F., are used, generally pure. *Mule and throstle spindles* require an oil of higher viscosity, say from two to three times that of sperm oil at 60° F. Pure mineral oil is frequently used, but a compounded oil containing from 10 to 20 per cent. of refined fatty oil is preferable, and is used in many cases. Mineral oils containing a small percentage of free fatty acid ("Germ Process" oils) are also used with good results in spinning mills (see p. 293). For *looms*, a mineral oil of still higher viscosity, about 1·5 times that of olive oil, is used. In cotton spinning, some manufacturers still use sperm oil, either alone or mixed with a limited proportion of mineral oil in order to reduce the tendency to gum. In woollen spinning, mineral oil of about the same viscosity as olive oil at 60° F. is used, also olive oil itself, according to the class of work. As all pure mineral oils cause objectionable stains on cotton or woollen goods, which can with difficulty be wholly removed, it is customary to use either pure fatty oils or mineral oils containing a large percentage of fatty oil, in all cases where the lubricant is liable to be splashed upon the fabric (see p. 583). For this reason, neatsfoot or lard oil is used for the lubrication of *lace-making machines*, but for some of the light bearings of lace-making and silk-weaving machines where oil is objectionable, graphite is used.

For *light sewing-machines, and other kinds of delicate machinery running at high speeds*, mineral lubricating oil is used having about the same viscosity as, or even less than, that of sperm oil, preferably mixed with from 10 to 20 per cent. or more of sperm oil.

For *heavy sewing-machines, printing-machines, machine tools and other general machinery, shafting, etc.*, a mixture of mineral oil with from 10 to 20 per cent. of animal or vegetable oil is suitable, the viscosity of the mineral oil employed depending upon the class of machine. The heavier the machine and the slower the speed, the greater the viscosity needed. Animal oils as a class are preferable to vegetable oils in such mixtures, because they are less liable to gum; and for the same reason the larger the proportion of mineral oil which can be used the better, provided the bearings are efficiently lubricated and run cool. Among the vegetable oils, neutral coconut-oleine is one of the least oxidisable. Sometimes other considerations, such as fluidity at low temperatures or cheapness, are of paramount importance, and lead to the employment of vegetable oils like rape, which are somewhat readily oxidisable.

Dynamos and Motors with bath or ring lubrication are lubricated with mineral oil having from two-thirds to about three times the viscosity of rape oil at 60° F., according to the power, weight, and speed of the machine. The mineral oil is preferably used pure.

For *turbine bearings* (*forced or circulating pump lubrication*) pure mineral oil is used having a viscosity ranging from one to three times that of refined rape oil at 60° F. The tendency is to use comparatively thin oils, even for very heavy turbines, for two reasons, first because the thinner oils maintain their viscosity better than the more viscous ones at the comparatively high working temperatures sometimes reached (120°–130° F., or even higher), and secondly, on account of the very high speed of the turbine. One of the most important properties which a turbine oil should possess is that of separating readily from water; as leakage of steam occurs in most steam turbines, it is of great importance that the mineral oil used shall readily separate from, and not emulsify with, the condensed water (see p. 274). As the oil with use becomes dirty and emulsifies more readily, it should frequently be removed and filtered.

For the *forced lubrication of high-speed engines*, pure mineral oil of about twice the viscosity of rape oil at 60° F. is suitable. It is important here also that the oil used should separate readily from water, and be filtered easily whilst in circulation.

For the *splash lubrication of high-speed steam engines* (*Willans' type*) charcoal filtered mineral cylinder oil of medium viscosity, mixed with a very little (2 or 5 per cent.) of lard oil, answers well. The same oil should be used for the cylinders of the engines. The proportion of oil to water in the bath should be about one to ten. Soft water should be used.

The *railways* of the British Empire use for the lubrication of their locomotives chiefly mineral oil, either alone or mixed with vegetable or animal oil. The Southern Indian Railway uses for some purposes unmixed castor oil, and for express passenger engines one British railway uses a mixture of 75 per cent. rape oil and 25 per cent. mineral oil; these are exceptions to the general rule that the oil employed is either a straight mineral oil or a compounded oil, in which the percentage of mineral oil is not less than 75. The Canadian National Railways use a compounded oil containing a small proportion of whale oil and lead oxide. Some of the railways vary the composition of the oil according to the season, these railways being those which have to contend with severe variations in climatic conditions. For the axle-boxes of coaching stock most of the railways use a straight mineral oil, but a few use a compounded oil, and one Indian railway uses castor oil. The viscosities of the oils used vary considerably, but this is not surprising when the climatic and seasonal differences are taken into account along with the varied working conditions. In Great Britain and Ireland the oils used range in viscosity at 40° C. (104° F.) from 254 to 550 seconds Redwood. On the Indian railways the viscosity of the mineral oil used corresponds with an efflux time of about 1100 seconds. The general practice on American railways is to use mineral oil exclusively; in some cases a mineral oil with 3 to 5 per cent. lead-soap base is used, and two railways mix 2 per cent. of rape oil with the mineral oil. The general practice is to vary the viscosity of the oil used according to the season of the year for locomotives, but not for cars.

The practice on railways foreign to the British Empire and America is to use mainly mineral oil, but compounded oils are used by some railways when vehicles are lifted or specially oiled, and it is also the practice on some railways to issue castor oil to drivers of fast trains, for use in cases of hot bearings.

For *marine engine motion, and machinery working in hot places*, mineral oil is used in admixture with a blown or thickened fatty oil, the latter oil forming from 20 to 33 per cent. of the mixture. The viscosity of the mixed oil at 100° F. ranges from about half to three-fourths that of castor oil at the same temperature.

For the *lubrication of steam-engine cylinders*, heavy mineral cylinder oils should be used, either alone or compounded with a small percentage of fatty oil, always endeavouring to reduce the proportion of fatty oil to the lowest proportion necessary to ensure efficient lubrication. In some cases, pure mineral oil must be used, or no oil at all, as in the cylinders of marine and other engines working with surface condensers the water from which is returned to the boilers. In such cases it would be dangerous to use a compounded oil, unless the condensed water were completely freed from oil before being returned to the boiler. Lubrication is improved by mixing a small quantity of graphite with the cylinder oil, but unless the mixture be kept continually stirred ordinary graphite settles out and causes trouble. The K. & W. Graphiter, described on p. 476, has been specially designed to feed such mixtures. No special lubricator is needed if colloidal graphite in the form of "oildag" be mixed with the cylinder oil. This prepared graphite remains suspended in the oil while it is being fed into the cylinder, and gradually produces upon the friction surfaces a film which greatly reduces the friction and also improves the fit between the piston rings and the cylinder. A large reduction in the quantity of oil needed for lubrication is said to be thus effected (see p. 185). Chapman & Knowles have patented a mixture of ordinary graphite and glycerin for the lubrication of steam-engine cylinders. The graphite is impregnated, before mixing it with the glycerin, with a sufficient quantity of petroleum or other hydrocarbon insoluble in glycerin to reduce the specific gravity of the mixture to that of the glycerin, thus causing it to remain in suspension. Special advantages are claimed for this "oil-less" lubricant in cases where the condensed water of steam engines is used for feeding boilers. For lubricating the cylinders of engines using *superheated steam*, mineral oils of high viscosity and low volatility must be used. The characteristics of typical oils used for this purpose are given in the table on p. 387. In Miller & Bennet's system,[1] dry Acheson graphite is used, which is blown into the cylinder from a special lubricator by a jet of high-pressure steam from the boiler after the main supply has been shut off and whilst the steam is expanding in the cylinder. For further remarks on steam cylinder and valve lubrication see p. 583.

For *gas-engine cylinders* an oil very largely used is a mixture containing, approximately, 90 per cent. of mineral oil and 10 per cent. of neutral fatty oil, the viscosity of the mixture being about the same as that of rape oil at 60° F. In the working of these engines carbonaceous deposits are liable to be formed by partial combustion of the lubricant, especially when used in excess, which not only foul the cylinders and passages, but, with high compression, frequently cause troublesome pre-ignition of the explosive gases. For this reason, the mineral oils selected for lubrication should be such as have undergone very careful rectification and show the least tendency to decompose and deposit carbon when heated. They should also be oils of low volatility, *i.e.* not losing appreciably by evaporation at working temperatures; and it would certainly appear desirable to exclude as far as possible any admixture of fatty oils, seeing that these are not capable, as are the mineral oils, of being volatilised without decomposition. The use of pure mineral oils of suitable viscosity and low volatility has been found to give excellent results in the authors' experience with some gas engines, as well as being cleaner in use and cheaper than mixed oils. The general practice, however, seems to be to use blended lubricants of moderate viscosity for gas engines, and the late Mr. Veitch Wilson informed us, as the result of his extensive practical experience, that many *oil engines* can only be run with either pure fatty oils such as olive, lard, or neatsfoot, or with mixtures largely composed of such oils, and that no injurious effects result from their use.[2] The lubrication of gas engines is very fully dealt with by T. C. Thomsen.[3]

The deposits which are found in gas- and oil-engine cylinders are not always formed wholly from the lubricant. A deposit of so-called "carbon" may sometimes be due to incomplete combustion of the gas or oil vapour, if the air supply is deficient; sulphur and compounds of sulphur, not infrequently met with, are derived from the fuel. We give analyses of three deposits, two taken from the pistons of gas engines, and one from a gas-valve chamber, which have come under our notice. The first was from an engine lubricated with a dark Russian mineral oil, and is a typical gas-engine cylinder deposit.

---

[1] The "Cromil" Engineering Co., Newcastle-on-Tyne.

[2] See a lecture on "The History and Practice of Lubrication in Marine Engines," *Trans. Inst. Marine Eng.*, xxii. (1911), p. 495; abs. in the *Mechanical Engineer*, xxvii. (1911), p. 522.

[3] *The Practice of Lubrication*, 1920, pp. 466–471.

Non-oily organic matter (chiefly carbon),	59·8
Oily and resinous matter,	26·3
Sulphur (free),	0·1
Ferric and ferrous sulphates (soluble in water),	1·1
Ash (chiefly ferric oxide),	11·1
Water,	1·6
	100·0

The second was from an engine lubricated with a pale American mineral oil. The ammonium sulphate was due to imperfect washing of the gas.

Non-oily organic matter,	58·4
Oily and resinous matter,	17·1
Sulphur (free),	0·8
Ammonium sulphate, etc., soluble in water,	12·7
Ash (chiefly iron oxide),	8·5
Water,	2·5
	100·0

The third, found in the gas-valve chamber of a gas engine, was remarkable in containing 50 per cent. of free sulphur, clearly derived from the fuel. It contained:

Free sulphur,	50·0
Oil soluble in ether,	17·0
Combined fatty acids, dirt, etc.,	13·0
Ash (chiefly iron and copper oxides),	15·0
Water,	5·0
	100·0

The lubrication of *motor cars* is a special case of the lubrication of high-speed gas and oil engines and machinery. The oils used must be selected for petrol engines on the same principles as for gas and oil engines, *i.e.* carefully rectified oils from good crude petroleums must be used, not readily decomposed by heat, and not losing appreciably by evaporation at working temperatures. Whether the mineral oil be used alone or mixed with fatty oil, and what proportion of fatty oil should be added, must depend upon the conditions which obtain in the particular engine. For the machinery of motors lubricated on the circulating pump system, where the oil is drained from the bearings into a reservoir, filtered and used again, the lubricating oil should be pure mineral oil of no greater viscosity than is needed to keep the bearings cool; any viscosity in excess of this involves increased friction and waste of driving power. Motors lubricated on the drop sight-feed system should be supplied with a mixture of mineral oil and fatty oil. For certain bearings, grease cups are used, and for these care should be taken to select greases which melt at a suitable temperature and do not separate, *i.e.* the oil in the grease must not run down and leave the soap in the cup, but the grease must melt as a whole. Much practical information relative to the lubricants found most suitable for the very numerous types of gasoline, petrol, and kerosene oil engines used for automobiles, aircraft, tractors, etc., as well as for land and marine Diesel engines, is given by Thomsen.[1]

For the cylinders of *steam motors* fitted with flash boilers like the "Serpollet," the "Miesse," or the "Clarkson," charcoal-filtered mineral cylinder

---

[1] *The Practice of Lubrication*, 1920, pp. 472-532.

oils are preferred. For those fitted with multi-tubular boilers, like the "Locomobile," "White." or "Duryea," natural mineral oils of high flash-point are used.

For *steam lorries, traction engines*, etc., which work at high pressures, exhaust direct to the atmosphere and, as one maker says, "cough" the cylinder oil out with every stroke, heavy dark oils are good enough, used pure for superheated and mixed with rape oil for saturated steam. For the splash lubrication of the engines of all steam motors and lorries pure mineral oils must be used, to avoid emulsification with water.

As regards the *air-compressors* of Diesel engines, reference should be made to the report issued by the Diesel Engine Users' Association.[1] The following properties are recommended as necessary in all lubricating oils for Diesel Engine Compressors: —

(*a*) The oil should be entirely free from suspended particles of water.

(*b*) The oil must be entirely free from sand or other inorganic material. No mechanical impurities must be visible in the oil when it is viewed by holding a sample in a glass vessel against a light.

(*c*) The oil must be entirely free from inorganic acids.

(*d*) Oils should not be lower in viscosity than 300 seconds Redwood at 70° F., nor higher in viscosity than 3000 seconds Redwood at 70° F.

(*e*) Oils should in no case be lower in closed flash-point than 350° F.

(*f*) If the oil is to be used on an enclosed crank-case high-speed engine, in which the same lubricant is used both for the compressor and in the crank case, it should have a closed flash-point of not less than 400° F.

The Committee state that the oils which have met with most success in Diesel engine air-compressor lubrication, besides complying with the foregoing conditions, have generally possessed properties lying within the following limits:—

Specific gravity, 0·870 to 0·915 at 15° C.
Efflux time (Redwood) at 70° F., 400 to 1000 seconds.
" " " at 140° F., 75 to 125 seconds.
Flash-point (closed), not below 400° F.
Colour, red or yellow by transmitted light, and clear (not misty or smoky).

Both straight mineral oils and compounded oils containing *small quantities* of saponifiable oil have met with success in Diesel-engine compressors, but the majority of successful oils have been straight mineral oils.

The *ball bearings and chain pins of cycle and motor vehicles* work under heavy pressures and comparatively slow-rubbing speeds, for the slip of the contact faces of the balls upon their bearing surfaces is very small. The conditions under which slip takes place in such cases, and the part played by the lubricant, are discussed on pp. 119 and 120. Here we are concerned rather with wear than friction, and such friction as exists is low speed. On this account a good neutral animal oil or fat, pure or mixed with a fairly viscous mineral lubricating oil, is the most suitable.

The *chain* of a cycle or motor, both as regards the friction of the pins and of the links on the teeth of the wheel, works under conditions which require a good grease or a good fatty oil. Sperm oil mixed with a little petroleum jelly to thicken it, and with graphite to keep the surfaces from grinding if they should become a little dry, answers well for cycle chains. Rangoon jelly mixed with graphite (Price's "Rangraphine") also gives good results and lasts well. Excellent results are also obtained by running the chain through

---

[1] *Air Compressor Explosions and Troubles*, Report of the Committee, April 1921, price 2s.

a bath of pure sperm oil, or a mixture of good mineral oil with a little refined animal oil, which is held in a suitable case secured to the machine. Pure mineral oils seem quite unsuitable, as with them the bearing surfaces are apt to wear unduly. Except where an oil-bath is used, a thick oil or grease is necessary for the chain, as a thin liquid rapidly runs off. If properly protected from dirt and dust and suitably lubricated, a cycle chain ought not to require tightening up more than once or twice in a year. For motor chains, a neutral animal fat or good neutral grease (soap-thickened oil) mixed with graphite is recommended, such as Price's "Cirogene," which is a lubricant of this nature further stiffened by the addition of wax. Greases for ball bearings and gears made with Acheson graphite, "Grade 1340," of 99 per cent. guaranteed purity, have been put upon the market.

For *very heavy bearings*, unctuous solids, such as soapstone, graphite, asbestos, etc., are sometimes used as lubricants. They cannot easily be squeezed or scraped from between rubbing surfaces, and are, consequently, suitable where very great weights have to be carried on small areas, and where the speed of rubbing is not high Indeed, some solid lubricants will sustain, without injury to the surfaces, pressures under which no liquid ones would work. As a rule, the bearing surfaces are made of exceedingly hard materials. Between cast-iron surfaces, graphite has been found to give good results. T. Shaw found it to be superior to oil for the tables of heavy planing machines. In experimenting to find a suitable lubricant for the journals of a heavy swing-bridge working under a pressure of 3555 lbs. per sq. inch, the P. L. & M. Railway of France found paraffin the best lubricant. It maintained a film under pressures which forced oil and petroleum jelly completely, and fat almost completely, out of the bearing, and gave by far the lowest coefficient of friction.

For the *hot necks* of rolls, pitches of various kinds are used, alone or mixed with heavy mineral lubricating oils, or the latter may be thickened with soap, etc.; see p. 175.

Hydraulic Machinery.—In hydraulic machinery many of the rubbing surfaces of the spindles, valves, etc., are in a great measure bathed in water, and such lubricants as can be used for them must be carried by the water. When the same water is used over and over again, mixed with as much fresh water as is necessary to meet the waste due to leakage through glands, etc., it is treated in the tank from which it is pumped and into which it is returned from the machines. In such cases, soft soap alone appears to be the best lubricant, but a little mineral or fatty oil may be added. The soaps formed in or added to the water concentrate upon all the surfaces with which the fluid comes into contact, and form very tenacious films, which prevent the cutting and grinding of the valve faces.

When the water is obtained from street mains, and is passed after use into the drains, the lubricator is generally added drop by drop by means of a lubricator actuated mechanically by the hydraulic machine. The rate of supply is thus regulated in accordance with the volume of water passing. When the pressure is below 750 or 800 lbs. per sq. inch, a mixed mineral and animal oil answers well, but for higher pressures soft soap is a better lubricant. Hydraulic rams, slides, guides, etc., in cool climates, may be lubricated with tallow, provided it be free from acidity, as this lubricant does not alter much at ordinary temperatures.

Nuts, Keys, etc.—To enable nuts, boiler wash-out plugs, keys, etc., to be easily placed in position, and removed again after standing, it may be for months or years, in warm places, a lubricant is required which keeps its nature and does not evaporate, corrode, or otherwise injure the metallic surfaces. For such purposes, tallow or other fat, oil, or greases containing them, should on no account be used. No doubt they make the nuts, etc., work freely in the first instance, but in a very short time the fat undergoes a change which effectually corrodes the surfaces together. Even a mineral oil, although it does not set up corrosion, flows out of the joint in the course of a few hours when heated, evaporates, and leaves the surfaces free to "bind." To prevent this, the best plan is to make use of a lubricant consisting of a thick mineral cylinder oil or petroleum jelly mixed with graphite or mica. Here, even if the fluid or semi-solid portion of the lubricant should be driven out of the joint by capillary forces, the graphite or mica remains in the joint, keeps the nuts, etc., free, and enables them to be easily tightened or taken off at any time without risk of breakage or damage.

There are, however, cases where no lubricant must be used, such, *e.g.* as the nuts of the bolts securing fish-plates to rails, which, if lubricated, would be apt to slacken back. The same may be said of the bolts securing many of the parts of machines subject to vibration.

Boiler Fittings. -The valve spindles, valves, etc , of fittings attached to steam boilers are apt to work rather stiffly owing to the difficulty of lubricating them, and the rapidity with which most lubricants leave the heated surfaces. For them the mixture described above for nuts, etc , answers well, the lubricant in all cases being a mineral cylinder oil or grease containing a lubricating solid such as graphite or talc.

The glands of low-pressure boiler fittings may be packed with hemp or jute soaked in paraffin-wax containing French chalk or graphite *The soft solid lubricant should on no account be a fatty oil or grease.* Such lubricants attack the metallic surfaces with which they come into contact and cause the glands to leak. For high pressures, or in very hot positions, the hemp must be replaced by asbestos cord or metallic packings.

Some enginemen have adopted the practice of putting oil, or the waste water from their cylinder lubricators, into steam boilers, either through the injectors or into the feed water. This practice is one which should *not* be adopted under any circumstances, for the acids thus passed into the boilers or formed there by decomposition of the fatty oil which some cylinder lubricants contain, give rise to or seriously accelerate the rate of corrosion which often results from the strains set up in the metals by changes of temperature, etc. Lubrication effected in this way not only endangers the lives of those who adopt the plan, but is sure to seriously shorten the life of the boiler, especially if the water be soft. If the water be hard, greasy deposits are formed, which are apt to cause overheating and collapse of flues, etc.

Cutting Tools.—The cutting edge of a tool, such as that used for a lathe, drill, slotting, or other machine, is, owing to its hardness, enabled to embed itself in the softer metal. When the metal is being worked, especially if it be a tough one, heat is developed, not only owing to the friction against the tool, but also owing to the distortion suffered by the strip cut off. A large proportion of the heat developed distributes itself in the mass of the metal, while some of it spreads to the tool, raising its temperature and occasionally seriously injuring its temper. To prevent this, a stream of liquid is directed against the tool. Water is generally used, but owing to the rapidity with which clean water rusts clear iron surfaces, it has to be mixed with soap of some kind, which also acts as a lubricant.

At the cutting point there is often actual metallic contact, and the friction is mainly that of an unlubricated surface, *i.e.* the friction decreases with increasing speeds of cutting. The increase of speed consequently decreases the load on a drill, although the heat produced may be somewhat greater. On this account it is well, should a drill break, to first try a higher rather than a lower speed, unless the heating effect produced be already too high to admit of such a change.

In many shops the speeds of machines are lower than they need be, for it is sometimes assumed that breakages can only be prevented by running at low speeds. Mineral oils, being deficient in oiliness, are not suitable for high-speed tools, which require good lubrication. Fatty oils, such as lard oil, or a mixture of soft soap and soda, from 14 to 16 lbs. of each to 100 gallons of water, are greatly superior. The water, having a high specific heat, keeps the tools cool, whilst the soap and soda improve its lubricating qualities as well as prevent the surfaces from rusting. The composition of various liquids used for the lubrication of cutting tools is dealt with fully in Section F of Chapter VI. on pp. 166 169.

W. Rosenhain and A. C. Sturney[1] have studied the action of cutting tools by the microscopical examination of cross-sections taken through chips in process of formation. Their experiments were made without the use of lubricants, and afford a new insight into the mechanism of cutting-tool action. By using a simple type of cut and varying only two factors, namely, depth of cut and top-rake angle, certain definite regularities of behaviour have become manifest They found that according to the conditions of cutting the separated metal takes the form of three distinct types of cutting, or "chip." In the first of these types, which has been termed the "tear" type, rupture of the metal occurs by the formation, well in advance of the nose of the tool, of a *tear* or *crack* tending to run inwards from the periphery of the stock. This type is shown in fig. 254. Since such a tear cannot, obviously, progress very far, a succession of fresh starts are made by the tool, and the surface of the work is left in the form of rough projections. When the conditions are changed, by either reducing the depth of cut or increasing the top-rake angle, or both, the ultimate result is the formation of the third type of chip, which has been called the "flow" type, but under intermediate conditions an intermediate type of chip is formed which has been termed the "shear" type. In the formation of the flow type of chip, the principal movement occurs, without actual fracture, in a direction at right angles to the plane of shear, and usually takes the form of a continuous spiral ribbon; this is definitely associated with the smoothest-cut surface and the closest agreement between intended and average depth of cut.

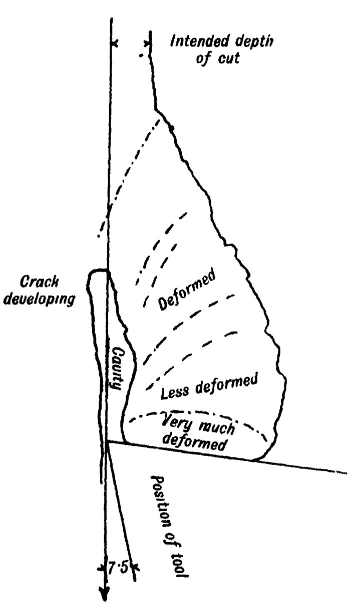

FIG. 254.

Rosenhain and Sturney consider that the best results in cutting (without using a lubricant) in regard to the removal of the maximum amount of metal per unit distance of tool travel, the least irregularity of surface, the closest agreement between intended and actual depth of cut, and the minimum wear of tool, is obtained by using a top-rake angle a very little smaller.

C. G. Coker[2] finds that, when the tool is lubricated, the distorted area,

---

[1] *Proc. Inst. Mech. Eng.*, 1925, pp. 141–174.

[2] *Ibid.*, p. 367.

instead of extending below the cutting as shown in the cavity (fig. 254), rises above the cutting edge. It is clear that when the cut is deep the lubricant enters the cavity and an adsorbed film covers the cavity walls. As the point of the tool enters the cavity, the metal chip rising and flowing along the tool face is lubricated. This enables the chip to get away more freely, and has the same effect as increasing the rake of the tool, without encountering the disadvantages inseparable from the latter plan. The result of lubrication is that the cavity is directed *above* the cutting edge of the tool, the cut surface is a smooth one, and the driving force required is smaller. The size of the cavity in front of the tool automatically adjusts itself to lubricate properly the tool face.

Staining of Fabrics. The lubricants used for the bearings of textile machinery are liable to be thrown about by the rapid motion of the spindles, shafts, etc., and, falling upon the cotton or woollen goods, produce more or less objectionable stains. Every care is, of course, taken to prevent this splashing of the lubricant, but as it cannot be altogether prevented, and is apt to spoil the appearance and reduce the market value of the cloth, endeavour is made to use lubricants which either stain very little or give stains which are easily removed. Pure mineral oils will produce objectionable stains which can with difficulty be wholly removed, for they sink into the fibre and carry with them the fine metallic powders ground off the bearings. On this account, even though the oil be clean and colourless before use, and be apparently completely removed in the scouring, the chemical changes which the metallic powders undergo sooner or later, sometimes months later, produce stains of various colours in the finished goods. Stains produced by the oil thrown from heated bearings are found exceptionally difficult to remove, especially if the stained goods have lain in stock for two or three months. When such goods are bleached, the fabric is often found to have become rotten, and a hole makes its appearance where the stain had been.

Animal and vegetable oils are much less liable to produce permanent stains than mineral oils, for, being saponifiable, they are almost wholly removed in the various dressing processes the fabric has subsequently to undergo. With them may be mixed from 25 to 30 per cent. of mineral oil without producing any marked effect upon their staining qualities. With mineral oil in larger proportion, however, the results are not satisfactory.

The colour of these stains depends upon the metals of which the rubbing surfaces are made. Iron produces a red stain, whilst copper or brass stains are grey, greenish, or black.

One of the most usual, as well as one of the most effective, methods of dealing with mineral-oil stains in cotton goods is to impregnate them with olive oil or oleine (crude oleic acid), allow half an hour for the oil to thoroughly permeate the stained part, and then boil the goods in a caustic soda lye for six or eight hours. Olive oil is more efficacious than oleine; and if, before boiling, the fabric is well scoured with soap and a little carbonated alkali, the mineral oil stains are more thoroughly and easily removed than when boiled in the keir at once. In the case of dyed and finished fabrics which cannot be wetted again, benzene, which dissolves the mineral oil, can be used.[1] The solvent should be applied first in a ring all round the spot, and gradually brought nearer to the centre, and a fibrous substance, such as blotting-paper, used to absorb the oily solution which is driven to the centre. If the solvent be applied to the oily spot direct, the grease is caused to spread into the fabric.

Steam Cylinder and Valve Lubrication.—*Imperfect Nature of.*—Although

---

[1] Pentecost. *Jour. Soc. Chem. Ind.*, 1897, p. 409.

it is possible so to lubricate the cylinders and valves of a steam engine that there shall be no excessive wear, it is impossible to obtain anything like the results, so far as friction is concerned, given by a well-lubricated journal. The pistons and valves move to and fro in straight lines, and do not tend to place themselves automatically in such positions as to trap the oil properly and keep the surfaces from touching. Neither can the large extent of surface exposed be kept flooded with the oil, the passage of live steam through the valve-chest and cylinders not admitting the presence of large quantities of oil. We have, therefore, to be content with the presence of a lubricating film of no great thickness, and either make the loads on the bearing surfaces small or cause them to move somewhat slowly.

For a proper understanding of the conditions under which the efficient lubrication of steam-valves and cylinders takes place, it is necessary to consider at some length the physical properties both of the lubricant and of the steam.

Evaporation of Oil.—Even at ordinary temperatures, water, when in a dry atmosphere, evaporates, the vapour mixing with the air and making it moist. Such evaporation goes on until the air is saturated with moisture. Somewhat similar conditions occur at the free surface of a mineral oil. Such oils slowly evaporate until their vapours saturate the air or steam in contact with them. With ordinary bearings at ordinary temperatures there is very little loss by evaporation, when oil of good quality is used, but at the high temperatures of steam cylinders serious loss may occur, for not only is the tendency to evaporate increased, but the oil vapour is rapidly carried off with the great volume of steam passing through the exhaust. On this account, mineral cylinder oils should be carefully tested for volatility, as directed on p. 258, and all that are unduly volatile rejected.

Decomposition of Lubricants.—Vegetable and animal oils are unsuitable for cylinder lubrication, as, in contact with steam, at the high temperatures to which they are subjected, they undergo a chemical change resulting in the formation of free fatty acids (p. 287) which may give rise to very serious corrosion. In many instances the use of such fatty lubricants has resulted in the cylinder metal being rendered quite spongy or porous in the course of a few years: bolts, valve-spindles, studs, and other parts have been cut quite through, and cylinder joints, etc., rendered leaky.

The steam passages also become choked with metallic soaps, oxides of iron, and free carbon, resulting from the chemical action of the fatty acids upon the cylinder metal and the destructive decomposition effected by heat and high-pressure steam. In locomotives the oil thrown against the hot blast-pipe, and even that adhering to the ports, undergoes destructive distillation, with formation of a carbonaceous deposit, which accumulates and gradually blocks up the passages. A partial analysis of such a deposit, scraped from a piston head, is given below.

Fixed carbon, ...	35·37
Hydrocarbons soluble in ether, ...	7·52
Neutral fatty oil, ...	3·07
Fatty acids, free, and combined with metallic oxides, . .	2·52
Ash; chiefly oxides of iron, with small quantities of copper oxide, lead oxide, etc., ...	44·85
Moisture, ...	2·21
Undetermined and loss, ...	4·46
	100·00

Fatty oils, however, when mixed with mineral oils, in quantities not exceeding 5 to 20 per cent., do not seem to produce these objectionable results so readily; indeed, the lubrication of parts which have to carry very heavy loads is greatly improved by the addition of such oils.

When surface condensers are used, and the condensed water is again passed into the boilers, great care must be exercised to prevent the passage into the boilers of the oil used for the lubrication of the cylinders. Animal and vegetable (fatty) lubricants must not be used in such cases, even in small quantities, for the acids liberated by the action of heat and water-vapour pass into the boilers and cause serious corrosion and other troubles. These acids cannot be separated from the water by merely allowing it to rest for a time in a tank, they remain to a large extent suspended in the water, giving it an opalescent appearance. Mineral oil also remains suspended in condensed water in a very fine state of division, and even though a considerable quantity may rise to the surface and be removed, sufficient may remain in suspension to produce very serious effects upon the flues. Indeed. its presence may so check the passage of heat through the boiler plates as to cause them to collapse. When the water is passed through an efficient filter before entering the boiler, and is thereby made bright and clear, no corrosive action appears to take place, the grease, etc., being for all practical purposes eliminated.

The deleterious effects produced by the action of a lubricant on marine boilers, when surface condensers have to be used, have led to marine engines being run without any direct lubrication whatever of their steam-chests or cylinders, though a certain amount of oil finds its way in from the swabbing of piston-rods, etc. This can often be done without any very serious wear taking place, for the load on the rubbing surfaces of many well-designed engines is very small, but with new engines slow speeds must be adopted to begin with, and the surfaces allowed to "burnish" and acquire hard skins. For remarks on the use of graphite in cylinder lubrication, see pp. 186, 576, and 577.

Application of Cylinder and Valve Lubricants. -Even when the lubricant used for steam cylinders is a good one, it is sometimes found that the parts are imperfectly lubricated. This may arise from several causes, most of which, however, can be traced to superficial tension phenomena.

It has already been explained that water will not touch the oiled surface of a solid, although the relative superficial tensions of metal, oil, and water are such that the latter has a greater affinity for the metal than oil has. But oil cannot be readily removed from a metallic surface by water, for the oil is nearly insoluble, and evaporates very slowly. On the other hand, water may be readily replaced by oil, owing to the facility with which the water evaporates and leaves a comparatively clean surface for the oil to cover. The superior affinity of a metallic surface for water rather than oil is also shown by the rapidity with which water will displace the oil from a bearing where there is abrasion going on, and will cause it to run hot. The presence of water in a steam-cylinder or steam-chest is consequently deleterious. The friction of the faces rubs off the oil, and if water be present in bulk, it covers the surfaces, and if the loads be heavy, they grind and tear in the absence of a lubricant. This can be prevented to some extent by adding colloidal graphite to the lubricant, by which means a film of graphite is gradually formed upon the friction surfaces.

The condensation which takes place in a long steam-pipe will often send so much water into the engine cylinders that lubrication becomes impossible. To prevent this, separators are fitted so as to dry the steam before it is used. A vertical exhaust-pipe not fitted with a drain-pipe to carry away the water will also cause wear and tear of the valves, for the water condensed in the cylinders cannot get away freely. Difficulty is often experienced when valves are placed on the top of the cylinders, for the water in the cylinders and steam-chest cannot escape, but remains on the cylinder bottom and the valve faces.

The D valves of non-compound high-pressure engines, especially when not balanced, press very heavily upon their faces, but the stroke being small, and the speed of rubbing low, the heating effect is not large. The pressure upon them, however, is so great that where at their ends there is any considerable length of valve-seating which, owing to the short stroke, is not exposed to the steam, the surfaces are apt to grind and tear. To ensure the proper lubrication of this part of the valve face, grooves may be cut in it, as shown in fig. 255. The addition of colloidal graphite to the lubricant may be an advantage in this case also.

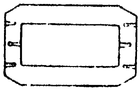

FIG. 255.

We have in a previous chapter described one or two forms of lubricator designed to introduce steadily a lubricant into the steam spaces without entailing loss of either steam or oil. Such a lubricator is generally placed above the point where the steam-pipe enters the steam-chest. It must not be placed above the main steam-valve, for when the engine is not at work, the steam-pipe may become filled with condensed water and the lubricator allowed to feed into it. Rising up the water-logged steam-pipe the oil will flow into the boiler, and may cause serious injury there. The pipe conveying the oil from the lubricator should be carried well into the steam-pipe, so that the lubricant may be delivered into the rapid current of steam and not allowed to run down the sides of the pipe. Indeed, it is a good plan to carry the oil-supply pipe right across the steam-pipe, and allow the oil to escape through a number of side perforations. When this is done, the oil escapes at several points, is well distributed over the column of steam in the steam-pipe, covers the surface of each particle of water passing with the steam, or is carried as spray to all parts of the steam-chest. The water particles, being covered with a pellicle of oil, then lubricate instead of merely wetting with water the surfaces upon which they impinge.

CHAPTER XV.

THE CLARIFICATION AND RECOVERY OF USED LUBRICATING OIL.

THE lubricating oil used in internal combustion engines, enclosed-type steam engines, steam turbines and all kinds of engine and machine bearings having pump lubrication, gradually becomes charged with particles of dirt and metal, carbonaceous particles, asphaltic matter and water, and must be withdrawn and freed from these impurities from time to time, or thrown away. The oil which drips or is thrown from the bearings of ordinary steam and gas engines, shafting, etc., and is or should be collected by placing splash-guards and drip-tins in suitable positions, also becomes charged with dirt and needs purification. All this oil, if purely mineral or only slightly compounded, can be recovered and used over and over again, and even some of the more heavily compounded oils can be dealt with in the same way, though to a more limited extent.

The imperative need of economy and the avoidance of waste in all branches of industry, owing to the high cost and in some cases the increasing cost of materials, makes the recovery of used lubricating oil a subject of great importance to all power users. The cost of lubricating oil in relation to the cost of fuel may be comparatively small, but in the gross it is a considerable item. Mr. A. Duckham recently stated that he had worked out some figures for power plants and had found that one ton of lubricant was required to lubricate the machinery for the power developed by 400 tons of fuel. It has been estimated that before the war the annual expenditure on lubricants in this country amounted to £6,000,000. In 1921 the cost of the lubricants used by railways in this country had increased from three to four and even more times compared with the prices ruling in 1913. Mr. H. M. Wells in the discussion on Mr. Wilson's paper referred to below [1] stated that in 1920 the cost of Pennsylvania crude oil was over six times that of pre-war days, and still rising; the price of spindle oil was five times, that of engine oil six times, and that of cylinder oil seven to eight times higher than the average prices in 1914.

It is fortunate that the lubricating oils chiefly used to-day lend themselves to recovery so much better than the older lubricants. The vegetable and animal oils formerly used gradually absorb oxygen, develop acidity, and become thickened and changed throughout their mass beyond recovery. The mineral lubricating oils used to-day are far less liable to oxidation, develop less acidity and less harmful acidity, and the most objectionable products of their oxidation and decomposition, as well as the dirt and other suspended impurities, can be removed from the oil by a simple process of filtration.

In a paper read before the Diesel Engine Users' Association in October 1920,[1] the author divided the commercial plants in general use for the purification of used lubricating oil into the following classes, viz.: -

1. Those in which the oil is merely allowed to settle, with or without warming.

---

[1] *The Recovery of Lubricating Oil*, by A. J. Wilson, and *Report of Discussion*. Published by the Diesel Engine Users' Association, 19 Cadogan Gardens, London. S.W. 3; price 3s.

2. Those in which settling and filtration are carried out in a series of chambers.
3. Those in which the oil is passed through boiling water, heated by means of steam coils or electric heaters, and no chemicals are used.
4. Those in which the water is heated but not boiled, and the oil is clarified by chemical means.
5. Those in which the oil is passed through a centrifugal clarifier.

To the foregoing must now be added :—

6. The stream-line filter, invented by Dr. Hele Shaw.

Plants included in Class 1 are the most primitive and simple, and the least effective. A deep cylindrical tank or barrel is used, having a fine gauze strainer at the top through which the dirty oil is poured, and provided with three or more taps at different levels. A wide sludge outlet is also provided, at or near the bottom. The tank or barrel is filled with the dirty oil, which is allowed to stand until it has cleared sufficiently to be drawn off from the different taps in rotation. Two or more tanks or barrels, used in rotation, are needed, as the oil which has settled or is settling must not be disturbed by adding further dirty oil until the whole of the clear oil has been drawn off. Objections to this kind of plant are the length of time required for settling, which may be some months, and the space occupied by the tanks, of which several may be needed. Some oils persistently refuse to become clear, however long they may be left to settle. It must also be noted that the asphaltic and carbonaceous impurities, held in colloidal suspension, are not likely to be removed by any mere settling process.

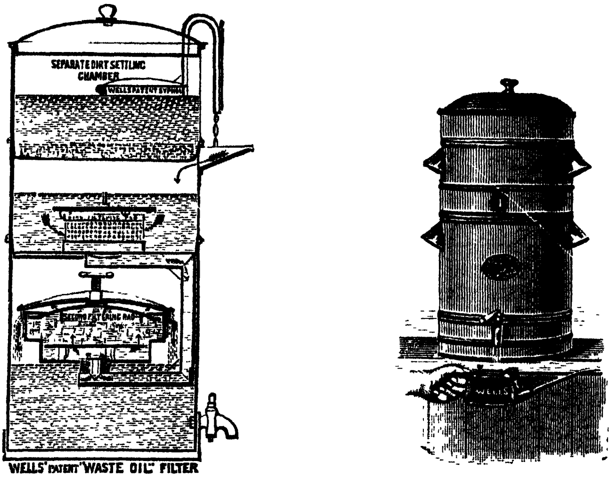

Fig. 256.

Fig. 256 shows in section a waste-oil filter made by Messrs. A. C. Wells & Co., which is an example of the plants included in Class 2. The filter consists of three compartments, either of which can be removed from the others to facilitate cleaning. The uppermost chamber receives the dirty oil, which is allowed to settle for a time dependent upon the dirtiness of the oil. The floating siphon is then set in operation and delivers the settled oil, drop by drop, into the second compartment, whence it passes by gravity through a special filtering pad into the lowest compartment. The descending oil, after percolating through the filtering pad in the second compartment, is led into a tube in the third or lowest compartment, which terminates in a second filtering pad which operates by upward filtration, and the clarified oil finally falls into the bottom of the compartment, whence it is drawn off for re-use, as required. The process of settlement and filtration requires about three days to complete, but can be hastened by heating the oil with a steam coil or electric heater.

A filter of different pattern, belonging to the same class, is shown in section in fig. 257. The dirty oil is poured into the upper part of the chamber *a*, passing through the perforated grid *b* into the lower part, in which water and the coarser and heavier impurities settle. The oil then slowly percolates upwards through the filtering pad *d*, rises over the partition *e*, filters downwards through the chamber *f* into the chamber *g*, from which the clean oil can be drawn off through the cock *c*. The dirty oil in the chamber *a* can be heated by means of the steam coil shown. The filtering pads are composed of white, unbleached cotton yarn. Other well-known filters of the same class are the "Wakefield," "Vacuum," "Valor," "Fox's Filtroil," "Wilcox," etc. Essential features of a good oil-filter of this type are: (1) A capacious settling-chamber, in which the oil can be warmed to increase its fluidity and facilitate the subsidence of water and coarser particles of dirt; (2) double filtering chambers or pads through which the oil passes from the settling-chamber, (*a*) by upward, and (*b*) by downward filtration, the filtering material used being the best white cotton yarn or waste, carefully packed, and capable of being

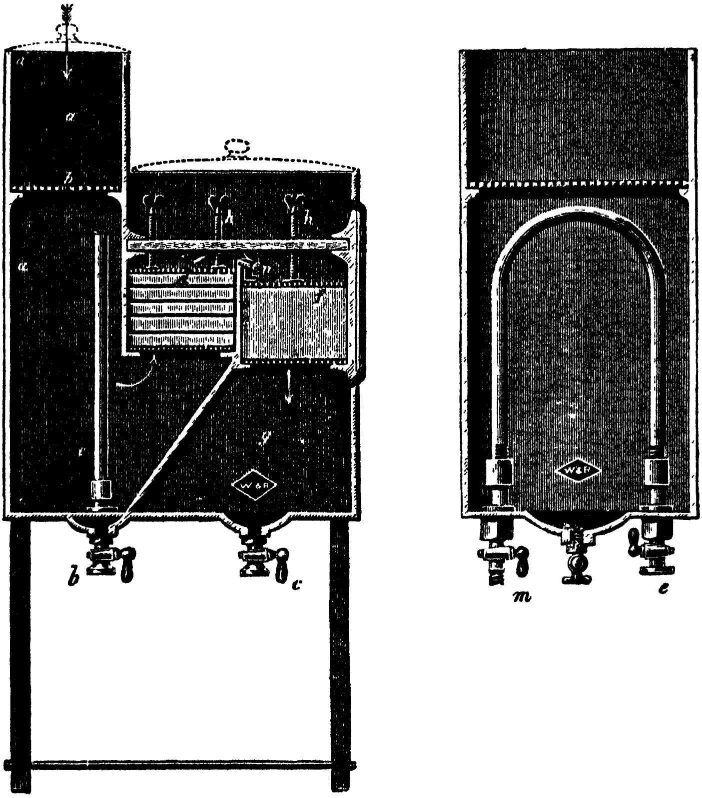

FIG. 257.

compressed by means of a screw; and (*c*) an arrangement for distributing the oil evenly over the surfaces of the filtering pads. Oil filters of this type are used for the smaller power plants, and should be placed in the engine-room in a convenient position for use.

An oil-recovery plant of the type included in Wilson's Class 3 is that installed at the generating station of the Chelsea Electricity Supply Co., a diagram of which is shown in fig. 258. The waste oil from the engines, etc., is collected in a common tank, whence it is pumped into a larger tank placed at a height of about 8 feet above floor level. A pipe from this elevated tank is led to the bottom of a cylindrical open tank, shown in the diagram, of about 50 gallons capacity, which stands on the floor. Water is run into this tank to a depth of about 12 inches, and is heated to boiling by means of a steam coil. The dirty oil is then slowly admitted through the perforated pipe and rises through the boiling water, the rate of flow, regulated by the valve, being such as to maintain a clean yellow froth on the surface of the oil. When about 30 gallons of dirty oil have been thus admitted to the tank, the supply of oil and steam are shut off, and the oil is left to settle for some hours. The clarified oil is then drawn off through the drain cocks placed at different levels and transferred to a tank divided into an upper and a lower compartment. The hot oil is poured into the upper compartment, and is drawn off from the surface, when cool, by a floating pipe, which delivers it into the lower compartment for use. No filtering medium is used. The suspended carbonaceous particles remain partly on the surface of the water in the boiling tank, and those which are drawn off with the oil settle out in the upper compartment of the clarified oil tank.

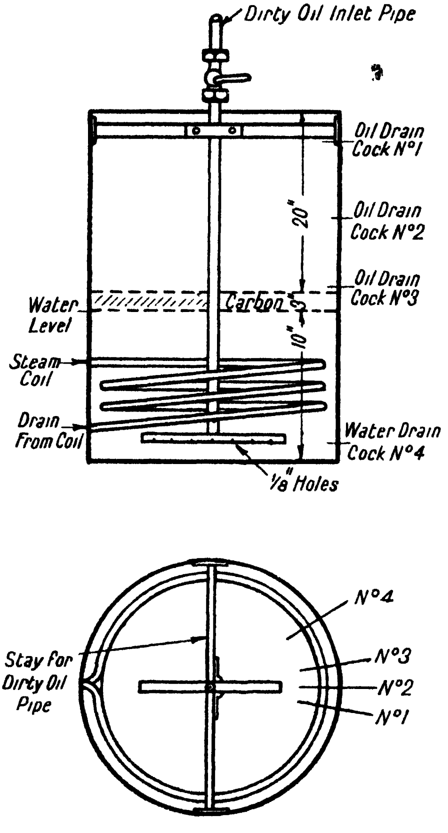

FIG. 258.

Fig. 259 illustrates a plant of the type covered by Wilson's Class 4 and used for the treatment of compounded oils. It consists of a water-jacketed cylindrical tank, lagged with asbestos. The tank has a conical bottom, the cone terminating in a filling pipe which leads down to a semi-rotary pump, by means of which the dirty oil is pumped up from a sump. In this pipe, on the delivery side of the pump, a valve J is fitted, to prevent leakage backwards through the pump when the tank is charged. In cleaning a charge of waste oil, water is first admitted slowly from the town mains through the pipe A and valve K, an electric heater is put into action, causing a circulation of water in the pipes A_1 and A_2 and heating the water, which gradually fills the jacket until the excess overflows through the pipes H and G, and thence to

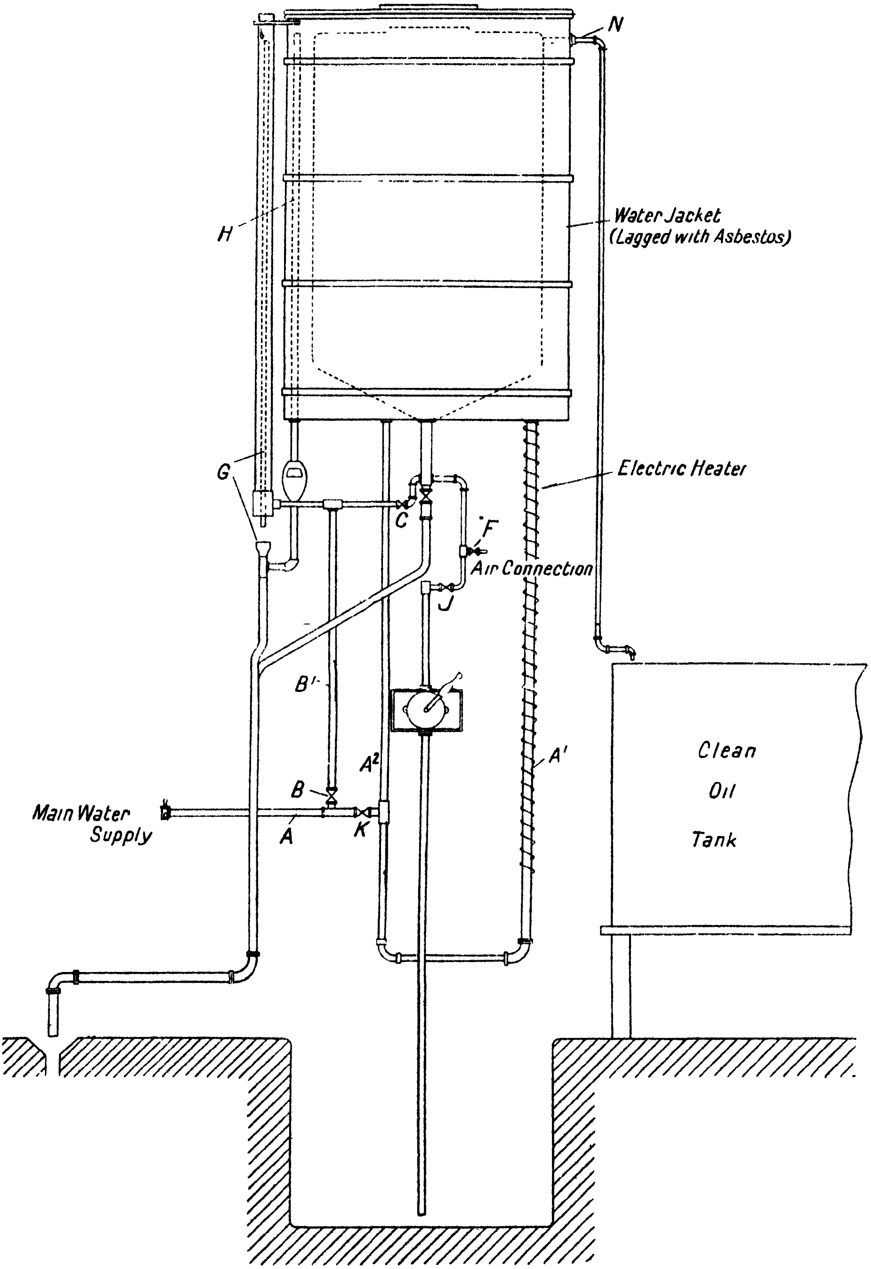

FIG. 259.

waste. The jacket having been filled, and while heating is in progress, valve B is opened and water enters the tank from the bottom, through the valve C. When the tank is half-full, valves B and C are closed. Valve J is then opened and oil is pumped up from the sump by the semi-rotary pump, the oil passing through the water, until the tank is filled to just below the level of the overflow pipe N. Valve J is then shut, and the contents of the tank are heated until they reach the temperature of the water-jacket, which is maintained at 180°–190° F. A charge of soda solution, made by dissolving 10 lbs. of "oilite" (mainly sodium carbonate with a little caustic soda) in a bucketful of hot water, is poured into the hot oil from the top and briskly agitated with the oil by means of compressed air admitted through the valve F. After ten minutes the air is shut off and the contents of the tank are allowed to settle for about six hours. The clarified oil is then displaced from the tank by closing valve K and admitting water into the tank from below, through the valves B and C. The displaced oil flows through the pipe N into the clean oil tank, until the water level has risen high enough to overflow down the waste pipe G, at which point it ceases to rise any higher in the tank, and no water can, therefore, pass over into the clean oil tank. The soda wash used in this process would remove fatty acids from the compounded oil, which might not be an advantage if the whole were removed. An emulsion might also be formed, from which the oil would not readily separate. The process is, in fact, one the success of which would depend very much on how carefully it was worked and the composition of the oil dealt with.

The centrifugal oil-purifiers, included in Wilson's fifth class, are very largely used for marine purposes, and where large quantities of oil have to be dealt with quickly and in a small space. The motion of a ship would prevent the use of any oil-purifier dependent upon quiescent settling, whilst the centrifugal purifiers are not affected by it. The De Laval Oil Purifier is shown in section in figs. 260 and 261. Fig. 260 shows the complete machine, and fig. 261 shows the bowl in which the separation of the oil from its removable impurities takes place. The machine consists, essentially, of a cast-iron frame provided with suitable bearings for supporting a vertical shaft or spindle which carries the separator bowl at the upper end. The weight of the bowl and spindle, together with any thrust due to driving, is taken by two tread wheels on which the lower end of the vertical shaft rests. Surmounting the bowl are two covers which receive the discharges from the bowl. In addition to the discharge covers, another, known as the overflow cover, is provided. If at any time the bowl should become clogged by a large amount of dirt so that the liquid can no longer flow through, the inlet tube fills up and overflows into this cover. This keeps the overflow separate and acts as a warning signal that the bowl needs cleaning. The machine is made in several patterns, arranged for driving by belt, electro-motor, or turbine, so as to maintain a rapid rotation of the bowl.

The oil which it is desired to purify is fed into the regulating cover and strainer shown at the top of fig. 260, and passes down the central tube to the bottom of the bowl, whence it flows out and up through holes in the discs, and is distributed in thin layers between the discs. Here, owing to centrifugal action, separation takes place. The material, which is heavier than water, such as sand and metallic particles, is thrown outwards to the periphery of the bowl and held there in a sediment pocket. The water, being heavier than the oil, also passes outwards and upwards along the outer edge of the discs, and from there to the discharge outlet. The oil, being lighter than the water, passes inwards between the discs, where the thin layers are subjected to such centrifugal force as to throw out the remaining traces of suspended impurities and water. These impurities are forced along the lower surface of each disc towards the sediment pocket, and the purified oil, freed from all suspended impurities except such as are in colloidal suspension, is forced

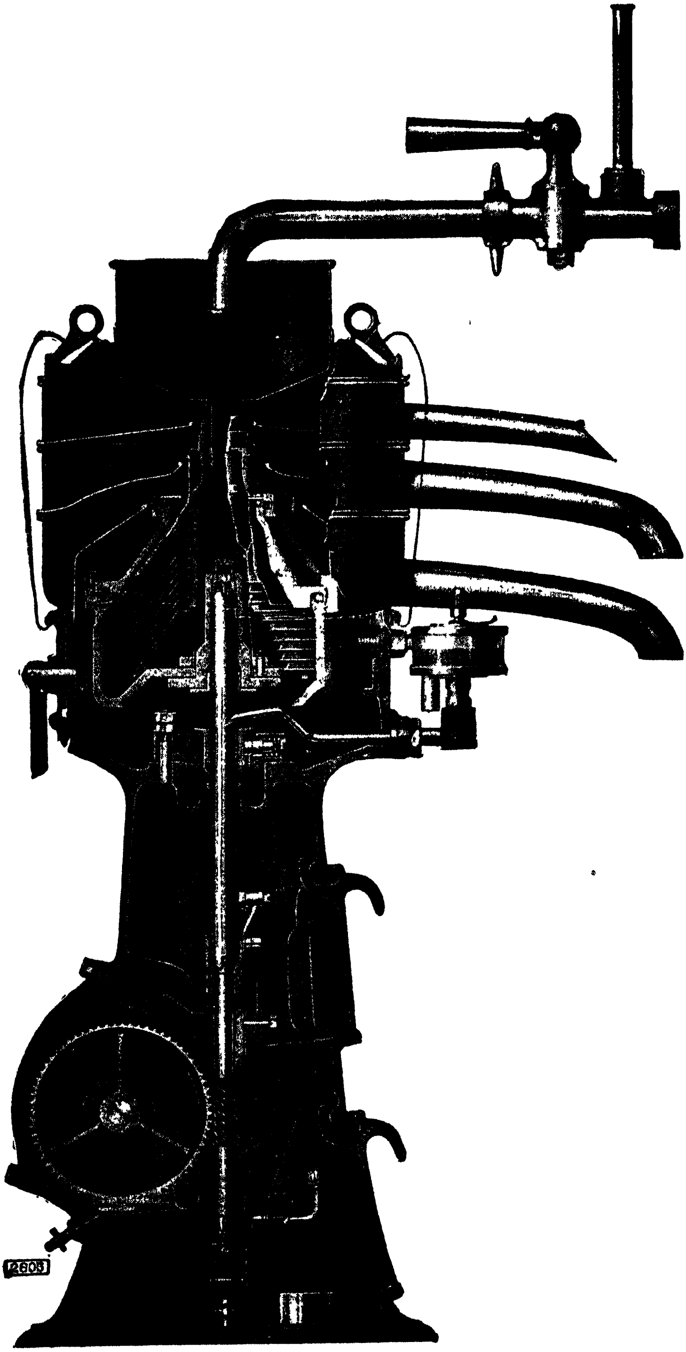

FIG. 260.

toward the central shaft, and from thence upwards to the oil discharge outlet. The makers claim that the action of the De Laval bowl is so perfect that if perchance no water enters the bowl with the oil there will be no discharge through the spout forming the water discharge outlet, whilst if water only is passed through the bowl, nothing will come out of the spout forming the oil outlet. The third spout, shown in fig. 260, as already stated, only comes into operation if the bowl should become choked with dirt

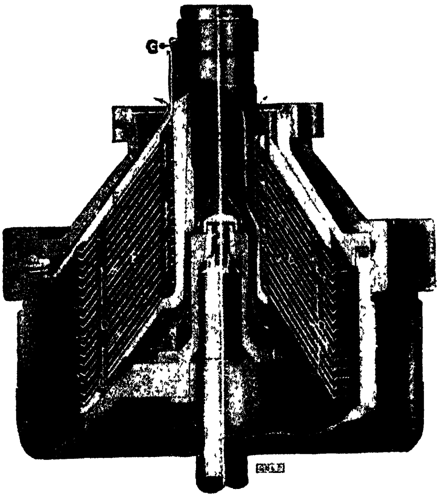

Fig. 261.

In connection with geared turbines, the De Laval oil-purifier is installed between the overhead supply tanks and the drain tank, so that oil can be passed from the overhead tanks through the purifier to the drain tank The purifier can be arranged to purify all or a part only of the oil Crank-case oil, from Diesel and other engines, can be dealt with in either of two ways. The oil can either be used until it has become too dirty for further use, then wholly withdrawn and purified, the engine meanwhile being lubricated with fresh clean oil: or the oil, or a portion thereof, can be pumped through the purifier at regular short intervals, and thus maintained in a moderately clean and dry condition. Cutting oils can also be reclaimed by means of this machine.

A centrifugal oil-purifier of more recent design, known as the Sharples Super-Centrifuge, is shown in figs. 262 and 263.[1] In this apparatus, the separator bowl consists of a plain steel cylinder, without discs or plates, which can be caused to rotate at a very high speed. Fig. 262 shows this centrifuge in section. The bowl A is a steel cylinder, 4½ inches in diameter, 30 inches in length, and weighing only 35 lbs. It is housed within a conical cast-iron casing, and is driven by an electric motor or small steam turbine at 17,000 revolutions per minute. The bowl is suspended from a ball bearing by means of a flexible spindle, and at the foot is guided in a bushing designed simply to limit any lateral movement. Inside the bowl, attached to its upper end, is a three-winged vane B, the purpose of which is to prevent the liquid from slipping relatively to the bowl and so losing some of the centrifugal effect. The oil to be purified is conveyed by the pipe C to a jet at the centre of the guide bush at the foot of the bowl, and on issuing from the jet, strikes a horizontal baffle plate which spreads it out sideways, as shown diametrically in fig. 263. Under the influence of the centrifugal force the rising liquid piles up round the cylindrical surface of the bowl, leaving an air-space in the interior, and the liquid becomes stratified, the solid impurities heavier than water being thrown to the outside and eventually settling at the foot of the bowl, and the oil, with any contained water, rising. A ring at the top of the bowl--the ring from which the three-winged vane is suspended--permits the two liquid strata to be separated, the lighter oil going through the centre of the ring and the heavier water round its periphery. The two streams find their exit through separate passages in the head and flow into collecting chambers

---

[1] From blocks kindly supplied by Super-Centrifugal Engineers, Ltd., Aldwych House, London, W.C. 2.

provided with spouts, which discharge the oil into the clean tank and the water to waste. A hand-brake, operated by a spring controlled by a hand-lever, is provided for bringing the bowl to rest after a run. When this has been done, oil, etc., remaining in the bowl, automatically drains out through an outlet in the bottom of the main casing into a small drain tank. The bowl is then removed, cleaned from the solid impurities and reassembled, an operation which is stated to take no more than ten minutes.

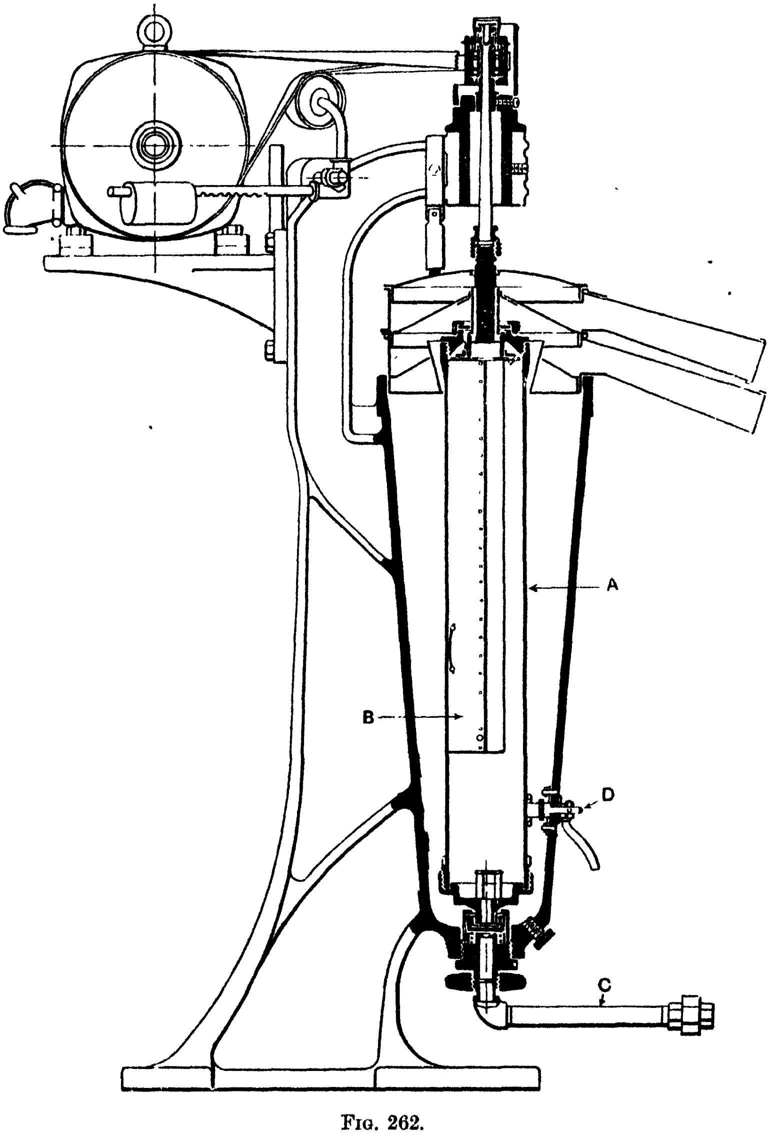

FIG. 262.

What promises to be a great advance on all the above-described methods of oil reclamation is the stream-line filtration method invented by Dr. H. S.

Hele Shaw.[1] The discovery which led to this invention was made in the course of work on the mechanism of stream-line flow on which Dr. Hele Shaw had been engaged for many years. In making experiments with alternate streams of colourless glycerin and glycerin coloured red with a dye, between a pair of glass plates, it was discovered that when certain very small distances separated the plates, and the glycerins were forced against their edges, whilst the glycerin flowed between the plates and followed the usual stream-line path, the red colouring matter was arrested at the edges of the plates.

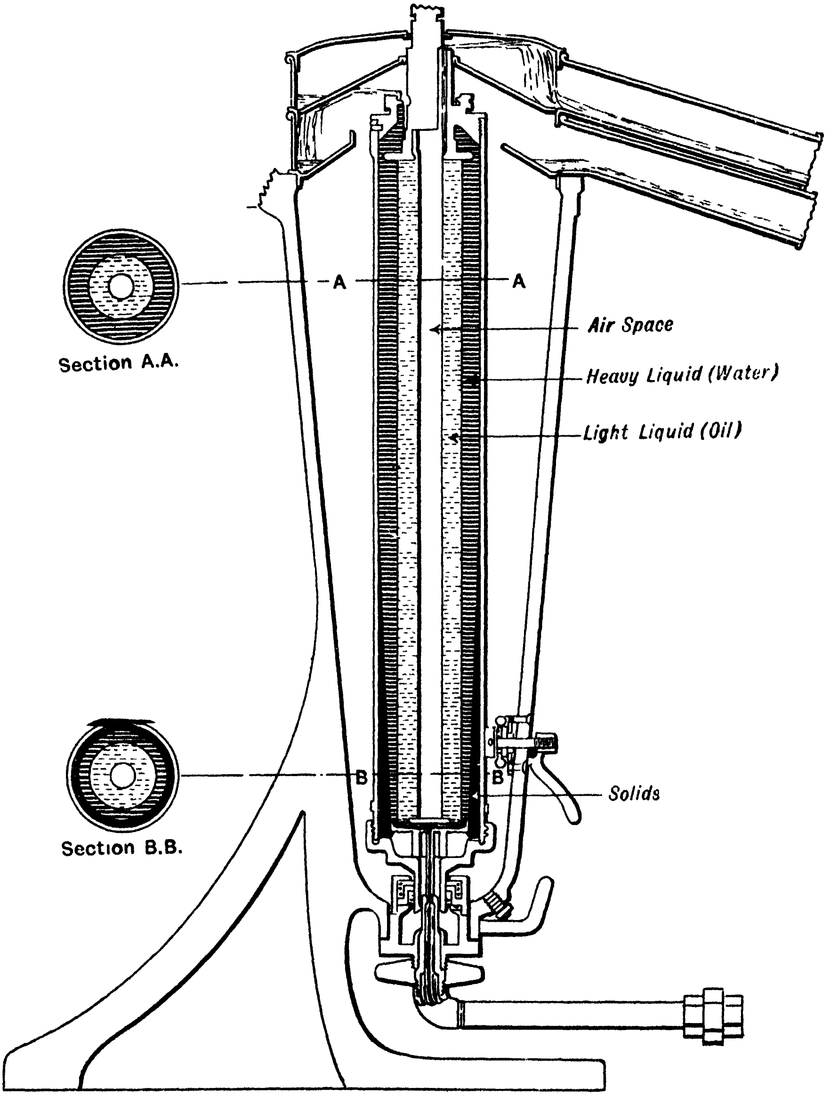

Fig. 263.

---

[1] *Proc. Roy. Soc.*, 1923, ciii. (A), pp. 556–561; *Jour. Soc. Chem. Ind.*, xlii. (1923), pp. 353–356.

The work was followed up with sheets of paper instead of glass, and it was found that when chemically treated paper was used, which was impervious to the liquid experimented with, and a very large number of sheets were pressed together in a pack, it was possible to effect filtration and separation of such materials as colloidal suspensions, which cannot be separated by any ordinary method of filtration. Among such suspensions, it was found that the colloidal, asphaltic, and carbonaceous impurities in used lubricating oil, which had hitherto defied all attempts at separation, except by chemical coagulation, could be filtered out and a perfectly clean oil obtained without any further treatment.

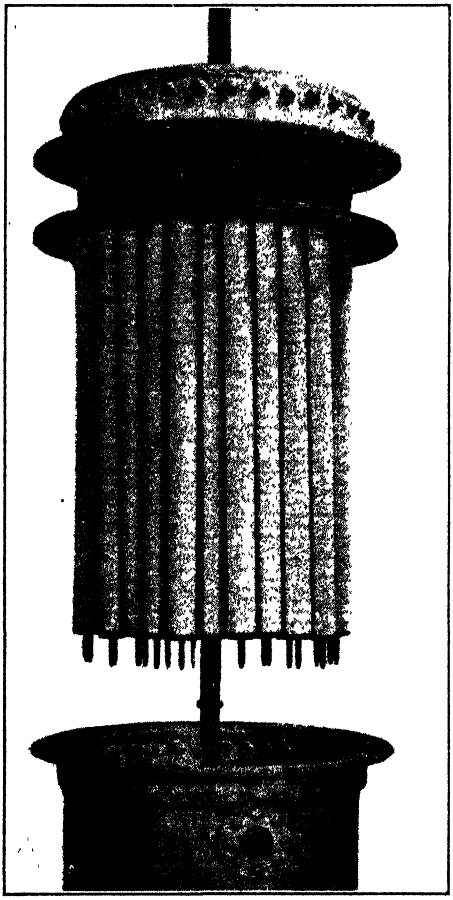

Fig. 264.

The action of this filter would appear to be due to the formation of an adsorbed film on the filtering discs, which orients a thicker film on the outside, and from this thicker film many materials are rejected. When the distance between two filtering discs is sufficiently small, any liquid passing must be free from many impurities which are left on the edges of the discs. Hele Shaw [1] remarks. "When the film was reduced in thickness beyond a certain amount, say to 1/10,000 inch or less, not only was the matter in suspension, prevented from entering, but the colour bands in the stream-lines became invisible, and the liquid passed through the spaces between the discs freed from the introduced impurities."

To achieve the results stated, the impervious paper must have a suitable matted or rough surface; if a smooth surface is obtained by calendering, then it is necessary to print or emboss the paper in such a way as to form channels of any minute depth required through which the flow can take place. It was found that the grain or matt of the sheets of certain waterproof paper prevented the sheets from touching over their entire surface when pressed together, and provided the channels necessary to allow the required flow.

By this method of filtration, the colouring matter of what were supposed to be complete solutions is at once removed—the filtrate from liquids coloured with aniline and other dyes being clear and colourless.

Subsequent experimental work has led to the perfecting of the filter, examples of which are shown in figs. 264, 265, and 266.[2] It must be understood

---

[1] *Proc. Roy. Soc.*, 1923, ciii. (A), pp. 556–561.

[2] We are indebted for these figures and particulars to the Stream Line Filter Co., Ltd., 64 Victoria Street, Westminster, S.W. 1.

that in the stream-line filter the liquid is drawn by suction or forced under pressure between (not through) leaves of prepared paper, pressed together more or less tightly, according to circumstances, and the solids present are arrested at the *edges of the paper leaves*, whilst the filtrate passes on to the outlet through the extremely thin, flat passages between the separate leaves. As applied to the filtration of dirty lubricating oil, the paper leaves are used in the form of flat rings, about 1⅝ inch in diameter, with ⅝-inch diameter round holes through their centres, and some thousands of these rings are threaded on mild steel bars of square cross-section, so that when the rings are compressed they form tubes of about 2 feet in length. A number of these paper tubes with their central supporting steel bars, each of which forms a filtering element, are mounted on a circular steel plate and enclosed in a cylindrical container of sheet metal, as shown in fig. 264, which illustrates the container with the filtering elements withdrawn. In this form of filter, the necessary

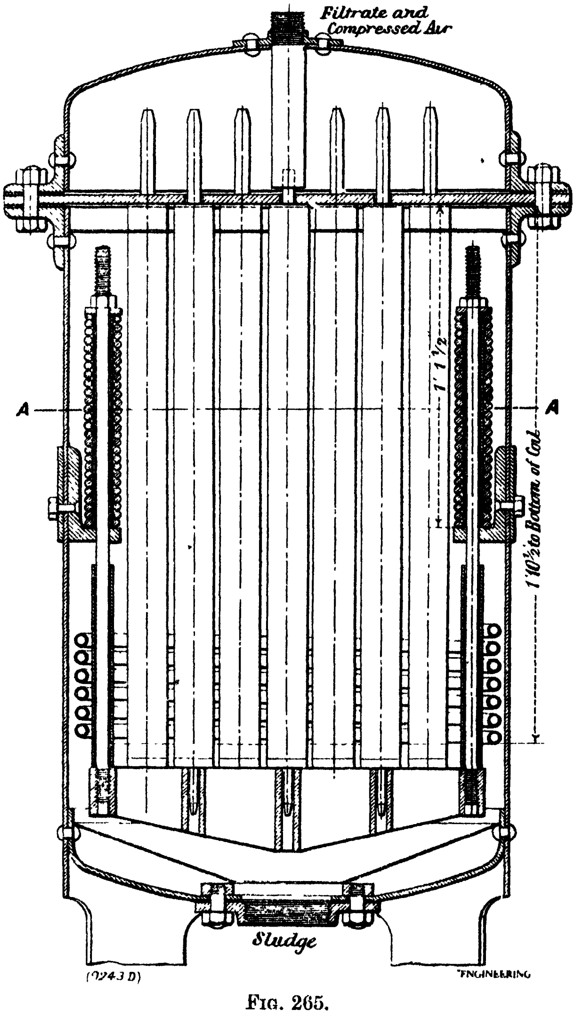

(9243 D) ENGINEERING

Fig. 265.

pressure between the paper rings is supplied by helical springs mounted on the upper ends of the bars, which pass freely through holes in the plate from which the bars are suspended, the springs being held in position by washers, so that they tend to pull the bars upwards and compress the paper rings between the plate and a washer on the lower end of each bar. In the arrangement illustrated in figs. 265 and 266 the pressure is applied to the paper rings by a cast-iron grid into which the lower ends of the square bars carrying the paper rings fit, the whole grid being pulled upwards to compress the paper by rods fitted with springs compressed between lugs on the walls of the container, and nuts and washers on the rods, as shown in the figures. The upper circular plate divides the container into two parts, as shown in fig. 265. The dirty oil is fed into the lower part. Steam coils are provided, as shown, to heat the oil to about 200° F., in order to reduce the viscosity and assist in the evaporation of water. The upper part of the container is connected with the cylinders shown in fig. 267, used alternately, from which the air is exhausted by means of a pump capable of maintaining a vacuum of about 26 inches of mercury. This vacuum is sufficient to draw the oil from the lower part of the filter, between the paper rings, up through the spaces between the square steel bars and the round holes in the paper rings, into the upper part of the filter, and thence into the evacuated cylinder, from which, when full, it is drawn off for use as required, the second cylinder meanwhile being evacuated and drawing the oil from the filter. The solid impurities are arrested at the outer surfaces of the filtering elements, and when the accumulated deposit has become so thick as to impede filtration it is removed by means of a current of air under a pressure of about 20 lbs. per sq. inch, admitted to the upper compartment of the filter from a separate outside source, or from what is normally the outlet side of the vacuum pump. This air passes between the paper rings in a reverse direction to the filtering oil and quickly detaches the deposit (see fig. 268), which falls to the bottom of the filter and is removed through a sludge valve. When the filter is being cleaned, filtration is of course suspended, the cocks controlling the vacuum and the compressed air being interlocked, so that both cannot be opened at the same time. Under the combined influence of the vacuum used in filtration and the heating of the oil by the steam coil, water in the oil is evaporated, as well as the lighter fractions of cracked fuel oil which may have found their way into the lubricating oil.

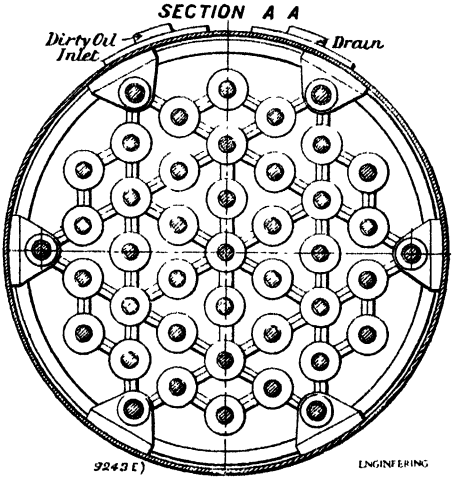

Fig. 266.

The filter has been adopted for use in connection with steam turbines, Diesel and other internal combustion engines, and oil engines, the oil undergoing filtration being heated either by steam or by means of exhaust gases from the engine. A small filter having 16 filtering elements, each only ½ inch in diameter, and capable of filtering at the rate of two gallons per hour, has been designed for use on motor cars. The results in Table CLXIII., published by the Stream

Line Filter Co., were obtained with oil used in a 140-h.p. cold-starting Diesel engine. In a discussion which took place before the Chemical Engineering Group of the Society of Chemical Industry in March 1926, Dr. W. R. Ormandy stated that he had examined chemically the products separated by the stream-line filter from a crank-case lubricating oil. They varied greatly in composition, depending apparently on the route covered by the vehicle. In some cases much silica was present, from road dust, in other cases there was very little silica, but in all cases much asphaltic matter was present, showing that the asphaltic bodies formed by oxidation of the mineral oil were removed by

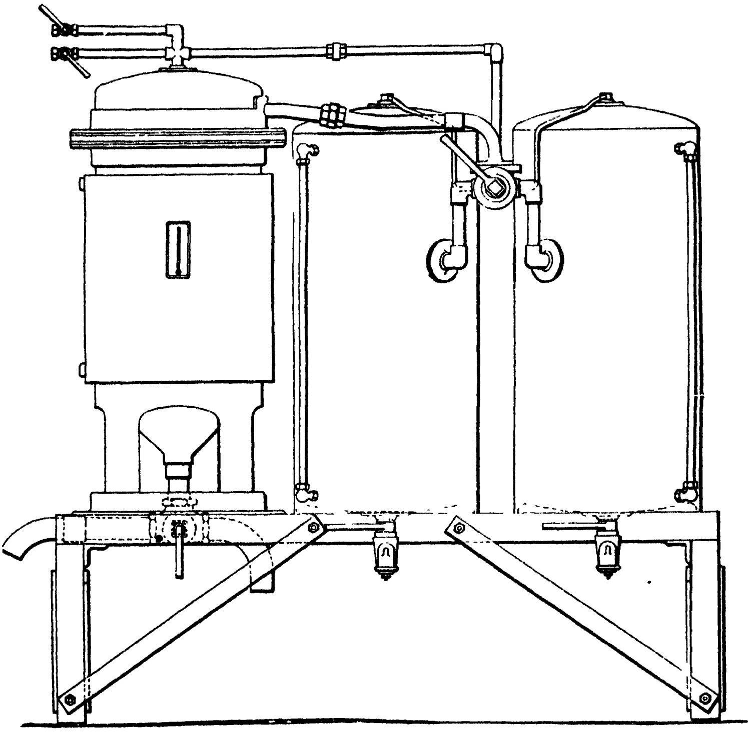

Fig. 267.

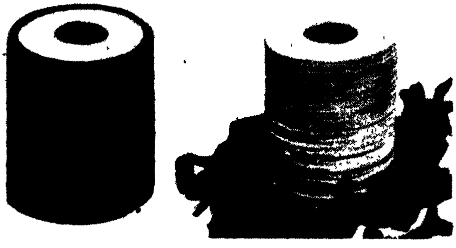

a. *b.*

(*a*) Filter Pack with Accumulated Residue. (*b*) Filter Pack after Evacuation.

Fig. 268.

TABLE CLXIII.

	Oil before Use.	Oil after Use.	Used Oil after Filtration.
Specific gravity at 60° F., . .	0·8855	0·8952	0·8891
Colour, ...	Pale red	Black	Deep red
Flash-point (closed), . .	390° F.	370° F.	394° F.
Efflux time (Redwood) seconds—			
60° F., ...	930	1207	1089
70° F., ...	643	823	740
100° F.	102	126	112·5

the filter, and the filtered oil in essential particulars was practically as good as the original oil. The filter further acted mechanically as a means of separating the water from the oil. He believed that valuable information would be obtained in regard to the nature of the wear and tear which went on in motor-car engines by a systematic examination of the products which could be separated from the crank-case oil by the stream-line filter, and some of which, so far as he knew, could not be separated in any other way.

CHAPTER XVI.

THE MANAGEMENT OF MACHINERY.

Cleanliness. - One of the first points to be attended to, if machinery is to be kept in good order and work satisfactorily, is cleanliness. We have already pointed out the necessity of keeping grit and dirt of various kinds out of the lubricants used. But rapid wear and even overheating may result from dust blown about the engine or machine-room. On this account, proper care should be taken to prevent the accumulation of dust in corners, louvres, etc., for in windy weather it is liable to be suddenly scattered over the machinery. Indeed, every precaution should be taken to prevent the admission of grit and dirt, the floors being moistened and swept repeatedly, and every corner scraped clean. In many cases it is well to cover motors, dynamos, etc., when not at work, by dust-proof coverings.

The extent to which proper care is taken to keep the machinery in order, and in proper running condition, is nearly always reflected by the general appearance of the installation. Carelessness of management go hand in hand with dirty machinery and untidy engine-houses and shops. In many of our modern engine-rooms, dust, dirt, and scattered oil or waste are considered as much out of place as they would be in a dwelling-house.

The nature of the task imposed upon the engineer in charge of an engine-room or mill depends largely upon the design of the machinery he has to look after. As extreme cases we may contrast the huge, slow-moving pumping engine of the last century with the comparatively light, high-speed motors furnishing power for a modern electric-light and power station. In the one case lubrication is generally effected by the old imperfect siphon arrangements, and in the other by the more modern automatic methods giving perfect or pressure lubrication. On the score of satisfactory running there is little to choose between the two methods, but the older machines cannot compare as regards first cost and economy with the more modern designs. It frequently happens, however, that steam, gas, and oil motors are made to run at speeds for which their lubricating arrangements are quite unfitted, and it is only by the exercise of the greatest care that casualties can be avoided. Free lubrication and good oils being necessary, splashers have to be fixed in such a way as to prevent the oil from being thrown about, and tins placed to catch that portion of the lubricant which is ejected at the ends of the brasses.

High speeds may be considered as ranging from 500 to 15,000 revolutions per minute, the higher speeds being generally confined to comparatively small spindles transmitting considerable power, and the lower speeds to shafts several inches in diameter. To run successfully, the lubrication must always be good, for the least failure in the oil supply causes the bearings to run hot. To ensure successful running, the oil-bath or pressure-supply principle should be adopted, the lubricant being thrown or forced continuously *over* the portion of the bearing on the opposite side to that of the brass which carries the load. This may be effected either by the action of a disc, chain, or hoop on the shaft, or by a small pump raising the oil from a reservoir below the bearing.

In some high-speed bearings for shafting, which have only an imperfect automatic supply, additional cups filled with grease are placed at the ends of the bearings. Should they run warm, this grease melts, runs out, lubricates the rubbing surfaces, and prevents for the moment any serious injury. The covers of such grease cups often rest upon the grease and fall when it runs away, thus warning the man in charge of the need of replenishing.

At the present time the whole tendency of modern engineering is to run every machine at its greatest possible speed, and thus get a maximum amount of work out of a motor or other machine of minimum size and weight. To enable this to be accomplished satisfactorily the most efficient designs of lubrication apparatus must be installed, and the old loose methods of engine- and machine-room management must be replaced by others which insure the regular inspection of lubricating appliances, and the supply of fresh oil when the lubricant is used over and over again.

The attendant in charge of high-speed machinery must exercise all possible care and attention, for, as we have pointed out, machines are frequently made to run at speeds for which the methods of lubrication adopted do not properly fit them.

It is perhaps in our large electric-light and power plants, and the engine-rooms of ocean liners and battleships, that the organisation of the operating staff reaches its greatest perfection. In such installations, any failure of the machinery would lead to such serious losses and disorganisation of manufacturing processes depending upon them for power, or prevent the proper time-keeping of shipping lines, that every care has to be taken to instal the best possible lubricating apparatus and see that regular and sufficient attention is given to all bearing and rubbing surfaces Occasionally a failure will occur owing to the existence of a hidden flaw ; but in the majority of cases casualties arise from defects in the working of lubricating devices. Indeed it can truly be said that the punctuality, reliability, and safety of ocean liners, battleships, and power stations at the present time results more from the improvements which have been made in lubricating devices and their proper management than upon anything else.

Evil Effects of Grit, etc. Before rejecting any particular lubricant because difficulty has been experienced owing to the heating of the bearings supplied with it, care must always be taken to ascertain whether the fault really lies with the lubricant, or with impurities accidentally introduced Enginemen are apt to think that a certain number of hot bearings are sure to occur, however careful they may be. No doubt, even when the greatest care is taken, bearings will occasionally run hot. But in all such cases the heating must arise from some irregularity, and the extent to which trouble is experienced is, in the majority of instances, a measure of the capacity of those in charge of the machinery to keep things in good order. Thus, as an instance, although the quality of the oil used may be excellent, and very suitable for the purpose for which it is being used, still the engineman may be troubled with hot bearings, often, indeed, when extra care has been taken to keep the machinery in good order by giving it an ample supply of oil. This almost always arises from the presence in the lubricant of mechanical impurities, such as sand, sawdust, glass, vegetable fibre, mucilage, or precipitated paraffin. In transparent oils these are easily seen, but in the thicker, dark varieties they are almost entirely invisible. When oil containing such impurities, which it very commonly does, is poured into oil-cups in the usual way, the solids are filtered out by the trimmings, or settle to the bottom of the reservoir, and do not get into the bearings. But enginemen frequently go round their engines and pour a little oil into the ends of the bearings, or even remove the trimmings or oil-pads, and pour oil directly upon the bearing surfaces, and thus introduce grit at points where it can easily get between the rubbing surfaces. Films of various kinds also settle on the trimmings, or obstruct the oil passages, and prevent the oil from finding its way with the necessary freedom to the working surfaces.

Importance of straining all Oil. In most engine-houses the different oils required are stored in iron tanks, from which they can be drawn as required. Into these tanks the lubricants are pumped from the barrels supplied by the oil merchants. To enable as much of the oil to be removed as is possible, the pump-pipe is passed through the bung-hole and reaches to within a very small distance of the barrel bottom. The oil, as it is drawn out, thus carries with it the greater part of any solid material which may lie there. To prevent such foreign matter from passing into the oil-tank, a receptacle made of fine wire gauze should be fitted into the manhole of the tank in such a manner that it can without difficulty be taken out and cleaned.

To reduce still further the risk of small particles of grit entering the oil-can, the lubricant as it is given out for use should be carefully strained through wire or cotton gauze as it is drawn from the tanks; for, however good it may be, the fine solid particles it sometimes contains, if, as we have seen, they should chance to be introduced between the rubbing surfaces, will give rise to excessive friction, cause overheating, and make the engineer feel uncertain whether he is using a suitable lubricant or whether his supply is really up to sample.

When the loss which may result from the stoppage of the engines driving a large mill or ship, or generating current in an electric installation, is taken into consideration, this double precaution, adopted to prevent the introduction of solid matter, does not seem uncalled for.

Grit may also be found in solid lubricants, such as natural graphite. As such solids mixed with fats are sometimes used to put upon bearings which have suffered abrasion and become overheated, its presence may quite defeat the purpose for which the solid was applied.

Glue in Wooden Barrels.—It is customary to coat the insides of wooden barrels in which lubricating oils are sometimes supplied, with glue to prevent leakage, and it occasionally but rarely happens that the hot liquid glue which is used in coating the barrels, and should be thoroughly drained out, is left in the barrel, and may cause considerable trouble in oil tanks and lubricators if its presence is not detected before the oil is withdrawn from the barrel. This liquid glue does not mix with the oil, and will be found at the bottom of the barrel after it has been standing a sufficient time for the glue to settle out. Such impurity might be detected when the oil is being strained before use; but a syringe with a long narrow spout, inserted through the bung-hole to the bottom of the barrel, filled, and then withdrawn and the contents discharged into a clean glass, would be the best means of detection.

Starting of New Machinery.—To ensure the proper working of any such complicated piece of mechanism as a steam engine, especially if it be run at a high speed and with a heavy load on the bearings, or if the work transmitted or developed be large, much depends upon the intelligence of the erecting fitter or of the engineman who sets the machine in motion. Of course the bearings may be so designed that, owing either to the strains set up by the stresses acting on them, or to the expansion of the parts from the heating of the cylinders, etc., the rubbing surfaces are pressed together with undue force in places, and cannot possibly run cool without some small alteration being made or additional clearance given. Upon the engineer in charge, therefore, falls the duty of making good such defects in the bearings, or their method of lubrication, giving freedom to certain parts, such as slide bars, to expand so that they may not buckle with changes of temperature, putting in lubricating grooves, etc., where they have been omitted, arranging for the proper escape of condensed water from the cylinders, and taking care that all the surfaces have been properly bedded together. All omissions detected or alterations made should, of course, be carried out with the cognisance of those responsible.

Even when all precautions have been taken, an engine will seldom run cool if it be at once worked with the full load on or at its maximum speed. This arises from the fact that for good lubrication, and to obtain a low coefficient of friction, the working parts must bed themselves together in a way which a fitter is quite unable to imitate. Indeed, in a short time all bearings. if properly designed, are worn to a shape which enables the lubricant to be drawn in between the surfaces and wedge them apart. When this shape has once been attained, further wear at running speeds almost ceases, especially if suitable methods of lubrication and proper lubricants be used. The machine should consequently in the first instance be run with a light load at a very low speed. Under these conditions the wear is comparatively rapid, especially if a moderately thin mineral oil be used and the journals and pins be allowed to bed themselves in the brasses. The speed should then be increased, and the most suitable oil used when, after some hours' running, the working speed has been attained. During this stage it is well to supply the lubricant liberally, to prevent overheating.

In the case of railway vehicles, even when the greatest care is taken, a journal may run hot; it then becomes necessary to change the brass. A hard white metal or bronze bearing cannot be expected to run well at first, even if very carefully fitted, for, as stated above, the correct form of the surface can only be brought about by wear, and whilst such wear is going on at high speed the heat developed may be very great. To enable a vehicle, a bearing of which has become so hot as to damage the rubbing surfaces, to be run at once, a new brass may be put in with a lead surface about $\frac{1}{16}$ inch thick. This rapidly beds itself upon the journal in such a way as to form a good surface where the journal is smooth, and does not bind heavily where the journal is damaged. A lead surface of this kind, H. R. Haigh states, will run several hundred thousand miles without being worn off.

Methodical Habits of Lubrication.—The most prolific source of trouble experienced with machinery arises from the occasional failure of the attendant to give each bearing its proper supply of oil. No doubt an unsuitable oil, the presence of grit or some such cause, may easily result in overheated bearings, but as a rule there must be a practically complete failure of the supply to give rise to a casualty. That this may happen very easily will be recognised when the number of bearings to be oiled in some machines is remembered; for a single oil-hole or cup missed during a round of oiling will often lead to grave results. Each bearing and rubbing face of a locomotive, for instance, must be lubricated before starting, each bearing receiving a sufficient supply to last for about 150 miles. In this case forgetfulness, or the non-adoption of a good system of oiling by the driver, may allow a bearing to become overheated and delay an express train for hours.

To minimise the trouble arising from such causes, the engine attendant should systematically examine and occasionally feel the metal of all bearings, so as to detect any case of overheating in its early stages, and, when oiling a machine, should proceed in the same manner on every occasion, always taking the bearings in the same order, so as to reduce the risk of missing any. Even in the case of a sewing-machine or cycle this should be carried out. With such machines a descriptive pamphlet is usually supplied, showing each oil-hole numbered. By following the instructions and giving each hole, etc., oil in the order stated, it will be almost impossible for any important bearing to seize. In the case of a locomotive, the driver should commence at the leading end, say on the right-hand side, and then systematically oil each bearing as he moves towards the end of the tender and back along the left side of the engine to the front again. By adopting some such methodical plan, the risk of missing any bearing and thereby causing a failure is reduced to the smallest possible proportion. The same plan should be followed in putting the trimmings into the oil-holes of siphon lubricators before starting from a station.

Examination of Bearings. -Assuming that all the bearings and lubricated surfaces are in good condition after a motor, machine tool, or mechanism for the transmission of power has been set to work, it by no means follows that they will continue to remain so for more than a few months without being properly cleaned and small defects made good. Careful periodical examinations must therefore be made of each bearing, for it frequently happens that valves wear out with unexpected rapidity, oilways become choked with metal or dirt, brasses fracture along the crown, white metal partially runs out of the recesses prepared for it, lubricating pads become glazed, and a hundred other defects reveal themselves. In the case of a locomotive, or a motor driving an electric-light and power station, any such failure will, if not discovered and remedied in time, lead to a breakdown, and either delay a train or temporarily extinguish the lights.

Although it is advisable to examine bearings at stated intervals, yet, unless they have been getting warm or knocking, or there is some defect or flaw which requires attention, the parts taken to pieces should be replaced exactly as they were when removed It is a great mistake always to refit or rebed the brasses, for it is impossible to give the surfaces the form which gives the least frictional resistance. Wear alone can do this. Examinations should, therefore, be confined to seeing that all the parts are sound, "tinkering" with the rubbing surfaces being avoided as much as possible. Indeed, a well-designed and properly cared-for engine should run for years without the use of either a file or a chisel, provided it be kept clean and the lubricating appliances be always in good working order.

In dusty or dirty situations, where the oil has a tendency to thicken, or in cases where the wear of the bearing or shaft is considerable, deposits are apt to form in the oilways and prevent the proper flow of the lubricant. To prevent such deposits from collecting to a serious extent, pedestal caps, etc., should be occasionally removed and cleaned.

When pad-lubrication is resorted to, it is necessary to remove the pads every few weeks and clean the surface which comes in contact with the moving surface, for the wool often becomes glazed by the metallic surface against which it rubs. The pad must, therefore, be scraped clean and well oiled each time it is removed, *i.e.* about once a week. Unless this be done regularly and often, the bearing will not keep cool and wear well.

Trimmings also require frequent examination and renewal. In warm places fatty oils, and even mineral oils, gum and clog the pores, as does dirt in dusty places. Want of proper attention to trimmings is a fruitful source of heated bearings, for the volume of oil supplied by them varies with the number of strands or with the fit of the woollen plug in the oil-hole. Any change either in the fluidity of the oil or in the cleanliness of the pores also alters the rate of supply to the bearing.

Where the lubricant is supplied by oil-cups fitted with small valves at the bottom in such a way that the rate of feed may be judged by the rate at which the oil falls from a small nozzle, the passages are apt to become suddenly clogged by mucilage or dirt stirred up from the bottom of the reservoir. They should, therefore, be regularly examined and cleaned out. The oil should also be removed periodically from all reservoir bearings, filtered, and if not too acid, used over again.

Examination Book. To ensure the examinations being really made at the required intervals by those whose duty it is to attend to such matters, an examination book should be kept in which is clearly stated the nature of all periodical examinations, a column being provided for the engineman or fitter to sign after having made each inspection.

The necessity for adopting this course is the greater the larger the station or mill and the more numerous the machines of various kinds it contains. Such machines, motors, or lines of shafting must be consecutively numbered, so that they may be easily identified and the entries referring to repairs or examinations properly kept up.

If such a book be not kept, the engineer in charge cannot expect each motor, etc., to be properly and regularly attended to, for some portions of the machinery will receive undue attention, whilst others will be neglected, and all sorts of difficulties will arise which a better organised system would prevent.

Preservation of Machinery not in Regular Use.—It frequently happens that an engine plant for the supply of power is put down in duplicate, and parts may have to stand idle for weeks or even months. Whenever possible, such engines, etc., should be worked alternately, so that all the surfaces may be kept clean, smooth, and in good condition. When such motors as marine engines have to stand idle in dock, it is well to get up steam occasionally and run the engine for a few hours. Should this be impossible, the engine must be "pinched" round once each day to keep the cylinder faces in good order. Discs fitted with teeth are often keyed on to the shaft for this purpose.

Protection of Polished Surfaces.—In cases where an engine or machine has to lie idle for any length of time, a better plan is to *take the parts to pieces*, clean *all* the rubbing surfaces, and cover them with a protective paint. The same treatment should be accorded to accurately machined faces which are to be used for rubbing, and, indeed, all light work which is to be kept ready for use, as soon as it is finished: Unless this plan be adopted, the bearing surfaces will soon become pitted and rusted to such an extent that the machine will cost more to repair than it is worth.

The most commonly used mixture for this purpose is one consisting of white lead and tallow. It forms a good cover when put on warm, and it does not corrode the metals, as the acid constituents of the tallow, if there be any, are converted into lead soaps. The white-lead in this mixture plays the part of the lime or soda in the numerous axle or other greases. Neutral petroleum jelly is also very effective in preserving bright steel from rust, if the surfaces to which it is applied are perfectly dry.

When the machinery is for export purposes, and may be exposed to rain or moist air, the surfaces must be covered with black enamel or japan, which effectually protects them from rust, even if they should be immersed in water for many hours.

Overheating of Bearings.—We have already mentioned a number of causes which may lead to overheating, which should have been provided against either whilst the machine was being erected or during the preliminary or trial runs. It sometimes happens, however, that a bearing may run short of oil for a few minutes, or that grit may get between the surfaces and cause trouble. When this occurs to a marine-engine bearing, and the damage likely to be done to the engine is less serious than that which would result from the stoppage of the vessel, it is the custom to turn a stream of water, if possible soapy water, upon the heated parts and keep going. In many cases plumbago thrown over the heated surface, or run on to it mixed with oil, will prevent serious injury. Much the same may be said of a locomotive bearing as regards the advisability of stopping, but here nothing must be done which will endanger the safety of the train. Electric-light engines, where they are in duplicate, and most other motors, machine tools, etc., can be stopped for examination at once. Unless this be done promptly, the injury sustained may necessitate a new step or journal

In all cases of sudden heating it is wise at once to use a good fatty oil, as this kind of oil does not, to the same extent as mineral oil, lose viscosity with rise of temperature, and the fatty oils are more "oily." A can of rape or castor oil may be kept handy for such emergencies.

To allow a bearing to run without attention which becomes slightly heated day after day is a great mistake, as there must be something radically wrong to cause such heating. The shaft or journal may be oval, one or other of the surfaces damaged, grooved, or flawed, the oilways blocked up the footstep distorted by overheating, the lubricator working improperly, the shaft sprung out of line, etc. It might not appear at first sight that a mere crack in the crown of a brass, especially as it scarcely affects the area of contact, would cause trouble. But it must be remembered that such a crack allows the oil to escape, and largely reduces the carrying power of the oil-film.

C. W. Naylor[1] mentions a case where two 5-inch diameter shafts, carried in plain babbited cast-iron bearing boxes split on a horizontal plane, each shaft transmitting power by belting from a steam engine to five electric generators, persistently ran hot when lubricated with oil or grease. As the pull of all the six belts on each shaft was horizontal, the oil was probably forced out through the split in the boxes. However, it was eventually found possible to lubricate these bearings with water, a small stream being allowed to trickle through the bearings whilst running, and oil being fed into the bearings only during five minutes before closing down, in order to prevent rusting. The wear on the babbit and boxes during eleven years, whilst lubricated with water in this manner was found to be only $\frac{1}{4}$ inch, and on the shaft nil. The temperature of the engine-room was about 100° F., the water varying in temperature from 45° in winter to 65° in summer. The shafting ran quite cool.

The real condition of a bearing which habitually heats can only be ascertained by taking the parts to pieces, and when this has been done there is no excuse for not making every defect good.

Bearings which fit too closely are very apt to run hot; on the other hand, those which are too loose make a great noise, and the repeated blows not only tend to produce and develop flaws in the moving parts, but also to damage the surfaces. What should be aimed at is a free bearing in which there is just room for the oil-film to form.

Friction and serious heating may be produced by using a lubricant either too low or too high in viscosity. When the viscosity is too low, the oil-pressure film, which keeps the bearings of rapidly moving machinery from touching, does not form properly, and solid friction results. On the other hand, when the viscosity is too great, and the clearances small, the frictional resistance of the film may be so large that the bearing becomes warm or even hot. That it is best to use an oil having as small a viscosity as possible has been demonstrated over and over again, especially when, as in the case of textile or printing

---

[1] *Trans. Amer. Soc. Mech. Eng.*, xxvii. 432.

machinery and dynamos, the bearings run at high speeds and the loads per sq. inch are small. The heat liberated, and therefore the friction encountered, is proportional to the internal friction of the lubricant; and when it is remembered that at high speeds there is a continuous film of oil separating the surfaces, and that the friction in journals and spindles is proportional to the viscosity of the oil at the temperature of the film, it is clear that heating is as likely to be due to the want of fluidity of the lubricant as to actual metallic contact action. The best results are consequently obtained by using lubricants of the lowest permissible viscosity. Yet, frequently, the engineer in charge assumes that the heating results from the rubbing of the surfaces against each other, and is surprised to find that when he uses a thicker oil his bearings become still hotter.

Main engine bearings, the steps of which are separated into several portions, are very apt to run warm. This arises from the fact that the brasses are not always able to assume the relative positions, with regard to the journal, shown in fig. 204, p. 524, as they can in the case of the Michell bearing.

When there is only one bearing step, the shaft or journal can place itself in the position necessary to give it carrying power, but, on the other hand, when there are two or three separate brasses, they must have freedom to move into such positions that there shall be a wider gap on the " on " than on the " off " side. The degree of freedom required is very small.

It sometimes happens that a locomotive axle-box bearing, fed with oil through a hole and groove in the top of the brass, will run hot, and continue to do so, although every care has been taken to secure well-fitting faces. Now it has been repeatedly shown, especially with mineral oil, and, less markedly, with fatty oils, that when the oil is supplied in this way it is unable to properly wet the journal, being scraped off by the closely-fitting edges of the groove. Indeed, the better the fit of the brass and journal, the more the oil is confined and prevented from getting to the proper place, viz., the " on " side of the brass. As a rule, the side play of the brass enables it to mount on the curves at the ends of the journal, and in this manner the oil is liberated and runs over the journal. A couple of small grooves from the oilway to the ends of the brass will answer the same purpose and prevent overheating, provided the load be not too great (see also p. 520).

A siphon may cease to feed long before the oil reservoir is empty, and may thus mislead. The height to which the lubricant can be lifted from a reservoir by a trimming depends upon the fineness of the material of which it is made. Thus cotton wick will raise the liquid much higher than worsted. The latter material only lifts lubricating oils about 1¼ inches. Lubricator reservoirs are often made much deeper than this; and if not regularly cleaned out, they gradually become partially filled with a sticky, dirty mass. The better plan is to make them shallow and to clean them out often.

The quality of the wool or worsted has also a great influence on the rate at which the oil is siphoned. In some experiments made by the authors, the siphoning property of Berlin wool was compared under identical conditions with that of two different qualities of worsted, the same lubricating oil being used (mixture of mineral red engine oil and rape oil), with the same "lift" and at the same temperature. The results showed that the Berlin wool siphoned about twice as fast as the better of the two worsteds, and about three times as fast as the lower quality worsted. The results are set out in the diagram (fig. 269), which shows also the rapidity with which the rate of siphoning falls off as the " lift " increases.

A bearing which habitually runs warm cannot be considered as working properly, even if it never actually heats so badly as to necessitate a stoppage, for the coefficient of friction must be high and the waste of power considerable. Such a bearing has either got too much weight upon it, is not in line with other bearings on the same shaft, or its surfaces are grooved and the oil film cannot form. When this is the case, the shaft or journal, and also the brass, must be filed or machined to true faces. It occasionally happens that on taking the pedestal cap or brass from a bearing which has begin to get hot, the shaft or journal will be found to be badly flawed.

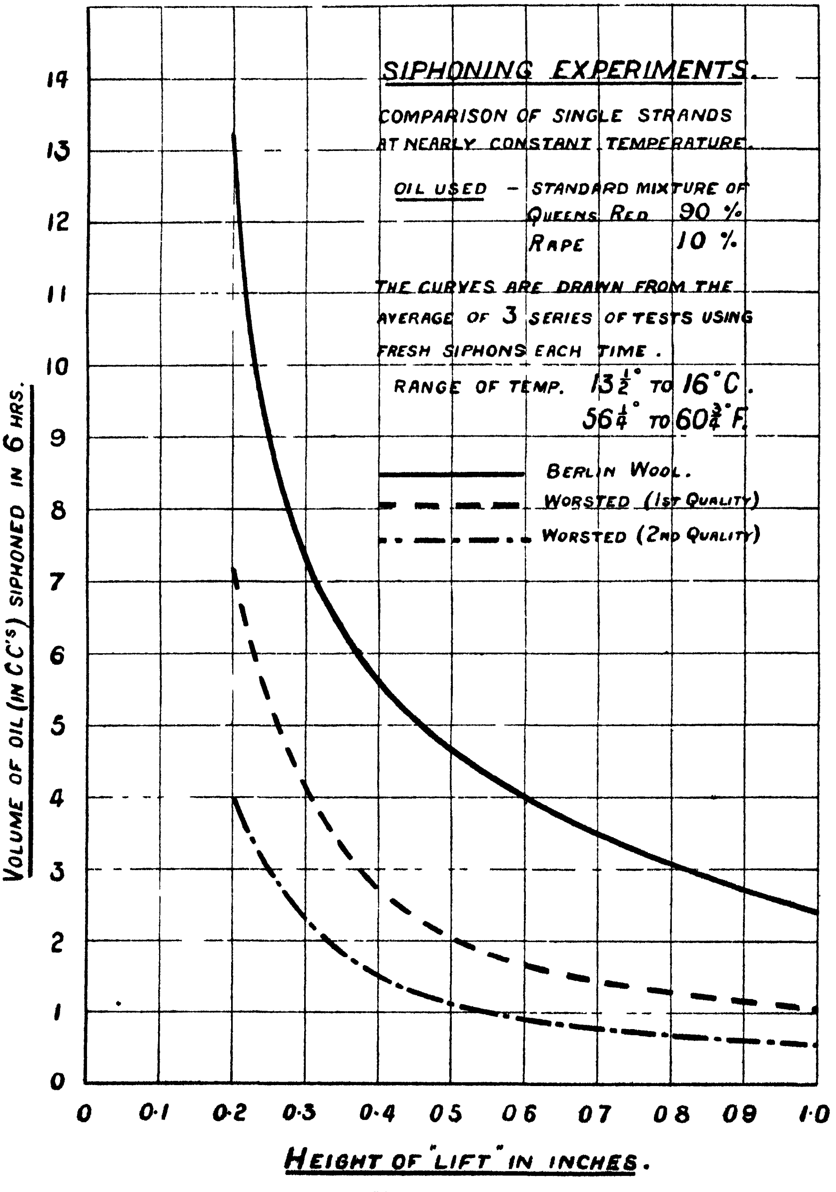

FIG. 269.

Selection of Lubricants.—Although it is clear that for each kind of bearing, speed, and load, only a comparatively few varieties of lubricants out of the great number placed by manufacturers on the market will be found to give equally good results, in practice the disadvantages resulting from having a large number of oils, etc., in use at the same time is so great that practical men, as a rule, prefer to use a few lubricants only, selected so that they shall answer as nearly as possible for all purposes. This limitation may, however, be carried to extreme lengths, and greater waste of power and damage to wearing surfaces caused than the convenience warrants.

But the advantages to be gained by carefully selecting lubricants according to the kind of bearing to be lubricated are clearly becoming more and more marked as time goes by, for the speeds at which machines run are becoming greater and greater each year, as are also the loads placed on many of the bearings. The conditions under which lubrication has to be effected are, therefore, rapidly becoming more diverse, and the time when the engineer could afford to use almost any lubricant placed on the market has passed away.

The scientific selection of lubricants can only be accomplished by ascertaining experimentally the extent to which different oils, etc., reduce wear and friction, for economy in the cost of oil is often only effected by greatly increased expense in other directions.

Cost and Efficiency of Lubricants.—Although in the selection of lubricants the price is an important factor, there is no real economy in using cheap but unsuitable oils. This will readily be seen when the actual expense incurred in their purchase is compared with that spent on fuel and on repairs. Indeed, it has been maintained with some show of reason that the consumer can frequently better afford to use the highest priced and best article than a lower priced and inferior one supplied free of charge. This is certainly the case with smaller mechanisms, such as sewing-machines, clocks, and the like.

Not only may the loss by friction be largely increased by using an unnecessarily thick lubricant, or the bearings become clogged by using a gumming oil, but the wear and tear of the surfaces may become very great and the life of the parts be much shortened by using a lubricant deficient in *oiliness.* It is, therefore, imperative that the chemical and mechanical, as well as the commercial, aspect of the question should receive careful attention. The experimentally ascertained quality, and not the price alone, must therefore be the guiding principle in the selection of lubricants.

By means of the physical and chemical tests enumerated and described in detail in previous chapters, the viscosity, gumming properties, acidity, flash-point, etc., of various lubricants can be ascertained in the laboratory. Recent work has shown that the comparative oiliness of lubricants can be ascertained by measuring their very low speed or static friction. Machines, and methods for their manipulation, have been fully described in Chapter X., p. 411, and it is now possible for the chemist or engineer to ascertain the comparative lubricating value of oils of the same viscosity.

An accurate estimate of the comparative value of different lubricants can only be made by carefully ascertaining the frictional losses each lubricant entails and comparing these losses with the total work done by the prime movers. Knowing the cost of the fuel, etc., used, the engineer can then calculate how much he is expending in unproductive work with varying conditions of lubrication. By occasionally weighing his pedestal brasses, valves, etc., he can also measure the rate of wear going on in his machinery. A knowledge of such points will enable him at once to see whether he is losing or gaining by the adoption of any particular lubricant or lubricants, and also to note the effect produced by changes of temperature. Such knowledge is easily gained by fixing indicators on steam or other motors when all or certain parts of the machinery are running light, also when each machine has its full load, and again under normal conditions. In all cases when the power used is an important item, these observations should be made periodically, the results entered up for future reference, and a balance-sheet drawn up so as to enable the cost of power, and also of lost work, etc., to be compared with the expense incurred on lubricants.

Various **dynamometers** have been devised for measuring the power required to drive machinery. These instruments are introduced between the motive power and the machine, and measure the power transmitted, either by the compression of a spring, or by means of a weighted lever. An apparatus of this kind, known as Emerson's Transmission Dynamometer or Power Weighing Scale, is illustrated in fig. 270. For this block we are indebted to Messrs. Geo. Thomas & Co., of 60 Deansgate, Manchester, to whose pamphlet we must refer our readers for further particulars.[1] The following results, which were obtained by applying one of these scales to a corn crusher, were kindly communicated to us by J. T. Potts:—

Material crushed.	Revs. per Minute.	Lbs ground per Minute.	Horse-power required.
Oats, . . .	161	8·3	0·874
Maize, . . .	161	14·8	0·247
Beans, . . .	161	17·7	0·410

When the crusher was moderately well lubricated, it required only 0·01 horse-power to drive it when doing no work; when allowed to go without oil for several days, the power was increased to 0·05 horse-power; whilst on thoroughly well oiling it the power required fell to 0·005 horse-power. It is evident that an appliance of this kind may prove very valuable in a large mill in determining the relative friction-reducing powers of various lubricants.

Michell[2] has invented an attachment for his thrust-bearing block which enables the thrust of the propeller of a ship to be measured accurately at any time. By means of two hydraulic rams, acting on two segments of his thrust bearing, the entire thrust on the shaft can be carried, and the oil pressure in these rams is a measure of the force of the thrust. In the case of a geared turbine the thrust is constant, and it can be measured by means of an ordinary pressure gauge. However, in the case of a reciprocating engine, the thrust pressure is variable. It is then measured by means of an indicator, which shows all the variations occurring during each revolution of the screw shaft.

Frictional Losses.—*Magnitude of Losses.*—The losses which arise from the friction of the mechanism, as compared with the total energy actually expended in useful work, are in many cases unduly large. As an extreme case, a clock or watch may be instanced. Here, practically the whole of the power is expended in overcoming the friction of the bearings, and the efficiency is zero. Should the friction of the pinions increase or diminish from any cause, then that of the speed-regulating appliance likewise diminishes or increases, the total friction remaining constant.

In a cotton mill, woollen factory, or printing works, the frictional losses are very large compared with the power actually developed. Here we have to deal with losses in the motor, the transmission machinery, and also in the actual machine tool, the power expended in placing the threads in position, or propelling the paper, ink, rollers, etc., being small. In electric-light and hydraulic stations the efficiency of the installation is greater, for the total

---

[1] A similar instrument is supplied by the Florence Co., of Florence, Mass.

[2] *Engineering*, 7th September 1923.

power delivered in the form of current, or volume of water raised, is large in comparison with that developed by the motors.

Ordinary atmospheric changes of temperature have at times been known to alter the friction of the machinery of a large mill as much as 15 or 20 per cent. In other instances a reduction of 50 per cent. in the total resistance, and, therefore, of the fuel, etc., used, has been effected by using a more suitable oil. When it is remembered that this means that the frictional loss sometimes amounts to considerably more than half the power developed by the motor, the importance of using a suitable lubricant will be fully appreciated.

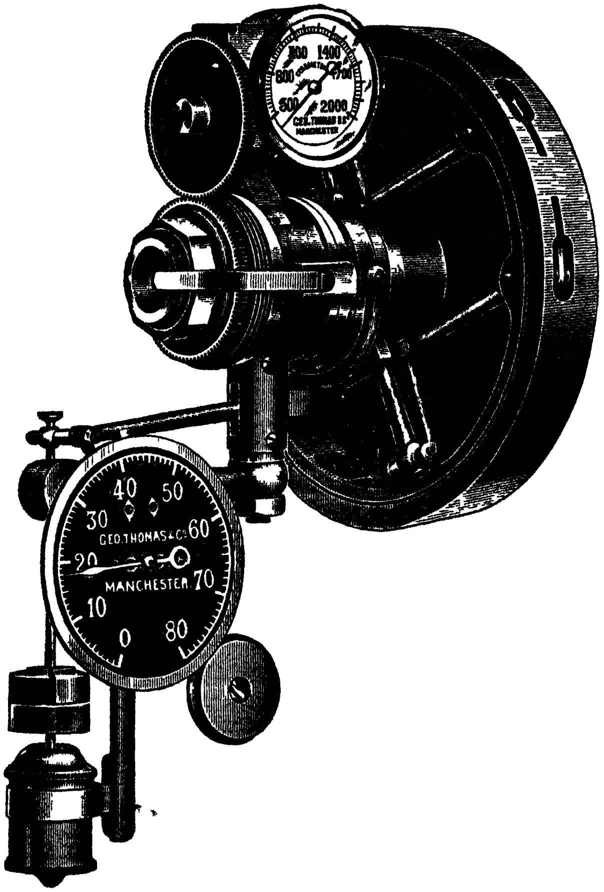

FIG. 270.

As the viscosity decreases, sometimes rapidly, with rise of temperature, a lubricant which may be suitable for one season or country may not suit another. The effects brought about in this way may be seen by comparing the coal burned from week to week during the year with the changes the mean temperature has undergone during the same intervals. In railway work this is particularly noticeable, the coal consumption, partly on this account, being much greater during winter months than in the summer.

After a mill has stood even for a day, the bearings will have cooled down so much that considerably more power will be required to work it during the first few hours than during the rest of the next run, providing the temperature of the air does not fall much in the interval. This must be borne in mind when, for the purpose of ascertaining the efficiency of any particular lubricant, the indicated horse-power required to drive a mill is measured.

The Efficiency of Mechanism.—In a machine shop or factory where power is used for carrying on any process, we generally have a *prime mover* which renders available the energy derived from some natural source, and *transmission machinery* for conveying the power so obtained to any point for the actuation of *special machinery* or *machine tools.* The mechanical efficiency of the motor or of any link in the mechanism involved in the transmission of power is obtained by dividing the useful work performed by the gross energy expended. Thus, in the case of a steam engine, if the indicated horse-power be 100, and the work actually delivered on the belt be 85, the efficiency would be 0·85.

In some cases the losses arising from the friction of shafting, etc., are so great that it is more economical to transmit the power electrically from the prime mover to the machine, which is then fitted with a small electromotor.

In modern factories and workshops heavy shafting and gearing are dispensed with as much as possible, each large machine being driven by a separate motor. Small machines are grouped in convenient units, being driven by electric motors operating shafting running on ball bearings or pedestals designed to give bath or pad lubrication. In this way great economies are secured in fuel and other costs, the losses of power transmission being small even when small sections only of the plant have to be worked. Lubrication costs are also very much reduced, the bearings requiring very little attention and wasting little or no oil or grease.

Economical Lubrication.—Before one can establish the fact that a particular oil is more economical in use than another, a balance-sheet must be drawn up showing the total expenses chargeable to each of the following items :—

1. Cost of power developed.
2. Cost of proportion of power lost in friction.
3. Expenses resulting from wear and tear.
4. Cost of lubricants.

When the lubricants are very unsuitable, the bearings improperly designed, or there is careless management, other losses may be incurred which will not fall under either of the above heads. They include broken shafts, heated bearings, rapid wear, etc. It is such signs that often first direct attention to the fact that the lubricants in use are unsuitable. Even when such accidents are comparatively rare, the loss by friction may be much greater than it ought to be, and the fact that comparatively little difficulty is experienced in keeping the bearings from actually getting hot should not be regarded as showing that good results are being obtained as regards economy of power.

Indicating of Motors.—When once the necessary gear has been fitted for indicating an engine or ascertaining the power developed by an electric motor, the difficulty of ascertaining the horse-power required to drive the plant at any given moment is very small. Apart from the question of friction, a large steam engine should have indicator diagrams taken periodically, for the purpose of ascertaining whether the valves are properly set and the distribution of steam satisfactory. For the best method of procedure, a work on the indicator should be consulted. We may here point out, however, that fluctuations in speed and power are produced by the action of the governors, etc., from minute to minute, and that accurate figures can only be obtained by making a series of observations extending over a reasonable interval of time, the mean of the results obtained from each set of indicator cards being made use of.

Estimation and Cost of Frictional Losses.—As in many cases almost the whole of the losses are due to the friction of lubricated bearings, the losses due to each portion of the mechanism should, as far as possible, be ascertained separately. This may be done by obtaining the indicated horse-power under the following conditions:—

(*a*) Motor running light.
(*b*) With the transmission machinery in motion.
(*c*) With all the machines, or certain types of machines, running light.
(*d*) With all the machines, or certain types of machines, having their full working load on.

As the viscosity of lubricants varies with the temperature, the tests to ascertain the comparative lubricating values of two oils, etc., should be made under similar atmospheric conditions, and it is of equal, if not of greater, importance to give the bearings time to assume a steady temperature by indicating the motor at the end of a few hours' run.

To obtain the actual cost per hour per horse-power developed in ordinary running, the calculation should include the following items:—

1. Interest on cost of land, plant, and buildings.
2. Depreciation (maintenance and renewal).
3. Taxes, insurance, etc.
4. Wages and salaries.
5. Cost of fuel, oil, sponge cloths or cotton waste, etc.

Here we have a number of charges which increase or decrease the cost of power according as the mean output decreases or increases. It may be argued that the saving effected by improving the lubrication, inasmuch as it does not decrease some of these items, should be calculated upon the saving in item 5 only. However, when the saving in power is large, it may affect depreciation and wages as well. This is a point the consideration of which must be left to the judgment of the engineer in charge.

It has been shown that the friction of a steam engine or gas engine is unaffected by the load put upon it. Thus if, when running light, the indicated horse-power is 7, then, when the brake horse-power is 50, the indicated horse-power will be 57. From this it is clear that the frictional resistance, measured when there is no load on the engine, gives the frictional resistance under all conditions. The same will often apply to line shafting and to many machines and machine tools. We may, therefore, estimate very closely the friction-reducing properties of any particular lubricant by running the machinery oiled with it light, rather than fully loaded; care must, however, be taken always to have the same number of machines running when making a test.

When the horse-power developed by the motor is large, and the machines numerous, the effect of changing an oil can only be ascertained by using it on a large number of bearings or machines, so as to make the loss or gain of power considerable in proportion to the total effect.

By multiplying the gain or loss of power by the cost per horse-power, and then by the hours worked per diem, the daily saving or loss is obtained, and by comparing this with the oil account the real commercial value of the lubricant is ascertained. The point has been dealt with at some length by R. H. Thurston.[1]

Since the increase in friction of a bearing results in a rise of the temperature of the pedestal, a rough idea of the comparative value of two lubricants may be obtained by measuring their temperature effects. This is most satisfactorily

---

[1] *Friction and Lost Work*, p. 343.

effected by surrounding two bearings on a shaft by roomy boxes, to protect them from draughts, and placing thermometers in contact with the pedestal caps. The same oil should first be tried on both bearings, and the rise of temperature of each noted, for with the same oil different bearings will almost always be found to give somewhat different heating results. When the difference of temperature which results from the accidental difference of load or condition of each bearing has been ascertained, the oil used for one of them may be changed and a comparative test again made. This should be done several times, for the result depends in some measure upon the rate of feed.

It is, however, much more satisfactory to make such oil-tests with proper oil-testing machines, for the load, speed, and the rate of and method of feed can then be properly controlled.

Estimation of Losses due to Wear.—These can only be obtained in a direct way by comparing the expense incurred in repairs, renewals, and breakdowns which have occurred during fairly long intervals of time. However, it is sometimes necessary to obtain the effects produced during short intervals by different lubricants, in which case the best plan is to weigh certain brasses or other rubbing parts, such as piston rings, at stated intervals on an accurate balance. In this way any rapid increase or decrease in the rate of wear can be noted, and this, taken in connection with the pecuniary gain or loss resulting from the variation in the total frictional losses, will enable the engineer to form a fairly accurate estimate of the value, from a practical point of view, of any particular lubricant.

In all cases where frictional losses form a large proportion of the power developed, it will be found that the cost of the lubricant, being only about 3 per cent. of the cost of fuel, is a comparatively insignificant item compared with that of the power saved or lost. Indeed, it will frequently pay to use the best lubricant irrespective of its price. The highest-priced lubricant offered, however, is often by no means the best, for very poor mixtures have sometimes been placed upon the market as first-class lubricants and sold at high prices.

Oil-cans, Feeders, etc.—Vessels for holding a supply of oil and enabling it to be supplied to the bearings with ease and certainty are made of various patterns. In some cases it is only necessary to supply a few drops once every few hours. For this purpose small conical or lenticular cans, having a long spout screwed on, are convenient. Either the bottom or sides are made elastic, and a little pressure exerted compresses them and expels a small quantity of oil. In the larger forms the oil is liberated by opening a small valve actuated by a button, or the piston of a small cylinder is pressed in and any desired amount of oil delivered.

It sometimes happens that the reservoirs of oil-bath bearings have to be emptied and filled again periodically. For this purpose a form of syringe is used which enables a definite quantity to be withdrawn from the bottom of the reservoir and fresh oil substituted.

APPENDIX.

BRITISH STANDARD METHOD FOR THE DETERMINATION OF VISCOSITY IN ABSOLUTE UNITS.

Abstracted by permission from Specification No. 188–1923. Issued by the British Engineering Standards Association.[1]

UNITS.—The fundamental unit of measurement shall be the Poise, which is the name given to the C.G.S. unit. For liquids of low viscosity it is convenient to use a derived unit, namely, the Centipoise (=0·01 Poise).

Note.—The viscosity of distilled water at 20° C. is very nearly 1 centipoise.

TUBE VISCOMETERS.—The Tube Viscometers dealt with in this specification are of two forms:—

(1) U-tube Viscometer (see Plate I.);
(2) Co-axial Bulb Viscometer (see Plate II.);

and are generally suitable for liquids the viscosity of which does not exceed 15 poises.

(*a*) *Selection of Tube.*—Whichever form be employed, the tube DE (Plate I.), or ST (Plate II.), shall be so selected that the time of flow in any determination is not less than 60 seconds and preferably not less than 100 seconds. It is advisable that the length of the capillary be about 10 cm., in which case its diameter, which depends upon the kinematic viscosity of the liquid under observation, shall be not greater than the value given in Table I.

TABLE I.

Viscometer No.	Kinematic Viscosity.	Upper Limit of Diameter.
1	0·009 to 0·072	0·54 mm.
2	0·054 ,, 0·43	1·3 ,,
3	0·32 ,, 2·6	2·8 ,,
4	1·9 ,, 15	5·3 ,,

Note.—Kinematic viscosity $=\dfrac{\text{viscosity }(\eta)\text{ in poises}}{\text{density }(d)\text{ in grm. per c.c.}}$

(*b*) *Volume of Bulb.*—The volume of the bulb in either form depends upon the diameter of the tube and the mean head of liquid. Table II. gives the smallest volume of bulb which should be used for the tubes referred to in Table I.

TABLE II.

Viscometer No.	Diameter of Tube (d).	Volume of Bulb (v).
1	0·54 mm.	1·2 c.c.
2	1·3 ,,	7·0 ,,
3	2·8 ,,	23·0 ,,
4	5·3 ,,	50·0 ,,

---

[1] Copies of the complete specification can be obtained from the Secretary of the B.E.S.A., 28 Victoria Street, Westminster, S.W. 1; price 1s. 2d. post free.

If the diameter (d_1) of the tube actually employed in the construction of the viscometer be less than that given in the above table, then the smallest permissible volume (v_1) of the bulb will be correspondingly decreased. Table III. gives the data necessary for calculating the smallest permissible volume in such cases.

TABLE III.

$d_1 : d$.	$v_1 : v$.
1·000	1·00
0·975	0·90
0·950	0·81
0·925	0·73
0·900	0·66
0·875	0·59
0·850	0·52
0·825	0·46
0·800	0·41
0·775	0·36
0·750	0·32

(*c*) *Construction of the Viscometer.*—The viscometer shall be constructed of glass of the quality specified (*Quality of Glass*) on p. 621. All tubing employed in the construction shall be of the same composition, and the finished viscometer shall be thoroughly annealed. Alternatively, clear silica may be used in the construction of the instrument.

STANDARD DIMENSIONS FOR U-TUBE VISCOMETERS.

Standard U-tube Viscometers (see Plate I.) shall be in accordance with the dimensions given in Table IV.

TABLE IV.

Viscometer No.	1.	2.	3.	4.
Range (poises), . . .	0·009–0·072	0·054–0·43	0·32–2·6	1·9–15
Tube AB—Length, . . cm.	5	5	5	5
Int. diameter, „	0·2	0·5	0·7	0·7
Bulb BC—Int. diameter, . „	1·2	2·0	2·8	3·2
Capacity, . c.c.	1·15	6·5	20	32
Bulb CD—Capacity, . „	0·1	0·4	1·2	1·4
Capillary DE—Length of parallel portion, cm.	10	10	10	10
Int. diameter, „	0·054	0·12	0·24	0·40
Bent tube EF—Int. diameter not less than cm.	0·2	0·5	0·7	0·8
Bulb FG—Int. diameter, „	1·2	2·0	2·8	3·2
Capacity not less than . . c.c.	1·25	7·0	21·5	33
Tube GH—Int. diameter, cm.	0·2	0·5	0·7	0·7
Distance between vertical axes, cm.	1·1	1·6	2·1	2·3
Vertical distance between centres of bulbs CB and FG, ... cm.	5	7	8	10
Vertical distance of Mark M above Mark G, . . cm.	0·58	0·26	0·12	0·07

Note.—The thickness of the glass walls shall nowhere be less than 0·15 cm.

The bulbs BC and FG have been shown on Plate I. as consisting of two right cones and a cylinder, *i.e.* the slopes are 45 degrees at each end. In actual construction it is important to obtain approximately the correct capacity and height. To ensure good drainage, the slope of the conical portions should be 45 degrees as shown, and the inner surfaces must be smooth, although the junctions between the cones and the cylinders will in practice not be so sharp.

The junctions at D and E shall be trumpet-shaped and smooth as shown on Plate I.

The bend of the U-tube shall be free from any constriction. The etched marks at B, C, M, and G shall be in a plane at right angles to the axis of the tube, and should extend round the tubes.

STANDARD DIMENSIONS FOR CO-AXIAL BULB VISCOMETERS.

Standard Co-axial Bulb Viscometers (see Plate II.) shall be in accordance with the dimensions given in Table V.

TABLE V.

Viscometer No.	1.	2.	3.	4.
Range (poises), . . .	0·009–0·072	0·054–0·43	0·32–2·6	1·9–15
Int. diameter of tube PQ, cm.	0·2	0·5	0·6	0·6
Int. diameter at R, . ,,	0·1	0·4	0·6	0·6
Volume of bulb RS, . c.c.	1·15	6·5	20	32
Int. diameter at S, . . cm.	0·10	0·12	0·24	0·4
Capillary ST—Length, . cm.	10	10	10	10
Int. diam., ,,	0·054	0·12	0·24	0·4
Difference between ext. diam. of ST and int. diam. of UW, cm.	0·2	0·2	0·4	0·6
Vertical distance from mark S to contraction of tube at U, cm.	4·0	4·0	4·0	4·0

Note.—As regards the construction of the bulb RS (see Plate II.), the same remarks apply as for the bulbs BC and FG (Plate I.).

The clearance between bulbs QR and RS and the outer tube shall be about 1 mm. The volume of the bulb QR shall be such that the liquid from QR will fill the outer tube up to U.

The ground joint at V shall be slightly conical and be well fitting over the length (1 cm.) of the cone.

The junction at S shall be trumpet-shaped and smooth.

Instead of the ground joint and exit tube shown on Plate II., a suitably bored cork may be used, in which case a mark should be etched on the outer tube to indicate the level to which the mark R must always be adjusted.

(*d*) *Checking the Construction.*—The accuracy of construction of any viscometer may be roughly checked by noting whether the time of flow of the appropriate liquid given in Table VI. lies between the maximum and minimum values tabulated for the temperatures 20° C. or 25° C.

TABLE VI.

Viscometer No.	Liquid to be used.	Time of flow in seconds.	
		At 20° C.	At 25° C.
1	Water, ...	95 to 150	85 to 135
2	40 per cent. sugar solution,* .	80 ,, 130	70 ,, 110
3	Refined rape oil, . . .	300 ,, 490	240 ,, 390
4	Castor oil, ...	460 ,, 730	300 ,, 480

* See p. 621 (*Standard Liquids for Calibration*).

(e) *Use and Calibration.*—(i) *Cleaning the Viscometer.*—Before the viscometer is used, and whenever, owing to discordant duplicate readings, etc., the presence of dirt is suspected, it should be cleaned by filling with a mixture of equal volumes of concentrated sulphuric acid and of a cold saturated solution of potassium bichromate and allowed to stand over-night. Suitable solvents should, however, be first applied to remove as completely as possible the liquid last used in the viscometer.

(ii) *Temperature.*—The viscometer when in use shall always be immersed in a bath of liquid to such a depth that the highest level of the liquid in the viscometer is at least 1 cm. below the level of the bath liquid. The liquid in the bath shall be well stirred and its temperature regulated, automatically or by hand, for a sufficient period before and throughout the test, so that the extremes of temperature indicated do not differ by an amount large enough to cause a change of 1 per cent. in the time of flow. For Viscometer No. 1 this preliminary period need not be much more than 10 minutes, while for Viscometer No. 4 it must be increased to at least 30 minutes.

In order to obtain the same percentage accuracy in the determination of viscosity, more accurate temperature regulation is required for the more viscous liquids. Thus an error of 1 per cent. in viscosity would result with the liquids mentioned in Table VI. from the following deviations from the specified temperature, the viscosity decreasing with rise of temperature.

TABLE VII.

Liquid.	Deviation.
Water, ...	0·4° C.
40 per cent. sugar solution, . . .	0·3° C.
Refined rape oil, ...	0·2° C.
Castor oil, ...	0·1° C.

(iii) *Filling the Viscometer.*—U-tube Viscometers should be filled so that when one meniscus is accurately adjusted at the temperature of the experiment to one of the filling marks, M or G (Plate I.), after thorough draining[1] if necessary, the other meniscus is within 0·2 mm. of the second filling mark.

In the case of the Co-axial Tube Viscometers, the liquid at the temperature of the experiment is adjusted to the mark Q (Plate II.) and the drop at the bottom of the tube removed before the central portion is placed in the outer vessel.

Note.—A second tube, similar to the outer vessel in diameter but not contracted at the bottom, is convenient for this purpose, in order that the liquid and viscometer tube may be brought to the desired temperature before adjustment.

(iv) *Inclination to Vertical.*—The capillary of the instrument should be vertical. The maximum permissible deviation from the vertical is :—

1 degree in the case of U-tube Viscometers.
5 degrees in the case of Co-axial Bulb Viscometers.

(v) *Carrying out an Observation.*—The liquid is blown or sucked up to 1 cm. above the mark B (Plate I.) or to the bottom of the bulb above R (Plate II.).

It is then allowed to flow, and the time of flow between the marks B and C or the marks R and S is determined by means of a reliable stop-watch reading to ⅕ second. The watch should be fully wound up before each observation.

Note.—It is recommended that the stop-watch be checked at frequent intervals.

Three readings concordant to 1 per cent. should be obtained and the mean taken.

(vi) *Calculation of the Viscosity.*—In order that the viscosity may be calculated, the density of the liquid under test must be determined at the same temperature.

---

[1] By thorough draining is to be understood draining to an extent such that the adjusted level of the liquid does not alter by more than 0·2 mm. during a further period of 10 minutes in the case of liquids having viscosities up to 0·1 poise, and 30 minutes for liquids with higher viscosities.

If t be the time of flow and d the density of the liquid under test, t_0 and d_0 the corresponding values for a standard liquid of viscosity η_0, then the viscosity η of the liquid under test is given by

$$\eta=\eta_0\frac{td}{t_0d_0}.$$

It is convenient to calculate the "factor" $K=\frac{\eta_0}{t_0d_0}$ for each viscometer; η is then given by

$$\eta=Ktd.$$

Within the limits of accuracy considered, the value of the factor K is not affected by expansion of the glass due to temperature changes between 0 and 100° C.

STANDARD LIQUIDS FOR CALIBRATION.

For the calibration of the viscometers, the following liquids are recommended as standards, namely :—

For Viscometer No. 1.—Distilled water, for which liquid the following data apply :—

Temperature ° C., . .	20°	25°
Viscosity in centipoises, .	1·005	0·894

For Viscometer No. 2.—40 per cent. sugar solution.

For Viscometer No. 3.—60 per cent. sugar solution.

These solutions shall be prepared by dissolving 40 or 60 grms. of pure dry cane-sugar (sucrose), respectively, in sufficient hot water to produce 100 grms. of solution. The solutions shall then be filtered and their densities determined at 25° C. and corrected for buoyancy. The viscosities of the solutions are then ascertained from the following formula :—

$$\log\eta=\bar{1}\cdot95134+2\cdot9728x+3\cdot2212x^2+24\cdot254x^3$$ [1]

where η=viscosity in centipoises at 25° C.

and $x=d-d_w$

where d=density of solution at 25° C.

d_w=density of water at 25° C.=0·99707.

Thus the viscosity of the sugar solution, the density of which at 25° C. is 1·17439, is 5·187 *cp*.

For Viscometer No. 4.—No primary standard available.

In order to calibrate a No. 4 Viscometer, it is necessary to use a viscous liquid such as castor oil, the viscosity of which must be determined by "stepping up."

The liquid is filled into a No. 3 Viscometer, the constant K_3 for which has been determined and the time of flow t observed.

The liquid is then filled into the No. 4 Viscometer, and the time of flow, at the same temperature as that used previously, observed.

Let this be t': then the constant K_4 of the No. 4 instrument is given by

$$K_4=K_3\frac{t}{t'},$$

$$\text{since } \eta=K_3td=K_4t'd.$$

This process of "stepping up" may be employed for any pair of viscometers, provided the time of flow of the liquid in either viscometer is not less than 100 seconds.

QUALITY OF GLASS.

I. The glass used in the construction of viscometers shall be homogeneous, transparent, not more than slightly coloured, and free from all mechanical imperfections such as "cords," "stones," etc.

II. The glass must possess satisfactory chemical durability when tested as follows :—

A piece of the glass tubing shall be boiled for six hours in neutral distilled water

---

[1] This equation is based upon the measurements recorded in Scientific Paper No. 298 of the U.S. Bureau of Standards. Care should be taken to ensure, by determination of its density, that the sugar solution is of the correct strength before the viscosity figures given in this paper are used.

contained in a silica beaker, sufficient water being taken to ensure that the glass is completely covered. At the end of the period of boiling :—

(*a*) The water shall not give an alkaline reaction when tested with phenolphthalein as indicator.
(*b*) The glass shall not have become clouded.
(*c*) The glass shall not become clouded on drying at 100° C. for two hours after the foregoing treatment.
(*d*) Any alteration in weight of the glass after drying shall not exceed ±0·5 milligram per square decimetre.

III. The glass shall not discolour, devitrify, or "bloom" on lampworking, and it shall be free from appreciable thermal afterworking. The finished viscometer, when empty, must withstand rapid heating and cooling through 80° C. without cracking. The test shall consist in heating the viscometer to 100° C. in a bath of water for five minutes, and then transferring it rapidly to water at 20° C. After remaining in the cold water for five minutes, the viscometer shall be rapidly replaced in a bath of boiling water.

PLATE I.

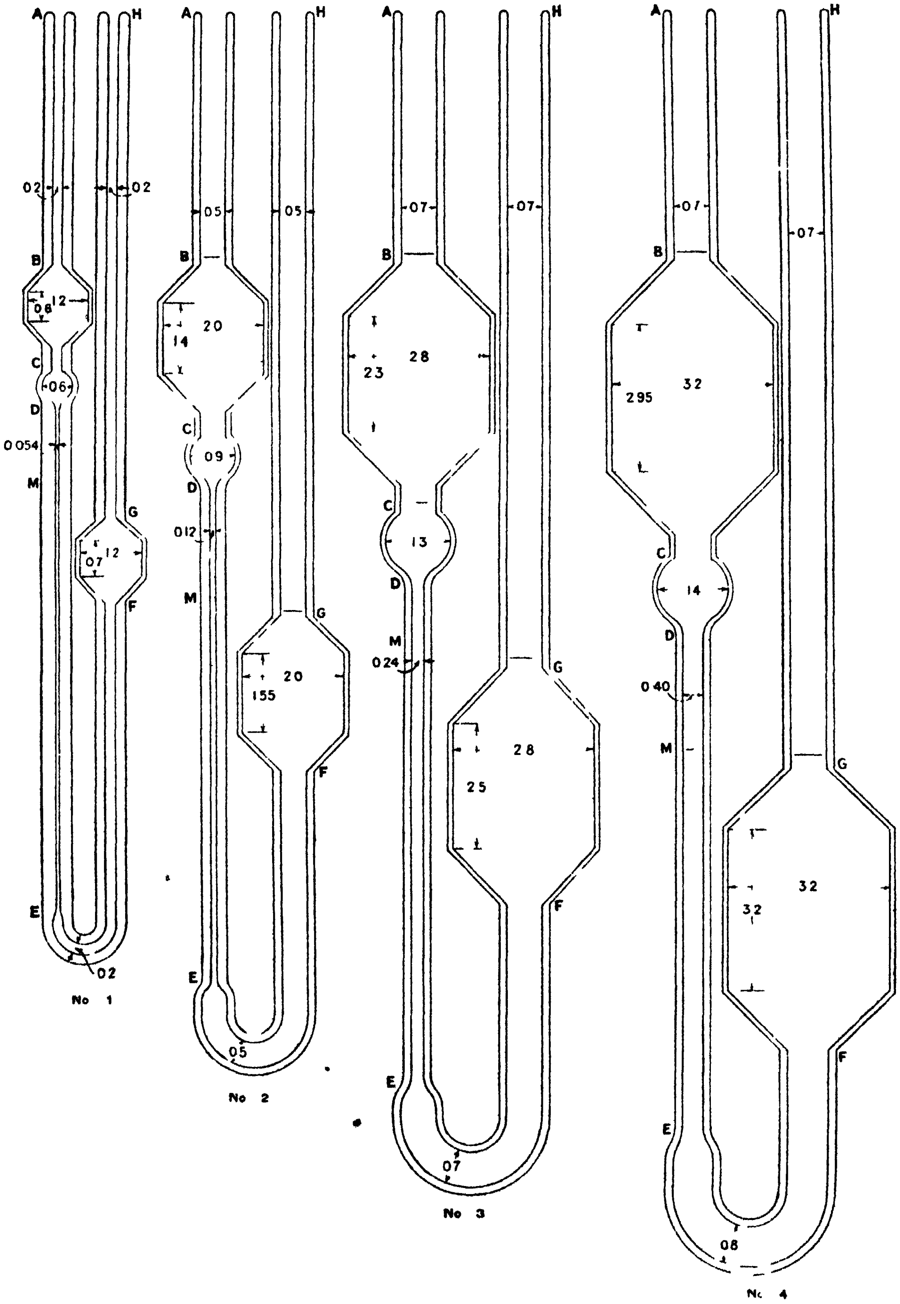

STANDARD U-TUBE VISCOMETERS. All dimensions in centimetres. Scale ⅜ size.

Plate II

STANDARD CO-AXIAL BULB VISCOMETERS

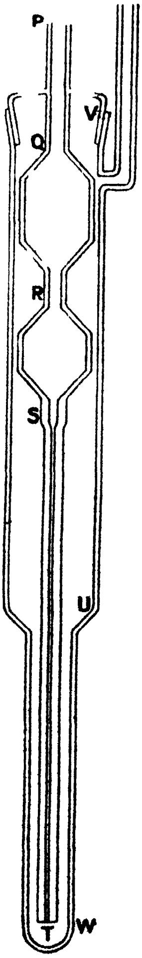

No 1

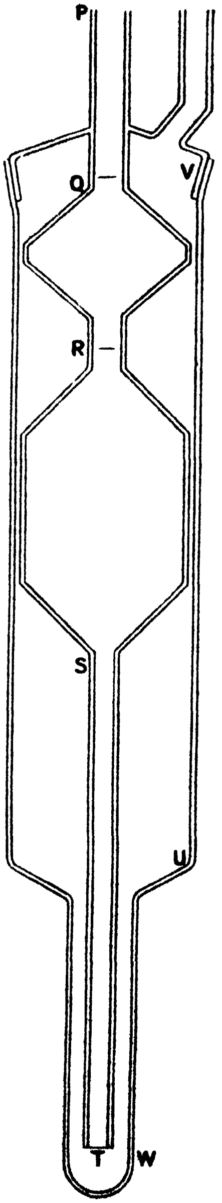

No 4

INDEX.

PRINTED IN GREAT BRITAIN BY NEILL AND CO. LTD., EDINBURGH.