INTERACTION CURVES FOR DESIGN OF HOLLOW REINFORCED CONCRETE COLUMNS

THESIS

SUBMITTED IN PARTIAL FULFILMENT OF
THE REQUIREMENTS FOR THE DEGREE OF

DOCTOR OF PHILOSOPHY

BY

RANJAN KUMAR

UNDER THE SUPERVISION OF

PROF. S. N. SINHA

BIRLA INSTITUTE OF TECHNOLOGY & SCIENCE

PILANI (RAJASTHAN) INDIA
1994

ACKNOWLEDGEMENTS

It is with a sense of deep gratitude and immense pleasure that I extend my thanks to Dr. S. N. Sinha, Professor, Department of Civil Engineering, IIT Delhi, for his invaluable advice, encouragement and constructive guidance at every stage of this research work carried out under his able supervision.

I express my sincere gratitude to the Birla Institute of Technology & Science, Pilani, and in particular to Dr. L. K. Maheshwari, Dean, Research & Consultancy Division, and his colleagues for providing me the opportunity to take up this research work, and for their sustained cooperation and invaluable guidance.

My sincere thanks are due to my colleagues Mr. P. K. Sreekumar for word-processing the entire thesis, Ms. Suprabha J. and Ms. Susan Gibson for drawing the figures, Mr. Neeraj Billa for plotting the design charts through CAD and Mr. T. S. Rawat for printing and photocopying work.

I am indebted to my parents, my wife Rupam and sons Rajit and Shobhit for their encouragement, patience and perseverence during this work.

Ranjan Kumar

(RANJAN KUMAR)

BIRLA INSTITUTE OF TECHNOLOGY & SCIENCE

PILANI RAJASTHAN INDIA

CERTIFICATE

This is to certify that the thesis entiled **"Interaction Curves for Design of Hollow Reinforced Concrete Columns"** and submitted by Mr. Ranjan Kumar, ID. No. 91PHXF401 for award of Ph.D. Degree of the Institute, embodies original work done by him under my supervision.

Date: 27.10.1994

Dr. S.N. Sinha
Professor
Department of Civil Engineering
Indian Institute of Technology, Delhi
India.

PREFACE

The research work presented in the thesis has been conducted over a period of three years. During this period the following eight papers have been published / communicated.

1. Kumar Ranjan and Sinha S.N. ; "Design Aids for I/H - Shaped Reinforced Concrete Columns" ; The Bridge & Structural Engineer, Vol. XXIII, No.3, September 1993, pp. 61-88.

2. Kumar Ranjan and Sinha S.N. ; "Design Aids for Hollow Rectangular Reinforced Concrete Columns"; Journal of Structural Engineering, Vol.20, No.4, January 1994, pp. 195-206.

3. Kumar Ranjan and Sinha S.N. ; "Interaction Curves for Hollow Circular and Hexagonal Reinforced Concrete Columns" ; The Bridge & Structural Engineer, Vol. XXIV, No. 2, June 1994, pp.15-31.

4. Kumar Ranjan and Sinha S.N. ; "Interaction Curves for Design of Hollow Reinforced Concrete Column Sections based on BS:8110" ; Journal of the Institution of Civil Engineers, London. (communicated)

5. Kumar Ranjan and Sinha S.N. ; "Design Aids for Hollow Rectangular Reinforced Concrete Columns with Large Opening" ; Journal of Structural Engineering, SERC Madras. (communicated)

6. Kumar Ranjan and Sinha S.N. ; "Interaction Curves for Circular Hollow Reinforced Concrete Columns with Large Opening" ; The Bridge & Structural Engineer, Journal of ING-IABSE. (communicated)

7. Kumar Ranjan and Sinha S.N. ; "Interaction Curves for Design Hollow Reinforced Concrete Columns with Large Opening based on BS:8110" ; Journal of The Institution of Structural Engineers, London. (communicated)

8. Kumar Ranjan and Sinha S.N. ; "Design Aids for I/H - Shaped Reinforced Concrete Columns based on BS:8110" ; Structural Engineering and Mechanics, Techno Press, Taejon, Korea. (communicated)

TABLE OF CONTENTS

CHAPTER 3 : COMPUTATIONAL APPROACH FOR STRENGTH OF RC COLUMN SECTION

CHAPTER 4 : INTERACTION CURVES FOR HOLLOW RC COLUMNS WITHOUT OPENING

CHAPTER 5 : INTERACTION CURVES FOR HOLLOW RC COLUMNS WITH LARGE OPENING

CHAPTER 6 : INTERACTION CURVES FOR I/H SHAPED RC COLUMNS

APPENDICES : DESIGN CHARTS

ABSTRACT

This thesis presents a set of INTERACTION CURVES for design of Hollow Reinforced Concrete columns based on the limit state method as per the provisions of IS:456-1978[61]. Interaction curves are plots of the ultimate moment carrying capacity of a column section about its two orthogonal axes for given values of axial load and percentage of steel reinforcement. A set of interaction curves covering a wide range of axial load levels and steel peercentages (called DESIGN CHART) can be used for quick design of hollow reinforced concrete column sections of various shapes subjected to axial load and moments.

Modern architects of large public utility and commercial buildings often adopt "Pylon" type columns (i.e. columns having large girth) from aesthetics as well as utility considerations. The pylons are kept hollow so that service lines could be run through them. Besides aesthetic and functional benefits, hollow columns afford a distinct structural advantage as they give much higher moment of resistance per unit volume of concrete as compared to solid core columns. Therefore, where the column is required to resist very high bending moments resulting from heavy lateral loads applied at higher levels, hollow columns would be the most economical choice. Chimneys, high-rise stagings of liquid retaining structures, television towers, lift wells, columns of large span roofing systems etc. come under this category.

Rectangular, circular and hexagonal shaped hollow columns have been considered for developing interaction curves for their design in this thesis. As inner space of hollow columns is utilised for service lines, provision of door opening at floor levels becomes inevitable. At such locations the hollow column section acquires a cee shape due to the large door opening. Also, the I or H shaped section, which is another variation of rectangular cee section is very efficient under bending moments of high magnitude. A combination of I/H shaped sections can be effectively used as shear wall in high-rise buildings. Therefore, interaction curves for cee shaped rectangular and circular columns, as well as I/H shaped columns have been included in the thesis.

Strength of reinforced concrete columns under axial load and biaxial moments can be obtained by computer aided numerical method based on codal provisions with regard to limits of strain in concrete and steel reinforcement. Several methods for analysis and design of column sections under axial load and biaxial moments have been proposed by Marin[82], Magalhaes[75] and Sturrock[137]. Extensive literature is available on interaction curves for rectangular and circular column sections[21,46,126,135] while very limited studies are available on other shapes. For L, T and + shapes of column sections, some studies have been reported by Marin[83], Muller[92] and Sinha et.al.[127,129]. Extremely limited studies are available on hollow reinforced concrete columns. Procter[103,104] has reported the results of load tests on some specimen of hollow circular and rectangular hollow columns, but these are limited to very small dimensioned sections either unreinforced or having very light reinforcement. So far no published material is available on design of hollow reinforced concrete columns.

Therefore, design curves for hollow rectangular, circular, hexagonal and I/H shaped column sections have been developed. A computer program developed earlier[129] has been modified for hollow column sections for this investigation. Based on practical considerations, certain ranges of the geometrical variables of hollow column sections, such as breadth, depth, diametor, wall thickness, concrete cover to reinforcement, etc. have been adopted for each shape.

The effect of different reinforcement detailing on various shapes of hollow reinforced concrete columns has been investigated to arrive at the optimum reinforcement arrangement for each shape. This will help designers to make the most economical use of reinforcement steel.

Design charts for various geometry of hollow column sections have been obtained by plotting biaxial moments for different values of area of steel and a particular value of axial force. For wider applicability of the design charts, the ultimate axial force P_u, biaxial moments M_{ux} and M_{uy} and area of steel A_s have been expressed in non-dimensional form. Use of the design charts has been illustrated through a number of design examples.

Further investigations have been carried out on simulatory finite element models of hollow rectangular and circular columns using a standard finite element package to study the effect of opening on hollow column sections. As a result of the investigations, the locations, nature and magnitude of stress concentration has been ascertained and remedial measures suggested to counter its effect.

The use of design charts as presented is simple and direct. The study is comprehensive and covers a very wide range of shapes and geometrical parameters, including sections with large openings. It also facilitates the most economical use of reinforcement steel resulting in optimum design.

LIST OF ABBREVIATIONS AND SYMBOLS

A_c = Nett area of concrete in the cross-section

A_g = Gross area of the cross-section

A_s = Total area of steel reinforcement

ACI = American Concrete Institute

B = Least dimension or breadth of the section

B.S. = British Standard

d' = Effective cover to main reinforcement measured from the centre line of reinforcement bars.

D = Greatest dimension or depth of the section

E_s = Modulus of elasticity of steel

f_c = Design stress in concrete corresponding to strain, c

f_{ck} = Characteristic strength of concrete

f_{co} = Design compressive strength of concrete, equal to 0.446 f_{ck}

Fe415 = Grade of steel having characteristic yield strength of 415 N/mm^2

Fe500 = Grade of steel having characteristic yield strength of 500 N/mm^2

Fe550 = Grade of steel having characteristic yield strength of 550 N/mm^2

f_y = Characteristic strength of steel

f_{yd} = Design yield strength of steel

I.S. = Indian Standard.

M_{ux} = Ultimate moment about X-axis

M_{ux}' = $M_{ux}/f_{ck} Z_x$

M_{uy} = Ultimate moment about Y-axis

M_{uy}' = $M_{uy}/f_{ck} Z_y$

p = Percentage of steel reinforcement, equal to $100A_s/A_g$

PC = Steel content equal to p_{fy}/f_{ck}

P_u = Ultimate axial load

P_u' = $P_u/f_{ck}A_g$

PUR = Specified axial load level expressed in non-dimensional form

P_{uz} = Ultimate axial load capacity of a column section.

Ec = Strain at any point of section

Ecb = Strain at the least compressed fibre of concrete

X_u = Depth of neutral axis

Z_x = Section modulus about x-axis based on gross-section

Z_y = Section modulus about y-axis based on gross-section

Z_{yl} = Section modulus about Y-axis based on gross section, at the extreme left edge of Cee shaped sections.

Z_{yr} = Section modulus aboyt Y-axis based on gross section, at the extreme right edge of Cee shaped sections.

C = Width of Opening in Cee shaped column sections.

O = Inclination of neutral axis with respect to reference axis

\ = Diameter (size) of high yield strength deformed reinforcement bar.

LIST OF FIGURES

LIST OF DESIGN CHARTS

Chart No. Description Page No.

CHAPTER 1 : INTRODUCTION

1.1 GENERAL

Colums are important structural element of reinforced concrete framed structures. Reinforced concrete columns can be of various shapes and cross-sections depending upon architectural and structural requirements, such as rectangular, circular, hexagonal, Cee (C), Tee (T), Cross (+) and L-shaped. Most columns have solid core sections. However, modern architects of large public and commercial buildings often adopt "Pylon" type column (i.e. columns having large girth) from aesthetic as well as utility considerations. The pylons are usually kept hollow so that service lines could be run through them.

Large span buildings such as the Indira Gandhi Indoor Stadium at Delhi having suspension type roofing structures also require pylons to sustain lateral loads of high magnitude applied at the top. In such cases it is advisable to adopt hollow rectangular, circular or hexagonal column sections having a large girth, which will result in considerable moment of resistance of the section and hence economical design. As inner space of hollow columns is utlised for running service lines, provision of entry door at floor levels becomes inevitable. At such locations the hollow column section acquires a cee shape due to the large door opening. Fig. 1.1 shows some typical shapes of hollow column sections. Also, the I or H shaped section which is another variation of rectangular cee section, is very efficient under bending moments of high magnitude. A combination of I or H

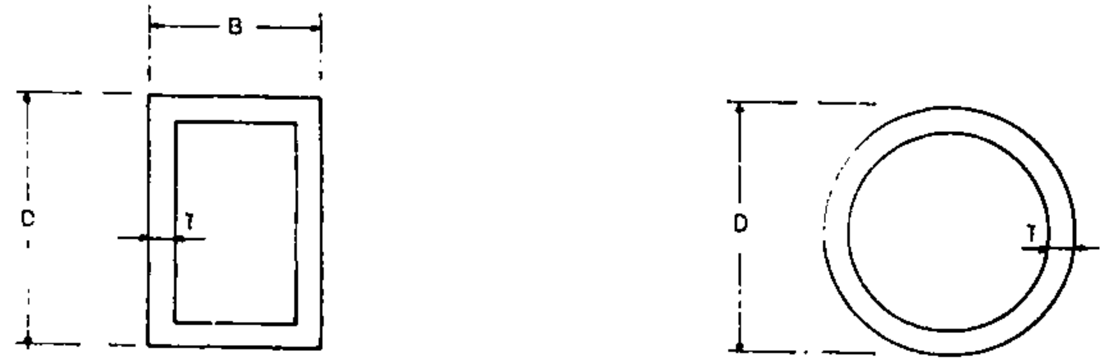

(a) RECTANGULAR (b) CIRCULAR

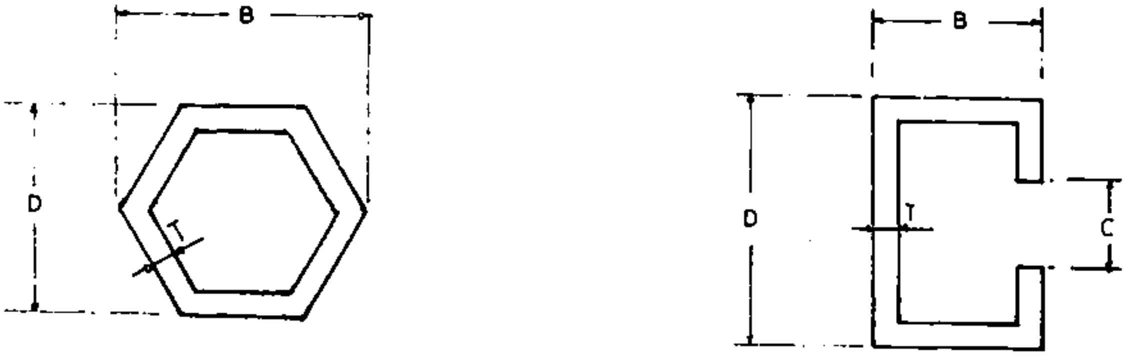

(c) HEXAGONAL (d) RECTANGULAR CEE

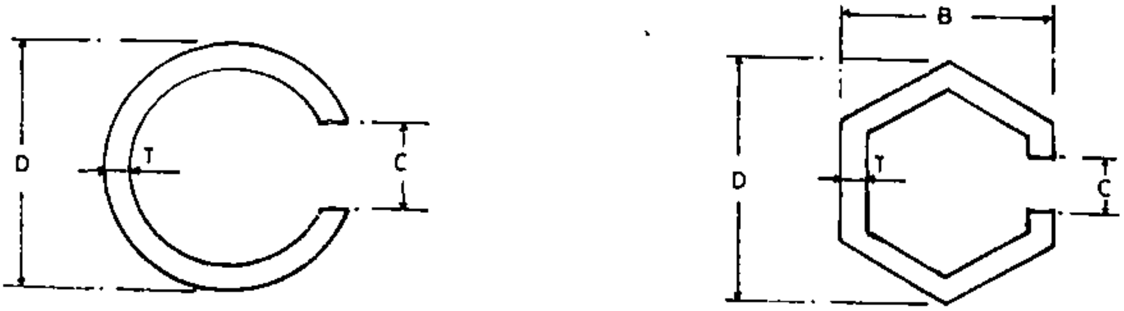

(e) CIRCULAR CEE (f) HEXAGONAL CEE

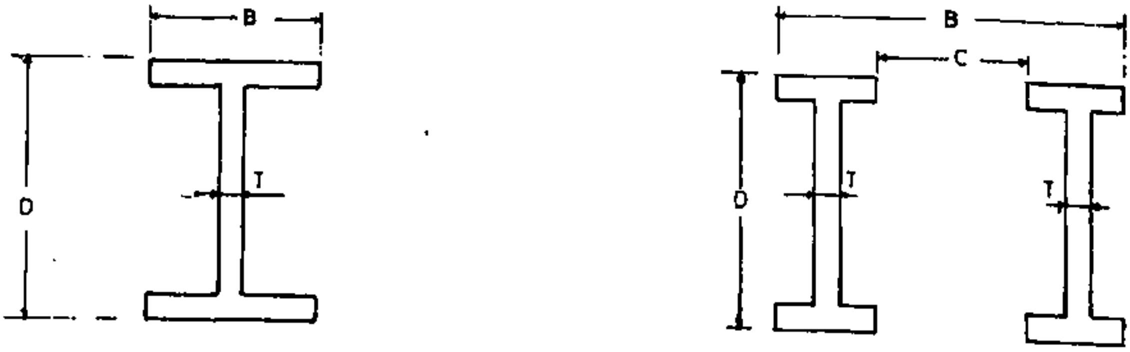

(g) I/H SECTION (h) COMBINATION OF I/H SECTIONS

Fig. 1.1 DIFFERENT SHAPES OF HOLLOW COLUMNS shaped column sections can be effectively used as shear wall in high-rise buildings as illustrated in Fig. 1.1 (h).

The study presented in this thesis aims at developing the interaction curves for design of rectangular, circular and hexagonal shaped hollow reinforced concrete columns without and with a large opening, as well as I/H shaped columns subjected to the combined action of axial comression and biaxial bending, which would be vary useful for the design of large commercial and public utility buildings and structures like chimneys, water towers, shear walls etc.

The design of reinforced concrete columns can be carried out by "Working Stress" or "Limit State" method as stipulated in IS:456-1978[61]. The limit state method predicts the ultimate load capacity more accurately, and is therefore used for design of columns. The design of reinforced concrete column sections subjected to combined action of axial compression and biaxial bending is a complex and cumbersome process. For rectangular and circular solid core sections, interaction curves are available in SP:16[135]. These curves are for axial load and uniaxial moment only, and for biaxial moments, the same curves are used to ascertain the safe load bearing capacity of an assumed section by trial-and-error method. Some researchers[75,78,126,137] have developed computer programs and interaction curves for direct design of rectangular reinforced concrete sections subjected to axial compression and biaxial moments. Significant work has also been done for solid core reinforced concrete column sections having Tee (T), Cross (+) and L shapes[85,92,127,128,130]. However, so far no such work has come to light with respect to hollow rectangular, circular and hexagonal and I/H shaped reinforced concrete columns subjected to axial compression and biaxial moments.

1.2 GEOMETRY OF SECTIONS

Rectangular hollow columns can be of various dimensions and ratios of breadth to depth. Firstly, pylon type columns are not supposed to be of small dimensions due to their very nature of application, and secondaly, there can be various combinations of girth to wall thickness ratios. While from architectural and aesthetic considerations a range of minimum and maximum girth and breadth/depth ratios can be selected for investigation, on considerations of local buckling and practical aspects such as reinforcement placement and shuttering, a most practical range of girth/wall thickners ratios can be arrived at. The same applies to other hollow column sections as well as I/H shaped sections.

Hollow rectangular column sections have three geometrical variables viz. overall depth D, breadth B, and wall thickness T. There can be innumerable combinations of these variables, but from practical, aesthetic and structural considerations a range of combinations can be identified as most appropriate for the study. A minimum value of 1000 mm has been considered for depth D in view of the convinience in formwork, while a maximum value of 4000 mm has been adopted from architectural and structural considerations. The breadth of section B has been expressed in terms of depth to breadth (D/B) ratio. Values of D/B ratio equal to 1.0, 1.5, 2.0, 3.0 and 4.0 have been considered. A minimum value of wall thickness T equal to 100 mm has been adopted from the consideration of reinforcement placement and proper concreting. The maximum value of T is limited to 500 mm, for beyond this value the advantage of using hollow section will cease to accrue. A minimum clear cover of 40 mm for the main reinforcement bars is provided where T is more than 200 mm. For T less than or equal to 200 mm a minimum clear cover of 25 mm for the main reinforcement bars has been asumed. The width of opening C for cee shaped sections is normally 1000 mm, but for smaller values of D it has been limited to 600 mm. Detailed geometrical parameters have been tabled in Chapters 4, 5 and 6.

1.3 COMPUTATIONAL METHOD

Development of interaction curves for a column section having a particular geometry and reinforcement arrangement requires computation of sets of values of biaxial moment capacities for the chosen value of axial force. These can be obtained by assuming the inclination and position of neutral axis and then computing the axial force and moments. The axial force and moments are computed by a numerical approach where the compression zone is split into a number of equal width strips parellel to the neutral axis. The force and moments due to the force in each strip are calculated about two orthogonal axes passing through the centroid of the section. Forces and moments due to reinforcement in the section are also calculated and the total axial force and moments in the section are obtained by summing up the axial forces and moments due to concrete strips and reinforcement bars. The calculation of forces are based on the failure of concrete governed by the maximum strain criteria and idealised stress-strain curves of concrete and steel in accordance with Indian Code of Practice, IS:456-1978. A computer program developed earlier[129] has been modified for hollow column sections for this investigation. Specially written subroutines are able to generate the geometrical parameters of various types of column sections with minimal manual data input. The force and moments computed as above are compared with the chosen values of axial force and moments for compatibility within permissible limits. If not, then the position of neutral axis is shifted till the internal forces compare with the external applied forces within permissible limit. Next, the inclination of the neutral axis is varied to get a new set of values of moment capacities. In this manner the entire range of values of inclination of neutral axis can be considered depending on the symmetry of the section. The sets of values when plotted gives the interaction curves for that particular type of section.

1.4 OPTMIZATION OF REINFORCEMENT DISTRIBUTION

An important aspect of the investigations is establishment of the optimum reinforcement detailing for hollow column sections of different shapes and parameters. It has been seen that with a given amount of steel, one can achieve maximum load capacity just by judiciously manipulating the placement of reinforcement bars at strategic locations inside the section. In order to find the optimum reinforcement arrangement for a particular hollow column section, its interaction curves are plotted for a fixed percentage of steel and axial load, but varying reinforcement arrangement. In general, the interaction curves covering maximum area on the graph may be considered to represent the optimum reinforcement detailing for that particular column section. Detailed descriptions of the optimization process appear in Chapters 3, 4 and 5.

Based on the above investigation, comprehensive guidelines have been drafted for optimum reinforcement detailing of various types of hollow column sections.

1.5 EFFECT OF OPENING

Further investigations have been carried out on simulatory finite element models of hollow rectangular and circular columns using a standard finite element package to study the effect of opening on hollow column sections. Before proceeding with the study, finite element models of various sizes having varying number of elements have been tried to arrive at the converging model which gives fairly accurate results and at the same time is feasible and economical on computer hardware and time. Extensive finite element analysis of the model revealed stress concentration around the opening necessiating extra reinforcement. Inferences have been drawn and remedial measures suggested to counter the effects of stress concentration around openings.

1.6 DESIGN CHARTS

The design chart consists of a set of interaction curves pertaining to a particular type of column section covering the entire range of practically possible values of axial load and reinforcement percentage. Design charts for various geometry of hollow column sections have been obtained by plotting biaxial moments for different values of area of steel and a particular value of axial force. For wider applicability of the design charts, the ultimate axial force P_u, biaxial moments M_{ux} and M_{uy} and area of steel A_s have been expressed in non-dimensional form as $P_u/f_{ck} A_g$, $M_{ux}/f_{ck} Z_x$, $M_{uy}/f_{ck} Z_y$ and $100\ A_s\ f_y/f_{ck}\ A_g$ respectively,

where A_s = Area of steel

A_g = Gross area of section

f_{ck} = Characteristic strength of concrete

f_y = Characteristic strength of steel

Z_x = Modulus of section about X-X axis

Z_y = Modulus of section about Y-Y axis

For closed hollow column sections symmetrical about both orthogonal axes, interaction curves for four levels of axial load corresponding to $P_u/f_{ck} A_g$ equal to 0.25, 0.5, 0.75 and 1.0 have been included in one chart. Each set of design charts contains interaction curves for percentage of steel varying from 0.15 to 6.0 in increments of 0.5 percent.

For cee shaped column sections i.e. hollow columns with large opening which are symmetrical about only one axis, interaction curves for only two levels of axial loading have been included in one chart as the interaction curves corresponding to positive and negative values of Muy are different on account of asymmetry about the Y-Y axis. Design charts have been presented in Appendices A1, A2 and A3.

In order to ensure accuracy and to avoid any chance of human error, the design charts can be plotted through computer using a standard CAD package, by making direct access to the program output file.

1.7 CONCLUSIONS

Hollow reinforced concrete columns have wide applications in structural engineering. Apart from aesthetic look and functional advantage, hollow columns are economical under bending moments of high order. The use of design charts presented is simple and direct. The study is comprehensive in the sense that it cover a very wide range of shapes and geometrical parameters, including sections with large openings. It also facilitates the most economical use of reinforcement steel resulting in optimum design.

CHAPTER 2 :REVIEW OF LITERATURE

2.1 GENERAL

Columns, the primary load carrying member in a structural framework have been classified into three categories viz. very short, short and slender. Columns having slenderness (effective length to corresponding lateral dimension, l/d) ratio less than or equal to 3 are called very short Columns or pedestals. Similarly columns of intermediate slenderness (3<l/d<12) are called Short columns, whereas those with slenderness ratio higher than 12 are termed slender columns as recommended by IS:456-78[61].

Pedestals are normally not critical in strength as their cross-sectional dimensions are large as mainly governed by practical considerations, Pedestals are provided with nominal reinfoorcement governed by codal provisions. The study of the strength of reinforced concrete column sections is mainly concerned with the study of short columns. The design principles of short columns are in-turn applied to slender columns after adding the effect of slenderness into the applied forces, as established by researchers and recommended by various codes.

Extensive literature is available on interaction curves for rectangular and circular columns, while very limited studies are available on other shapes such as L, T, C and + shapes of column sections. Research work on interaction curves for hollow reinforced concrete columns has not come to light so far.

Rivew of literature on classical elastic theory, experimental investigations, limit state method and interaction surface approach for the design of reinforced concrete columns has been done in the following paragraphs.

2.2 THE CLASSICAL ELASTIC THEORY

The classical elastic theory is based on compatibility of strain and stress in the reinforcement equal to modular ratio (m=Es/Ec) times the stress in the surrounding concrete. This approach has been found to be very conservative due to the creep and shrinkage behaviour of concrete. Even in the case of a hypothetically unloaded concrete column, shrinkage effects are capable of generating self - equilibriating stresses. Moreover, the inherent compressive strength of concrete is rather difficult to measure in the laboratory as it is a function of specimen size, height of specimen etc. If the cylinder strength of concrete is Fc, tests have revealed that only 0.85 Fc can be realised in the full scale column tests. As a result the strength of a reinforced concrete column came to be looked upon as consisting of the strength of steel and the strength of concrete. It is thus obvious that the strain compatibility equation has now become redundant in case of axially loaded reinforced concrete columns.

2.3 EXPERIMENTAL INVESTIGATIONS

The behaviour of axially and eccentrically loaded reinforced concrete columns has been understood properly on the basis of a series of tests undertaken at several research laboratories of the world. The most significant studies amongst them are by

Slater[132], Richart[112-115], Honestad[58] and Mattock[86,87]. The outcome of the laboratory tests forms the basis of the theory for establishing the strength of reinforced concrete sections. These are:

(a) The strain compatibility at working load does not hold good.

(b) Enormous ductility could be built into reinforced concrete columns by the use of spiral type lateral reinforcement.

(c) The efficiency of spirals in carrying axial loads was rated as twice that of the corresponding longitudinal steel.

(d) Tied columns fail suddenly and catastrophically, while spirally reinforced columns fail gradually in a ductile manner. Therefore the concept of limit state design is heavily biased in favour of spiral reinforcement.

(e) The plane section hypothesis has been found to be valid in case of eccentrically loaded columns, even in the ultimate stage of behaviour. Based on moment and force equilibrium requirements and the plane section hypothesis, problems of eccentrically loaded columns can be solved to yield results that agree with the laboratory tests[86].

(f) The criteria for failure of concrete columns is limiting strain, and axially loaded columns are deemed to have failed if the axial strain reaches a limit of 0.002.

(g) When moments predominate, as in the case of top storey columns of a multistoreyed building, the maximum compressive strain in concrete reaches a value of 0.0035 or so which is the same as that observed in the case of beams. The failure criteria in terms of strain thus becomes a variable, changing from 0.002 for axially loadad columns to 0.0035 in case of large eccentricities.

(h) As in the case of flexure, the exact nature of the concrete stress block in compression zone of a column does not seem to be important. So long as the total compression and the location of its resultant can be identified reasonably accurately, any stress block seems to yield results that compare favourably with test results.

(j) Load carrying capacity of columns with eccentric loads does not decrease as rapidly with increasing eccentricity as would be predicted by the elastic theory. Thus on a conservative basis, an interaction formula of the following form can be used:

$$\frac{f_a}{F_a} + \frac{f_b}{F_b} < 1$$

Where f_a = Axial unit stress

F_a = Allowable axial unit stress

f_b = Bending unit stress

F_b = Allowable bending unit stress

2.4 LIMIT STATE METHOD OF DESIGN

Strength of reinforced concrete columns under axial load biaxial moments can be computed numerically based on codal provisions with regard to limits of strain in concrete and steel reinforcement. However, the methods of design enumerated earlier and available to the designer today in the form of IS:456-78[61] and SP-16[135] can at best be termed as approximate. With the advent of computers, particularly the desk top machines, a strong urge was felt for a rigorous or exact approach within the accepted design assumptions.

The basic assumptions as put forth in IS:456-78[61] and other international codes such BS:8110-1985[3,111], CEB-FIP Model Code[23] and the ACI Code[4-7] are the same and are listed below :

(a) Sections remain plane after deformation.

(b) The reinforcement is subjected to the same variations in strain as the adjacent concrete.

(c) The tensile strength of concrete is neglected.

(d) The maximum compressive strain of concrete is taken to be 0.0035 in bending (simple or compound, straight or skew) and 0.002 in axial compression.

(e) The maximum tensile strain in reinforcement at failure is taken to be $f_y/1.15\,E_s$

where f_y = characteristic strength of steel.

E_s = modulus of elasticity of steel.

(f) The concrete stress-strain relationship in assumed to be a parabola - rectangle.

Marin[78] was undoubtedly the first researcher to have come out with a computer program called REVCOL as back as in 1970. This program was initially supposed to be capable of analysing and checking any imaginable reinforced concrete cross-section in its ultimate strength state. However, when applied to L and C sections, the program exhibited extraordinary complications. Subsequently Marin[85] developed another program specially for L -shaped sections in 1979. Magalhaes[75] has also presented a computational method generally applicable to column sections of any shape. He has considered two types of steel reinforcement viz. hot rolled steel having a "Sharp Kneel" stress-strain diagram and cold worked steel without a well defined yield point. Though the concrete section and reinforcement may have any form and definition, the theory is developed particularly for sections defined by coordinates of the vertices of the outline polygon while the reinforcement consists of bars with the area concentrated at points. The formula for the calculation of mechanical characteristics of polygonal sections (static moments of the first, second and third order) are laid down and can be used in the calculation of sections of any material. The determination of the defining parameters of the neutral axis, on the basis of the equilibrium equations, is carried out by application of Newton-Raphson method. Magalhaes[75] has also indicated in his paper the application of this method to hollow concrete sections.

Sturrock[137] has presented a method for computer analysis of reinforced concrete sections under axial load and biaxial bending. The basic approach calculates the ultimate moment of resistance with respect to the reference axes for a defined axial load. The method is capable of dealing with any shape of cross- section and is suitable for programming on a desk top computer. For the assumed position of neutral axis the equilibrium of forces on the cross - section is checked and the neutral axis position is adjusted as necessary until equilibrium is established. The axial force and moments are calculated by numerical approach where the compression zone is split into a number of equal width strips parallel to the neutral axis. The length of each strip and the strain at its centroid are determined, and thus the force in each strip as well as the resulting moment about the neutral axis are calculated and summed. Similarly, the force and moments due to each reinforcement bar are also calculated and summed. Sturrock's method has worldwide acceptance and subsequent works by researchers are based on it.

As discussed earlier, due to the large number of variables involved, it is practically impossible to produce a universal program or set of interaction curves applicable to all possible shapes, sizes, characteristic strengths and reinforcement distributions. As such, researchers, after carrying out extensive computations based on the assumptions and methods established by the earlier researchers[75,78,83,137] have come out with easy to use interection curves meant exclusively for different cross-sections such as rectangular, circular, L, T, C and + shaped. Very significant work has been done by Sinha[126-130] and his associates for the development of interaction curves for special shapes of columns like +[127] and T[128], subjected to biaxially eccentric loads. Recently Sinha has proposed user friendly charts for the "Direct Method of Design of Rectangular Column Section" which is simple and of immennse use to the designers. He has first recommended the most economical reinforcement distribution for various B/D ratios and then goes on to produce interaction curves for direct reading of reinforcement percentage against the applied axial load and biaxial moments for the various B/D ratios and reinforcement arrangements. Fig. 2.10 showns a typical interaction curve. Here the applied forces P_u, M_{ux} and M_{uy} are first converted into non-dimensional integers by applying the appropriate strength characteristics of concrete and steel reinforcement and then the designer follows the procedure indicated by dotted lines a-b-c-d to read the reinforcement percentage directly.

2.5 INTERACTION CURVES FOR DESIGN OF COLUMN SECTIONS

It is clearly seen that the direct approach for finding the strength of eccentrically loaded reinforced concrete column is cumbersome, and its best the results are bound to be approximate. inasmuchas most columns are biaxiaaly eccentrically loaded, the designers are bound to take considerable time in analysing and designing such columns. The obvious question at this stage of development is whether design aids, such as tables, charts and nomograms can be made available to hasten the design process.

2.5.1 UNIAXIAL BENDING

Based on a set of assumptions coroborated by laboratory test results, and a set of specified partial safety factors, the ultimate strength of uniaxially eccentrically loaded columns can be derived. To overcome the drudgery of cumbersome calculations, interaction curves have been developed by plotting axial load against uniaxial bending moment expressed in non-dimensional form for various shapes of column section and reinforcement arrangements. Figures 2.1 and 2.2 show typical interaction curves (P-M diagrams) for a rectangular section under uniaxial bending. It stands to reason that such interaction curves can be drawn for various planes of bending assuming various positions of neutral axis.

2.5.2 BIAXIAL BENDING

In the case of biaxial eccentricity we get interaction or failure surfaces. Each point on this surface represents one particular set of axial load P_u, moment M_{ux} about the major axis and M_{uy} about the minor axis, which will combine to produce failure. If a horizontal section is drawn through the interaction surface, the interaction curve so obtained represents possible combinations of M_{ux} and M_{uy} that would cause failure at a given axial load P_u. This curve is obviously a constant load contour.

If tha reinforced concrete cross-section is square, in shape and symmetrically reinforced, one would expect this contour to be a circle, and in case of a rectangular section, an allipse. But

Pannel[96] has shown by detailed analysis that this is not the case. The problem becomes more intricate if the cross-section is unsymmetrical about one or both axes.

2.6 CODAL APPROACH FOR DESIGN OF COLUMN SECTIONS

2.6.1 AMERICAN CODE METHOD OF DESIGN

For a given cross-section of width b, depth h and reinforcement percentage $p = (A_s + A_{s'})/bh$, typical interaction curves obtained by plotting $P_n/f'_c bh$ versus $P_n e/f'_c bh^2$ are shown in Fig. 2.1 (a). For a given value of mh, which represents the distance between compression and tension reinforcement (of approximately equal quantities) a set of design curves are given in the same chart. Several charts are available for mh varying from 0.6 to 0.95. The minimum eccentricity line e/h = 0.05 and the balanced eccentricity line eb/h are also shown. Winter and Nilson[150] have illustrated the use of these curves. Since it is simpler to deal with dimensional variables to have a proper understanding of the influence of various design parameters, let P_{no} be the pure axial load capacity and let M_{no} be the pure flexural capacity of a given cross-section as shown in Fig. 2.1(b). Let Oa represent the M_n/P_n line and let Ob represent the M_{nb}/P_{nb} line. The line ab represents compression failure, line bc represents tension failure and point b identifies the balanced failure condition. These lines are constructed by assuming various strain profiles as indicated by the CEB-FIP model codes[23]. Since $\phi = 0.70$ or 0.75 is a capacity reduction factor, a different line EABF is constructed by taking $OA = \phi$ (oa) and by similar proportioning of

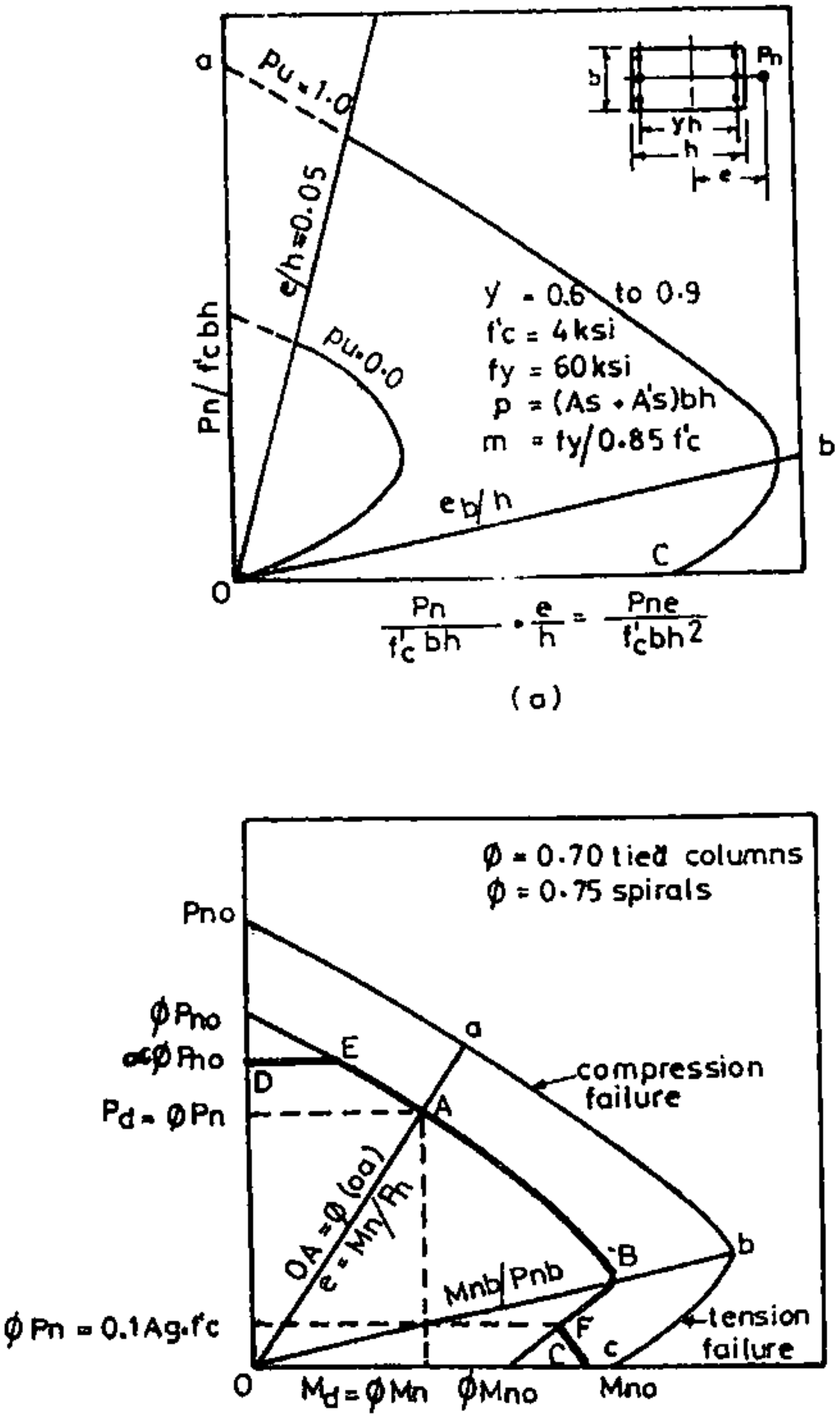

(a)

(b)

FIG. 2.1 ACI CODE APPROACH FOR P-M INTERACTION DIAGRAMS:
(a) NON-DIMENSIONAL P-M INTERACTION CURVE (ACI);
(b) DESIGN VALUES FROM INTERACTION DIAGRAM, DEAFC

$OB = \phi(ob)$, $OC = \phi(cc)$, ect. Hence design should be based on the modified interaction curve EABFC. A typical point A represents $Pd = \phi.Pn$ and $Md = \phi.Mn$. Modifications are required for small eccentricities and very large eccentricities. In the case of very large eccentricities, flexure predominates and the capacity reduction factor of 0.90 ($\phi = 0.90$) should be used. It is obvious that some kind of transition between $\phi = 0.70$ or 0.75 and $\phi = 0.90$ should be worked out. The ACI Code stipulates for $Pd = 0.10\, f'_c.A_g$ and $Pd = \phi$, the value of ϕ may be increased linearly from 0.70 or 0.75 to $\phi = 0.90$ as shown by line FC. In the case of small eccentricities, wherein compression predominates across the entire cross-section, the code lays down that $Pd = 0.800\, P_{no}$ for tied columns and $Pd = 0.85\, P_{no}$ for spirally reinforced columns be adopted. Hence line DE represents such a horizontal cut-off. In these computations $P_{no} = 0.85\, f'_c bh + A_{s'} f_y + A_s f_y = 0.85\, f'_c A_c + A_{st} f_y$. The parameter pm is of interest since it represents

$$\frac{(A_s + A_{s'})}{bh} \times \frac{f_y}{0.85 f'_c}$$

and the same set of curves are valid for various quantities of steel and concrete and the ratios of their strengths.

2.6.2 INDIAN CODE METHOD OF DESIGN

A typical P-M interaction curve as given in SP-16[135], Design Aids for Reinforced Concrete to IS:456-78[61] is shown in Fig. 2.2. It is seen that these curves have the same general form as the ACI curves but the various curves are generatrd for the parameter

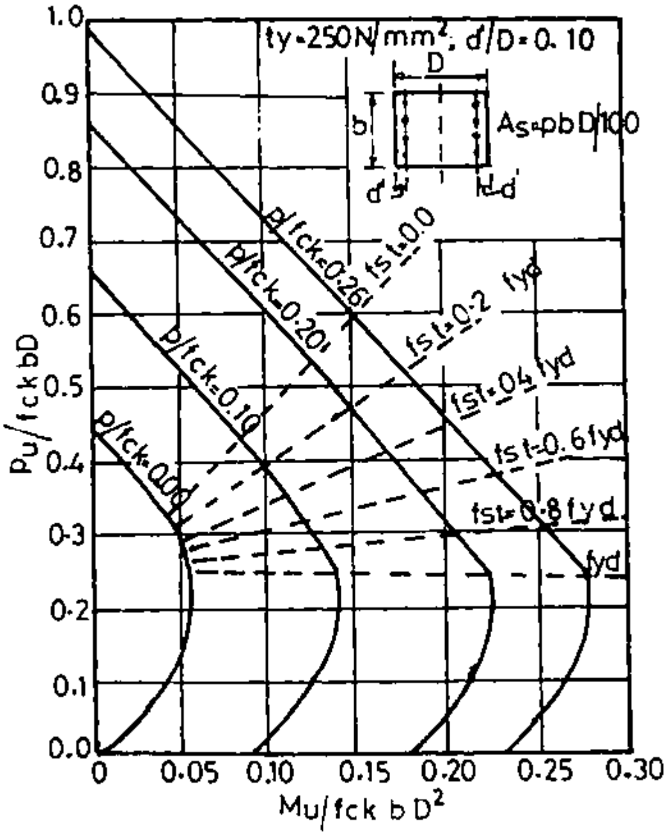

FIG. 2-2 I.S. CODE APPROACH TO P-M INTERACTION DIAGRAM

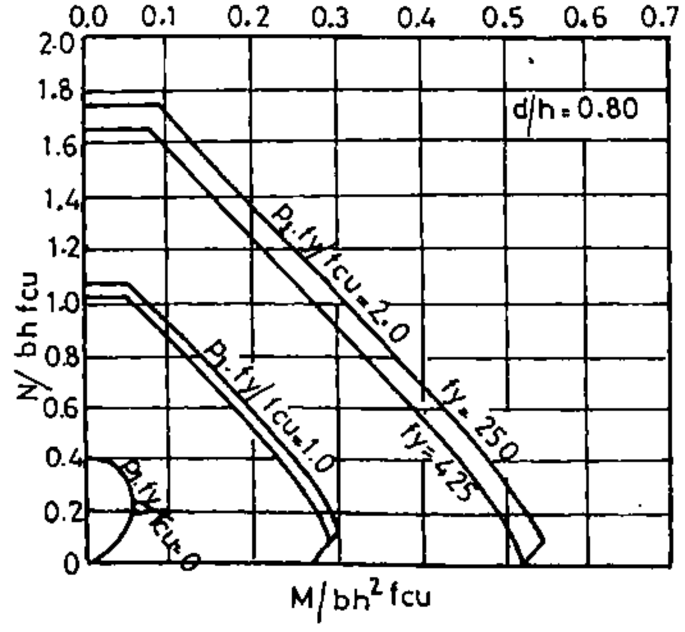

FIG. 2-3 B.S. CODE APPROACH—RIGOROUS ANALYSIS

P/f_{ck} rather than pf_y/f_{ck}, and hence different sets of curves are required for different values of f_y. Furthermore, the lines $fa = 0.0, 0.2, 0.4, 0.6, 0.8$, and $1.00 f_y d$ represent the state of stresses in steel in the least compressed edge. The tension failure line is obviously easy to identify. The e/h concept has been de-emphasised and the state of stress in steel has been given importance.

2.6.3 BRITISH CODE METHOD OF DESIGN

British code BS:8110[30] lays down the parameters of design of RC columns. The axial load of a short column without significant moments is given by

$$N = 0.40 f_{cu} A_c + 0.67 f_y A_{sc}$$

For a nominal eccentricity of h/20 in the case of unbraced columns, the following expression gives the ultimate load N.

$$\frac{N}{bh} = \frac{K_1 (d/h - K_2) + f_y d_1 . p_1 (d/h - 1/2)}{(d/h - 9/20)}$$

where K_1, K_2, and K_3 are as indicated in Fig. 2.5

$f_y d_1$ and $f_y d_2$ are design stresses in compression and tension reinforcements respectivelly

$p_1 = A_{sc}/A_c$ is the proportion of reinforcement.

In the case of columns subjected to axial load and bending moment, the use of the parabolic-rectangular stress block results in the following equations for rectangular columns:

$$N = K_1 x.b + A_{s'1} f_y d_1 - A_{s1} . f_y d_2$$

$$M = K_1.x.b(h/2-K_2.x) + A_{s'1}.f_{yd1}(h/2-d') + A_{s2}.f_{yd2}(d-h/2)$$

where $K_1 = 0.445f_{cu} - 0.00838(f_{cu})^{3/2}$

$$K_2 = \frac{1876-70.73(f_{cu})^{1/2} + f_{cu}}{3752 - 70.73(f_{cu})^{1/2}}$$

$$K_3 = 0.0566(f_{cu})^{1/2}$$

f_{yd1} and f_{yd2} are the appropriate values of f_y for compression reinforcement A_{s1} and tension reinforcement A_{s2} to be used for design purpose, and depend on the corresponding value of x/h. (For example, $f_{yd2} = 0.87f_y$ when $x/d < 805x(1265+f_y)$. When $x > d$, the reinforcement A_{s2} is in compression. The value of f_{yd2} should be taken as negative in the foregoing expressions for M and N. The design chart shown in Fig. 2.3 is based on the above formulae.

On the other hand, BS-8110 permits a simplified approach, which is of interest to the designers using IS:456-78. The curves shown in fig.2.4 are based on this simplified approach. The following procedure has been adopted in the simplified approach.

$$N = (2/5)f_{cu}.d_c.b + 0.72A_{s1}f_y - A_{s2}f_{s2}$$

$$M = (1/5)f_{cu}.d_c b(h-d_c) + 0.72f_y.A_{s'1}(h/2-d')+A_{s2}.f_{s2}(d-h/2)$$

where $d_c < 2d'$ is the depth of concrete assumed to be in compression and f_{s2} is the stress in the tension reinforcement. The code recommends that when $2d' < d_c < h/2$, $f_{s2} = +0.87f_y$; when $h/2 < d_c < d$, f_{s2} varies linearly from $0.87f_y$ to zero;

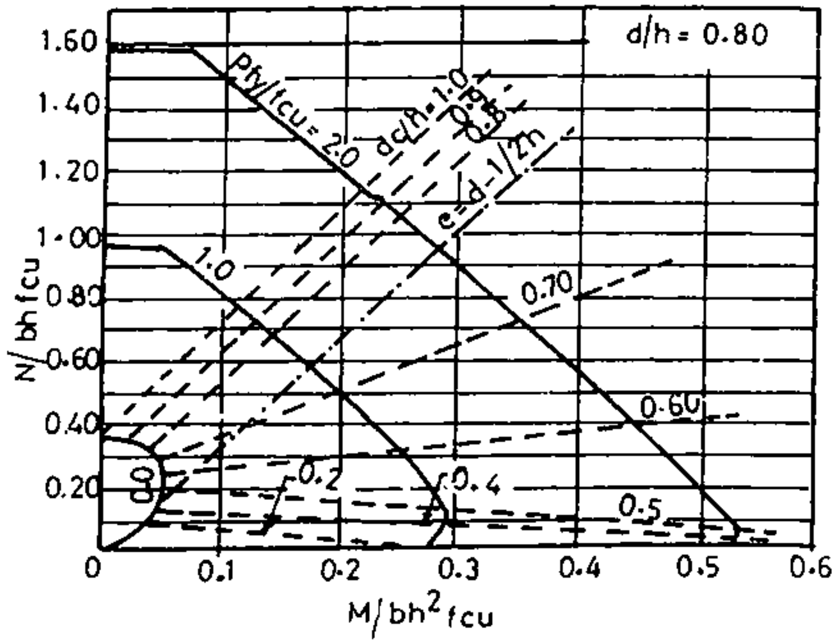

FIG.2.4 SIMPLIFIED B.S:8110 APPROACH FOR P-M CURVES

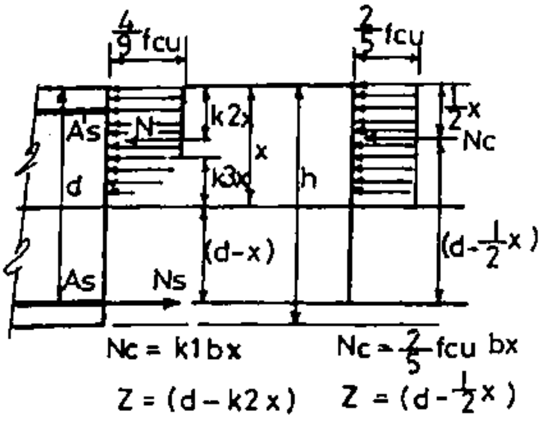

FIG.2.5 BRITISH CODE APPROXIMATION TO STRESS BLOCKS.

when $d < d_c < h$, $f_{s2} = 0$; and when $d_c = h$, f_{s2} increases from zero to $-0.72f_y$.

It is also indicated that nominal reinforcement will suffice when

$$N = (2/5)f_{cu}.b(h - 2M/N) \text{ provided that } M < (h/2 - d')N$$

The foregoing expressions which are obtained by considering a rectangular stress block having a uniform stress of $2/5f_{cu}$ and equating moments about the centreline of the section and direct forces, can be rearranged to give

$$\frac{N}{bhf_{cu}} = \frac{2}{5}\,\frac{d_c}{h} + 0.72\,\frac{f_y}{f_{cu}}\,.\,pc - \frac{f_{s2}}{f_{cu}}\,.pt$$

$$\frac{M}{bhf_{cu}} = \frac{1}{5}\,\frac{d_c}{h}\left(1 - \frac{d_c}{h}\right) + 0.72\,\frac{f_y}{f_{cu}}\,pc\left(\frac{1}{2} - \frac{d'}{h}\right) + \frac{f_{s2}}{f_{cu}}\,pt\left(\frac{d}{h} - \frac{1}{2}\right)$$

and nominal reinforcement will suffice when

$$\frac{M}{bhf_{cu}} = \frac{N}{bhf_{cu}}\left(\frac{1}{2} - \frac{5}{4}\,\frac{N}{bhf_{cu}}\right) \text{provided } \frac{M}{bhf_{cu}} < \left(\frac{1}{2} - \frac{d'}{h}\right)\frac{N}{bhf_{cu}}$$

The above approaches for generating P-M interaction curves have been presented for the use of designers who will be required to generate such curves for T - shaped and I - shaped columns.

2.6.4 INTERACTION SURFACE FOR BIAXIAL BENDING

The design of columns subjected to axial load and uniaxial bending has been simplified by the availability of P-M diagrams or interaction curves as explained earlier. But in practical design situations, columns are invariably acted upon by biaxial bending moments, which makes the problem extremely complex.

In case of biaxial eccentricity we get interaction surfaces instead of interaction curves. Each point in this surface represents one particular set of axial load P_u, moment M_{ux} about the major axis and moment M_{uy} about the minor axis, which will combine to produce failure. Fig. 2.6 (a) shows a typical P-M interaction surface for a reinforced concrete column. It may be noticed that the interaction surface takes the shape of an "onion", since the effect of cracking is to reduce moment capacity of column sections significantly. If a horizontal section is taken through the interaction surface as shown in Fig. 2.6 (b), the interaction curve so obtained represents possible combinations of Mux and Muy that would cause failure at a given axial load Pu. These curves have been called "Isoloads" by Marin[85].

Though attempts have been made by several researchers namely Pannel[96,97], Bresler[20,21], Furlong[46,48], Ramamurthy[107], Parme[99], Meek[88] and Weber[148] to pursue this line of attack, a generalised expression for contours at verious levels of axial load on a reinforced concrete column which bends biaxially cannot be easily derived. This is because the shape of the contour depends upon the geometry, strength of concrete and steel used, arrangement and quantity of steel near the periphery, and also the level of axial load.

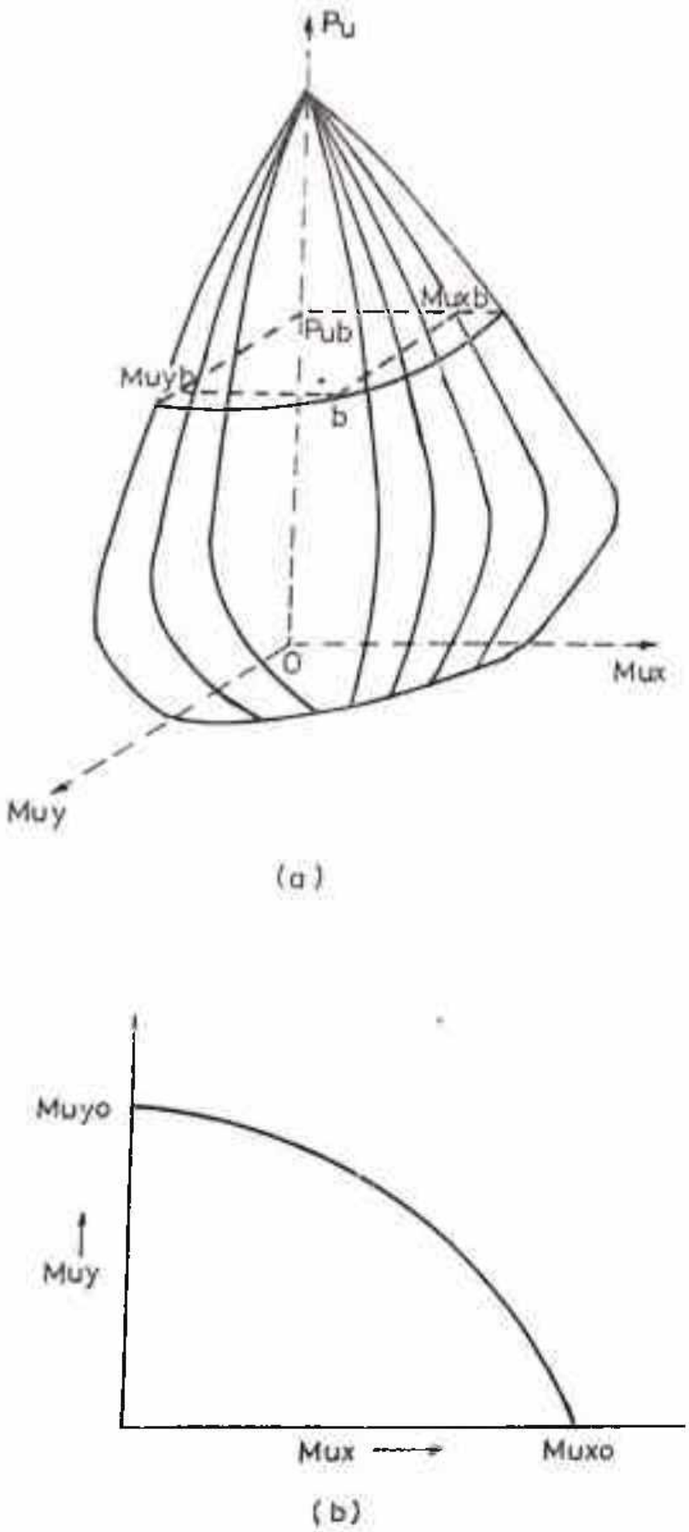

FIG. 2.6 (a) P–M INTERACTION SURFACE.
(b) BIAXIAL MOMENT INTERACTION CURVE AT CONSTANT LOAD.

Bresler's theory is of special interest as it has been adopted by IS:456-78. He has suggested two methods.

Bresler's Method - I

For a given reinforced concrete section, Bresler[20,21] plotted the values of the inverse of ultimate load $(1/P_u)$ against eccentricities ex and ey along various inclinations of the neutral axis to get a bowl-shaped interaction surface as shown in Fig. 2.7(a). Since the equation of such a surface is not readily obtained, it is replaced by a plane in the region of interest. In Fig. 2.7(b) the load versus eccentricity curve in the region of interest at point Q in approximated by a plane passing through points A, B and C. Now point Q on the interaction surface is approximated by point q which generally gives a conservative estimate of the strength of the section. Points A and B represent the reciprocal of ultimate load when acting at eccentricities ex and ey respectively and point C represents the reciprocal of concentric ultimate load capacity. Based on the above approximation, the strength of biaxially loaded column section is given by

$$\frac{1}{P_{uxy}} = \frac{1}{P_{ux}} + \frac{1}{P_{uy}} - \frac{1}{P_{uz}}$$

where P_{uxy} = Ultimate Load under biaxial eccentricities ex and ey.

P_{ux} = Ultimate Load under biaxial eccentricity ex.

P_{uy} = Ultimate Load under biaxial eccentricity ey.

P_{uz} = Ultimate Concentric load.

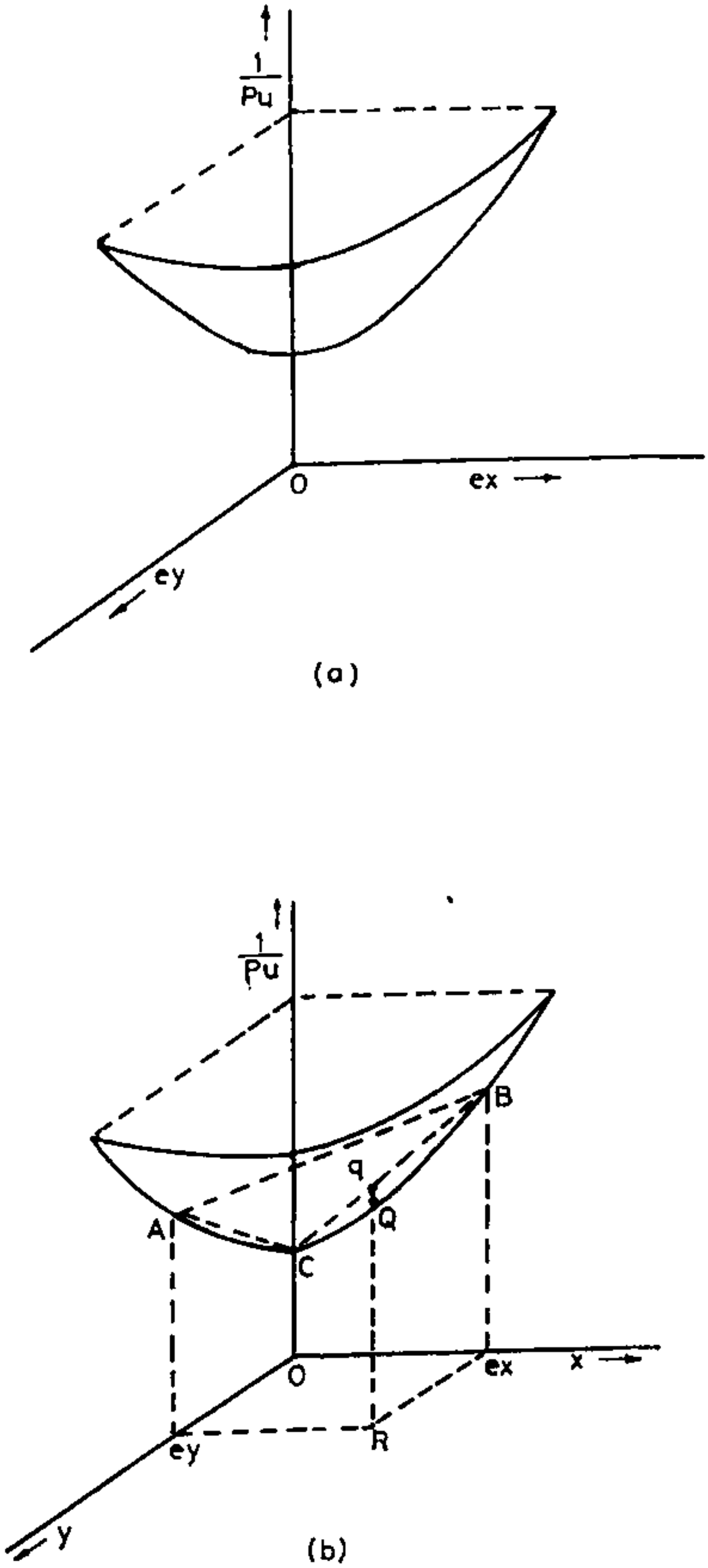

FIG. 2.7 (a) $\frac{1}{P_u}$ – e INTERACTION SURFACE.

(b) $\frac{1}{P_u}$ – e INTERACTION SURFACE IDEALISATION FOR COLUMN SECTION DESIGN.

The above equation for determining the ultimate load capacity is simple and accurate enough with a maximum error of approximately [illegible] percent.

Bresler's Method - II

In the second method Bresler has utilised the P-M Interaction Surface and Isoload as shown in Fig. 2.6(a) and 2.6(b) respectively. Such isoloads or interaction lines can be generalised in terms of dimensionless relative parameters such as M_{ux}/M_{uxo} and M_{uy}/M_{uyo} as suggested by Parme[99], and approximated by the equation

$$[M_{ux}/M_{uxo}]^m + [M_{uy}/M_{uyo}]^n = 1$$

where M_{ux}, M_{uy} = Biaxial moments $P_u.e_y$ and $P_u.e_x$ respectively where e_x and e_y are eccentricities of axial load P_u.

m, n = Exponents that define the shape of the isoload. These exponents depend upon the intensity of axial load, dimensions of the cross-section, amount of reinforcement and its distribution, concrete and steel strengths and the cover to main reinforcement bars.

The isoload as defined by the above equation and plotted in Fig. 2.8(a) can be considered symmetrical about the vertical line bisecting the two ordinate planes and can be expressed as

$$[M_{ux}/M_{uxo}]^{an} + [M_{uy}/M_{uyo}]^{an} = 1$$

where $an = \log 0.5/\log \beta$

and β = Ordinate of the intersection lines at the point at which relative moments are equal.

The above interaction equation has been plotted in Fig. 2.8(b) for different values of ß. The minimum value of ß equal to 0.5 represents a straight line and the maximum value equal to 1.0 represents two lines each of which is parallel to one of the coordinate axes. The value of ß depends on a large number of design parameters such as cross - sectional dimensions, amount of reinforcement and its placement, strengths of concrete and steel and the cover to main reinforcement.

IS:456-78 has considered a single important parameter P_u/P_{uz} that governs the value of an and in given by,

an = varies linearly from 1.0 to 2.0 for the values of P_u/P_{uz} varying from 0.2 to 0.8

= 1.0 for P_u/P_{uz} less than 0.2

= 2.0 for P_u/P_{uz} greater than 0.8

The design of a section is further simplified by plotting interaction curves for different values of P_u/P_{uz} in lieu of an as shown in Fig. 2.9. The use of this curve for design of a section subjected to axial load P_u and biaxial bending moments M_{ux} and M_{uy} is simple, as described below :

(i) Assume the cross-sectional dimensions and area of reinforcement and its distribution.

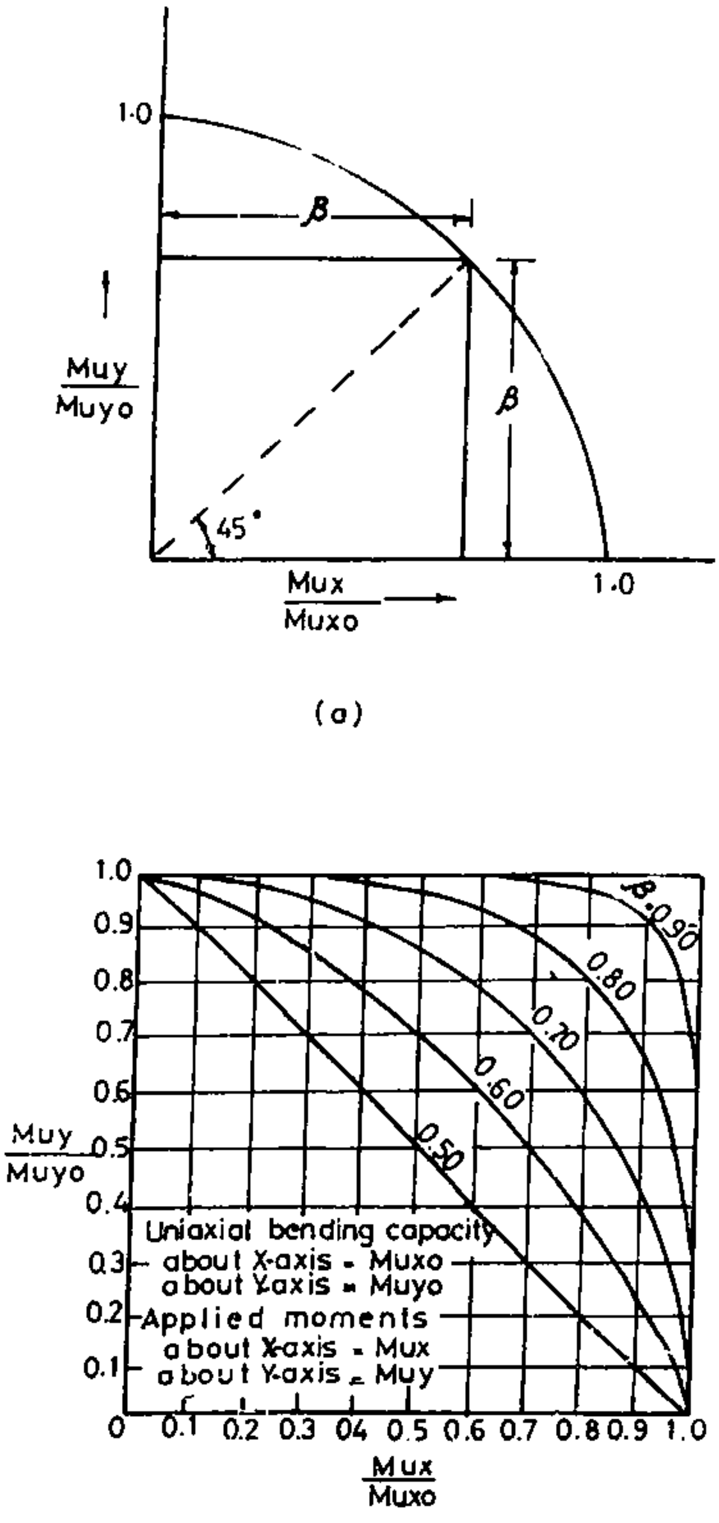

FIG. 2.8 (a) NON-DIMENSIONAL BIAXIAL MOMENTS INTERACTION CURVE AT CONSTANT LOAD (ISOLOAD)
(b) INTERACTION CURVES FOR BIAXIAL MOMENTS FOR DIFFERENT VALUES FOR β.

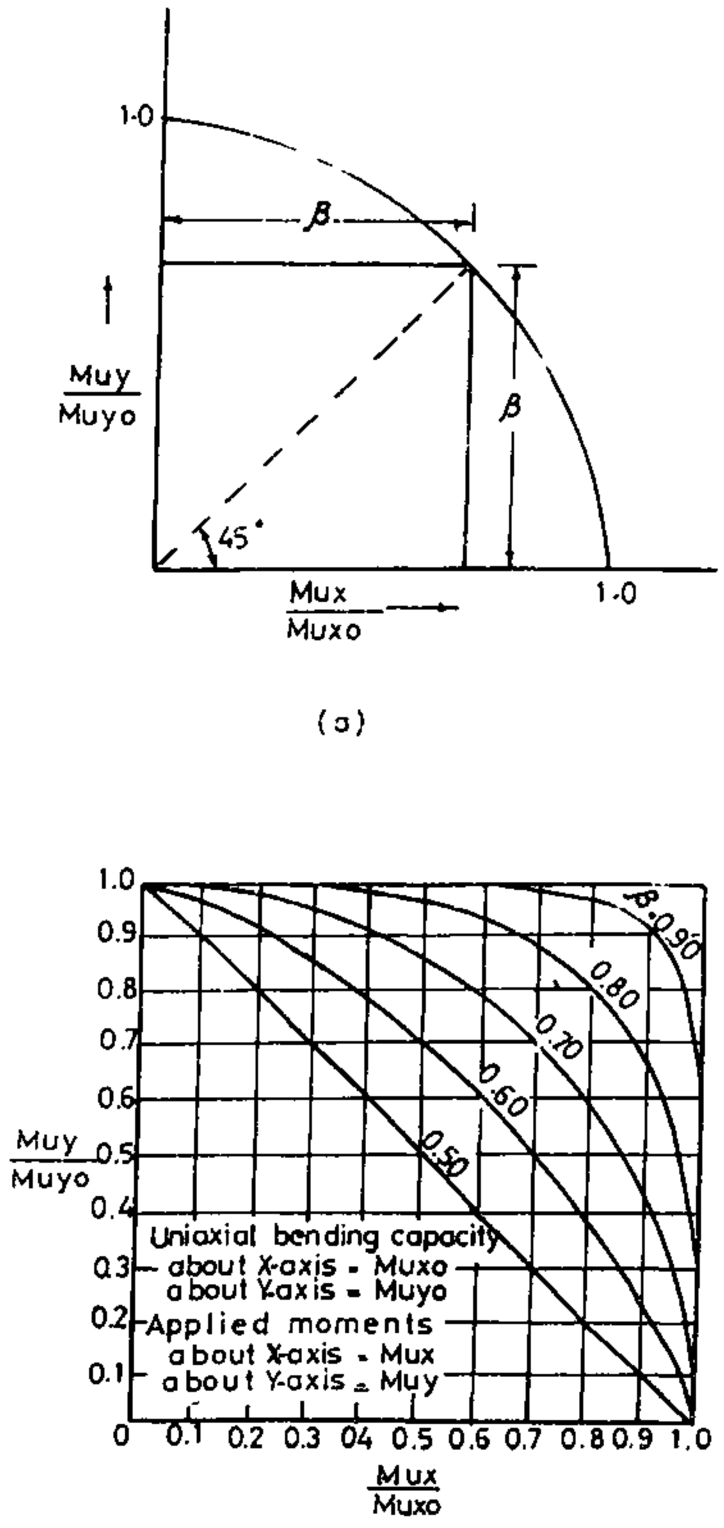

(a)

(b)

FIG. 2.8 (a) NON-DIMENSIONAL BIAXIAL MOMENTS INTERACTION CURVE AT CONSTANT LOAD (ISOLOAD)

(b) INTERACTION CURVES FOR BIAXIAL MOMENTS FOR DIFFERENT VALUES FOR β.

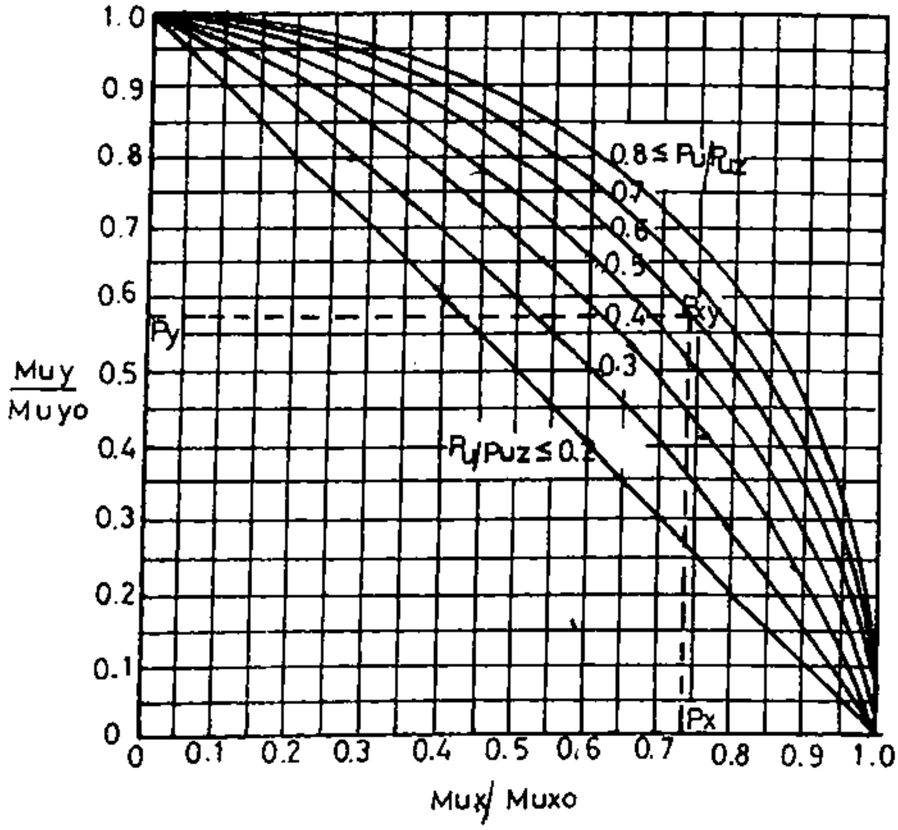

FIG. 2.9 INTERACTION CURVES FOR BIAXIAL MOMENTS FOR DIFFERENT VALUES OF Pu/Puz

(ii) Determine concentric load capacity P_{uz} given by the following equations :

For mild steel, $P_{uz} = 0.446\ f_{ck}\ A_c + 0.87\ f_y\ A_s$, and

for high strength deformed bars, $P_{uz} = 0.446\ f_{ck}\ A_c + 0.75\ f_y\ A_s$.

where f_{ck} = Characteristic compressive strength of concrete.

f_y = Characteristic strength of steel reinforcement.

A_c = Area of concrete.

A_s = Area of steel reinforcement.

(iii) Determine uniaxial moment capacities M_{uxo} and M_{uyo} combined with the given axial load P_u with the use of appropriate interaction curve for the section subjected to the combined axial load and uniaxial moment.

(iv) Calculate the values of M_{ux}/M_{uxo} and M_{uy}/M_{uyo} and plot them as p_x and p_y on Fig. 2.9. Draw vertical and horizontal lines from points p_x and p_y to intersect at point p_{xy}. If this point is within the interaction curve for the computed value of P_u/P_{uz}, then the section is safe, otherwise unsafe.

(v) If required, correct the assumed section and the reinforcement area successively until the strength of the section approaches the applied forces.

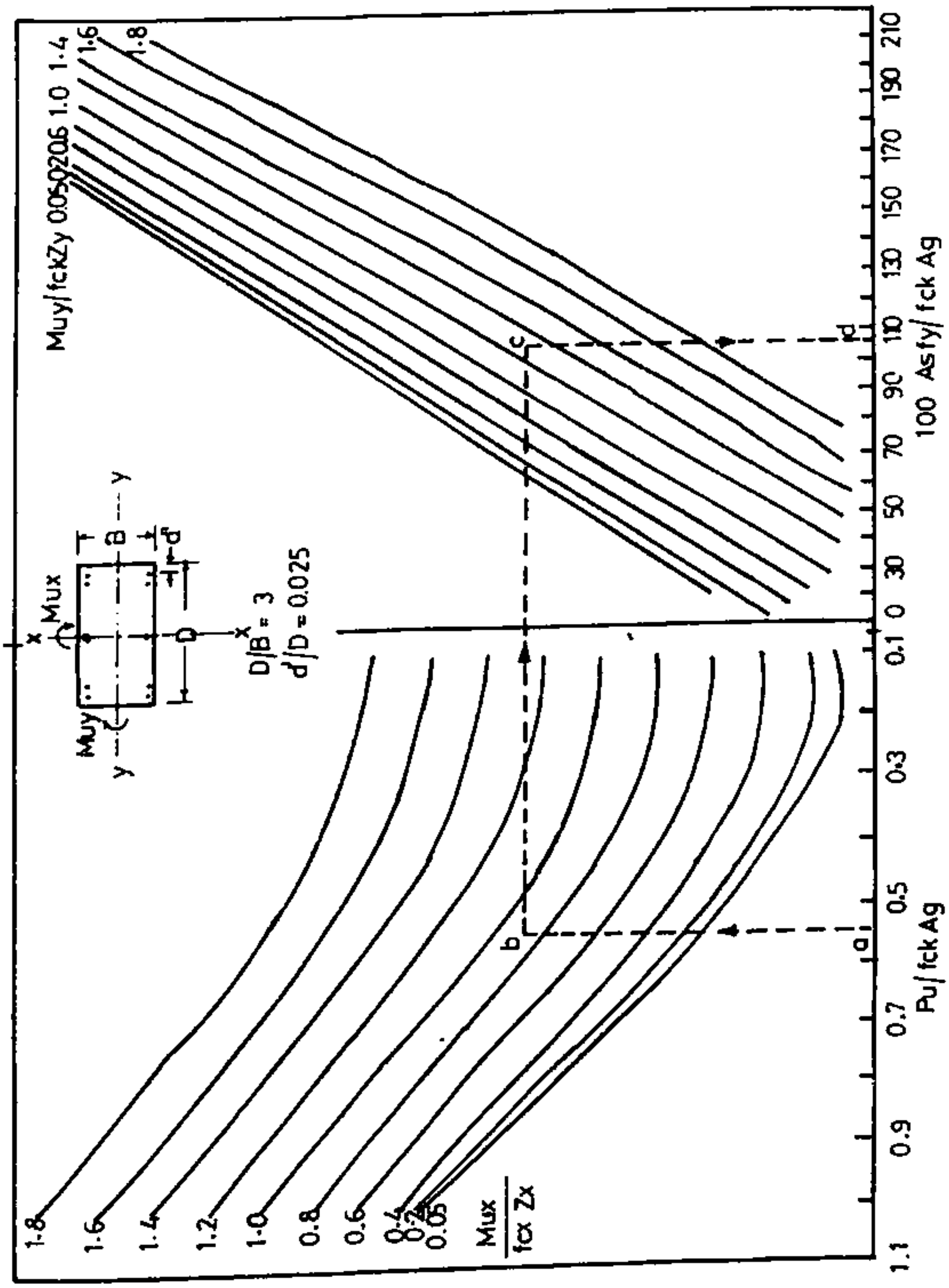

FIG. 2.10 INTERACTION CURVES FOR DIRECT DESIGN OF RECTANGULAR SECTION

2.7 REPORTED RESEARCH ON HOLLOW COLUMNS

Procter[102,104] is one of the very few researchers who have worked on hollow concrete columns. He experimented on plain and lightly reinforced hollow cylindrical cross-sections by testing them in compression under axial and eccentric loading. Vertical cracks developed all around the periphery at failure. There were two limit states induced by axial compression - axial splitting due to circumferential tension, and diagonal shearing. The study was however, limited to very small diameter spun concrete pipe columns. He followed it up by conducting further tests on hollow rectangular plain and lightly reinforced concrete columns. He set out modes of failure of hollow rectangular sections under axial loads and bending moments. Aspects considered were - most suitable column sections, behaviour of slender columns under axial and combined loading. Here again, the work was limited to very small sections, and no attempt was made to develope any design aids.

Liu and Chen[70,71,72] worked extensively on the strength of reinforced concrete spun pipe (hollow circular) columns. Once again the diameters considered were small and the study centered around failure modes of slender pipe columns. No attempt was made by them to develope design aids for hollow column sections.

Shen and Wen[125] studied the behaviour of reinforced concrete hollow core columns under cyclic loading. The influence of percentage of holloow core, the ratio between axial forces and compressive strength of concrete as well as the arrangement of stirrups and longitudinal reinforcement on hysteretic

CHAPTER 3 : COMPUTATIONAL APPROACH FOR STRENGTH OF RC COLUMN SECTION

3.1 GENERAL

The computational approach for strength of reinforced concrete column section based on the Limit State method of design has been discussed in this chapter. The material properties such as stress-strain relationship for concrete and steel, and failure criteria of column section have been adopted in accordance with IS:456-78[61]. A numerical technique has been used to integrate the stress over compression zone of concrete. The basic approach used in the computer program calculates the concrete and steel forces, checks the equilibrium of forces on the section and finally calculates the moment of resistance of the section with respect to the reference axes, for a given axial load.

Based on the computational approach discussed above, a computer program developed earlier[129] has been modified to cater to the hollow column sections with and without opening. The program can generate the X and Y coordinates of boundary points of the section, location of the centroid of reinforcement bars alongwith its area, as well as the section properties to be used as input for further execution. As such minimal effort is needed on the part of the user of the program.

The modified computer program can handle hollow column sections of any concievable shape and size, and reinforcement placement. However, the X and Y coordinates of the boundary points of the section, as well as the X and Y coordinates of the reinforcement bars requires to be inputted. This is facilitated by developing subroutines for generating the above data for a particular type of hollow column section with minimum basic input parameters.

3.2 ASSUMPTIONS

The basic assumptions made in the analysis and design of column sections are given below:

1. Plane sections normal to the axis of the member remain plane after the bending.
2. Design stress-strain relationship for concrete has been adopted as indicated in Fig. 3.1.
3. Tensile strength of concrete is neglected.
4. The design stress in reinforcements are derived from the strain using design stress-strain relationship as shown in Fig. 3.2.
5. Maximum strain in concrete at the outermost compression fibre of the section is 0.0035 when the neutral axis lies within the section and also in the limiting case when the neutral axis lies along one edge of the section as shown in Fig. 3.3.
6. For purely axial compression case the strain is assumed to be uniform and equal to 0.002 across the section. For section subjected to axial load and bending when there is no tension on the section the strain at highly compressed edge is 0.0035 minus 0.75 times the strain at the least compressed edge as shown in Fig. 3.4.

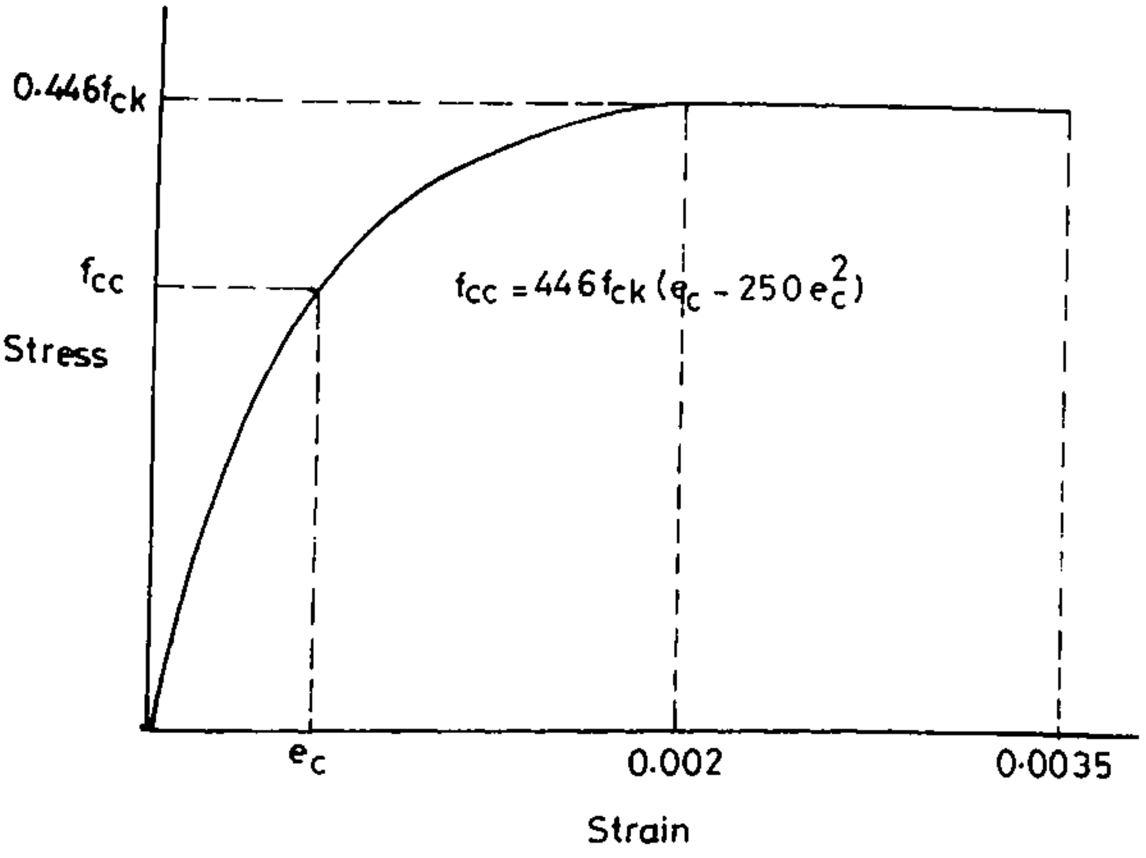

Fig.3·1 DESIGN STRESS-STRAIN CURVE FOR CONCRETE

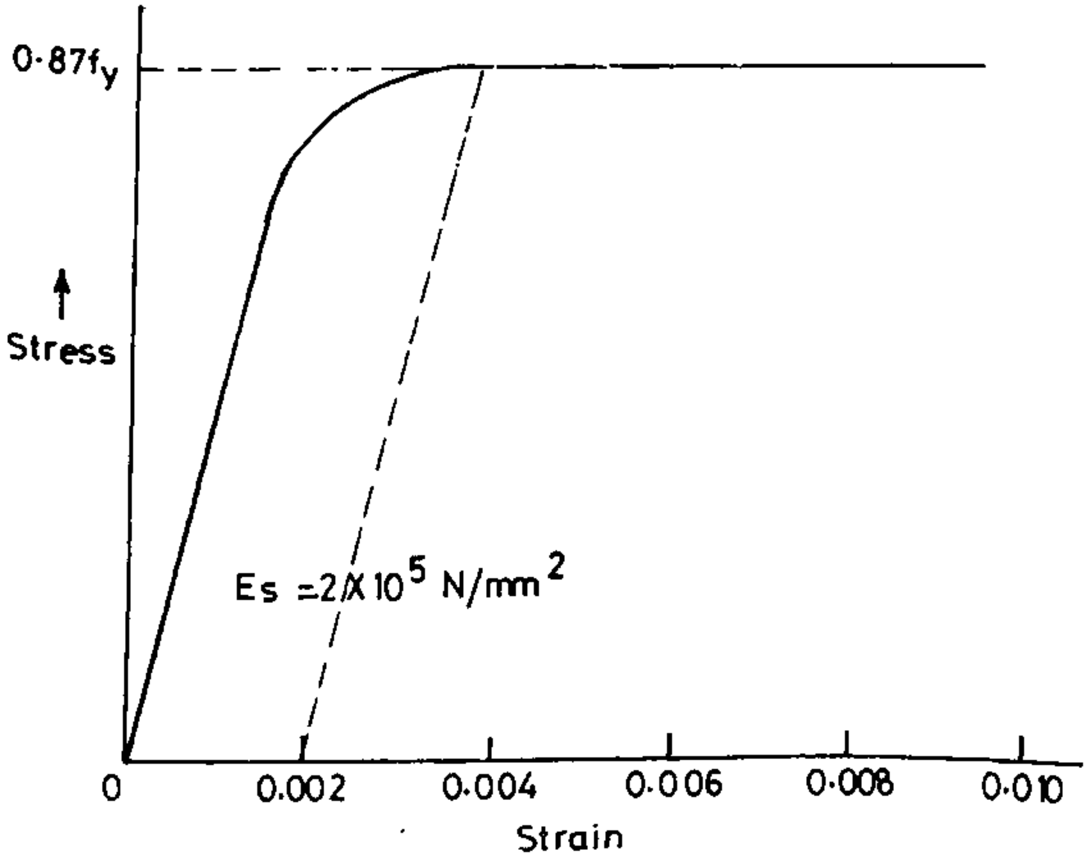

Fig. 3·2 DESIGN STRESS-STRAIN CURVE FOR REINF. STEEL

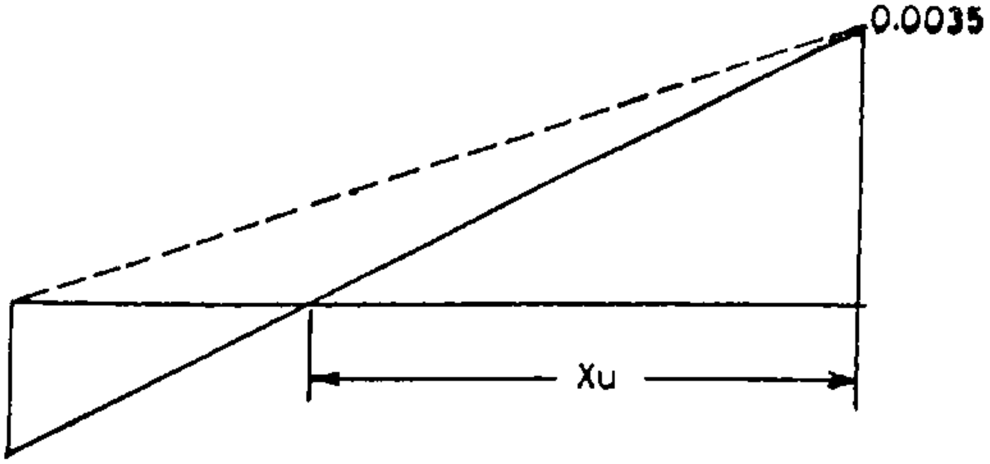

Fig 3.3 STRAIN DIAGRAM WHEN NEUTRAL AXIS IS WITHIN THE SECTION

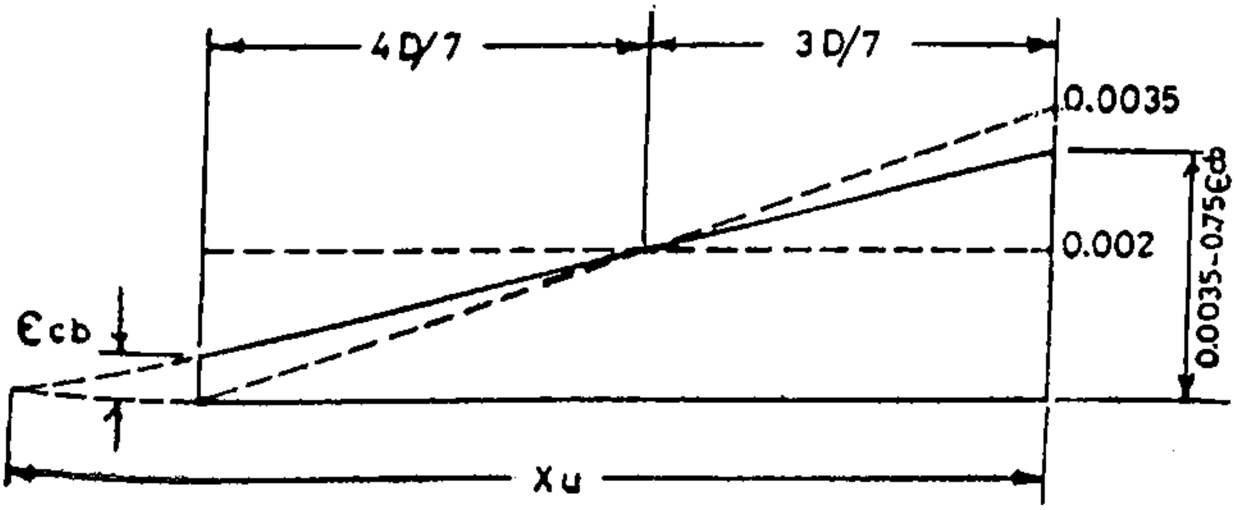

Fig 3.4 STRAIN DIAGRAM WHEN NEUTRAL AXIS IS OUT SIDE THE SECTION

7. Stress-strain relationship for concrete

The design stress-strain relationship as prescribed by IS:456-1978 has been followed. The same is reproduced in Fig.3.1. The stress-strain relationship has been approximated to be parabolic upto a strain of 0.002, thereafter the strain increases without any increase in stress. The equation for parabolic part of the curve is given as under :

$$
\begin{aligned}
f_c &= f_{co}\ [2(c/co) - (c/co)^2] \\
&= 0.466\ f_{ck}\ [2(c/0.002) - (c/0.002)^2] \\
&= 446\ f_{ck}\ (c-250\ c^2)
\end{aligned}
$$

8. Stress-strain relationship for steel

The modulus of elasticity of steel has been taken as 200000 N/mm^2 for all grades cold worked steel. The design stress-strain relationship for cold worked steel of grades F_e 415, F_e 500 and F_e 550 are shown in Fig. 3.2. It is linear upto a design stress of 0.8 f_yd and thereafter it is non-linear and is defined as given in Table 3.1.

TABLE 3.1 NON-LINEAR PART OF STRESS-STRAIN RELATIONSHIP FOR COLD-WORKED STEEL

DESIGN STRESS	INELASTIC STRAIN
0.8 f_yd	Nil
0.85 f_yd	0.0001
0.90 f_yd	0.0003
0.95 f_yd	0.0007
0.975 f_yd	0.0010
1.0 f_yd	0.0020

The total value of strain and design stress, corresponding to points defined above for F_e 415, F_e 500 and F_e 550 grades of steel are given in Table 3.2.

TABLE 3.2 SALIENT POINTS ON DESIGN STRESS-STRAIN CURVE FOR COLD-WORKED STEEL

STRESS LEVEL	F_e 415		F_e 500		F_e 550	
	Strain	Stress (N/mm^2)	Strain	Stress (N/mm^2)	Strain	Stress (N/mm^2)
(1)	(2)	(3)	(4)	(5)	(6)	(7)
0.80 fyd	0.0014	288.7	0.00174	347.8	0.000191	382.8
0.85 fyd	0.00163	306.7	0.00195	369.6	0.00213	406.7
0.90 fyd	0.00192	324.8	0.00226	391.3	0.00245	430.7
0.95 fyd	0.00241	342.8	0.00277	413.0	0.00297	454.6
0.975 fyd	0.00276	351.8	0.00312	423.9	0.00333	466.5
1.00 fyd	0.00380	360.9	0.00417	434.8	0.00439	478.5

Note : Linear interpotation may be done for intermediate values

3.3 COMPUTATION OF STRENGTH OF COLUMN SECTION

The computation of strength of column section for an assumed position of the neutral axis is mede by splitting the compression zone of concrete into a number of equal width strips as shown in Figs. 3.5 and 3.6. The length of each strip and the strain at its centroid are determined. The stress at the centroid of each strip is determined from the stress-strain relationship of concrete.

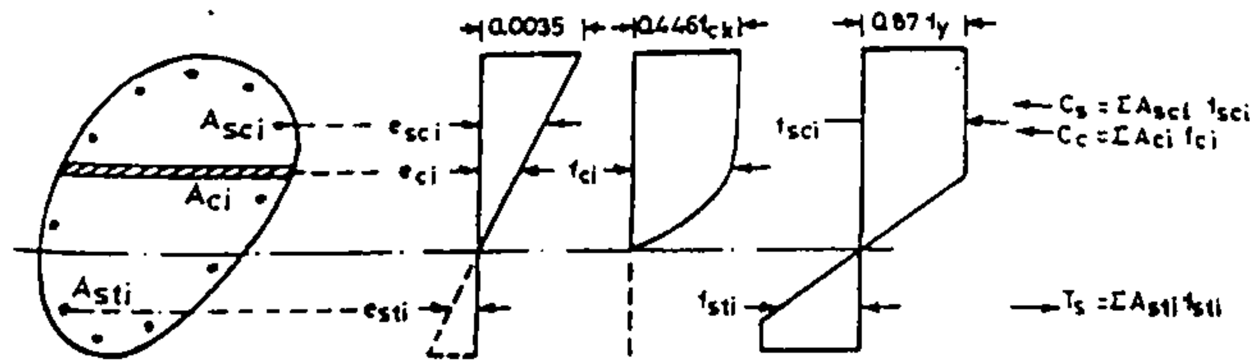

(a) Cross-section (b) Strain diagram Concrete Steel (d) Resultant force
(c) Stress diagram

Fig. 3·5 NUMERICAL APPROACH TO STRENGTH OF COLUMN SECTION

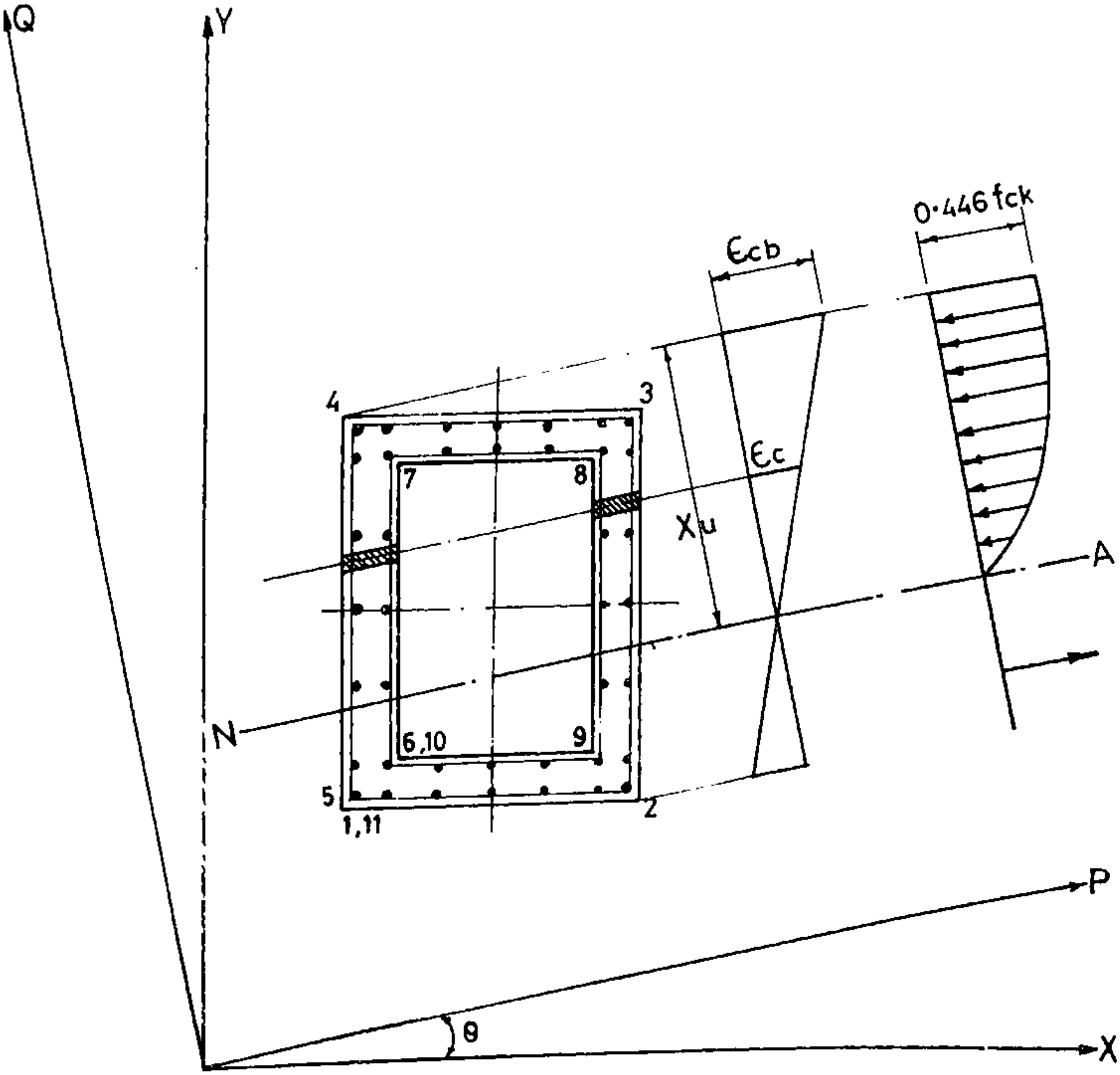

Fig 3.6 CROSS-SECTIONAL DETAILS, REFERENCE AXES, STRAIN AND STRESS DIAGRAMS

Then the compressive force in each strip and moments due to the compressive force in each strip about two orthogonal axes are ontained as given below:

Axial force in strip i :

$$P_{ci} = l_i \, b_i \, f_{ci}$$

Moment due to axial force P_{ci} in strip i about X-X axis :

$$M_{uxci} = P_{ci} \, x_{ci}$$

Moment due to axial force P_{ci} in strip i about Y-Y axis :

$$M_{uyci} = P_{ci} \, y_{ci}$$

where,

l_i = length of centreline of strip i

b_i = width of strip i

f_{ci} = stress at the center of strip i

x_{ci} = distance of mid point of centreline of strip i from X-X axis

y_{ci} = distance of mid point of centreline of strip i from Y-Y axis

Forces and moments due to reinforcement bars in the section are calculated by determining the strain in the reinforcement bars, and then the stress from their stress-strain curve as given below:

Axial force in reinforcement bar i :

$$P_{si} = A_{si} \, f_{si}$$

Moment due to axial force P_{si} in reinforcement bar i about X-X axis :

$$M_{uxsi} = P_{si} \, x_{si}$$

Moment due to axial force P_{si} in reinforcement bar i about Y-Y axis :

$$M_{uysi} = P_{si} \; y_{si}$$

where,

A_{si} = area of reinforcement bar i

f_{si} = stress in reinforcement bar i

x_{si} = distance of reinforcement bar i from X-X axis

y_{si} = distance of reinforcement bar i from Y-Y axis

The total axial force and moments are obtained by summing up the axial forces and moments due to the concrete strips and the reinforcement bars as given below:

Total axial force :

$$P_u = \sum_{i=1}^{m} P_{uci} + \sum_{i=1}^{m} P_{usi}$$

Total moment about X-X axis :

$$M_{ux} = \sum_{i=1}^{m} M_{uxci} + \sum_{i=1}^{m} M_{uxsi}$$

Total moment about Y-Y axis :

$$M_{uy} = \sum_{i=1}^{m} M_{uyci} + \sum_{i=1}^{m} M_{uysi}$$

3.4 DESIGN OF COLUMN SECTION

The design of a column section consists of choosing its cross-section, reinforcement detailings and then checking its adequancy by calculating ultimate axial force and moments of resistance with respect to the reference axes. The inclination and position of netural axis is assumed and the force and moments are calculated. The assumed inclination and position of neutral axis should satisfy the requirement of calculated axial force acting at the eccentricities of external load. If it is not satisfied then the assumed inclination and position of neutral axis is altered till the calculated internal force coincides with the point of application of the external load within acceptable accuracy. The section is considered safe if the given design load lies within its ultimate capacity otherwise, unsafe. Accordingly the assumed section and reinforcement are successively corrected until the strength of the section approaches the given design load and biaxial moments. This involves considerable computational effort.

Therefore, to facilitate the design, design charts have been prepared. For plotting the design charts for a given geometry and reinforcement detailing, the section is analysed to obtain a set of values of biaxial moments for a particular value of axial load and area of steel. A set of values of biaxial moments for a particular value of axial force is obtained by keeping the inclination of neutral axis constant and iterating the position of neutral axis until the calculated axial force compares with the chosen value of axial force within the specified accuracy. Once this is achieved, the moments of resistance with respect to the reference axes are calculated to obtain one set of values on the interaction curve. Subsequently, the inclination of neutral axis is changed and the above procedure is repeated to obtain other sets of values of moments of resistance for the specified axial load.

3.5 COMPUTER PROGRAM

The program is coded in FORTRAN-77 language and is suited to personal computers having minimum 1.0 MB RAM. The program consists of the MAIN SEGMENT assisted by an array of SUBROUTINES performing specific functions as and when called for, and then returining to the main segment for subsequent processing.

The main segment starts with reading the input data from the input data file. It then calls the appropriate subroutines to generate the coordinates of boundary points of the section and those of the reinforcement bars with respect to X and Y axes. Then it starts with the inclination of the neutral axis equal to zero degree and an initial set of values of the axial force and steel percentage. As a first trial a location of the neutral axis is adopted based on Bresler's[20,21] Method-II. Then the iteration of the neutral axis is made to arrive at the final location of the neutral axis. The next step is to divide the concrete area in the compression zone into a large number of equal width strips. Then the force in each strip and the moments due to the force in the strips are computed. Similarly the force in each reinforcement bar in tension and compression and moments due to these forces are computed and summed. Thus the total axial force and moments of the section is found out. This force is then compared with the chosen value of axial force. If the computed value of axial force does not compare with the chosen value of axial force within the permissible limit of accuracy, then the position of neutral axis is modified and the entire process is repeated till the strength of the section approaches the chosen value of axial force. At this stage the program calls appropriate subroutines to calculate the moments of forces in the strips and reinforcement bars about the netural axis and sums them up to find out the moment capacities in X and Y directions. Now the program moves back to the starting point and increases the angle of inclinaton of neutral axis by a predetermined value say, 5 degrees. All previous steps are repeated to obtain another pair of values of M_{ux} and M_{uy}. This loop is repeated till the entire range of angles is covered.

The above completes one cycle of opertions. Next, the steel precentage is increased by a predetermined amount and another cycle is run to obtain the sets of values of M_{ux} and M_{uy}. This is repeated till the final pedetermined limit of percentage of steel is reached.

Now the value of the axial force is increased suitably and the computation is repeated as above. Thus the program provides a set of data to enable the user to plot interaction curves for all possible combinations of loads and reinforcement percentage for a particular type of column section.

The definition of boundary points and reinforcement arrangements for some typical hollow column sections are presented in Figs. 3.7 to 3.13. The technique of defining the boundary points is self-explainatory in the figures. For reinforcement bars, the variables have been formulated in such a manner that all possible arrangements of bars can be arrived at. For example, the

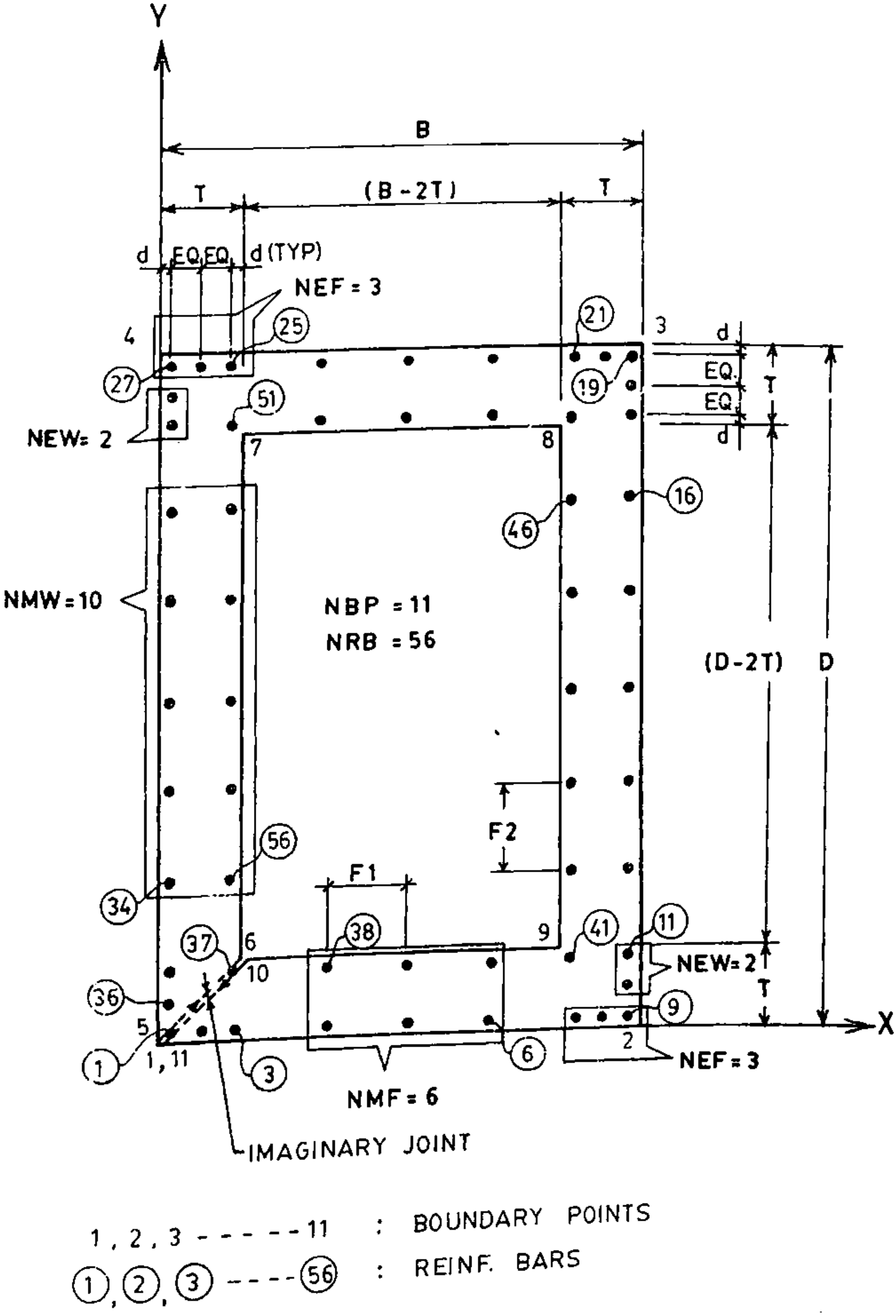

FIG. 3.7 GEOMETRY OF RECTANGULAR HOLLOW COLUMN SECTION

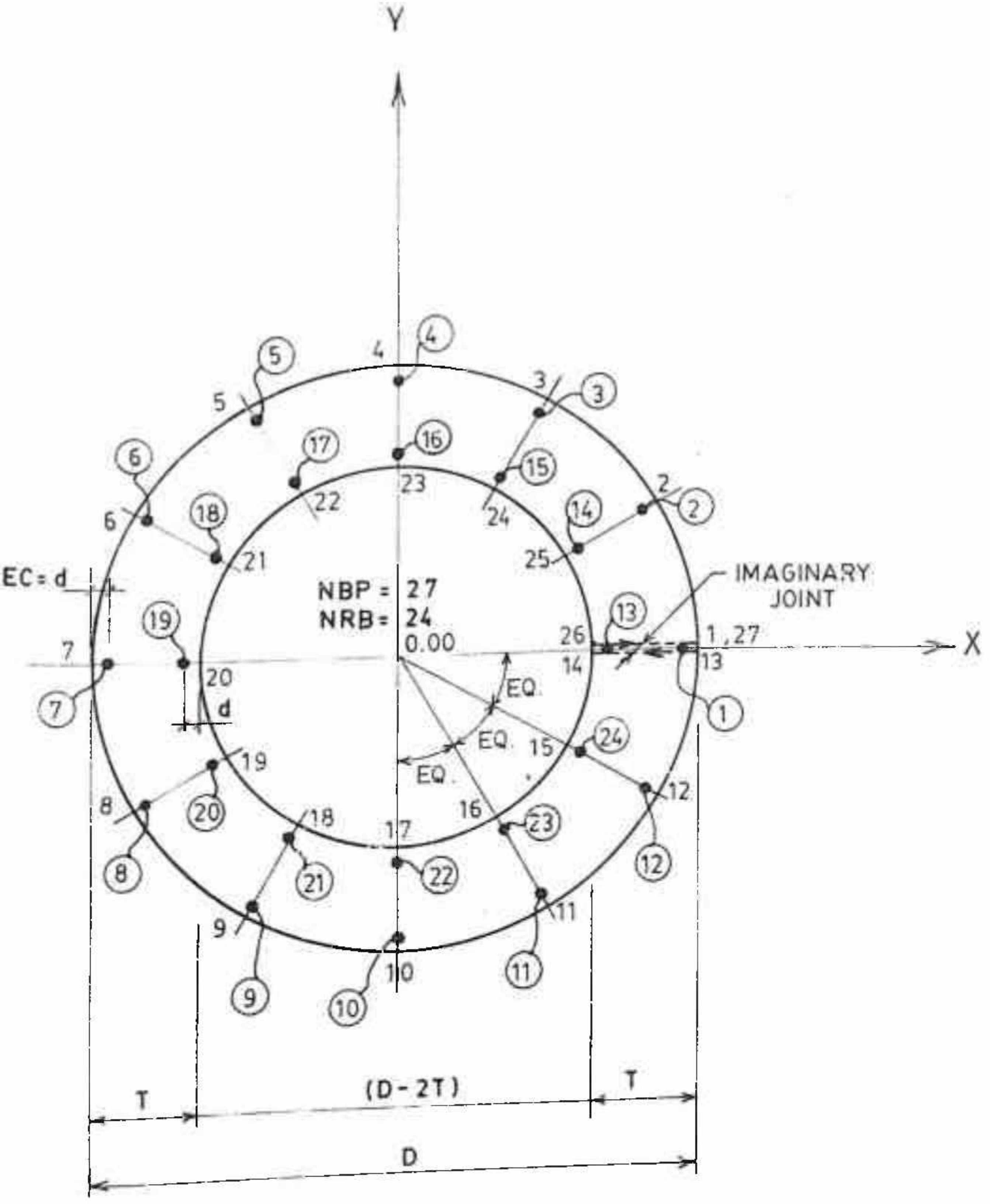

1 , 2 , 3 - - - - - - 27 : BOUNDARY POINTS

①, ②, ③ - - - - ㉔ : REINF. BARS

FIG. 3:8 GEOMETRY OF CIRCULAR HOLLOW COLUMN SECTION

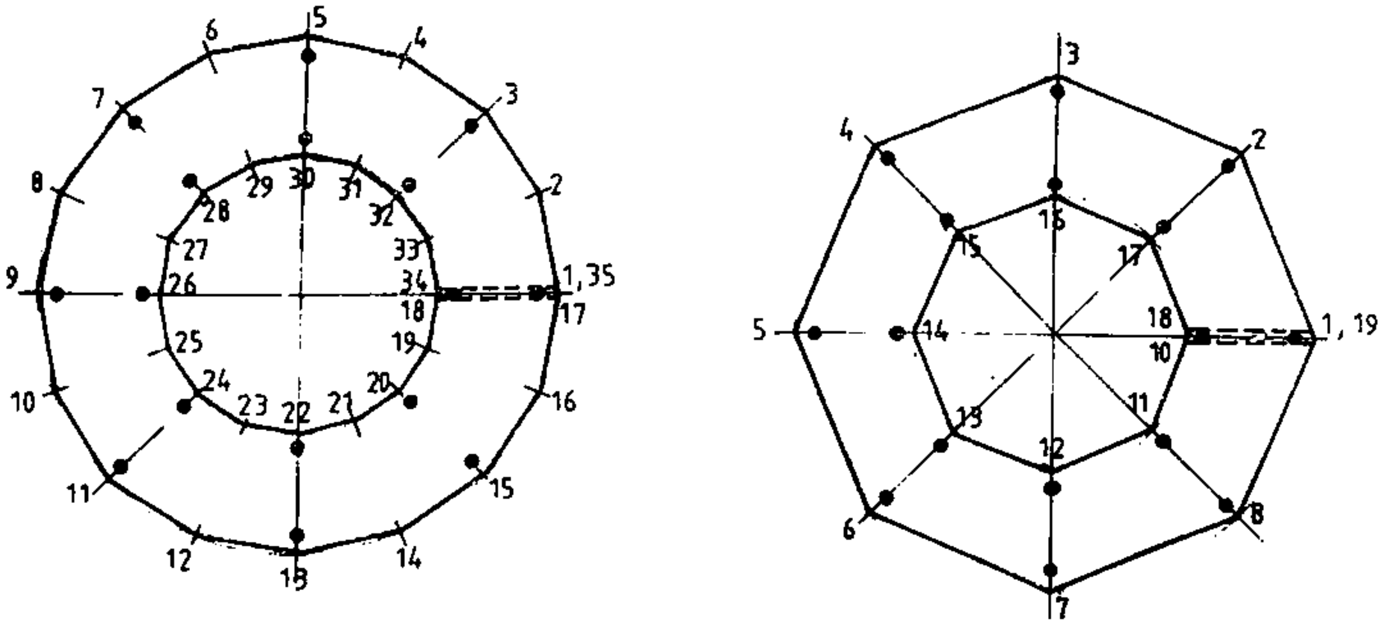

(a) CIRCULAR

NBP = 35 } VARIABLE
NRB = 16

(b) OCTAGONAL

NBP = 19 } FIXED
NRB = 16

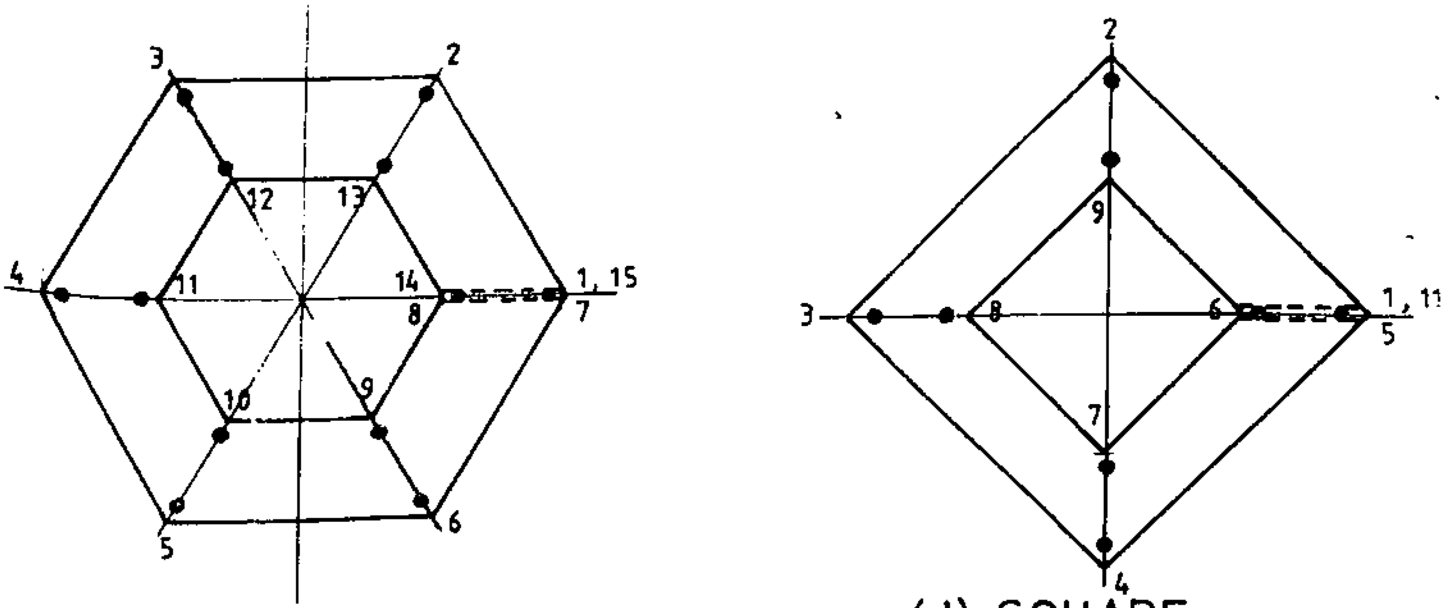

(c) HEXAGONAL

NBP=15 } FIXED
NRB=12

(d) SQUARE

NBP = 11 } FIXED
NRB = 8

FIG. 3.9 VARIATIONS OF CIRCULAR COLUMN SECTION

NOTE : (b), (c) & (d) HAVE LIMITATION OF NUMBER OF BARS

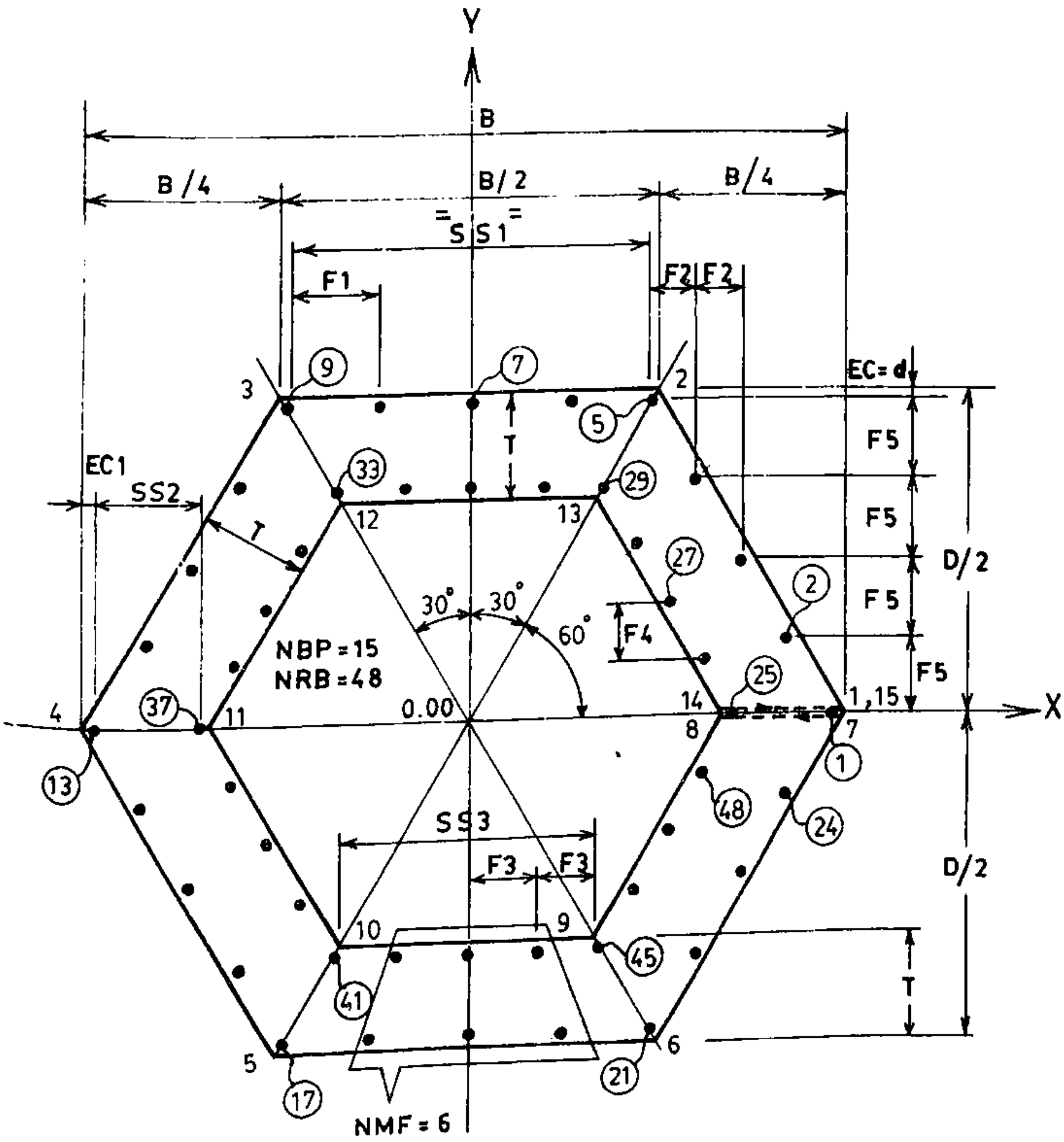

1 , 2 , 3 ------15 : BOUNDARY POINTS

①,②,③----(48) : REINF. BARS

FIG. 3-10 GEOMETRY OF HEXAGONAL HOLLOW COLUMN SECTION

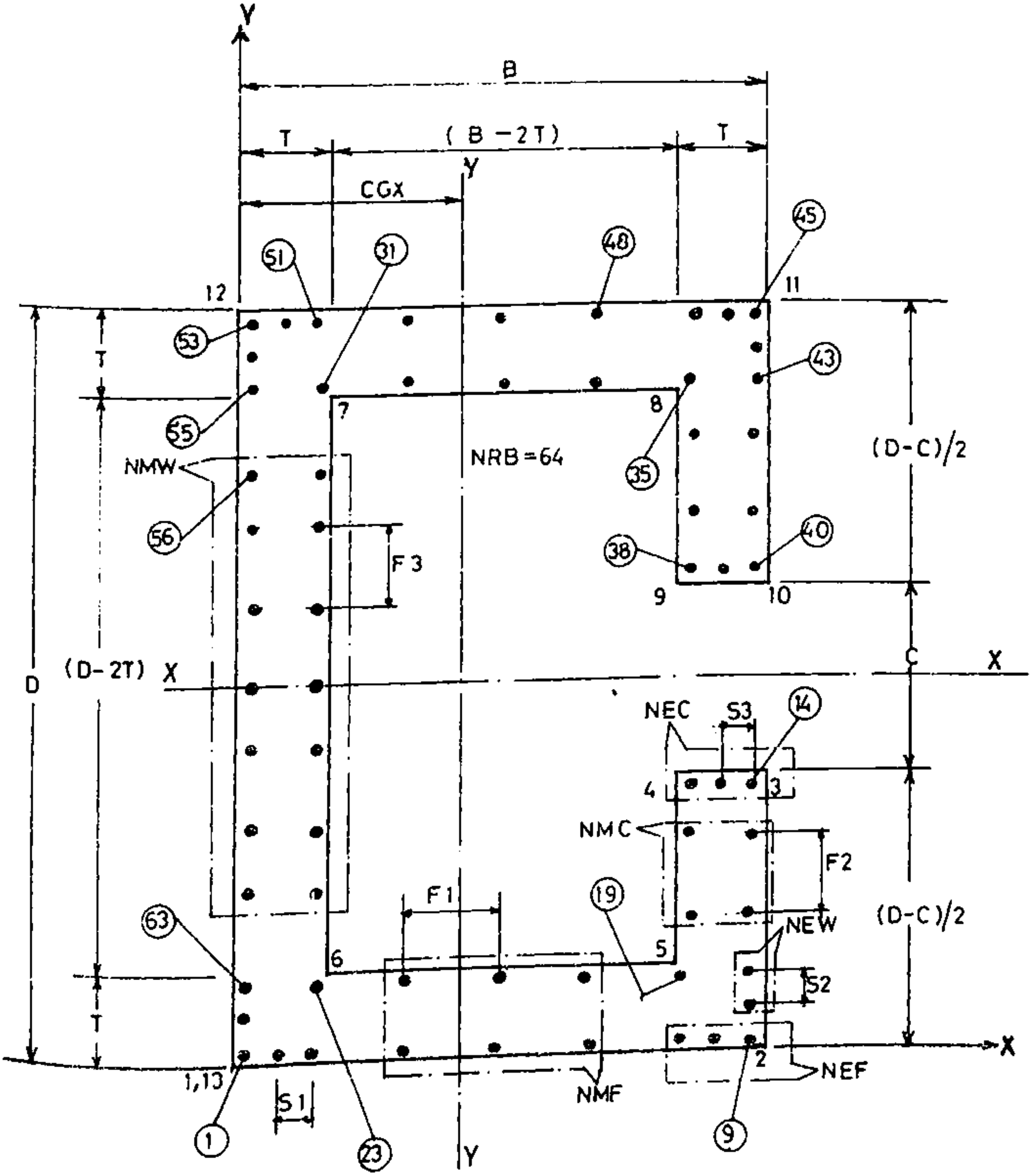

Fig. 3.11 GEOMETRY OF RECTANGULAR CEE COLUMN SECTION

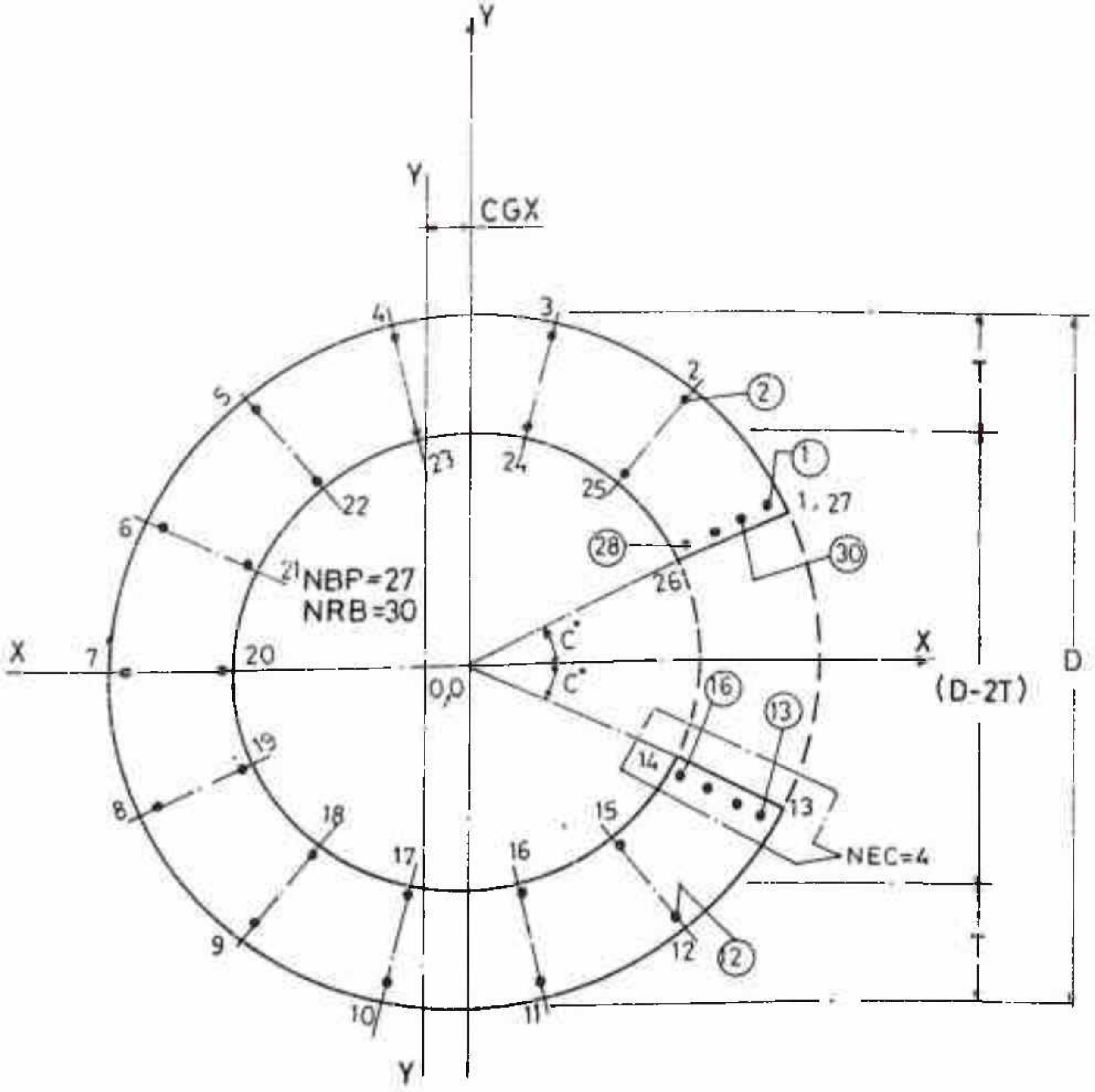

Fig. 3.12 GEOMETRY OF CIRCULAR CEE COLUMN SECTION

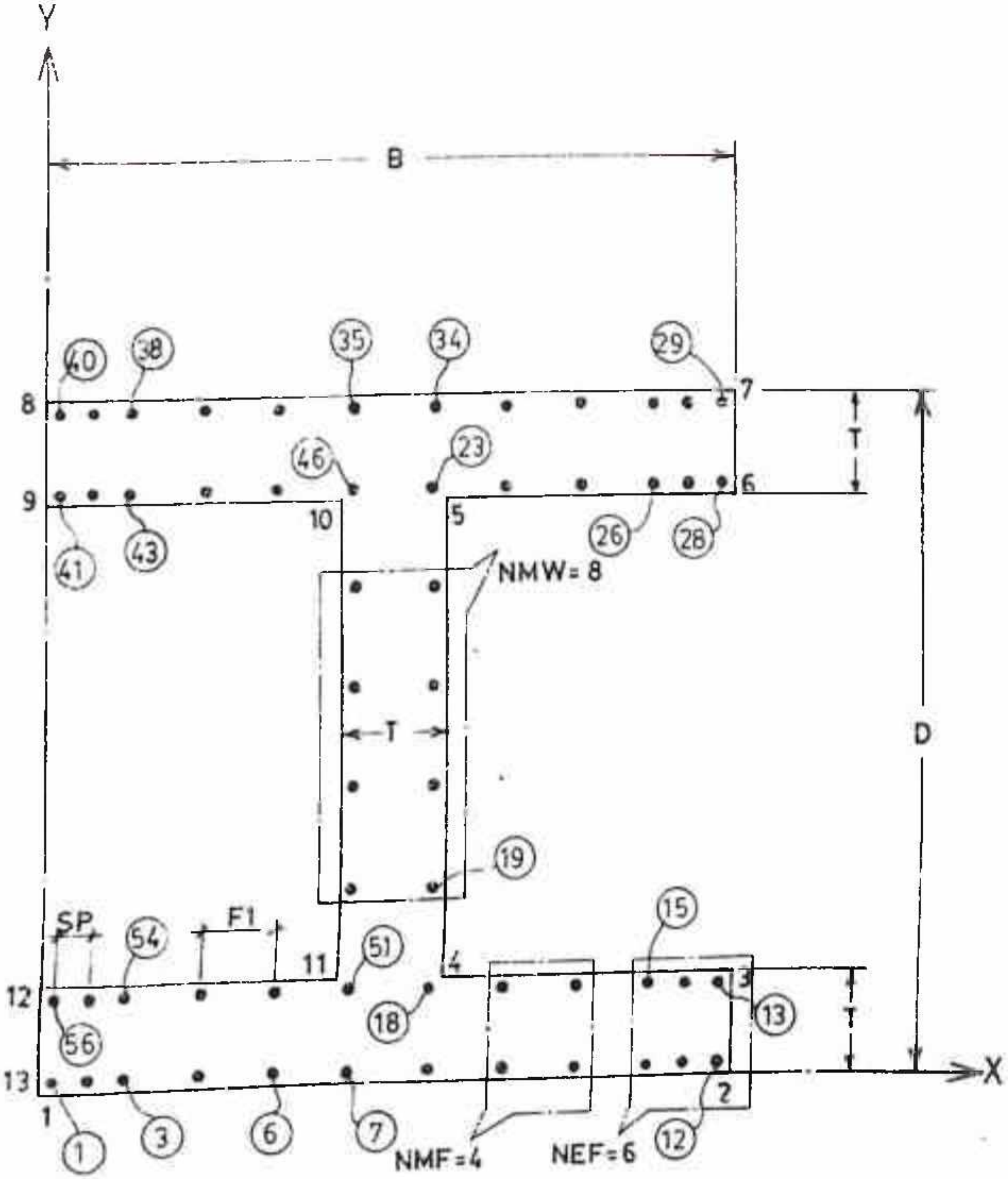

1, 2, 3 ------ 12 : BOUNDARY POINTS

①, ②, ③ ---- (56) : REINF. BARS

Fig. 3.13 GEOMETRY OF I/H SHAPED COLUMN SECTION symmetrical nature of the rectangular section dictates that equal amount of reinforcement should be placed on opposite faces. However, provision has been made for keeping different reinforcement quantities on the short and long faces of the section. Also, there is provision to vary the amount of corner reinforcement from a minimum of one at each corner to any number of bars. This kind of flexibility in reinforcement placement has been achieved by introducing two variables namely NEF and NMF as defined below and shown in Fig. 3.7. In addition to this,two more variables viz. NMF and NMW are introduced to represent the number of bars in the middle of each flange (short face) and web (long face) respectively, where,

NRB = Number of reinforcement bars

NEF = Number of bars at the end of flange

NMF = Number of bars in the middle of flange

NEW = Number of bars at tha end of web

NMW = Number of bars at the middle of web

3.6 CONCLUSIONS

The computational approach for the strength of hollow reinforced concrete column, based on the limit state method as per IS:456-78 has been adopted in this thesis. A computer program modified for hollow columns has been used for computing the ultimate force and moments. Suitable subroutines have been devised to calculate the X and Y coordinates of boundary points as well as those of the reinforcement bars with minimal manual data input. Necessary flexibility has been introduced in the subroutines in order to be able to define all possible patterns of reinforcement arrangement.

CHAPTER 4 : INTERACTION CURVES FOR HOLLOW RC COLUMNS WITHOUT OPENING

4.1 GENERAL

Interaction curves for hollow reinforcerd concrete column sections without opening are discussed in this chapter. The effect of reinforcement distribution on different geometries of hollow rectangular, circular and hexagonal column section without opening have been investigated to arrive at the optimum reinforcement distribution patterns. Some typical interaction curves are presented, covering a wide range of geometry and other design parameters. Use of the interaction curves has been illustrated with the help of design examples.

4.2 GEOMETRY OF SECTIONS

Hollow columns are expected to be of large girth, therefore a range of values of the depth/diameter D has been adopted. A minimum value of 1000 mm in view of the convenience in formwork and a maximum value of 4000 mm from architectural and structural considerations have been considered for the depth of the section. The breadth of the section B for rectangular sections has been expressed in terms of the depth-to-breadth (D/B) ratio. Values of D/B ratio equal to 1.0, 1.5, 2.0, 3.0 and 4.0 have been considered from architectural point of view. A minimum value of the thickness of wall, T equal to 100 mm has been adopted from the considerations of reinforcement placement and proper concreting. The maximum value of T may be limited to 500 mm, for beyond this value the advantage of using hollow sections will cease to accrue. A minimum clear cover of 40 mm to the main reinforcement bars is provided where T is more than 200 mm. For T less than or equal to 200 mm a minimum clear cover of 25 mm to the main reinforcement bars may be adopted.

Based on the above, the following range of geometrical parameters have been fixed :

4.2.1 RECTANGULAR SECTIONS

Dimension Range	D/B	D/T	d'/D
D < 1000 mm	1.0,1.5	5,10	0.03
1000 < D < 2500 mm	1.0,1.5,2.0	7.5, 10	0.02,0.03
2500 < D < 4000 mm	1.5,2.0,3.0,4.0	7.5,10,15	0.012,0.02

4.2.2 CIRCULAR AND HEXAGONAL SECTIONS

Dimension Range	D/T	d'/D
D < 1000 mm	5,10	0.03
1000 < D < 2500 mm	7.5, 10	0.02,0.03
2500 < D < 4000 mm	7.5,10,15	0.012,0.02

4.3 OPTIMUM REINFORCEMENT PATTERN

4.3.1 RECTANGULAR SECTIONS

Rectangular reinforced concrete sections have been found to be optimally reinforced when a major portion of the reinforcement is concentreated at the four corners having peak stresses under biaxially eccentric loading. However, beyond a certain percentage of the total reinforcement at corners, the section becomes uneconomical. Therefore a study has been made to arrive at the optimum reinforcement distribution for each geometry of column section. This is obtained by comparison of interaction curves corresponding to different reinforcement arrangements for the same column section. Figure 4.1 shows a plot of interaction curves for D=1000 mm; D/B=1.0; D/T=10, d'/D=0.03 and reinforcement arrangements (a), (b), and (c). Interaction curves have been obtained by plotting biaxial moments for a particular value of axial force. The area of steel has been kept same in all three cases. It may be observed that curve (c) corresponding to the reinforcement detailing having a concentration of 66.67 percent of the total reinforcement at the four corners (i.e. 16.67% of reinforcement at each corner) covers the maximum area on the interaction chart, and therefore respresents the optimum reinforcement pattern. Similarly Figs. 4.2 to 4.4 show the optimum reinforcement pattern for other geometries of rectangular hollow column sections.

In order to study the effect of wall thickness T on the optimum reinforcement pattern, interaction curves of the column section corresponding to Fig. 4.4 (D/T=12) have been plotted in Fig. 4.5 for a different value of D/T equal to 7.5. It is observed that the same reinforcement pattern as obtained from Fig. 4.4 is optimum. Therefore it can be infered that wall thickness T does not affect the optimum reinforcement pattern.

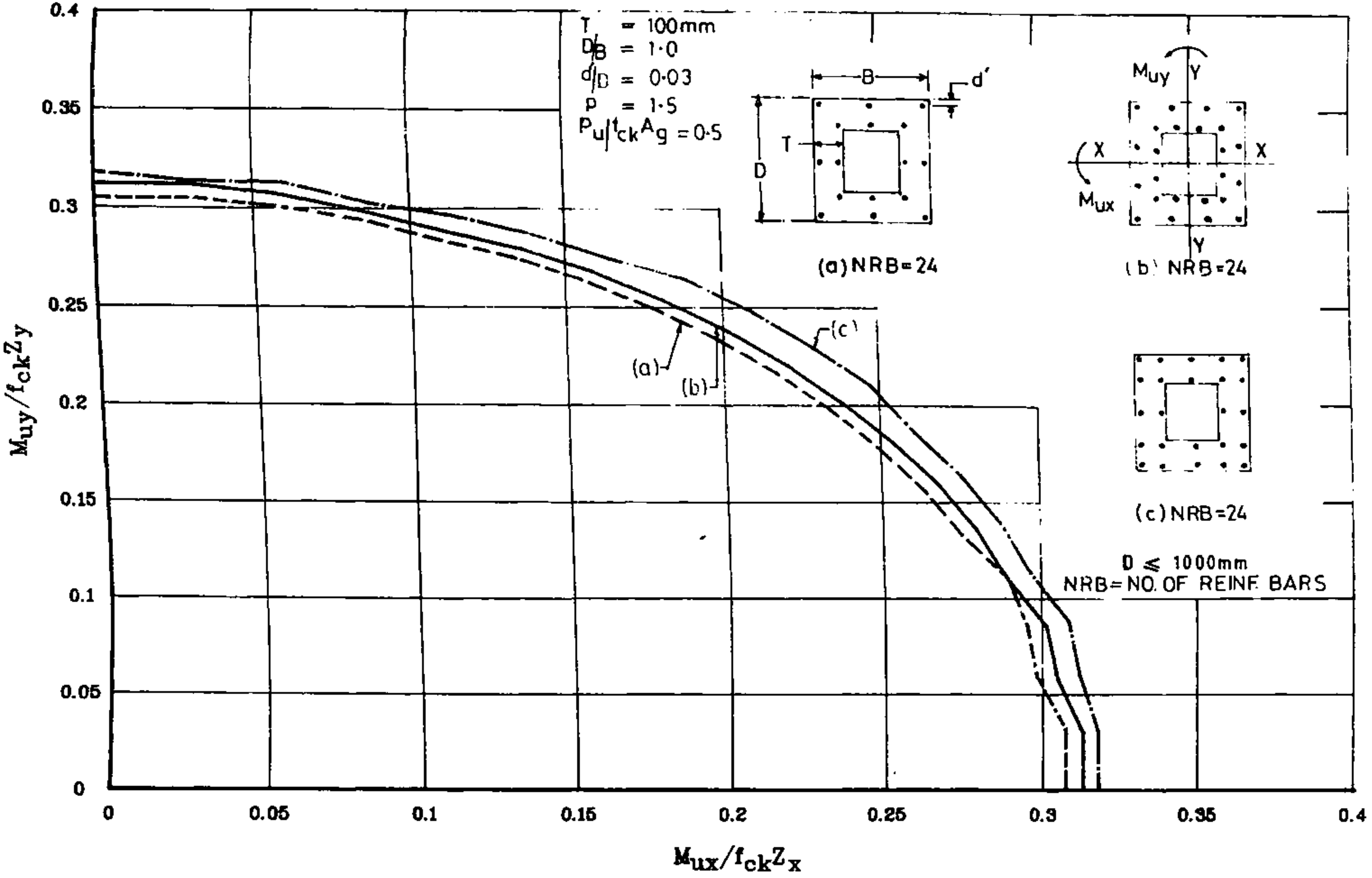

Fig. 4.1 INTERACTION CURVES FOR DIFFERENT TYPES OF REINFORCEMENT DETAILING FOR RECTANGULAR HOLLOW COLUMN SECTION

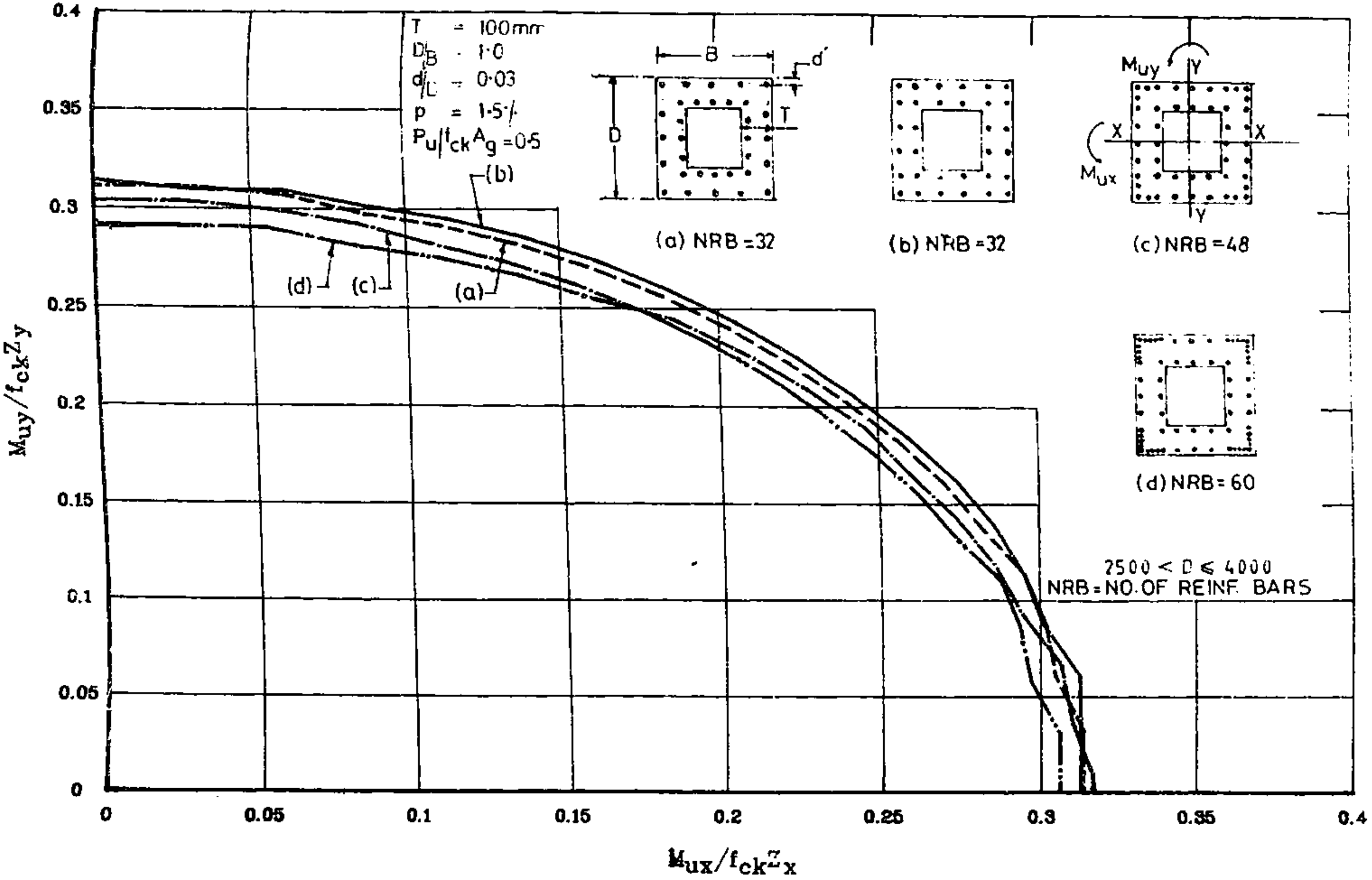

Fig. 4.2 INTERACTION CURVES FOR DIFFERENT TYPES OF REINFORCEMENT DETAILING FOR RECTANGULAR HOLLOW COLUMN SECTION

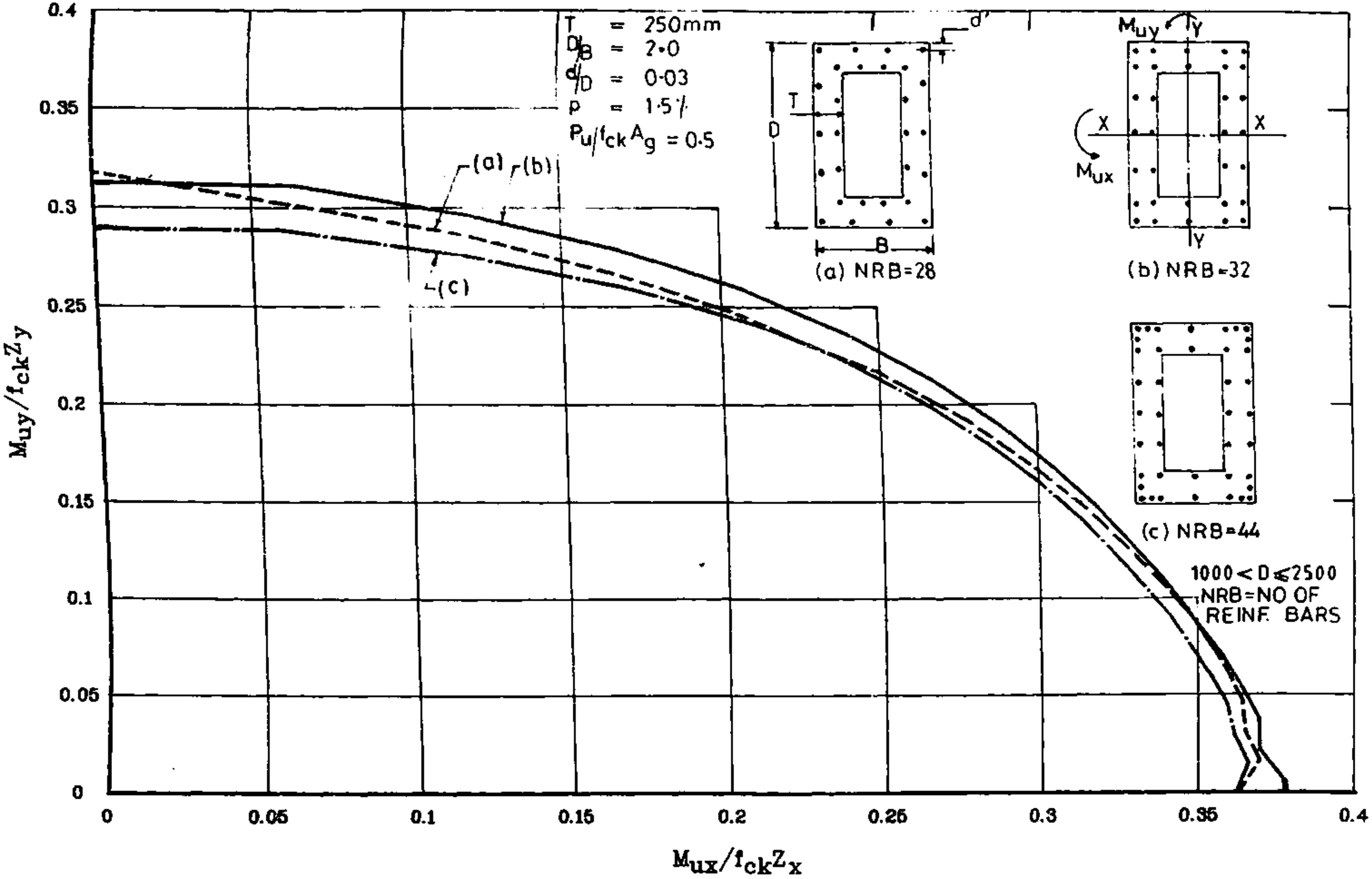

Fig. 4.3 INTERACTION CURVES FOR DIFFERENT TYPES OF REINFORCEMENT DETAILING FOR RECTANGULAR HOLLOW COLUMN SECTION

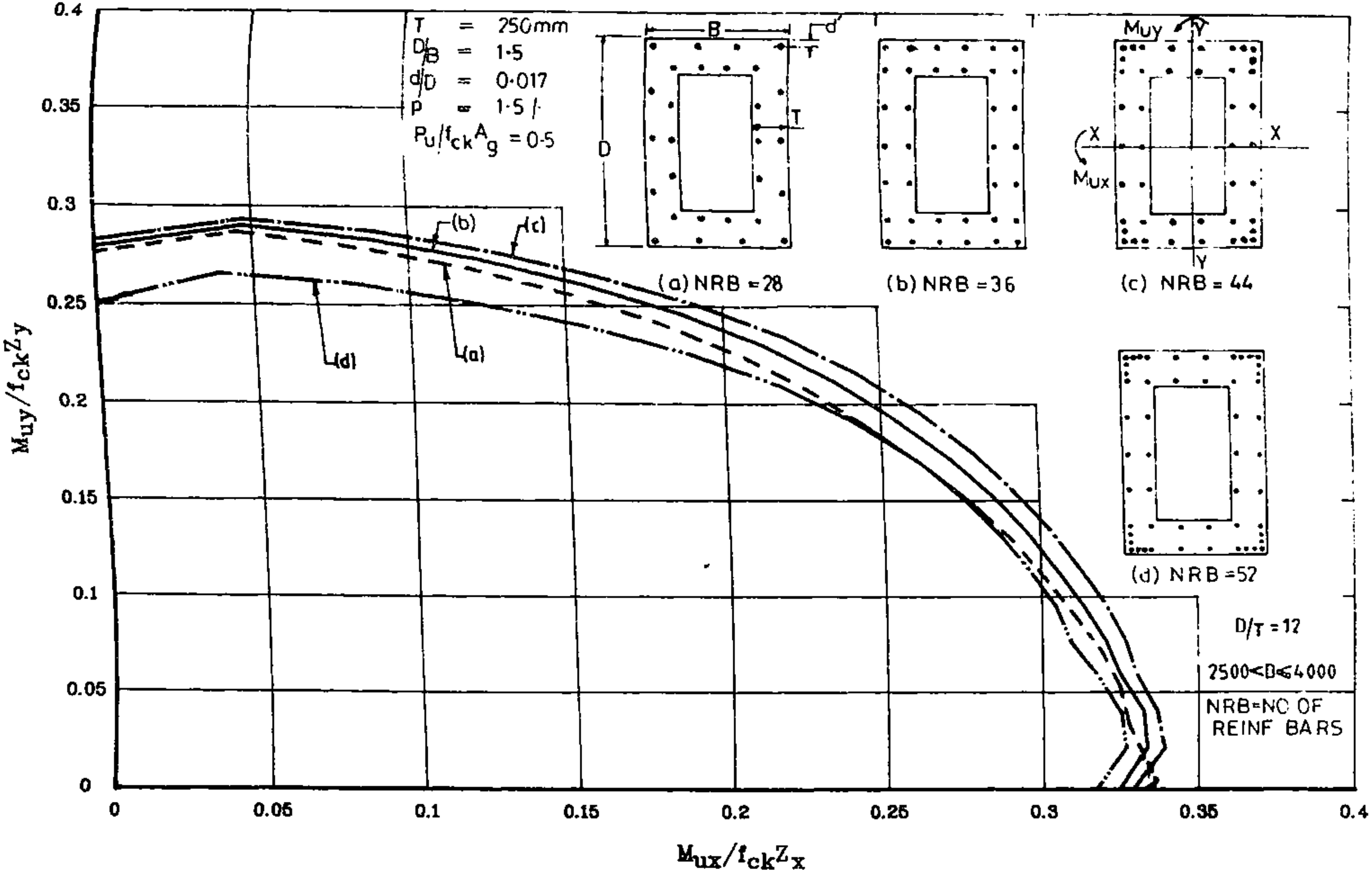

Fig. 4.4 INTERACTION CURVES FOR DIFFERENT TYPES OF REINFORCEMENT DETAILING FOR RECTANGULAR HOLLOW COLUMN SECTION

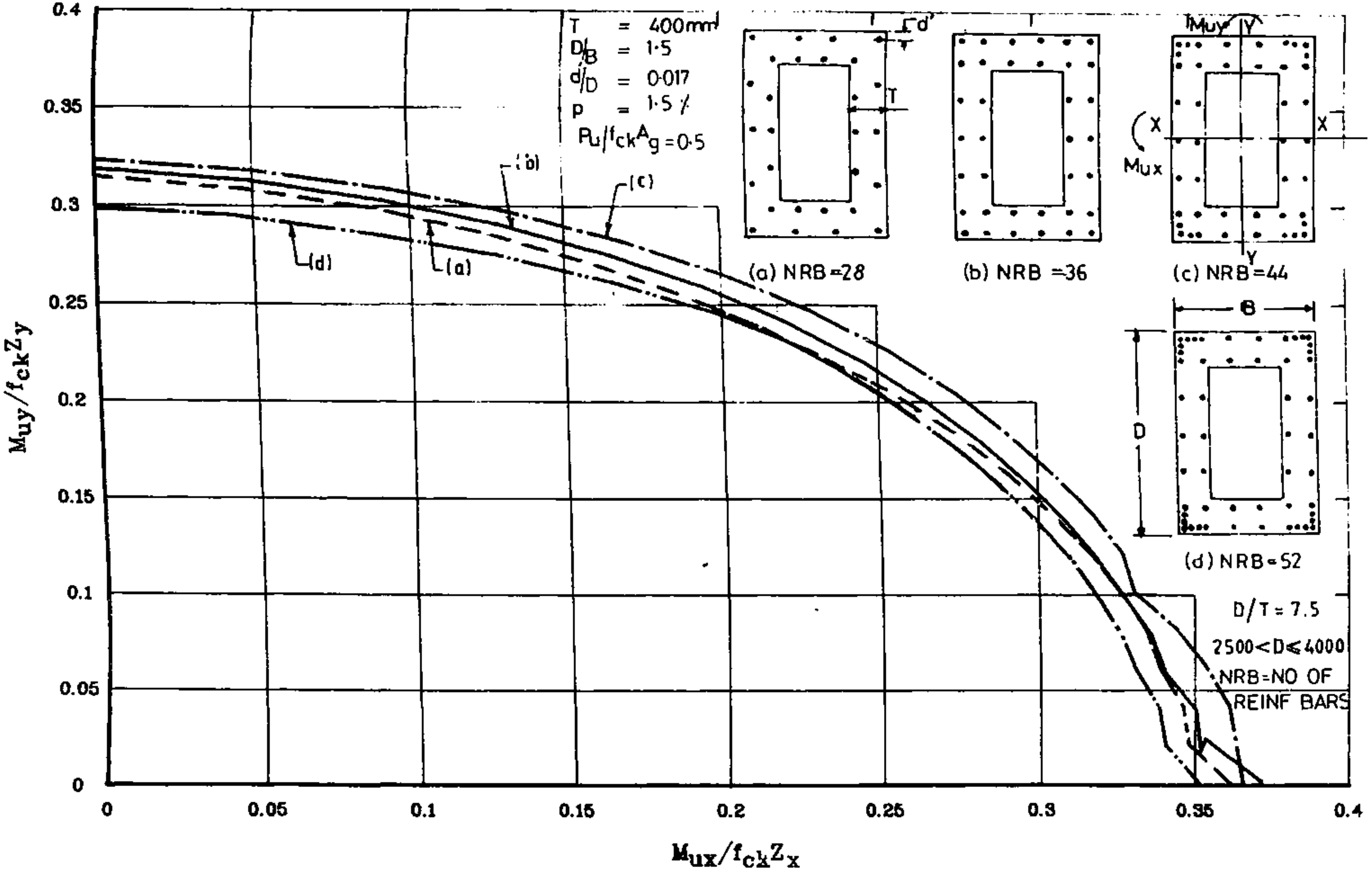

Fig. 4.5 INTERACTION CURVES FOR DIFFERENT TYPES OF REINFORCEMENT DETAILING FOR RECTANGULAR HOLLOW COLUMN SECTION

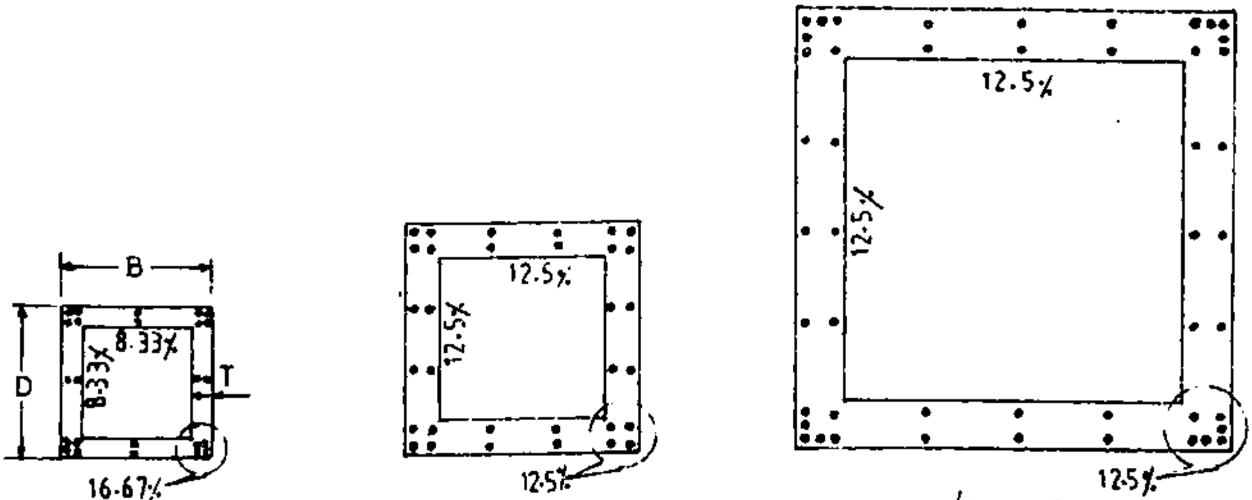

D/B=1.0
D≤ 1000 mm
NO-OF REINF
BARS (NRB)-24

D/B = 1.0
1000 < D ≤ 2500
NRB = 32

D/B = 1.0
2500 < D ≤ 4000
NRB = 48

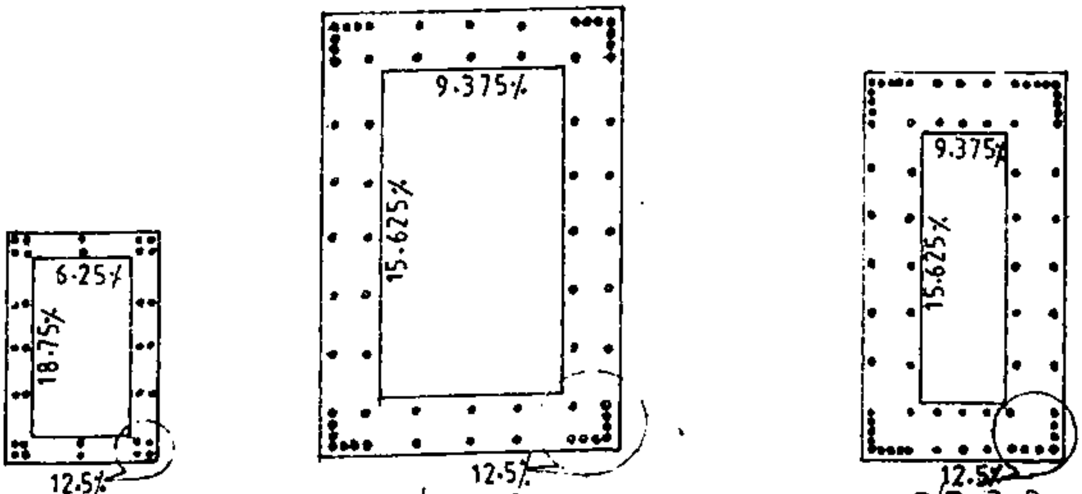

D/B = 1.5
1000 < D ≤ 2500
NRB = 32

D/B = 1.5
2500 < D ≤ 4000
NRB = 64

D/B = 2.0
1000 < D ≤ 2500
NRB = 64

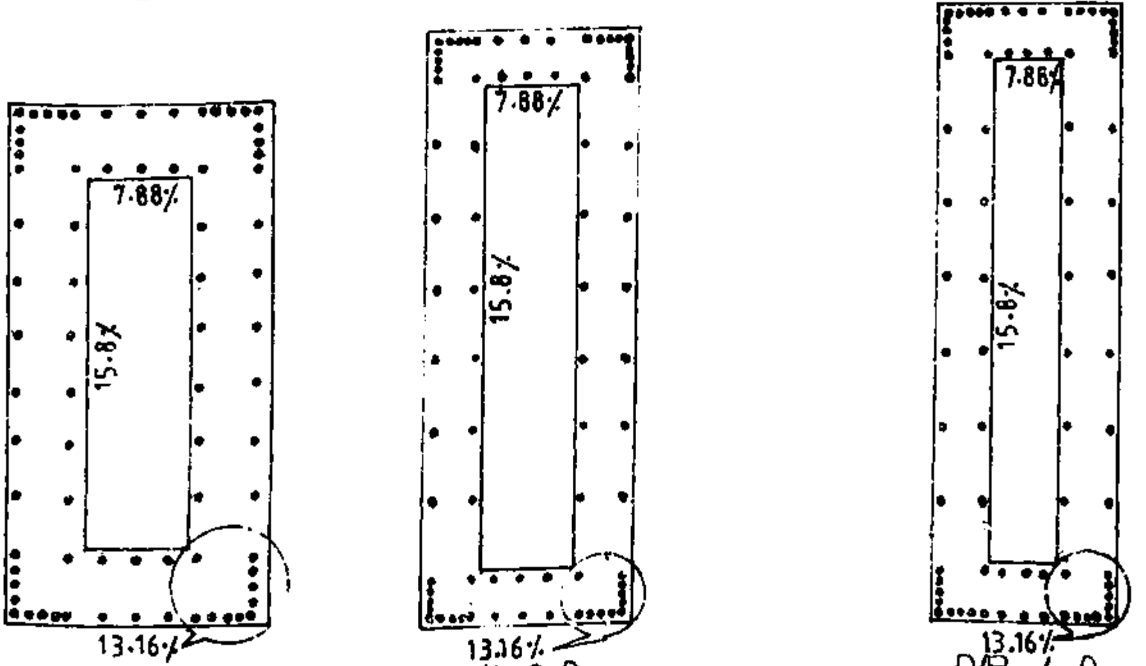

D/B = 2.0
2500 < D ≤ 4000
NRB = 76

D/B = 3.0
2500 < D ≤ 4000
NRB = 76

D/B = 4.0
2500 < D ≤ 4000
NRB = 76

Fig 4.6 OPTIMUM REINFORCEMENT ARRANGEMENT FOR HOLLOW RECTANGULAR COLUMNS

Based on the above, the optimum reinforcement pattern for various geometries of hollow rectangular reinforced concrete column are shown in Fig. 4.6.

The optimum reinforcement detailing as shown in Fig. 4.6 is based on the assumption that all bars are of the same diameter. However, in actual practice it may not be always possible to comply to this assumption. In such cases reinforcement bars of different diameters may be used as lon gas the percentage of steel area earmarked for a particular location as indicated in Fig. 4.6 is maintained.

4.3.2 CIRCULAR SECTIONS

As the circular section of column is axisymmetrical it shall be designed for uniaxial bending only considering the resultant of the biaxial moments. It may be reinforced in many ways such as with 4, 6, 8, 10 or more number of bars in each of inner and outer layers. The interaction curves have been developed assuming 50% of the total reinforcement steel placed on each of the inner and outer faces of the hollow column section. Fig. 4.7 shows the interaction curves for P_u vs M_u for different reinforcement detailing of the same dimensional parameters and area of steel of the column section. It is observed that the interaction curves with 8 or more number of bars overlap each other, therefore, it may be inferred that the hollow circular section with 8 or more number of bars may be designed with the same interaction curve drawn by considering a minimum of 8 number of bars is each layer. Similar inferences have also been drawn for other values of D/T ratio of circular hollow column section.

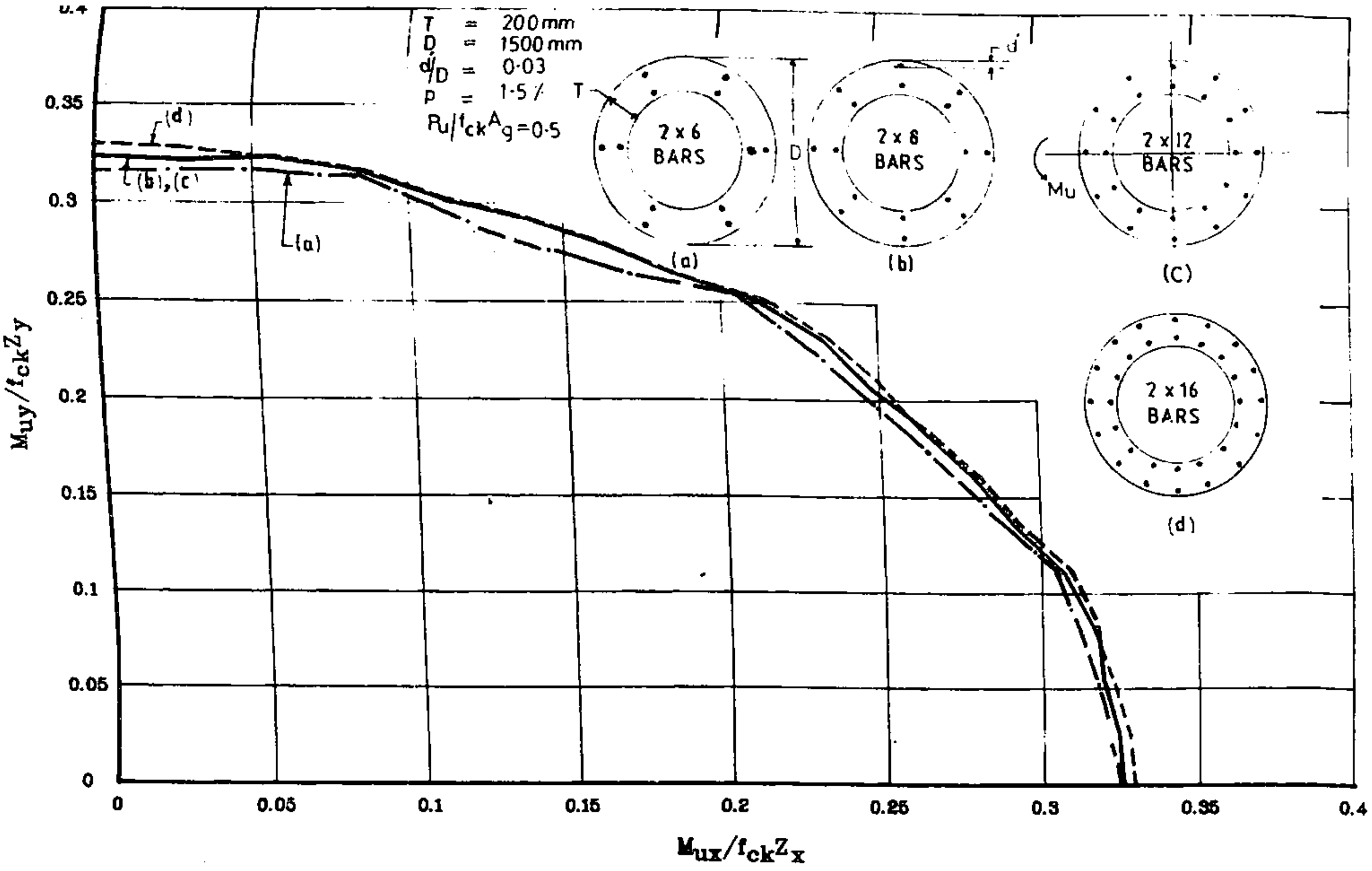

Fig. 4.7 INTERACTION CURVES FOR DIFFERENT TYPES OF REINFORCEMENT DETAILING FOR CIRCULAR HOLLOW COLUMN SECTION

4.3.3 HEXAGONAL SECTIONS

The behaviour of the hexagonal hollow reinforced concrete column depends on its overall depth D, wall thickness T and the type of reinforcement detailing. Generally it is reinforced with bars at corners and on flat faces. The number of bars on the flat faces may vary. Fig. 4.8 shows the interaction curves for different reinforcement detailing of the same dimensional parameters and area of steel of the column section. The interaction curves have been plotted for biaxial moments M_{ux} vs M_{uy} for a particular value of axial force P_u. As in the case of circular hollw section, it is infered that the hollow hexagonal shape of column with 12 or more number of bars may be designed with the same interaction curves drawn by considering a minimum of 12 bars in each of the inner and outer layers. Similar inferences have also been drawn for other values of D/T ratio of the column section.

4.4 INTERACTION CURVES

The interaction curves (design charts) for various geometrical parameters have been obtained by plotting biaxial moments for different values of areas of steel and a particular value of axial force. For wider applicability of the design charts, the axial force P_u, biaxial moments M_{ux} and M_{uy} and area of steel A_s have been expressed in non-dimensional form as $P_u/f_{ck} A_g$, $M_{ux}/f_{ck} Z_x$, $M_{uy}/f_{ck} Z_y$ and $100\ A_s\ f_y/f_{ck}\ A_g$ respectively.

For axisymmetrical circular hollow column section, the interaction curves have been obtained by plotting axial force and

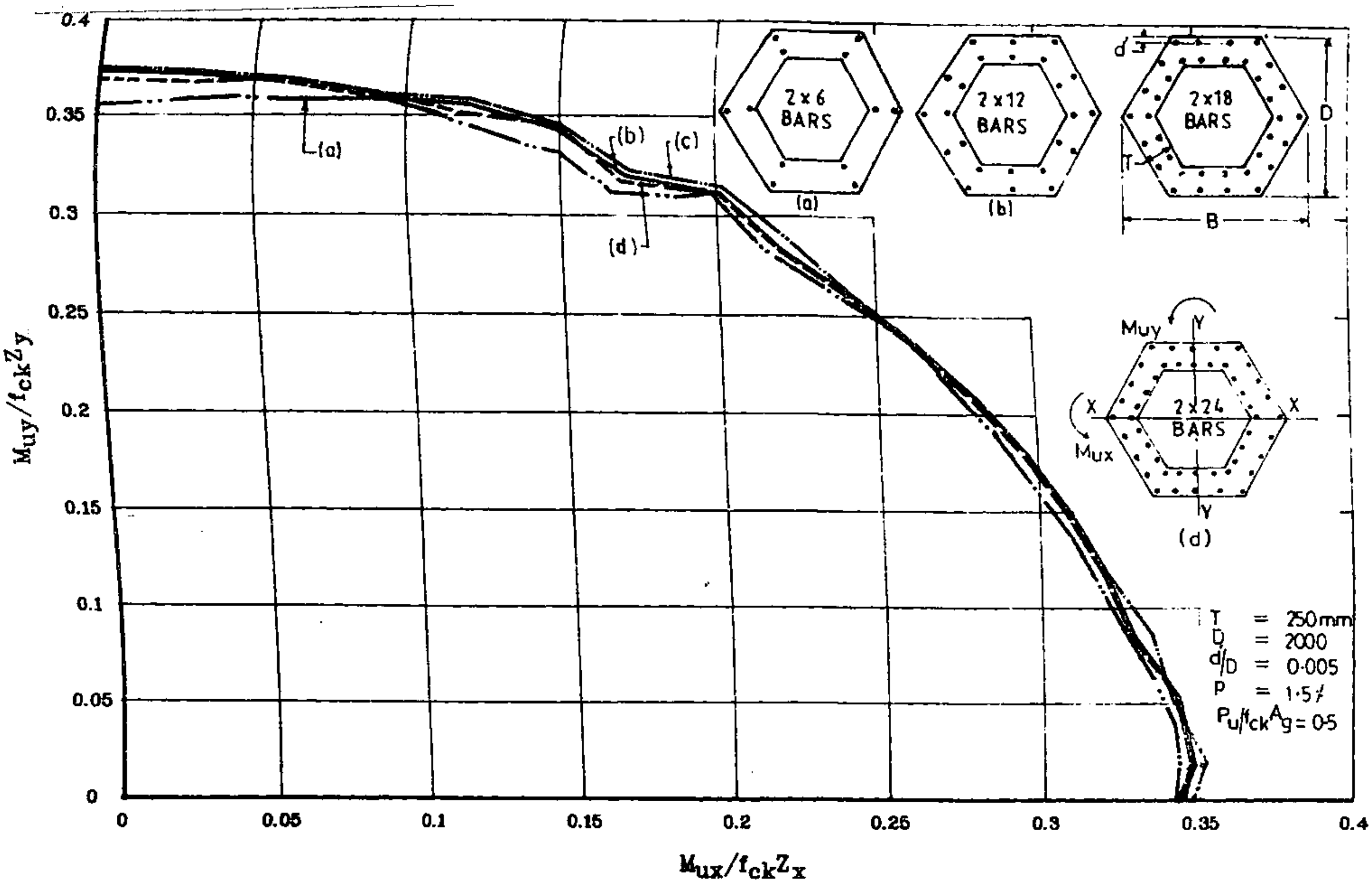

Fig. 4.8 INTERACTION CURVES FOR DIFFERENT TYPES OF REINFORCEMENT DETAILING FOR HEXAGONAL HOLLOW COLUMN SECTION

uniaxial moment for various valuesd of area of steel considering 12 number of bars in each layer. The axial force, moment and steel percentage have been expressed in non-dimensional form for plotting the interaction curves as stated above.

One quarter symmetrical interaction curves about two orthogonal axes of symmetry have been shown for a wide range of values of $P_u/f_{ck}A_g$ equal to 0.1, 0.2, 0.3, 0.4, 0.5, 0.6, 0.8 and 1.0. Interaction curves for four values of $P_u/f_{ck}A_g$ have been included in one chart. These charts have been plotted for a very wide range of values of pf_y/f_{ck} equal to 3 and 10 to 120 in increments of 10. The lower value of pf_y/f_{ck} equal to 3 has been adopted on the consideration that a minimum reinforcement of 0.15 percent of gross concrete area can be provided where L/D ratio is less than 3. For L/D ratio greater than 3, the minimum percentage of area of steel is 0.8 which can be reduced in case the loadings do not require 0.8 percent steel. In such cases the code provides for calculating the area of steel at the rate of 0.8 percent of the area of concrete required to resist the direct axial stress, and not upon the actual area.

It has been observed that the interaction curves for hollow circular columns and those of hollow hexagonal columns having similar geometrical attributes compare very well. Therefore hexagonal and octagonal shaped hollow columns, or for that matter polygonal sections having more than six equal faces can be designed using the interaction curves of circular columns.

All design charts have been plotted through computer using a standard CAD package, by making direct access to the program output. This has eliminated any chance of human error in data transfer and has ensured utmost accuracy. The interaction curves (design charts) for hollow rectangular, circular and hexagonal reinforced concrete columns appear in Appendix - A1.

4.5 DESIGN EXAMPLES

4.5.1 RECTANGULAR SECTION

Design the reinforcement for a hollow rectangular short column having overall depth of 1800 mm, breadth of 1200 mm, wall thickness of 180 mm and subjected to ultimate axial load of 4700 KN and ultimate bending moments of 8500 KN.m. and 2000 KN.m. about X and Y axes respectively. The effective cover to main reinforcement is 40 mm. The grades of concrete and steel are M.20 and Fe415 respectively.

Solution :

The cross-sectional details of the column are shown in Fig. 1.9.

Compute,

$d'/D = 40/1800 = 0.022 \doteq 0.02$

$D/B = 1800/1200 = 1.5$

$D/T = 1800/180 = 10$

$A_g = (1200 \times 1800) - (840 \times 1440)$

$= 950400 \text{ mm}^2$

$P_u/f_{ck} A_g = 4700 \times 10^3/(20 \times 950400) = 0.2473$

$\doteq 0.25$

$Z_x = 4.1576 \times 10^8 \text{ mm}^3$

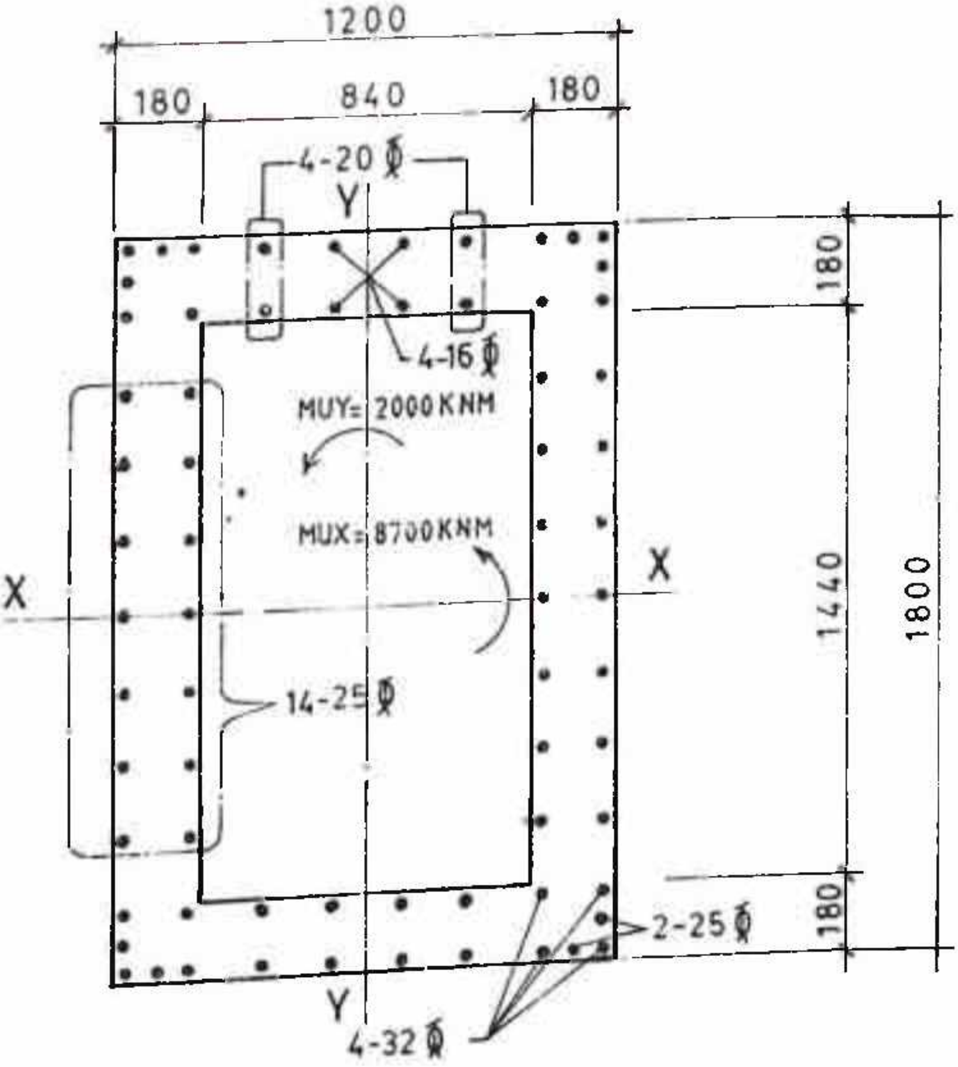

Fig. 4.9 DESIGN EXAMPLE OF HOLLOW RECTANGULAR COLUMN

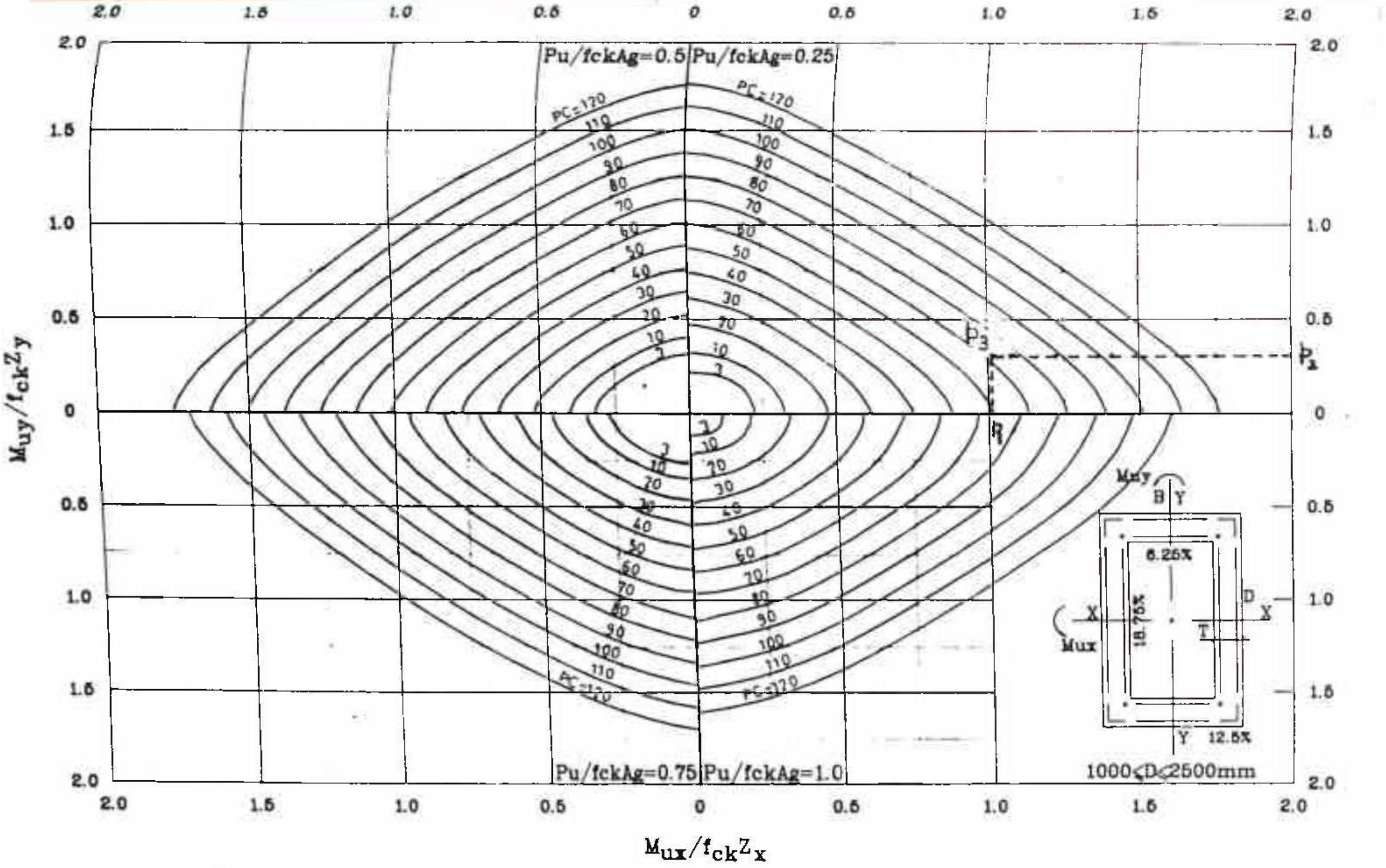

CHART A1·13 DESIGN CHART FOR RECTANGULAR HOLLOW COLUMNS

$D/B=1.5$; $d'/D=0.02$; $D/T=10$

$$Z_y = 3.1346 \times 10^8 \text{ mm}^3$$

$$M_{ux}/f_{ck}Z_x = 8500 \times 10^6/(20 \times 4.1576 \times 10^8)$$

$$= 1.022$$

$$M_{uy}/f_{ck}Z_y = 2000 \times 10^6/(20 \times 3.1346 \times 10^8)$$

$$= 0.319$$

Refer Chart A1.13 corresponding to D/B = 1.5, d'/D = 0.02 D/T = 10 and dimension range 1000 < D < 2500 mm.

The interaction curves for $P_u/f_{ck}A_g = 0.25$ are in the first quardrant. Point P_3 gives the value of pf_y/f_{ck} corresponding to $M_{ux}/f_{ck}Z_x = 1.022$ and $M_{uy}/f_{ck}Z_y = 0.319$ as follows :

$$PC = 100\,pf_y/f_{ck} = 70$$

$$\therefore A_s = 70 \times \frac{20}{415} \times \frac{950400}{100}$$

$$= 32062 \text{ mm}^2$$

For optimum reinforcement arrangement,

Corner steel = $0.125 \times A_s = 0.125 \times 32062 = 4008 \text{ mm}^2$

Provide 4-32 ϕ + 2-25 ϕ bars (Area of steel = 4196 mm^2) at each corner as shown in Fig. 4.9.

Flange steel = $0.0625 \times 32062 = 2004 \text{ mm}^2$

Provide 4-20 ϕ + 4-16 ϕ bars (Area of steel = 2056 mm^2) in each flange.

Web steel = $0.1875 \times 32062 = 6012 \text{ mm}^2$

Provide 14-25 ϕ bars (Area of steel = 6872 mm^2) in each web.

The reinforcement detailing as shown in Fig. 4.9 has been made keeping in mind the criterion of minimum spacing of bars at corners and maximum spacing in the web and flange as per IS:456-78.

4.5.2 CIRCULAR SECTION

Design the reinforcement for a hollow circular short column having outer diameter of 3000 mm, wall thickness of 200 mm and subjected to ultimate axial load of 17500 KN and ultimate bending moments of 6500 KNm. and 7400 KNm. about X and Y axes respectively. The effective cover to main reinforcement is 40 mm. The grades of concrete and steel are M.20 and Fe415 respectively.

Solution :

The cross-sectional details of the column are shown in Fig. 4.10(a)

Compute,

$$d'/D = 40/3000 = 0.0133 \simeq 0.12$$

$$D/T = 3000/200 = 15$$

$$A_g = \pi/4\ (3000^2 - 2600^2)$$

$$= 1759292\ \text{mm}^2$$

$$P_u/f_{ck}A_g = 17500 \times 10^3/(20 \times 1759292) = 0.4973$$

$$\simeq 0.50$$

$$Z = 1.1553 \times 10^9\ \text{mm}^3$$

Resultant of biaxial moments,

$$M_u = (M_{ux}^2 + M_{uy}^2)^{1/2}$$

$$= (6500^2 + 7400^2)^{1/2}$$

$$= 9850 \text{ KNm.}$$

$$M_u/f_{ck} Z = 9850 \times 10^6/(20 \times 1.1553 \times 10^9)$$

$$= 0.426$$

Refer Chart A1.36 corresponding to $d'/D = 0.012$ and $D/T = 15$.

Point P_3 gives the value of pf_y/f_{ck} corresponding to $M_u/f_{ck} Z = 0.426$ and $P_u/f_{ck} A_g = 0.50$ as follows :

$$PC = 100\, pf_y/f_{ck} = 36$$

$$\therefore A_s = 36 \times \frac{20}{415} \times \frac{1759292}{100} = 30523 \text{ mm}^2$$

Area of steel could be determined more accurately by linear interpolation of areas of steel obtained from charts for $d'/D = 0.012$ and 0.02.

Provide 50 percent steel on each face as per the optimum reinforcement criterion.

$\therefore$ Steel area on each face = $30523/2 = 15262 \text{ mm}^2$

Provide 49-20 ⌀ bars equispaced on each face ($A_s = 15386 \text{ mm}^2$) as shown in Fig. 4.10(a).

Minimum spacing of bars on inner face $= (2600 + 2 \times 40) \times \pi/49$

$= 171.83 \text{ mm} > 3d$ o.k.

Maximum spacing of bars on outer face $= (3000 - 2 \times 40) \times \pi/49$

$= 187.21 \text{ mm} < 300 \text{ mm}$ o.k.

4.5.3 HEXAGONAL SECTION

Design the reinforcement for a hollow hexagonal reinforced concrete short column having overall depth of 4000 mm, wall thickness of 200 mm and subjected to ultimate axial load of 19750

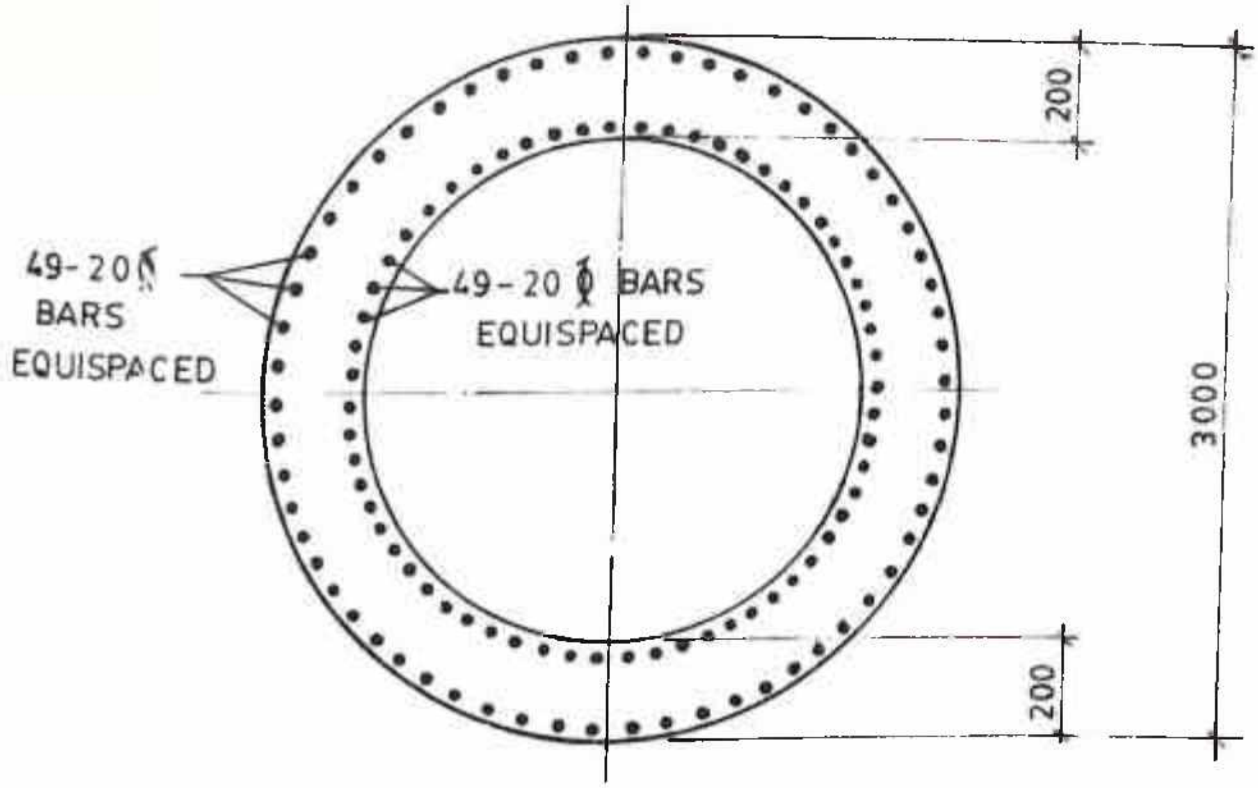

(a) CIRCULAR HOLLOW COLUMN

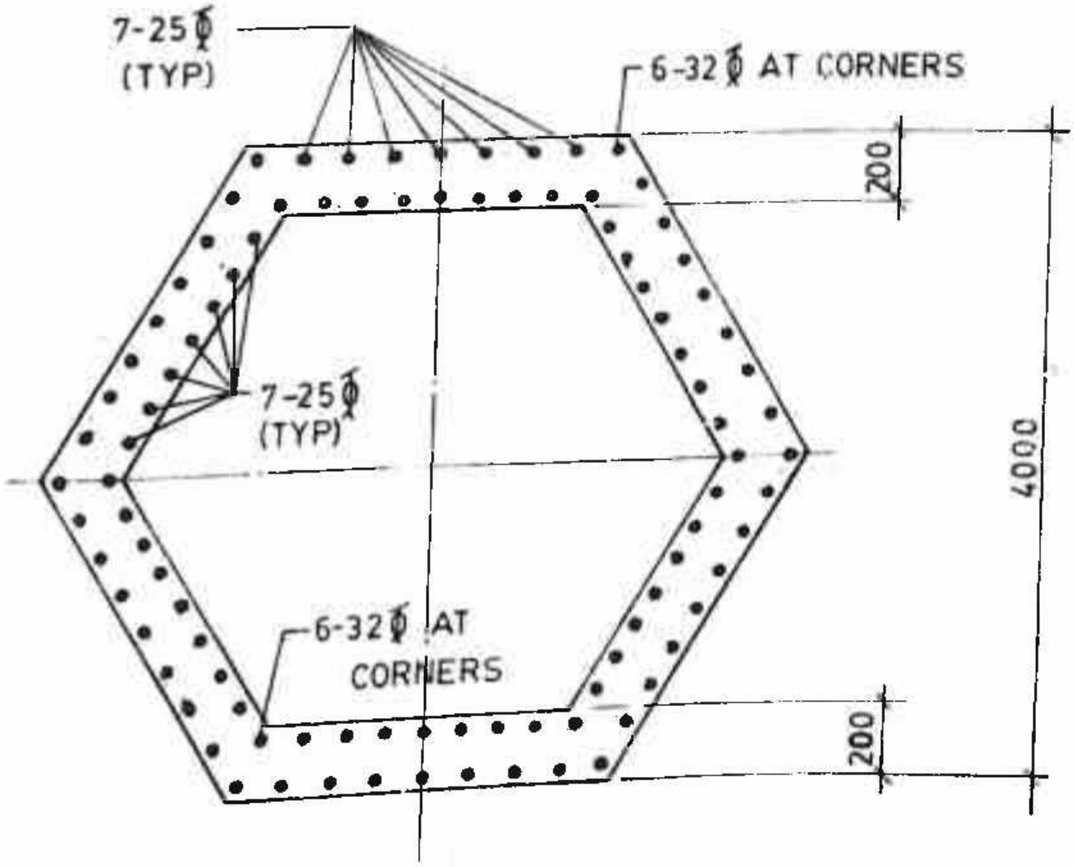

(b) HEXAGONAL HOLLOW COLUMN

Fig.4.10 DESIGN EXAMPLES OF HOLLOW RC COLUMNS

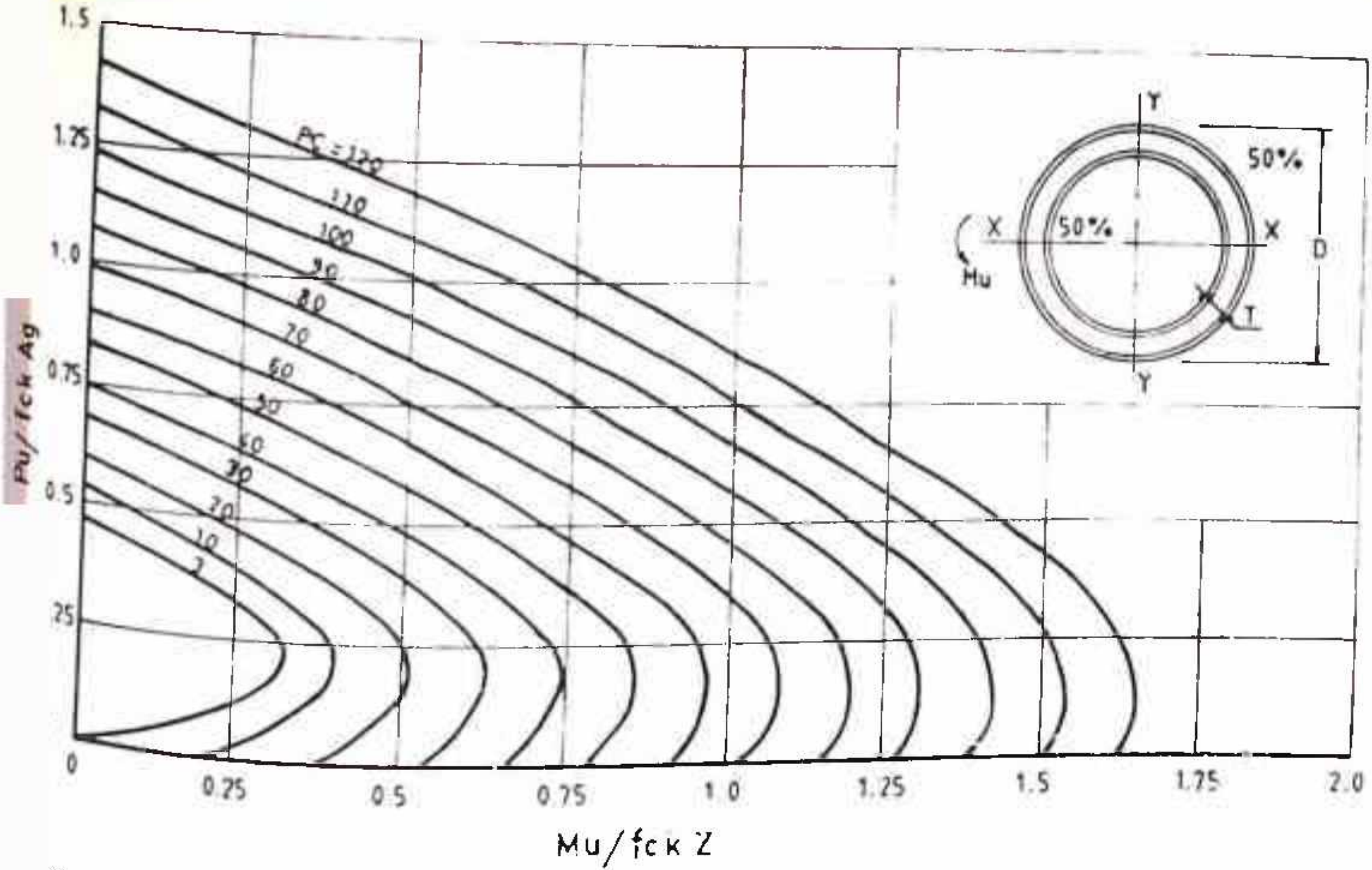

CHART A1·35 DESIGN CHART FOR CIRCULAR HOLLOW COLUMNS

d′/D = 0.012 ; D/T = 10

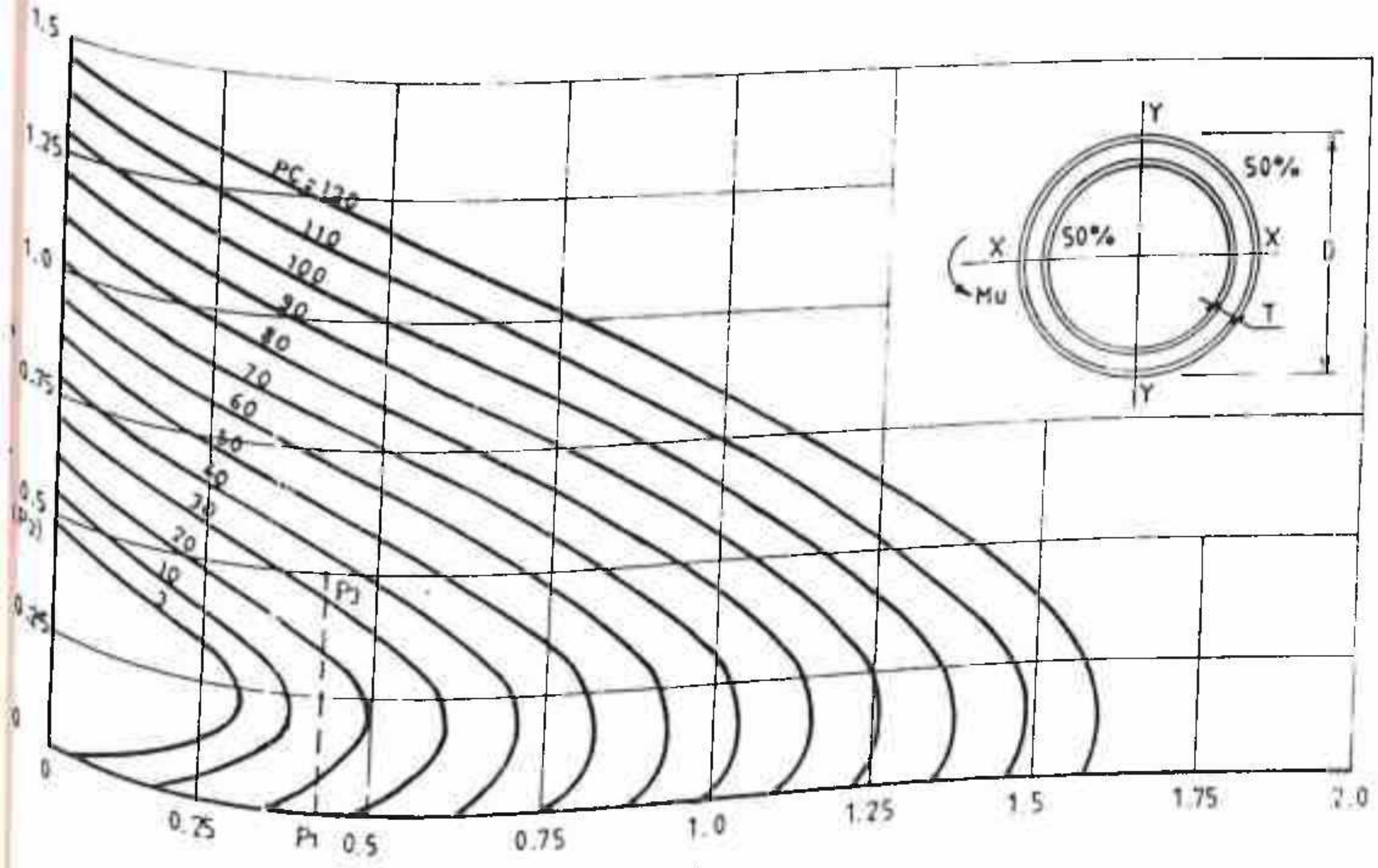

CHART A1·36 DESIGN CHART FOR CIRCULAR HOLLOW COLUMNS

d′/D = 0.012 ; D/T =15

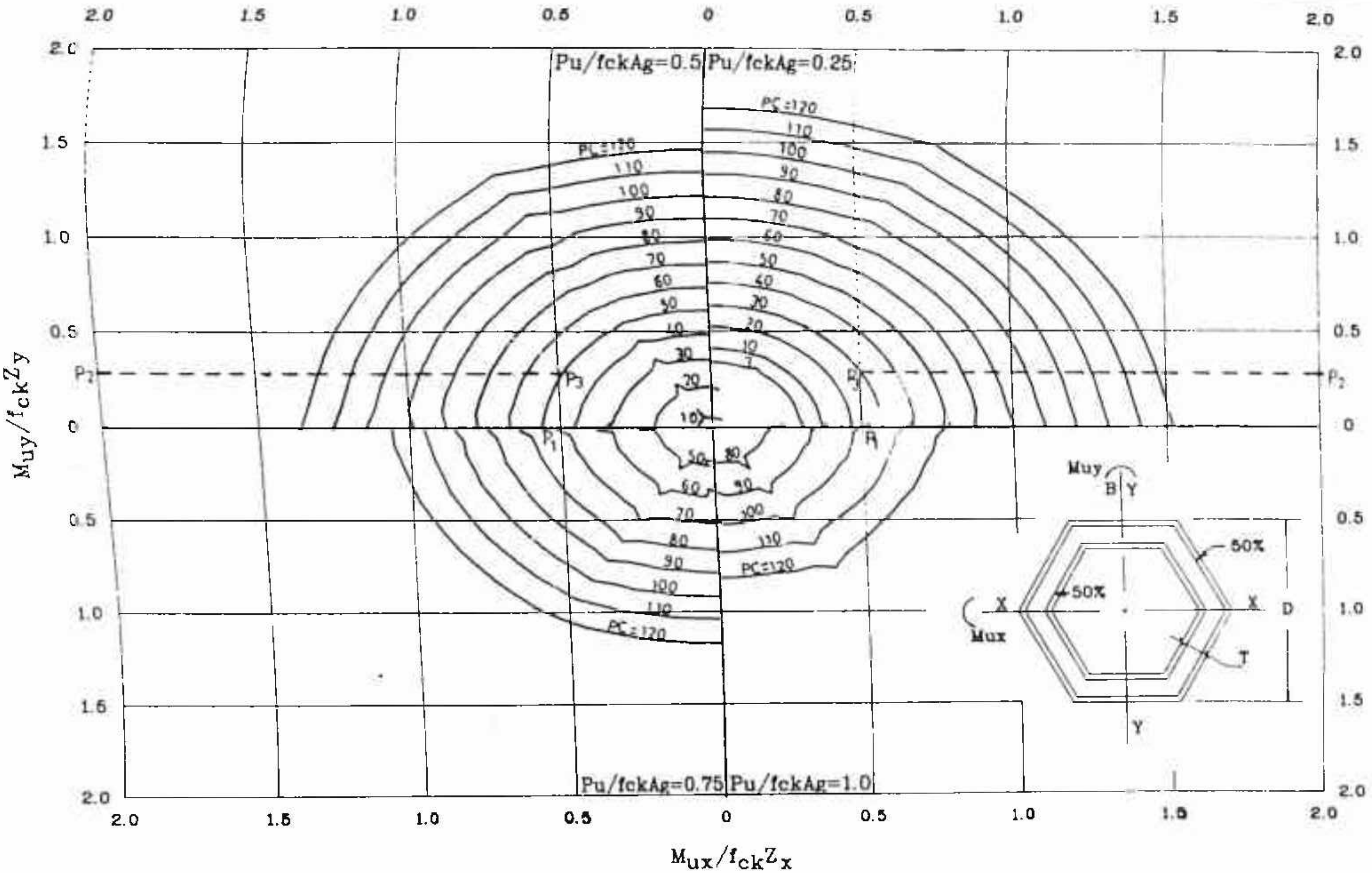

CHART A1·42 DESIGN CHART FOR HEXAGONAL HOLLOW COLUMNS

$d'/D=0.012$; $D/T=20$

KN and ultimate bending moments of 26500 KNm and 12000 KNm about X and Y axes respectively. The effective cover to main reinforcement is 50 mm. The grades of concrete and steel are M.20 and Fe415 respectively.

Solution :

Cross-sectional details of the column are shown in Fig. 10(b).

Compute,

$$d'/D = 50/1000 = 0.0125 \simeq 0.012$$

$$D/T = 1000/200 = 20$$

$$A_g = 0.866025 \times [\ 1000^2 - 2 \times 200^2)\ ]$$

$$= 2632716\ \text{mm}^2$$

$$P_u/f_{ck}A_g = 19750 \times 10^3/(20 \times 2632716)$$

$$= 0.375$$

$$Z_x = 2.6456 \times 10^9\ \text{mm}^3$$

$$Z_y = 2.2912 \times 10^9\ \text{mm}^3$$

$$M_{ux}/f_{ck}Z_x = 26500 \times 10^6/(20 \times 2.6456 \times 10^9)$$

$$= 0.50$$

$$M_{uy}/f_{ck}Z_y = 12000 \times 10^6/(20 \times 2.2912 \times 10^9)$$

$$= 0.262$$

Refer Chart A1.42 corresponding to d'/D = 0.012 and D/T = 20. For $P_u/f_{ck}A_g = 0.375$, the area of steel can be determined by interpolating from the area of steel obtained for $p_u/f_{ck}A_g$ equal to 0.25 and 0.5.

The interaction curves for $P_u/f_{ck}A_g$ = 0.25 and 0.50 are in the first and second quadrants respectively. For the above computed values of M_{ux} and M_{uy}, the areas of steel for $P_u/f_{ck}A_g$ = 0.25 and 0.5 are determined as follows:

For $P_u/f_{ck}A_g$ equal to 0.25, pf_y/f_{ck} = 30

For $P_u/f_{ck}A_g$ equal to 0.50, pf_y/f_{ck} = 50

∴ Area of steel for $P_u/f_{ck}A_g$ equal to 0.375,

$pf_y/f_{ck}A_g$ = (30 + 50)/2 = 40

$$\therefore A_s = 40 \times \frac{20}{415} \times \frac{2632716}{100} = 50751\ mm^2$$

Provide 50 percent steel on each face as per basic assumption.

∴ Steel on each face = 50751/2 = 25376 mm^2

Provide 6-32 ⌀ (at corners) + 42-25 ⌀ (7 x 6) on each face as shown in Fig. 4.10(b).

A_s = 25404 mm^2 > 25376 o.k.

4.6 CONCLUSIONS

The proposed optimum reinforcement detailing evolved for a wide range of geometry of hollow rectangular, circular and hexagonal shaped hollow column sections without opening facilitate their optimum design. The design charts presented are simple and useful to the designer.

Reinforcement pattern has no bearing on the load and moment carrying capacity of hollow circular and hexagonal columns, as long as the number of bars is at least 12 in each layer and are axisymmetrically placed. Polygonal shaped hollow column sections having any number of equal faces more than six can be designed using the interaction curves of circular columns.

CHAPTER 5 : INTERACTION CURVES FOR HOLLOW RC COLUMNS WITH LARGE OPENING

5.1 GENERAL

Due to the very nature of their application, hollow columns may have openings to facilitate access to workmen for maintenance of service lines. Rectangular hollow column may be used as lift enclosure in multistoreyed buildings, in which case it will have door openings at every floor level. It is therefore important to study the stress conditions and behaviour of the wall elements around such openings to be able to effectively reinforce those zones to avoid failure. The behaviour of the wall elements around openings can best be studied by finite element analysis. Suitable finite element models have been prepared for various sections viz rectangular, circular etc. and the effects of axial load as well as bending moments have been studied. Conclusions have been drawn, based on the exhaustive studies, to help the designer take necessary precautions while designing hollow column sections with opening. Further, optimization of reinforcement detailing and preparation of design charts for cee shaped columns have been carried out as in the case of hollow columns without opening.

5.2 FINITE ELEMENT METHOD

In engineering, the solution of stress and strain distribution in a continuum is achieved by a number of interconnections between any finite element isolated by some imaginary boundaries and the neighbouring elements. Hence, the geometrically complex domain of the problem is represented as a collection of geometrically simple subdomains, called finite elements. The elements are assumed to be interconnected at a discrete number of nodal points situated on their boundaries. The displacements of these nodal points will be the basic unknown parameters of the problem. The number and the location of the nodes in an element depend on the geometry of the element and the degree of approximation desired. A function (or functions) is chosen to define uniquely the state of displacement within each element in terms of its nodal displacement. The displacement interpolation functions now define uniquely the state of strain within an element in terms of nodal displacements. These strains together with any initial strains and the elastic properties of the material define the state of stress throughout the element. A system of forces concentrated at the nodes and equillibriating the boundary stresses and any distributed loads is determined, resulting in a stiffness relationship. Finite element stresses can be calculated at any desired location by simply establishing the strain displacement transformation matrix for the point under consideration.

The source of error in a finite element solution are due to (a) approximation of the domain and (b) numerical computations (for example, numerical integration and round-off errors). The accuracy and convevgence of the finite element solution depend on the type and size of element used in a mesh.

After trial investigations of some typical finite elements available in literature, the plate finite element was chosen for its adaptability to model plate structures like slabs, walls, diaphragms etc. The plate element, the formulation of which includes consideration of both in-plane (membrane) and out-of-plane (plate) stiffnesses, was found to be most appropriate. The element may be either triangular or quadrilateral, depending on whether three or four nodes are specified. If four nodes are defined, they do not have to lie on a common plane, i.e. a warped surface can be described by the element, such as a segment of a circular hollow column. The program automatically generates a fifth node at the center of the element. This fifth node is derived from the element stiffness, before it is added into the structure stiffness.

The force output for an element consists of three membrane stress resultants and three bending moments, at the element center node. The membrane forces F_x, F_y and F_{xy}, bending moments M_x, M_y and M_{xy} as well as the principal stresses and the maximum shear stress alongwith the orientation of the principal plane (Angle) have been computed. The forces and moments are given in the local coordinate system. The coordinate system is dependent upon the shape of the element and the manner in which the element nodes are numbered. This is explained in Fig. 5.1 wherein the precise orientation of local coordinates can be determined as follows :

a) Designate the midpoints of the four (or three) element edges IJ, JK, KL, LI by M, N, O, P respectively.

b) The vector pointing from P to N is defined to be the local X-axis. In a triangular element this is always parellel to IJ.

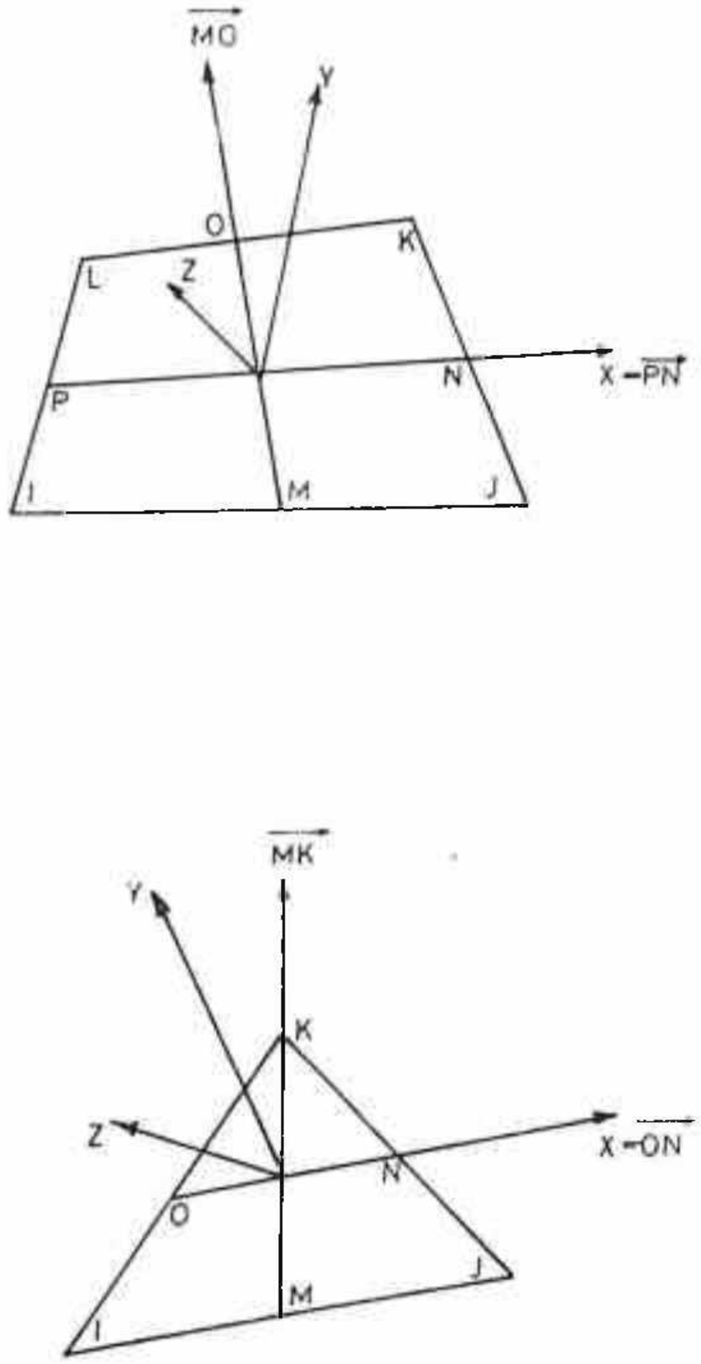

FIG. 5.1 FINITE ELEMENT COORDINATE SYSTEM

c) The vector cross product of vectors PX and MO (for a triangale, OX and MK) defines the local Z-axiz, i.e., $Z = PX \times MO$.

d) The vector corss product of vectors Z and X defines the local Y-axis, i.e. $Y = Z \times X$.

The sign convention of output force and moment resultants is illustrated in Fig. 5.2.

5.3 FINITE ELEMENT MODEL

Studies have been made on finite element models of hollow rectangular and circular column sections. It has been seen earlier that the interaction curves of hollow hexagonal columns of large girth tend to be similar to those of hollow circular columns having similar dimensions. As such separate study of hexagonal hollow column section has not been made.

The accuracy of results in a finite element analysis depends upon a judicious selection of the size and number of finite elements in a simulatory model. Normally, the smaller the size of finite element, greater is the accuracy of results. Before arriving at the final simulatory model, four trial models have been run on the computer with increasing number of elements (i.e. 48,108,192 and 240) and their results examined to see whether the stress values converge. Fig. 5.3 shows a plot of hoop stress in the wall elements at mid-height of the hollow column. The hoop stress at mid-height under purely axial load is theoretically expected to be zero. It may be seen that the hoop stress value

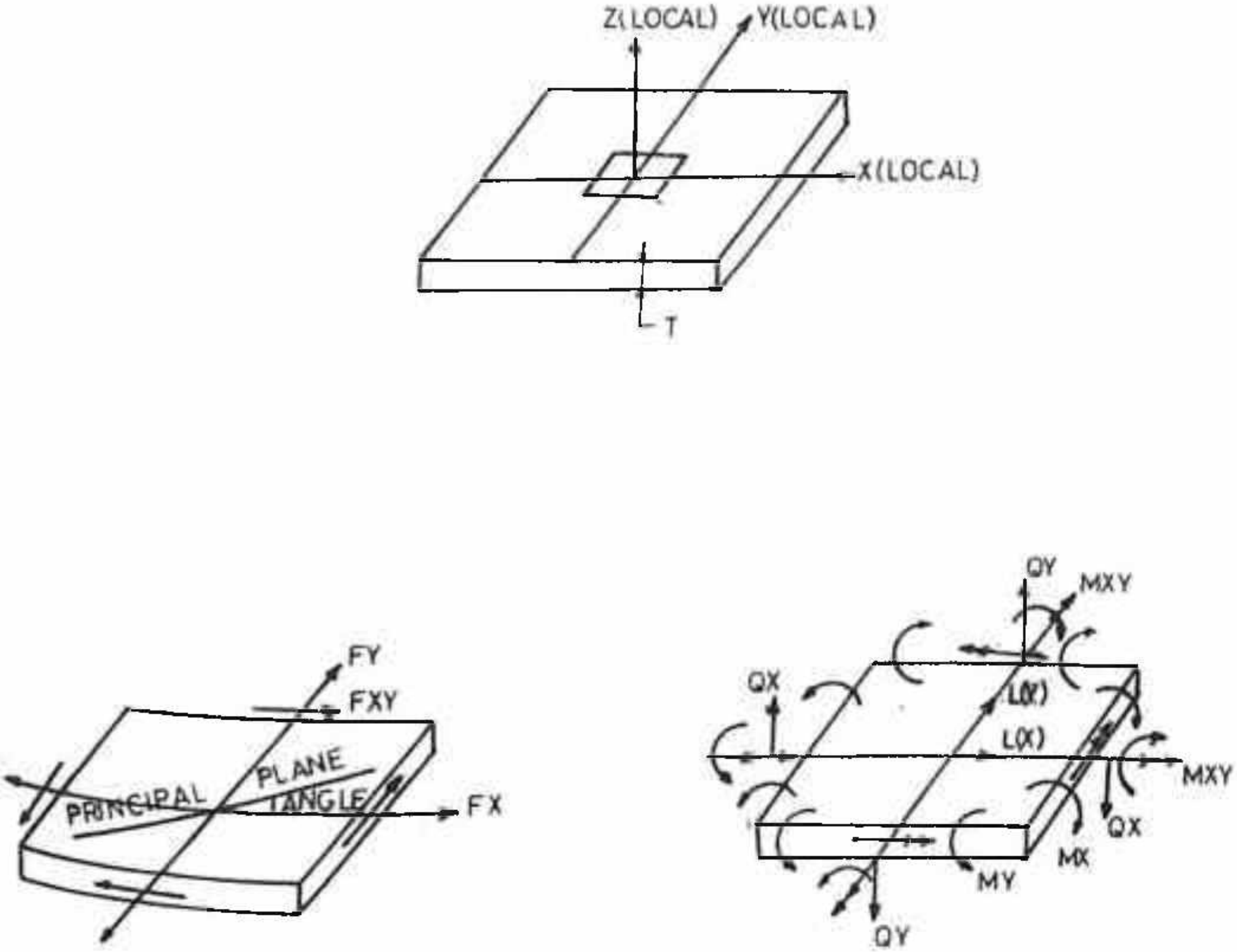

FIG. 5·2 ELEMENT FORCE OUTPUT

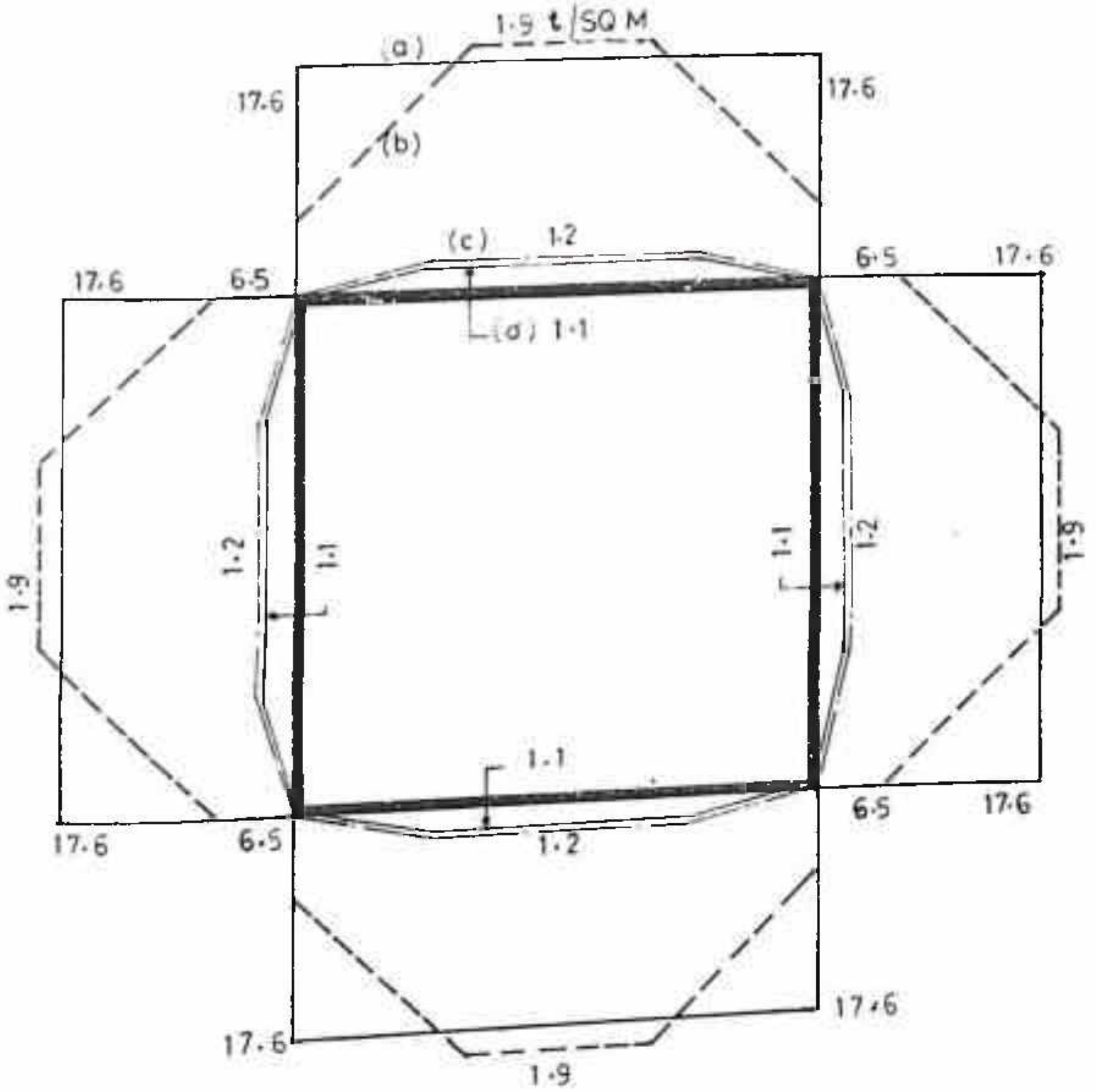

HOOP STRESS IN RECTANGULAR HOLLOW COLUMN SECTION

a) 48 ELEMENT MODEL
b) 108 ELEMENT MODEL
c) 192 ELEMENT MODEL
d) 240 ELEMENT MODEL

FIG. 5.3 CONVERGENCE OF FINTE ELEMENT MODEL in the 192 element model converges to zero (i.e. 1.2 KN/sqm), whereas in the 48 element model its value is much higher at 17.6 KN/Sqm. In the 240 element model the hoop stress value was very close to that in the 192 element model (i.e. 1.1 KN/Sqm) indicating convergence. However, the computer time for the analysis was three times more as compared to the 192 element model. Therefore the 192 element model can be adopted for fairly accurate results.

For each column section two identical finite element models have been prepared - one without opening and the other with an opening near the base. An opening near the base is the most likely proposition from practical considerations. Fig. 5.4 shows the finite element model of hollow rectangular column having a 2 m x 2 m cross-section and a total height of 6.0 m. The wall thickness is 200 mm. Size of each finite element is 500 mm x 500 mm. There are total 192 elements in the model, 16 at each layer. The column is assumed to be fixed at base and free at the top. An opening of size 1.0 m (W) and 2.0 m (H) has been assumed at the base in one of the two similar models. Fig. 5.5 shows the finite element model of hollow circular column having a diameter of 2.55 m and a wall thickness of 200 mm. The height of the column is 6.0 m, and it is assumed to be fixed at base and free at top. There are total 192 elements of size 500 mm x 500 mm in the model, 16 at each layer. An opening of size 1.0 m (W) and 2.0 m (H) has been assumed at the base in one of the two similar models.

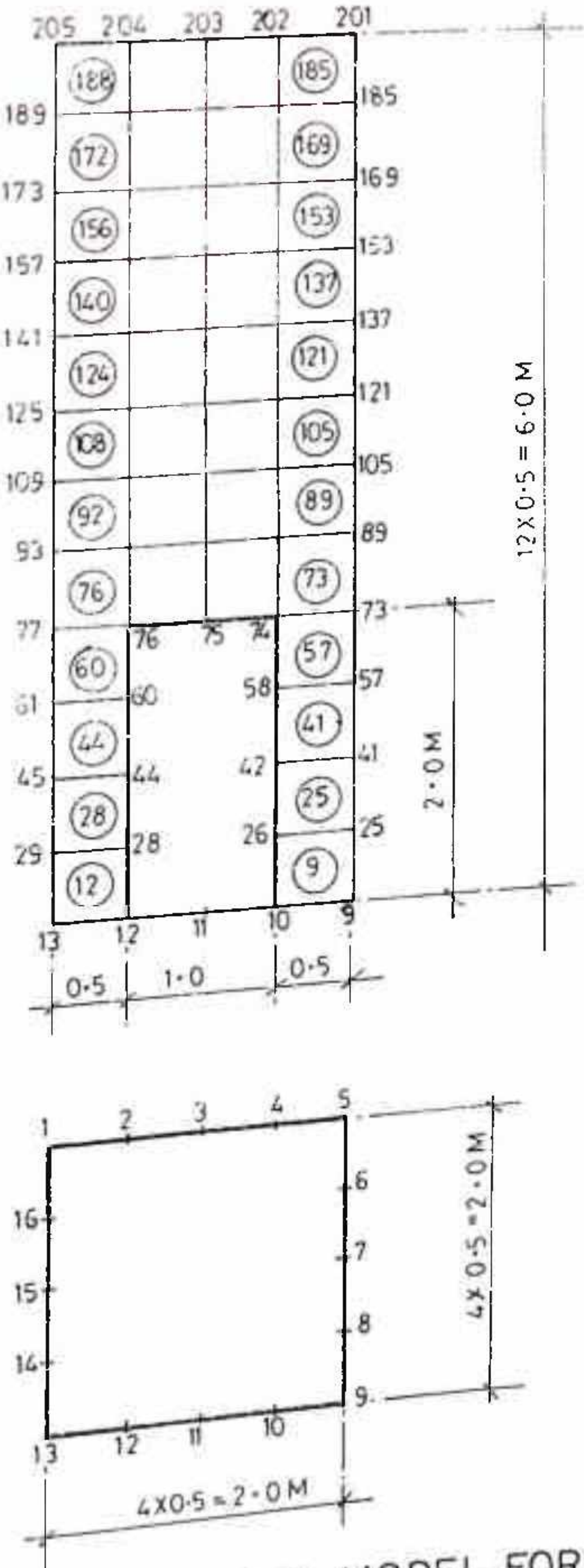

Fig 5·4 FINITE ELEMENT MODEL FOR RECTANGULAR SECTION

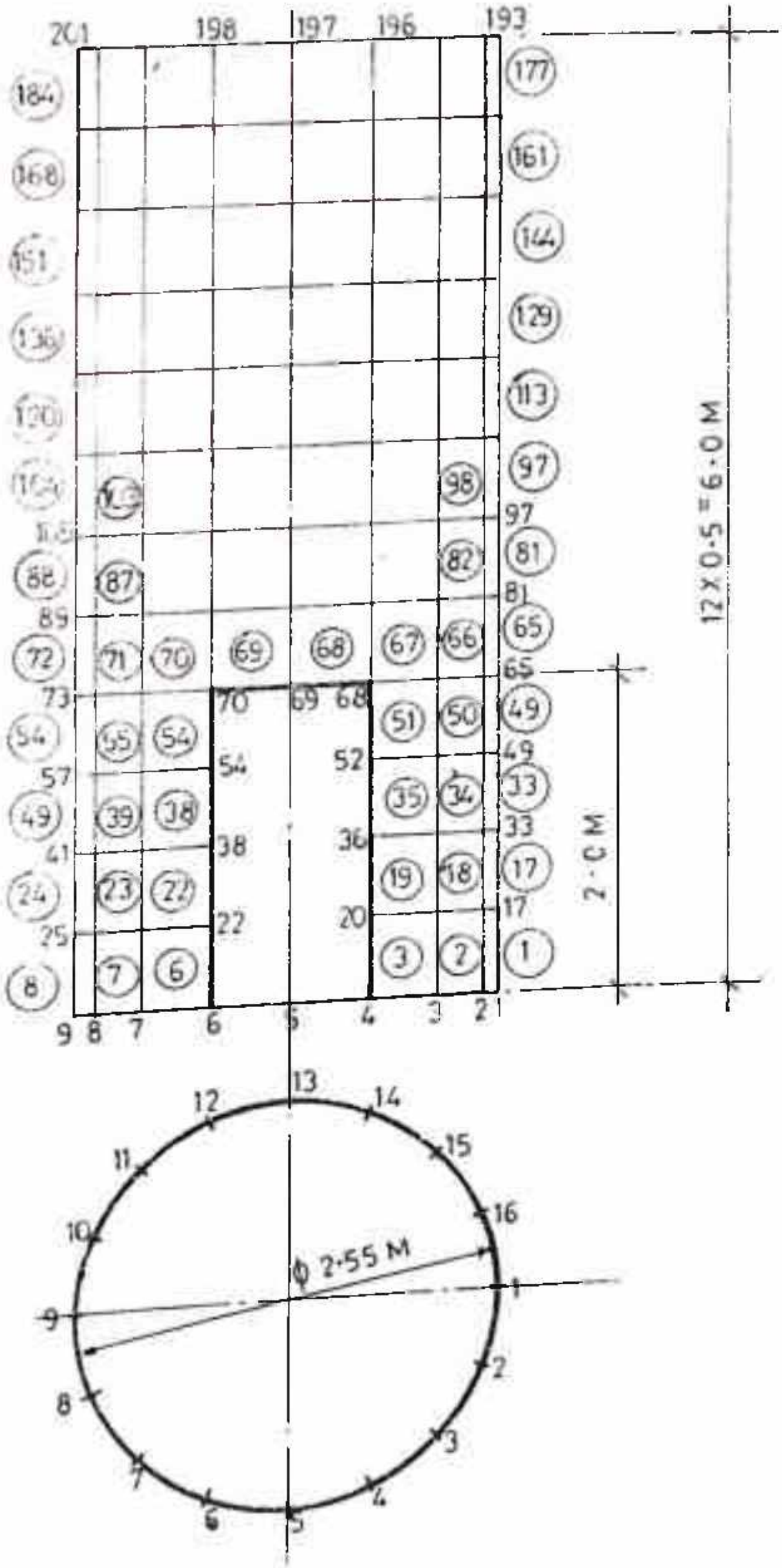

Fig 5•5 FINITE ELEMENT MODEL FOR CIRCULAR SECTION

5.4 FINITE ELEMENT ANALYSIS RESULTS

Finite element analysis of the hollow column models shown in Figs. 5.4 and 5.5 have been carried out for similar loading pattern. The analyses have been done for joint displacements and element forces under various loading conditions.

Three different load cases have been considered for the analysis of all the four finite element models - two for rectangular and two for circular hollow columns.

The first load case consists of a total axial load of 8000 KN applied at the top of the column acting vertically downwards. This is achieved by applying a downward force of 500 KN at each of the 16 joints at the top, viz. joint numbers 193 to 208.

The second load case comprises of 16 joint forces of magnitude 125 KN each acting horizontally at joint numbers 193 to 208 in the global X-direction, i.e. parallel to the plane of opening. This results in a bending moment of 12000 KNm at the base of the column.

The third load case comprises of 16 joint forces of magnitude 125 KN each acting horizonatally at joint numbers 193 to 208 in the global Z-direction, i.e. perpendicular to the plane of opening. This results in a bending moment of 12000 KNm at the base of the column, in a perpendicular plane to that stated above.

Two load combinations viz (Axial + M_z) and (Axial + M_x) have also been called for to study the effect of combined stresses on the column sections. Self weight of the columns has been omitted so that the effect of applied loads alone could be studied.

5.5 OBSERVATIONS ON THE FINITE ELEMENT ANALYSIS RESULTS

Observations on the finite element analysis results of hollow rectangular and circular columns without and with opening are discussed below.

5.5.1 HOLLOW RECTANGULAR COLUMN WITHOUT OPENING

a) The vertical displacement under purely axial load is found to be zero at the base joint numbers 1 to 16 (Fig. 5.4) and gradually increases to a value of 1.22 mm at the top of the column i.e. joints 193 to 208. This shows that the compressive strain is maximum near the loading point and then gradually diminishes as we move closer to the support joints.

b) At 0.16 times the height of column (joints 17 to 48), the vertical strain is slightly higher at the four corners indicating stress concentration at those locations.

c) Above 0.25 times the height of column (joints 49,50 etc), the vertical strain is uniform, indicating that the stress is uniform throughout the section.

d) Displacement and stresses are uniform at a given level (except in a small portion near the base, which is primarily due to boundary restraints), indicating that plain sections remain plain under the applied loads. This is in agreement with the basic assumption of column theory.

e) Vertical element stresses are slightly higher in the corner elements as compared to the inner elements. This, in conformity with (b) above indicates a slight tendency of stress concentration near the corners.

f) Vertical support reaction values are higher at the four corners, again indicating stress concentration, as displayed in Fig. 5.6(a).

g) While evolving the optimum reinforcement pattern for hollow rectangular columns in section 4.3 it was found that concentration of reinforcement steel at the corners enhances the efficiency of a given column section. The stress distribution in the hollow column section as stated in (b) and (e) above are in total agreement with this finding.

h) Study of hoop stress in the various elements under purely axial load reveals the following :

(i) Considerable hoop stress is noticed in the first layer at base. For example, if the axial stress is of the order of 5000 KN/Sqm, the hoop stress is 980.2 KN/Sqm. This increases to 1323.3 KN/Sqm (i.e. 35 percent increase) in the corner elements.

(ii) The hoop stress gradually approaches zero as we move up, finally disapperaring at mid-height.

(iii) The above observations point at the requirement of closely spaced horizontal reinforcement i.e. binders or

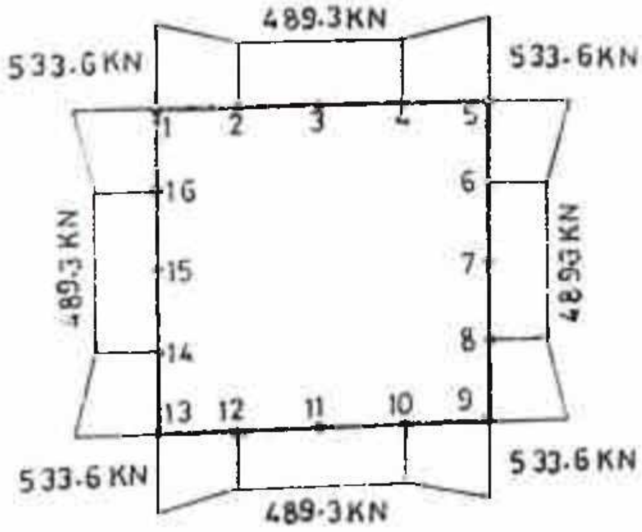

(a) VERTICAL SUPPORT REACTIONS WITHOUT OPENING

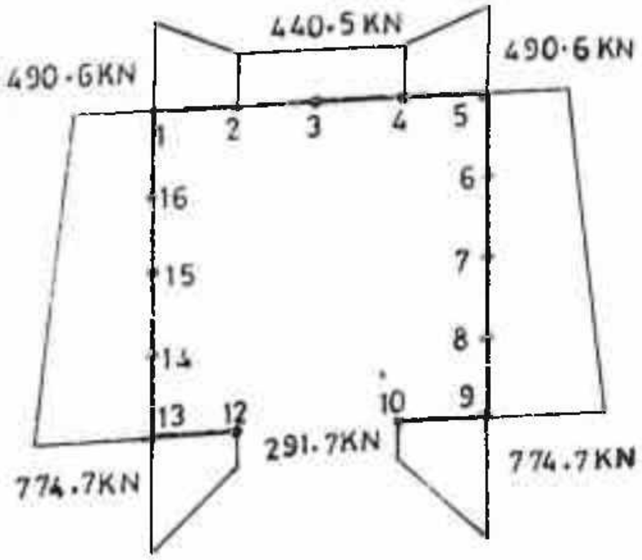

(b) VERTICAL SUPPORT REACTIONS WITH OPENING

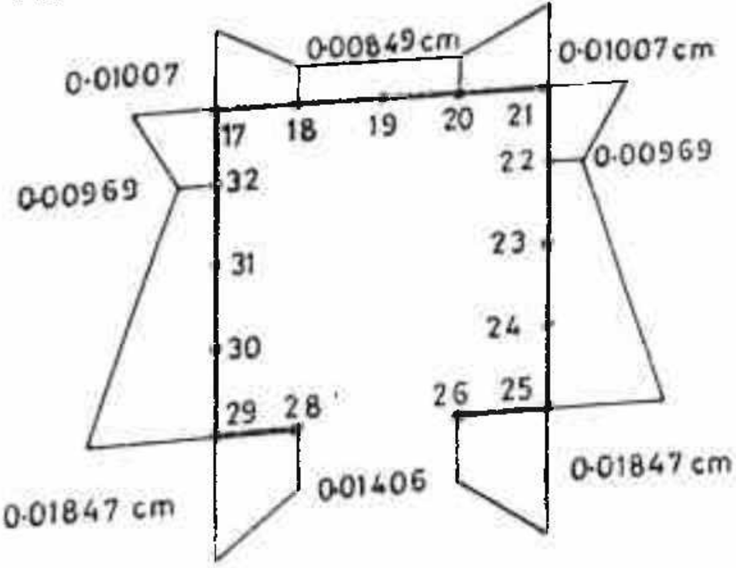

(c) AXIAL STRAINS WITH OPENING

Fig 5.6 FINITE ELEMENT ANALYSIS RESULTS

hoops near the support - or in a more generalised term, at all junctions of beam and column.

(iv) The amount of reinforcement can also be worked out in the ratio of hoop stress to axial stress, which is coming out to be 25 percent of the main reinforcement.

Under combined action of axial load and bending moments, the observations are routine and in conformity with the general theories of strength of materials.

5.5.2 HOLLOW RECTANGULAR COLUMN WITH OPENING

Fig. 5.6(c) shows the strain distribution under purely vertical load 0.25 times the height of opening (joints 17 to 32) of a rectangular hollow column section with opening. The following observations are noteworthy:

a) Maximum strain occurs at corner joints 25 and 29 located close to the opening.

b) Strain reduces at edge joints 26 and 28.

c) Same pattern follows upto the fourth layer i.e. joints 49 to 64.

d) At the top edge of opening, i.e. joints 65 to 80, the strain gradually increases towards the opening and is maximum at joint 75 which is located at the middle of the opening. This indicates gradual sharing of the load by the entire section. Maximum vertical displacement at joint 75 is due to bridging action of the elements located justabove the opening.

e) The above pattern follows upto the top. However the amount of vertical displacement at the middle joint gradually reduces as we move upwards due to the increase in stiffness of the bridging beam.

Vertical load reaction values also show a tendency of stress concentration at the corners close to the opening. Fig. 5.6(b) shows the distribution of vertical reaction at the base joints 1 to 16 under purely axial load.

It may be noted that whereas the percentage reduction in cross-sectional area of one side is 50 percent, the corresponding increase of axial stress at the corner joints 9 and 13 is 54.94 percent.

The above observation points at a rough thumb rule, that reinforcement steel that would have normally been provided in the cut-off portion should be concentrated at the two adjacent corners. This would be in addition to the steel normally provided at the corners as per design. This thumb rule will however hold good for an isolated case of hollow rectangular column under purely axial loading.

Study of hoop stress in the various elements under purely axial load on rectangular hollow reinforced concrete column with opening reveals the following :

a) In the closed wall opposite to the opening (elements 1 to 4) of the bottom-most layer, a pattern similar to that of hollow column without opening is seen. However, the hoop stress values are slightly smaller, i.e. 866.6 KN/Sqm and 1177.2 KN/Sqm respectively.

b) As we move towards the opening, the value of hoop stress, which is compressive, gradually increases from 1260.2 KN/Sqm in element 5 and 16 to 2418.7 KN/Sqm in elements 9 and 12.

c) Thus very heavy lateral reinforcement is required, which works out to almost 50 percent of the maximum main reinforcement at the corners.

d) In the second layer the hoop stress reduces drastically to one-fifth of that in the first layer, becoming insignificant in the third and fourth layers. This is because the column section becomes "open" or cee shaped in this region, obviating the development of hoop stress.

e) In the fifth layer, which is located close to the top of the opening, the hoop stress reappears as tensile stress with a small value of 690.2 KN/Sqm. From the mid-height upwards, it approaches zero.

f) The above indicates that lateral reinforcement to the extent of 15% of the main reinforcement is required in the column wall having an opening, just above the top edge of opening.

Under combined action of axial force and bending moments, heavy concentration of strain and stress has been observed as expected.

However, no general conclusion can be drawn on the basis of this study as there can be innumerable combinations of axial load and bending moments about the two orthogonal axes.

The effect of biaxial bending moments acting alongwith axial load on a cut-off hollow rectangular reinforcement concrete section can be best studied by developing a modified finite element program for cee shaped sections.

5.5.3 HOLLOW CIRCULAR COLUMN

In case of hollow circular column without opening, no stress concentration has been noticed anywhere in the model, unlike rectangular hollow columns.

In case of circular hollow column with opening, findings were similar to those of hollow rectangular columns.

5.6 GEOMETRY OF CEE SHAPED SECTIONS

Hollow columns are expected to be of large girth, therefore a range of values of the depth D has been adopted. A minimum value of 1000 mm in view of the convenience in formwork and a maximum value of 4000 mm from architectural and structural considerations have been considered for the depth of the section. The breadth of the section B has been expressed in terms of the depth-to-breadth (D/B) ratio. Values of D/B ratio equal to 1.0, 1.5, 2.0, 3.0 and 4.0 have been considered from architectural point of view. A minimum value of the thickness of wall, T equal to 100 mm has been adopted from the considerations of reinforcement placement and proper concreting. The maximum value of T may be limited to 500 mm, for beyond this value the advantage of using hollow sections will cease to accrue. A minimum clear cover of 40 mm to the main reinforcement bars is provided where T is more than 200 mm. For T less than or equal to 200 mm a minimum clear cover of 25 mm to the main reinforcement bars may be adopted. The width of opening C is assumed to be 600 mm for sections having D < 1000 mm, For larger sections the value of C is taken as 800 to 1000 mm. The opening is assumed to lie in the larger dimension of the section, i.e. D.

Based on the above, the following range of geometrical parameters have been fixed :

Rectangular Sections

Dimension Range	D/B	D/T	d'/D	C
D < 1000 mm	1.0,1.5	5,10	0.03	600mm
1000 < D < 2500 mm	1.0,1.5,2.0	7.5, 10	0.02,0.03	800mm
2500 < D < 4000 mm	1.5,2.0,3.0,4.0	7.5,10,15	0.012,0.02	1000mm

Circular Sections

Dimension Range	D/T	d'/D	C
D < 1000 mm	5,10	0.03	600 mm
1000 < D < 2500 mm	7.5, 10	0.02,0.03	800 mm
2500 < D < 4000 mm	7.5,10,15	0.012,0.02	1000 mm

5.7 OPTIMUM REINFORCEMENT ARRANGEMENT

RECTANGULAR CEE SECTIONS

Rectangular reinforced concrete sections have been found to be optimally reinforced when about 50% of the total reinforcement steel is concentreated at the four corners having peak stresses under biaxially eccentric loading as discussed in chapter 4. Extensive studies on simulatory finite element models of hollow rectangular columns with opening at the base indicated stress concentration at the four corners as well as at the two edges across the opening. The intensity of stress concentration showed that for cee shaped rectangular column sections also, provision of about 50% steel at the four corners gives the optimum placement. It was also seen that the amount of reinforcemnt steel removed from the cut-off web has to be concentrated at the two edges across the opening to satisfy the stress concentration requirement. This means that the total steel in the two webs has to be the same. Investigation for the effect of different reinforcement pattern on the biaxial moment capacities of cee shaped rectangular column section having a particular geometrical attributes, steel percentage and axial loading has been carried out as shown in Fig. 5.7 to arrive at the optimum reinforcement pattern. The results are in conformity with the finite element investigation as stated above.

Based on the above, the optimum reinforcement pattern for hollow rectangular cee shaped reinforced concrete column is shown in Fig. 5.8 .

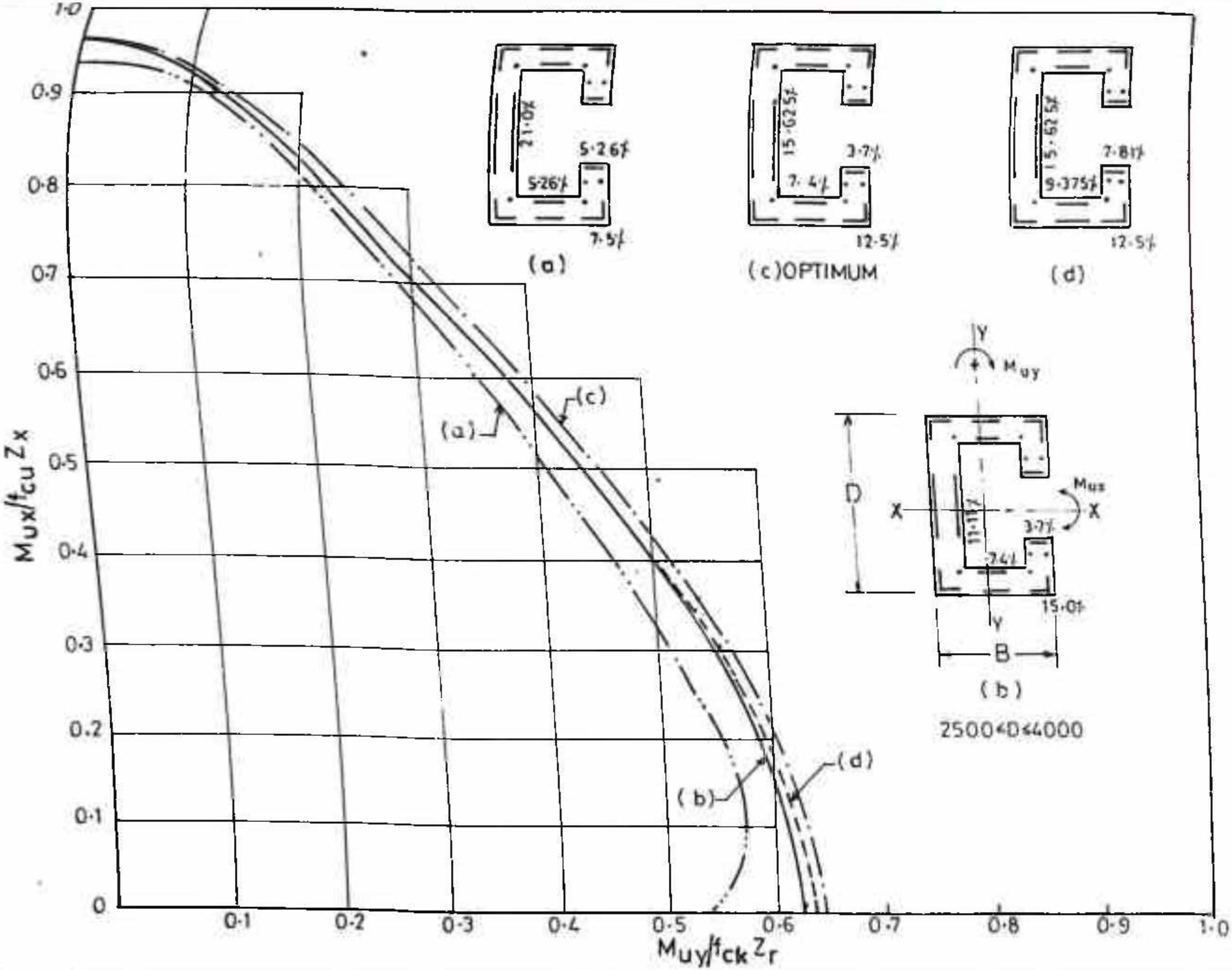

Fig. 5.7 INTERACTION CURVES FOR DIFFERENT TYPES OF REINFORCEMENT DETAILING FOR RECTANGULAR CEE SHAPED COLUMN SECTION

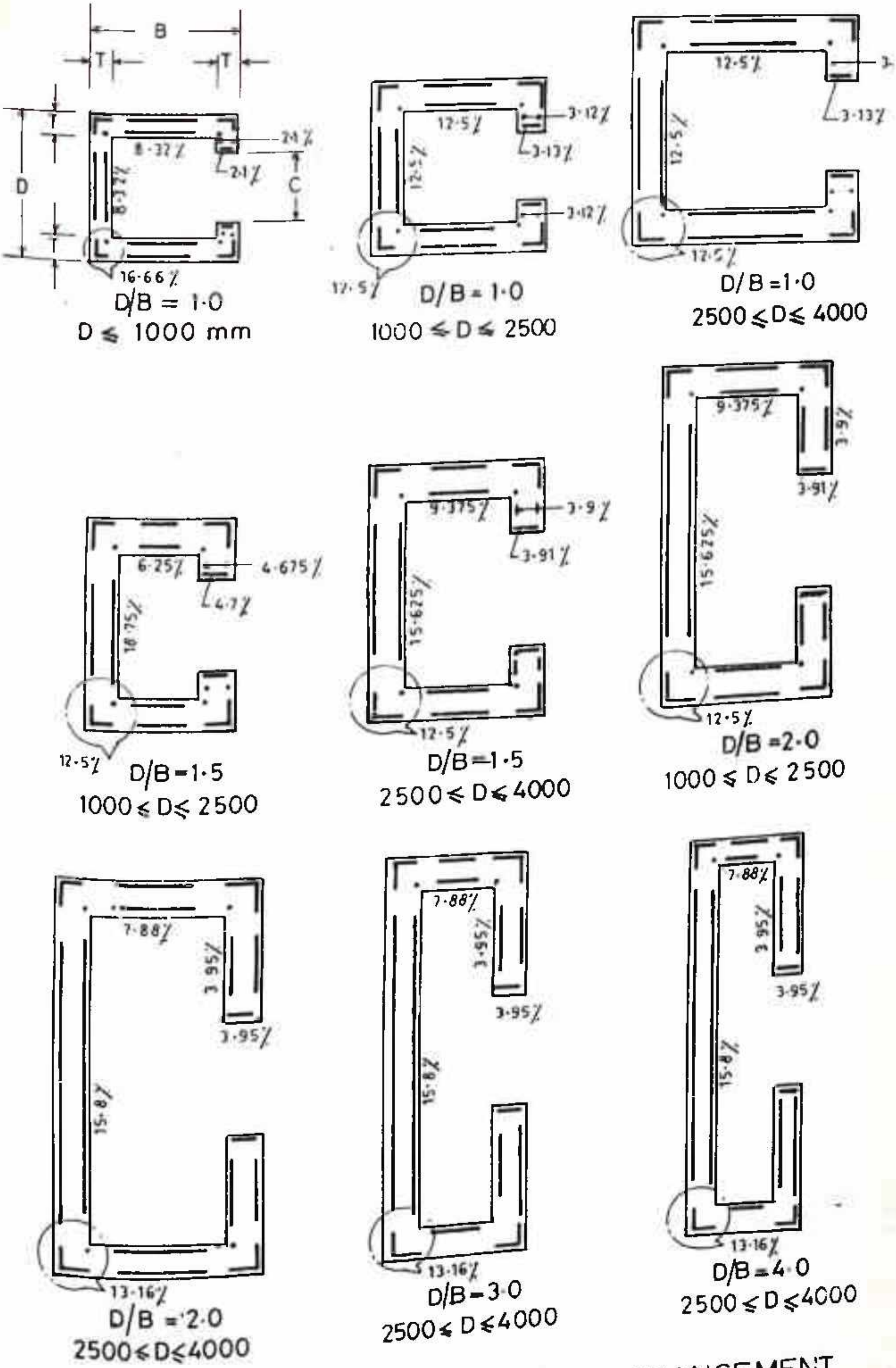

D/B = 1·0
D ≤ 1000 mm

D/B = 1·0
1000 ≤ D ≤ 2500

D/B = 1·0
2500 ≤ D ≤ 4000

D/B = 1·5
1000 ≤ D ≤ 2500

D/B = 1·5
2500 ≤ D ≤ 4000

D/B = 2·0
1000 ≤ D ≤ 2500

D/B = 2·0
2500 ≤ D ≤ 4000

D/B = 3·0
2500 ≤ D ≤ 4000

D/B = 4·0
2500 ≤ D ≤ 4000

Fig.5·8 OPTIMUM REINFORCEMENT ARRANGEMENT FOR RECTANGULAR CEE COLUMNS

CIRCULAR CEE SECTIONS

Circular hollow reinforced concrete columns have been found to be optimally reinforced when 12 or more number of bars are placed equispaced on each of the inner and outer faces, as discussed in Chapter 4. Extensive studies on simulatory finite element models of hollow circular columns with opening at base indicated stress concentration at the two edges across the opening. It was also seen that the amount of reinforcement steel removed from the open portion has to be concentrated at the two edges across the opening to satisfy the stress concentration requirement. Study for optimum reinforcement pattern as shown in Fig. 5.9 was also found to be in conformity with the finite element investigations as in the case of rectangular cee shaped columns.

Based on the above, the optimum reinforcement pattern for circular cee shaped reinforced concrete column sections is shown in Fig. 5.10.

5.8 INTERACTION CURVES

The interaction curves for various geometry and reinforcement detailing have been obtained by plotting biaxial moments for different values of areas of steel and a particular value of axial force. For wider applicability of the design curves, the axial force P_u, biaxial moments M_{ux} and M_{uy} and area of steel A_s have been expressed in non-dimensional form as $P_u/f_{ck} A_g$, $M_{ux}/f_{ck} Z_x$, $M_{uy}/f_{ck} Z_{yl}$, $M_{uy}/f_{ck} Z_{yr}$ and $100\ A_s f_y/f_{ck} A_g$ respectively.

As the cee shaped sections are symmetrical about the X-X axis,

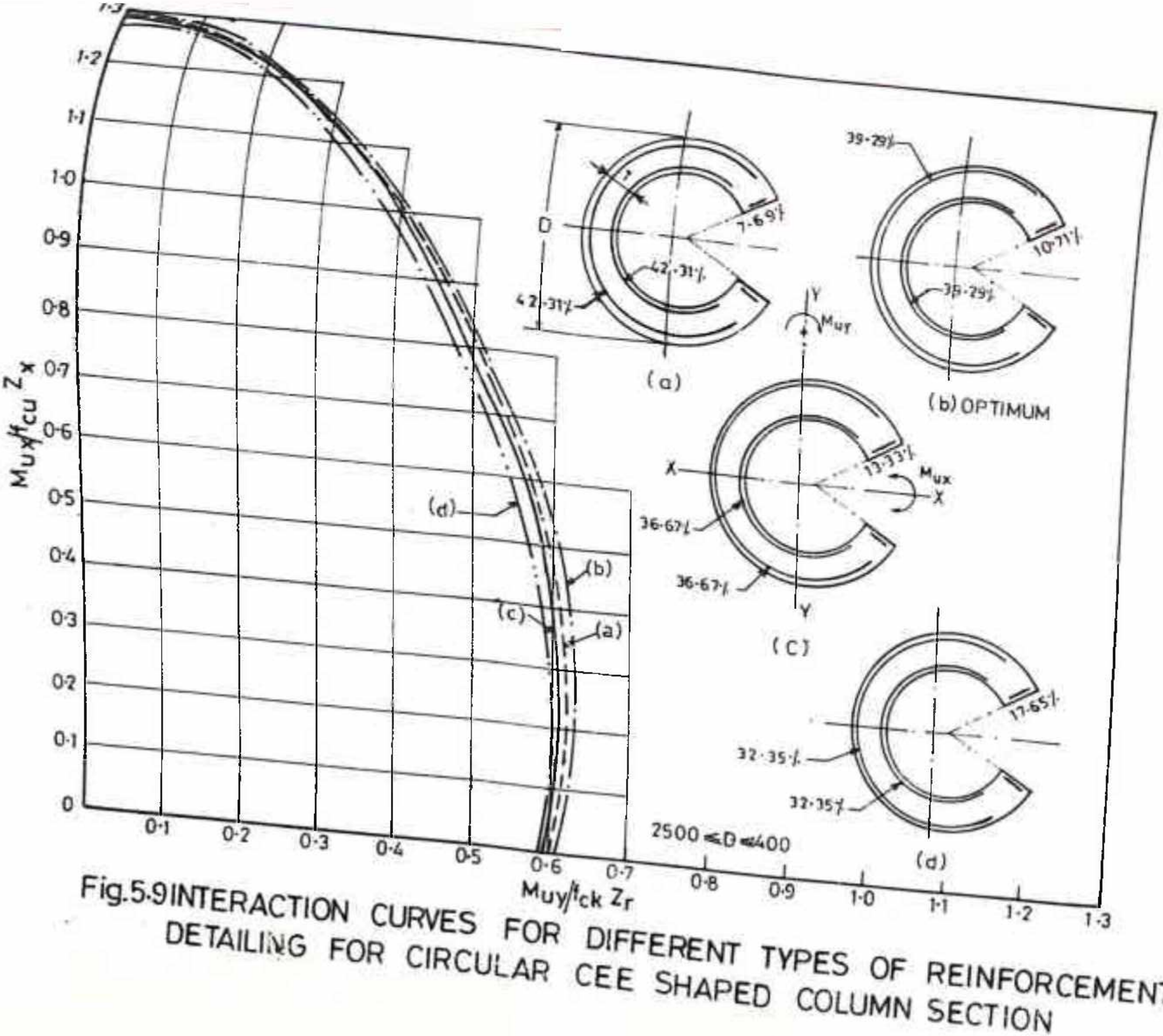

Fig.5.9 INTERACTION CURVES FOR DIFFERENT TYPES OF REINFORCEMENT DETAILING FOR CIRCULAR CEE SHAPED COLUMN SECTION

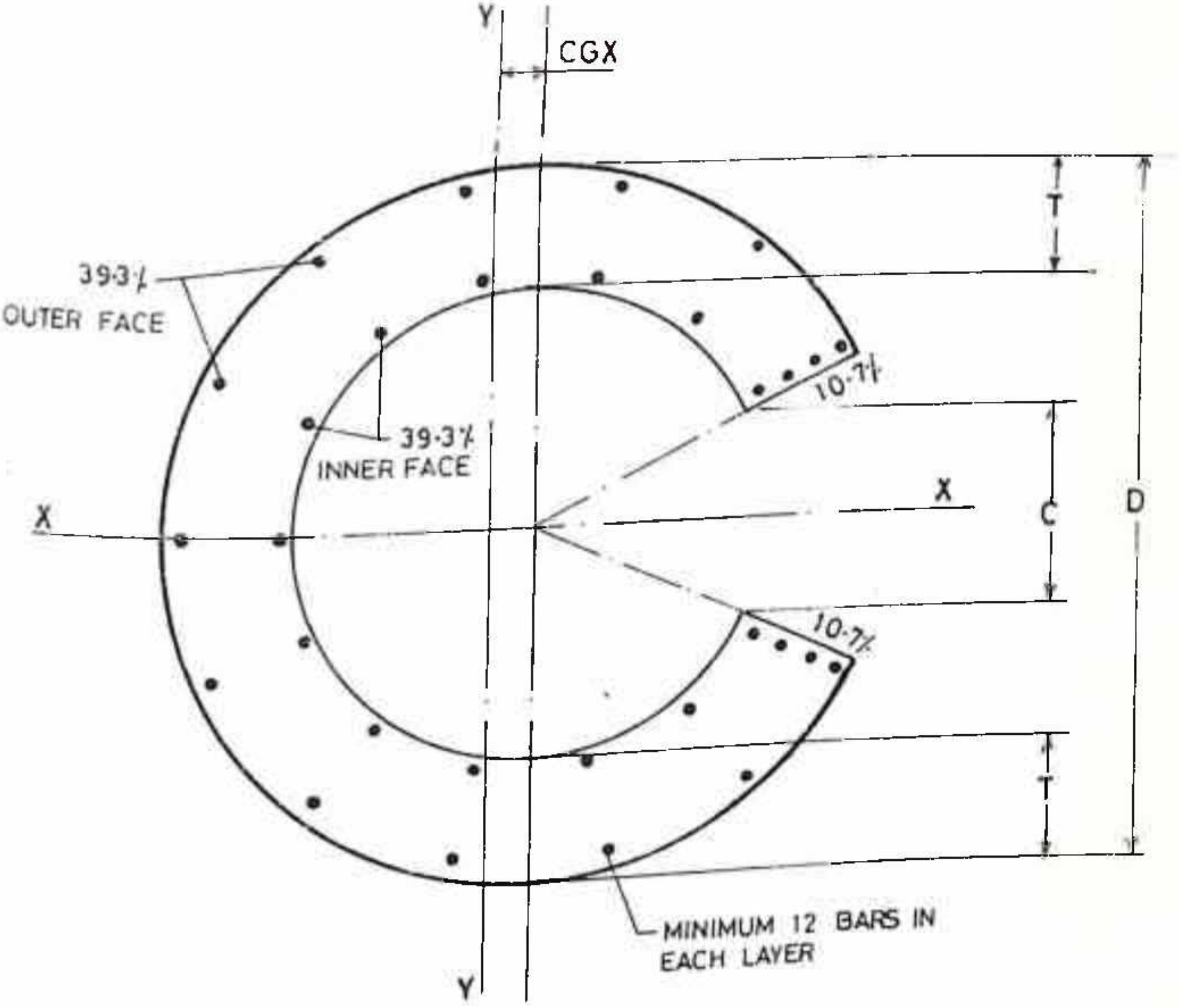

Fig. 5.10 OPTIMUM REINFORCEMENT ARRANGEMENT FOR CIRCULAR CEE COLUMNS

but asymmetrical about the Y-Y axis due to the opening, interaction curves symmetrical about the X-X axis have been plotted for a wide range of values of $P_u/f_{ck}A_g$ equal to 0.25, 0.5, 0.75, and 1.0. Interaction curves for two values of Pu/fckAg have been included in one chart. These charts have been plotted for a very wide range of values of precentage of steel pfy/fck equal to 3 and 10 to 120 in increments of 10. The lower value of pf_y/f_{ck} equal to 3 has been adopted on the consideration that a minimum reinforcement of 0.15 percent of gross concrete area can be provided where L/D ratio is less than 3. For L/D ratio greater than 3, the minimum percentage of area of steel is 0.8 which can be reduced in case the loadings do not require 0.8 percent steel. In such cases the code provides for calculating the area of steel at the rate of 0.8 percent of the area of concrete required to resist the direct axial stress, and not upon the actual area.

Although the amount of reinforcement is kept equal in both the webs of rectangular cee sections and uniform in circular cee sections, the area of concrete gets reduced in the web with opening. As a result the moment capacity of cee section about Y-Y axis that causes compression in the web with opening shall have reduced value. This is evident from a slight lurch noticed in the interaction curves towards the irght. Therefore in case of possibility of reversal of bending moment about Y-Y axis it is advisable to use the conservative side of the interaction curves which gives higher value of area of steel.

It has been observed that the interaction curves for hollow circular columns and those of hollow hexagonal columns having similar geometrical attributes compare very well. Therefore hexagonal and octagonal cee shaped reinforced concrete columns can also be designed using the interaction curves for circular shaped column presented in this thesis.

All design charts have been plotted through computer using a standard CAD package, by making direct access to the program output. This has eliminated any chance of human error in data transfer and has ensured utmost accuracy. The interaction curves (Design Charts) for cee shaped rectangular and circular reinforced concrete columns appear in Appendix - A2.

5.9 DESIGN EXAMPLES

5.9.1 RECTANGULAR CEE SECTION

Design the reinforcement for a cee shaped rectangular short column having overall depth of 3600 mm, breadth of 1200 mm, cut of 1000mm, wall thickness of 240 mm and subjected to ultimate axial load of 9200 kN and ultimate bending moments of 35800 kN.m. and 3000 kN.m. about X and Y axes respectively. The effective cover to main reinforcement is 40 mm. The grades of concrete and steel are M 20 and Fe415 respectively.

Solution :

The cross-sectional details of the column are shown in Fig. 5.11

Compute,

$d'/D = 40/3600 \quad = 0.011 \simeq 0.012$

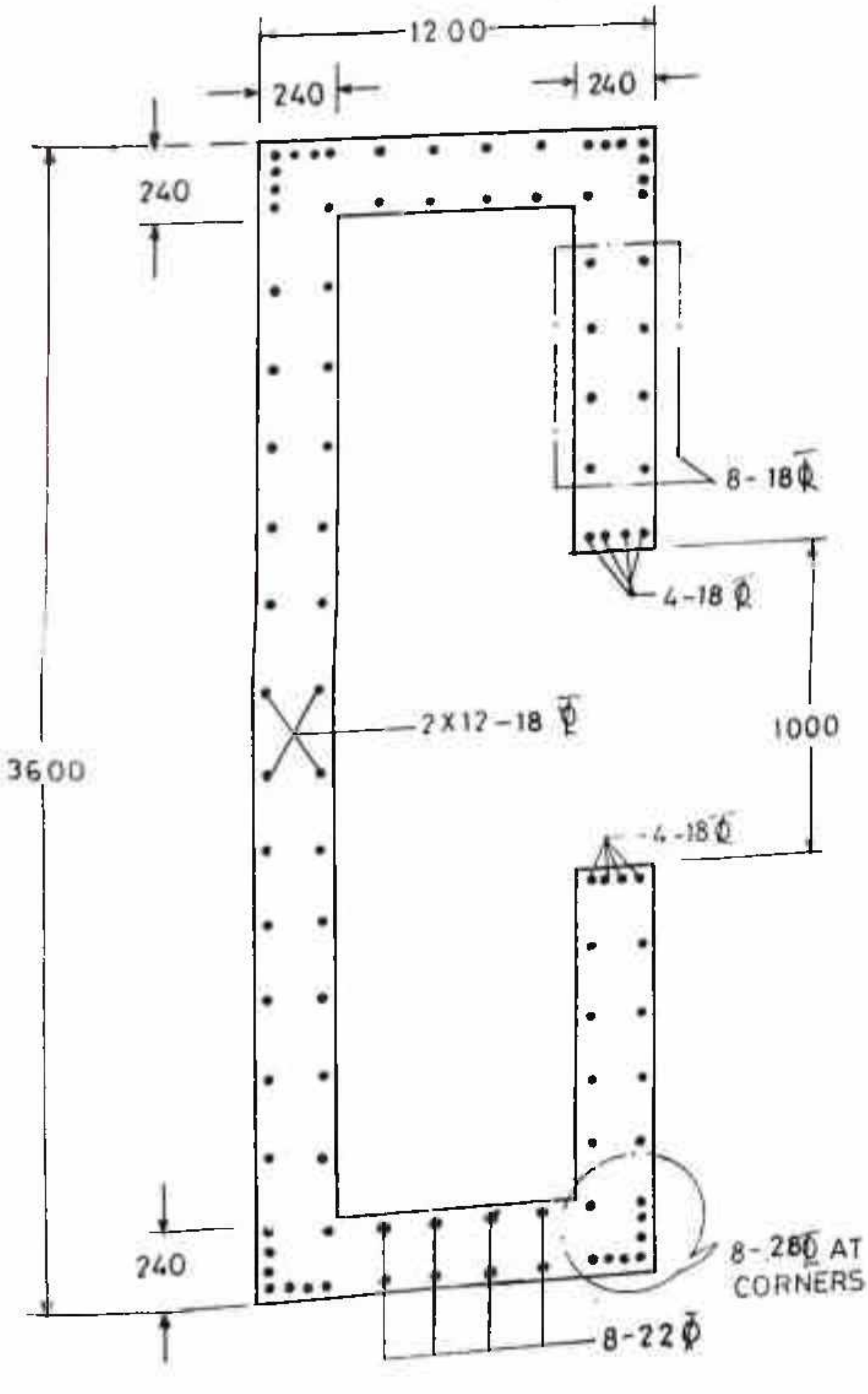

Fig. 5·11 DESIGN EXEMPLE OF RECTANGULAR CEE COLUMN SECTION

D/B = 3600/1200 = 3.0

D/T = 3600/240 = 15

C = 1000

A_g = (3600 x 1200) - (720 x 3120) - (240 x 1000)

= 1833600 mm^2

$P_u/f_{ck} A_g$ = 9200 x 10^3 /(20 x 1833600) = 0.2508

(= 0.25)

Z_x = 1.5685 x 10^9 mm^3

Z_{y1} = 6.6584 x 10^8 mm^3

Z_{y2} = 5.3961 x 10^8 mm^3

$M_{ux}/f_{ck} Z_x$ = 35800 x 10^6 /(20x1.5685x10^9)

= 1.141 (P_1)

$M_{uy}/f_{ck} Z_{y1}$ = 3000x10^6 /(20x6.6584x10^8)

= 0.2253 (P_2)

$M_{uy}/f_{ck} Z_{y2}$ = 3000x10^6 /(20x5.3961x10^8)

= 0.278 (P_3)

Refer Chart A2.9 corresponding to D/B = 3.0, d'/D = 0.012 D/T = 15 and dimension range 2500 < D < 4000 mm.

The interaction curves for $P_u/f_{ck} A_g$ = 0.25 are in the lower half. Corresponding to points P_1 and P_3, point P_4 gives the value of pf_y/f_{ck} relevant to $M_{uy}/f_{ck} Z_{y2}$. Similarly, corresponding to points P_1 and P_2, point P_5 gives the value of pf_y/f_{ck} relevant to $M_{uy}/f_{ck} Z_{y1}$. We have to pick up the higher of the two values, i.e. P_5 = 50

PC = 100 pf_y/f_{ck} = 50

$$\therefore A_s = 50 \times \frac{20}{415} \times \frac{1833600}{100} = 44183 \text{ mm}^2$$

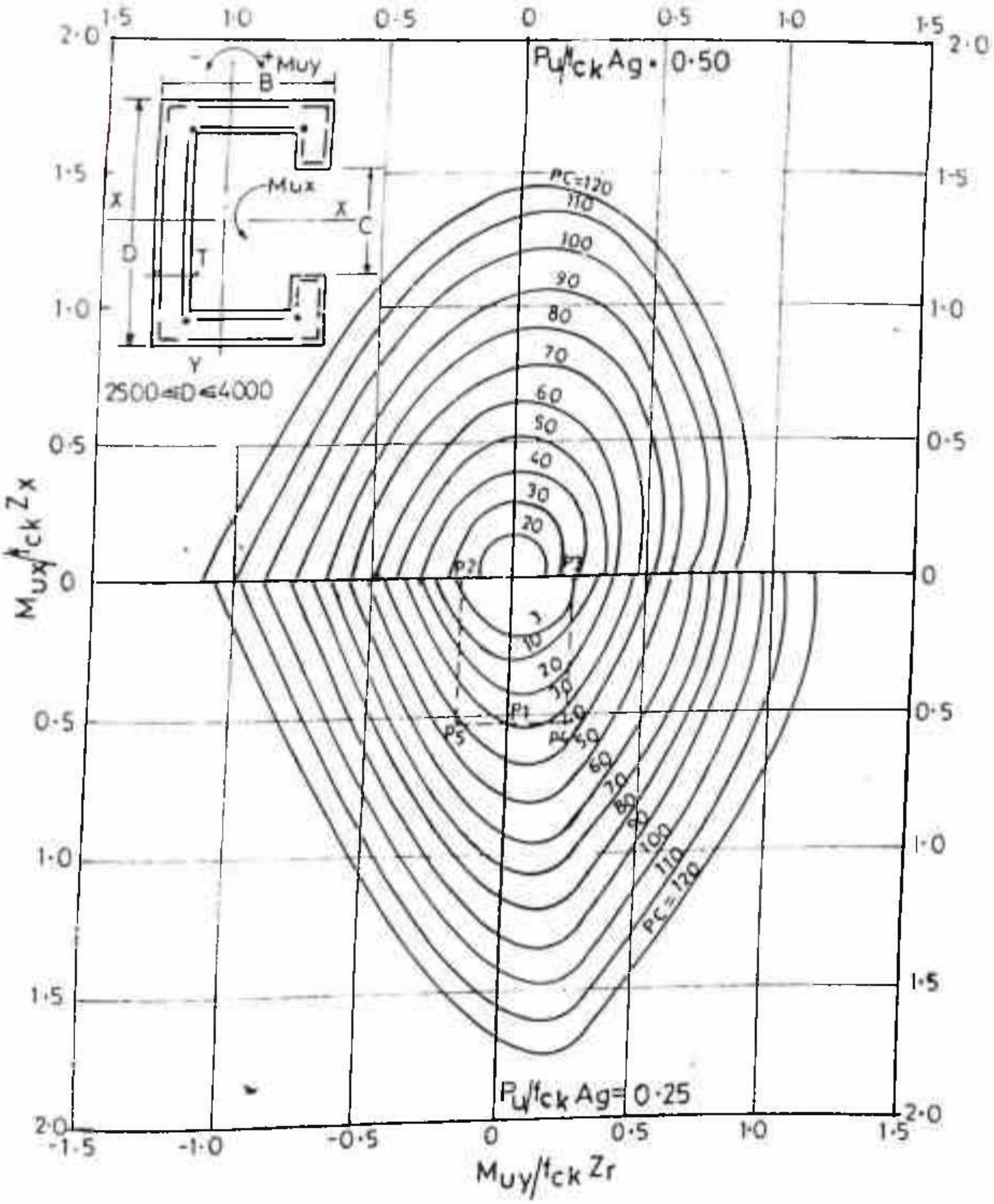

HART A2·9 DESIGN CHART FOR RECTANGULAR CEE COLUMNS

D/B = 3·0 ; $d'/D = 0{\cdot}012$; D/T = 15 ; C = 1000

For optimum reinforcement arrangement.

Corner steel = 0.1316 × A_g = 0.1316 × 44183 = 5814 mm^2

Provide 8-32 φ bars (Area of steel = 6434 mm^2) at each corner as shown in Fig. 5.11 .

Flange steel = 0.0788 × 44183 = 3482 mm^2

Provide 4-25 φ + 4-22 φ bars (Area of steel = 3484 mm^2) in each flange.

Web steel = 0.158 × 44183 = 6981 mm^2

Provide 24-25 φ bars (Area of steel = 7540 mm^2) in each web.

Provide 4-20 φ at each edge across the cut, and the remaining 16 bars (24 - 2×4) can be provided in the web, 8 in each part.

The reinforcement detailing as shown in Fig. 5.11 has been made keeping in mind the criterion of minimum spacing of bars at corners and maximum spacing in the web and flange as per IS:456-78.

5.9.2 CIRCULAR CEE SECTION

Design the reinforcement for a circular cee shaped short column having outer diameter of 3000 mm, wall thickness of 300 mm, cut of 1000 mm and subjected to ultimate axial load of 11000 kN and ultimate bending moments of 9500 kNm. and 7400 kNm. about X and Y axes respectively. The effective cover to main reinforcement is 40 mm. The grades of concrete and steel are M.20 and Fe415 respectively.

Solution :

The cross-sectional details of the column are shown in Fig. 5.12

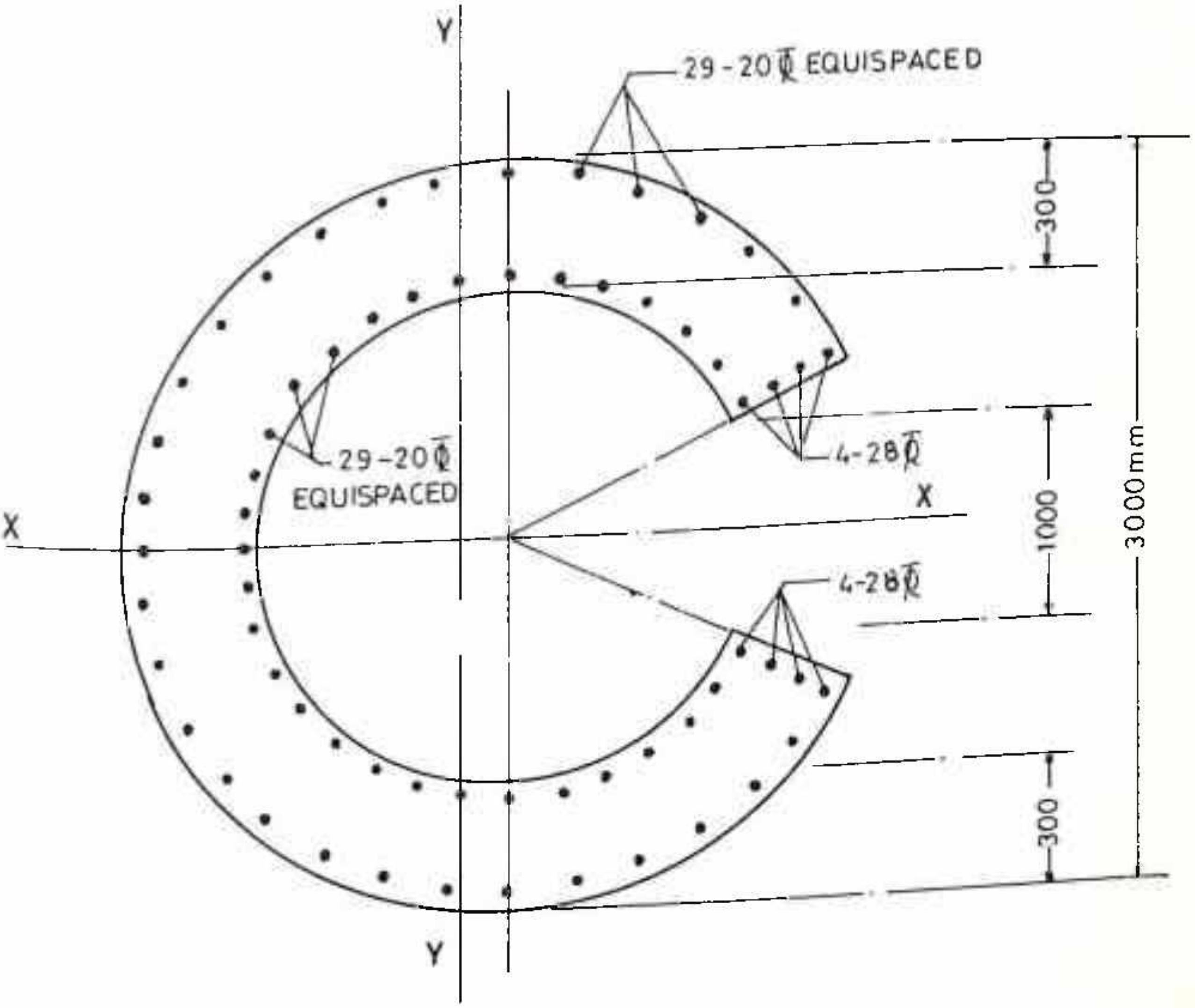

Fig. 5.12 DESIGN EXEMPLE OF CIRCULAR CEE COLUMN SECTION

Compute,

$d'/D = 40/3000 = 0.0133 \simeq 0.12$

$D/T = 3000/300 = 10$

Angle of opening, $A = (1000/2) / (3000/2 - 300) = 0.417$ Radians

$A_g = (1500^2 - 1200^2) \times (3.1416 - 0.417)$

$= 2207163 \text{ mm}^2$

$P_u/f_{ck}A_g = 11000 \times 10^3 / (20 \times 2207163) = 0.2492$

$\simeq 0.25$

$Z_x = 1.7261 \times 10^9 \text{ mm}^3$

$Z_{y1} = 1.0731 \times 10^9 \text{ mm}^3$

$Z_{yr} = 8.8590 \times 10^8 \text{ mm}^3$

$M_u/f_{ck} Z_x = 9500 \times 10^6 / (20 \times 1.7261 \times 10^9)$

$= 0.2752 \; (p_1)$

$M_u/f_{ck} Z_{y1} = 7400 \times 10^6 / (20 \times 1.0731 \times 10^9)$

$= 0.3448 \; (p_2)$

$M_u/f_{ck} Z_{yr} = 7400 \times 10^6 / (20 \times 8.8590 \times 10^8)$

$= 0.4176 \; (p_3)$

Refer Chart A2.21 corresponding to $d'/D = 0.012$, $D/T = 15$ and

$P_u/f_{ck}A_g = 0.25$

Corresponding to points p_1 and p_2, point p_4 gives the value of pf_y/f_{ck} relevant to $M_{uy}/f_{ck} Z_{yr}$.

Similarly, corresponding to points p_1 and p_3, point p_5 gives the value of pf_y/f_{ck} relevant to $M_{uy}/f_{ck} Z_{y1}$. We have to pick up the higher of the two values, i.e. $PC = 19$.

$PC = 100\, pf_y/f_{ck} = 19$

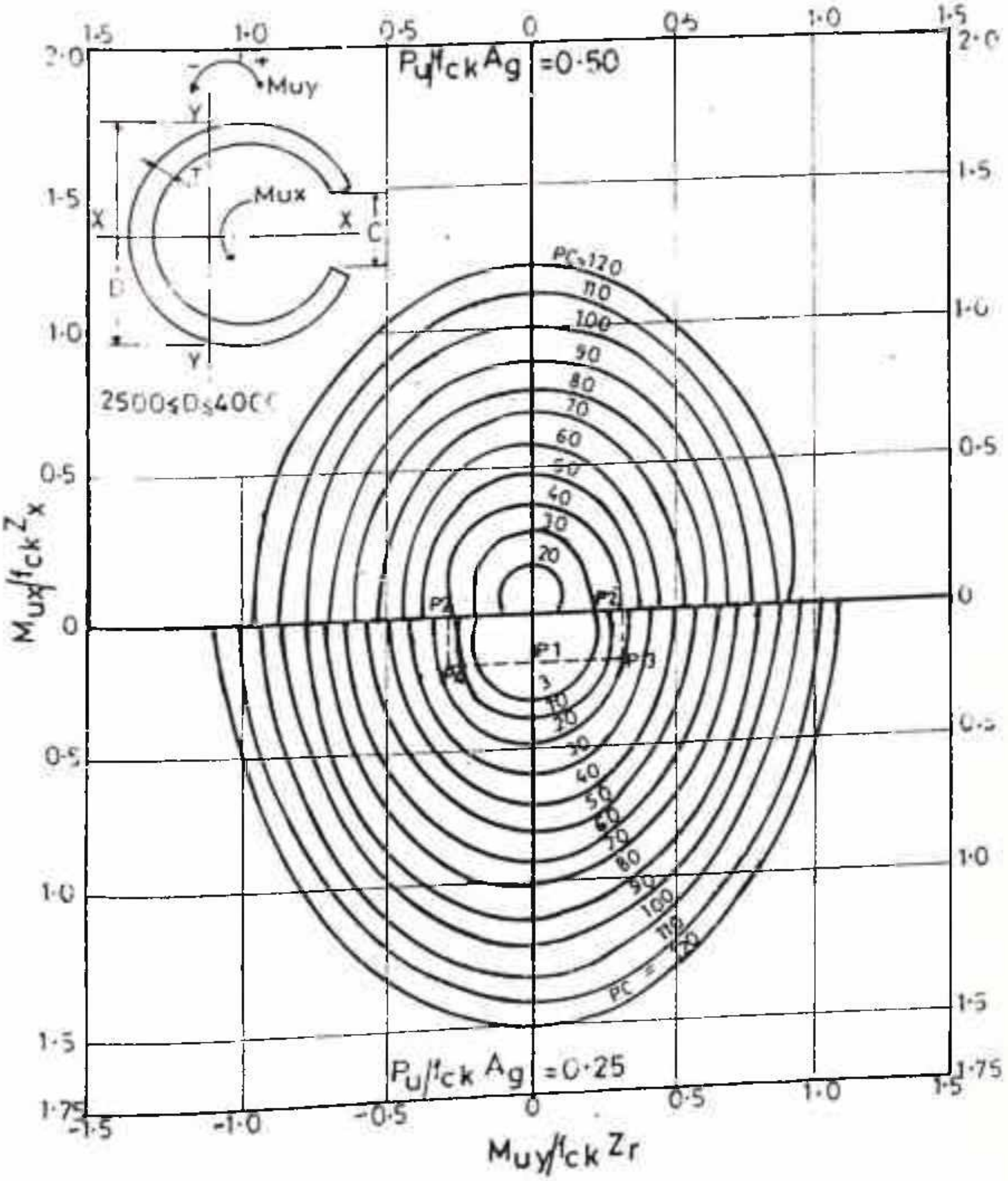

CHART A2·21 DESIGN CHART FOR CIRCULAR CEE COLUMN

$d'/D = 0.012$; $D/T = 10$; $C = 1000$

$$\therefore \quad A_s = 19 \times \frac{20}{115} \times \frac{2207163}{100} = 20210 \text{ mm}^2$$

Area of steel could be determined more accurately by linear interpolation of areas of steel obtained from charts for d'/D = 0.012 and 0.02.

Provide 50% steel on each face as per the basic assumption.

Provide 29-20 Ø bars equispaced on each face and 4-20 Ø bars at each edge across the opening, as shown in Fig. 5.12 .

A_s = 2 x (29 + 4) x 314.16 = 20735 mm^2 > 20210 mm^2 o.k.

Minimum spacing of bars on inner face = 239.2 mm > 3d o.k.

Maximum spacing of bars on outer face = 289.9 mm < 300 mm o.k.

5.10 CONCLUSIONS

Rectangular and circular cee shaped columns have wide application in structural systems. The proposed optimum reinforcement detailing evolved for a wide range of geometry of rectangular and circular cee shaped column sections facilitate their optimum design. The design curves presented are simple and useful. Hexagonal and octagonal cee shaped columns can also be designed using the interaction curves for circular cee sections.

CHAPTER 6 : INTERACTION CURVES FOR I/H SHAPED RC COLUMNS

6.1 GENERAL

I (wide flanged) or H - shaped column sections have been found to be highly cost efficient under predominantly flexural loading. For this reason they find frequent application in cantilever type structures, such as a cluster of umbrella shaped hyperbolic - paraboloid shell roofs each supported on a central post. Architects prefer I/H - shaped columns to solid rectangular ones because it is convinient to camouflage service lines and cables inside the notches. Moreover, the H - shaped columns provide a pleasing facia.

The effect of reinforcement distribution on different geometries of I/H - shaped column section has been investigated to arrive at the optimum reinforcement distribution patterns. Some typical interaction curves obtained by plotting biaxial moments for different values of areas of steel and a particular value of axial force are presented out of the large number of curves prepared, by covering a wide range of geometry and other design parameters.

6.2 GEOMETRY OF SECTIONS

The geometrical parameters affecting the strength of I/H shaped RC columns are its overall depth D , flange width B and thickness T. The thickness has been assumed to be uniform for its both flanges and web. A minimum value of the depth D equal to 500 mm in view of the convinience in formwork and a maximum value of 1500 mm from architectural and structural considerations have been adopted. The width of both flanges has been considered equal and has been expressed in terms of the depth to breadth (D/B) ratio. The values of D/B ratio equal to 0.5, 0.667, 1.0, 1.5 and 2.0 have been considered. A minimum value of thickness T equal to 100 mm has been adopted from the consideration of reinforcement placement and proper concreting. A minimum clear cover of 40 mm to the main reinforcement bars is provided where T is more than 200 mm. For T less than or equal to 200 mm a minimum clear cover of 25 mm to the main reinforcement bars may be adopted.

Based on the above, the following geometrical parameters have been adopted :

D/B	D/T	d'/D
0.5	3, 4	0.06, 0.07
0.667	3, 4	0.06, 0.07
1.0	3, 4	0.05, 0.06
1.5	4, 5	0.03, 0.05
2.0	5, 6	0.03, 0.05

6.3 OPTIMUM REINFORCEMENT PATTERN

I/H - shaped reinforced concrete sections have been found to be optimally reinforced when a major portion of the reinforcement is concentrated at the four extreme corners having peak stresses under biaxially eccentric loading. However, beyond a certain percentage of the total reinforcement at corners, the section becomes uneconomical. Therefore a study has been made to arrive at the optimum reinforcement distribution for each geometry of column section. This is obtained by comparison of interaction curves corresponding to different reinforcement arrangements for the same column section and area of reinforcement. Figure 6.1 shows a plot of interaction curves for $D=600$ mm, $D/B=0.5$, $D/T=3$, $d'/D=0.06$ and reinforcement arrangements (a), (b), (c) and (d). Interaction curves have been obtained by plotting biaxial moments for a particular value of axial force. It may be observed that curve (d) corresponding to the reinforcement detailing having a concentration of 75.0 percent of the total reinforcement at the four corners (i.e. 18.75% of reinforcement at each corner) covers the maximum area on the interaction chart, and therefore represents the optimum reinforcement pattern. Similarly Figs.6.2 to 6.5 show the optimum reinforcement pattern for other geometries of I/H - shaped column sections.

In order to study the effect of wall thickness T on the optimum reinforcement pattern, interaction curves of a particular column section were plotted for different values of D/T, keeping all other variables fixed. It was observed that the same reinforcement pattern was optimum in all the cases. Therefore it can be infered that wall thickness T does not affect the optimum reinforcement pattern.

Based on the above, the optimum reinforcement pattern for various geometries of I/H - shaped RC column are shown in Fig. 6.6 .

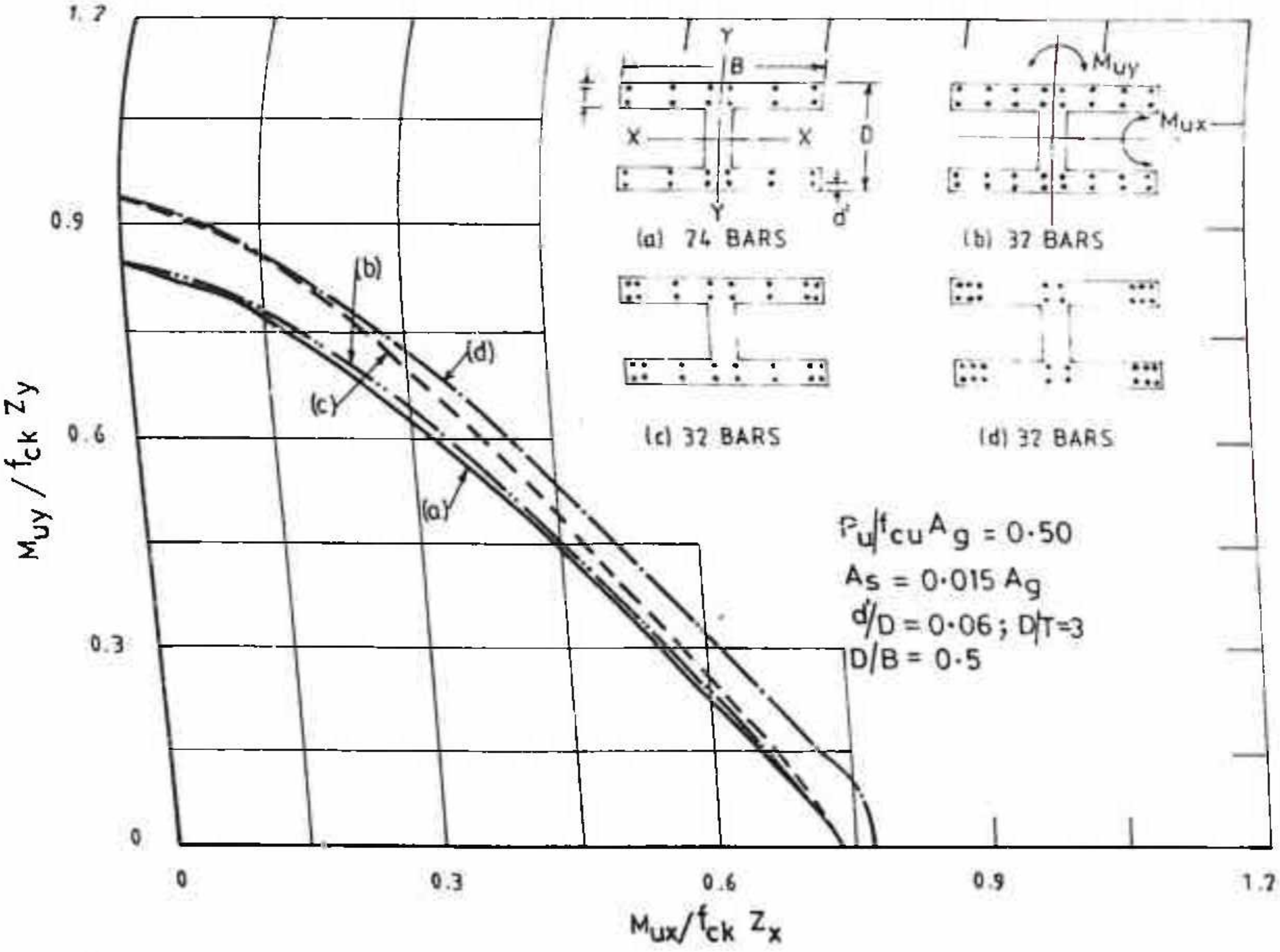

Fig. 6.1 INTERACTION CURVES FOR DIFFERENT TYPES OF REINFORCEMENT

DETAILING FOR I/H-SHAPED COLUMNS

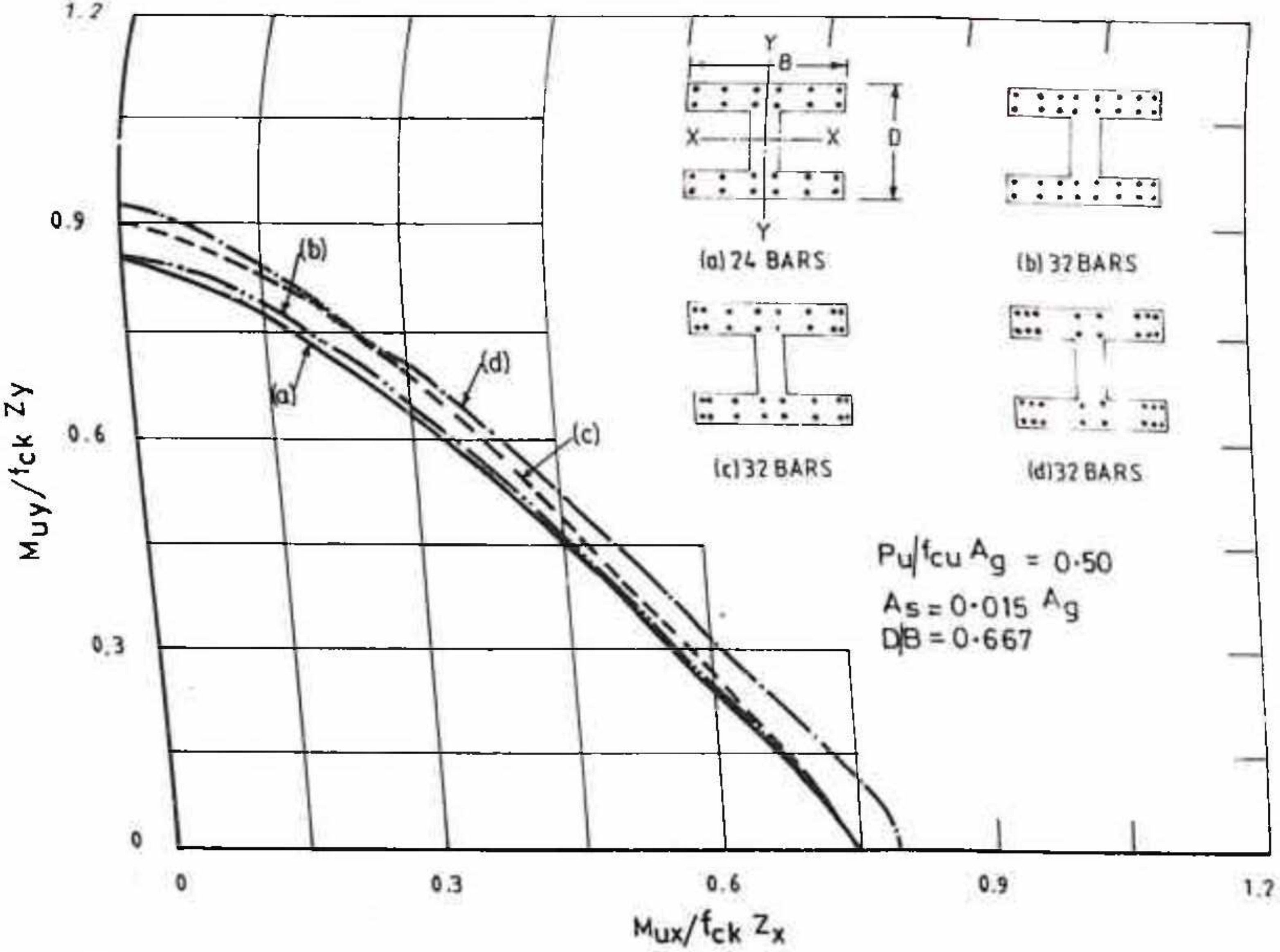

Fig.6·2 INTERACTION CURVES FOR DIFFERENT TYPES OF REINFORCEMENT DETAILING FOR I/H-SHAPED COLUMNS

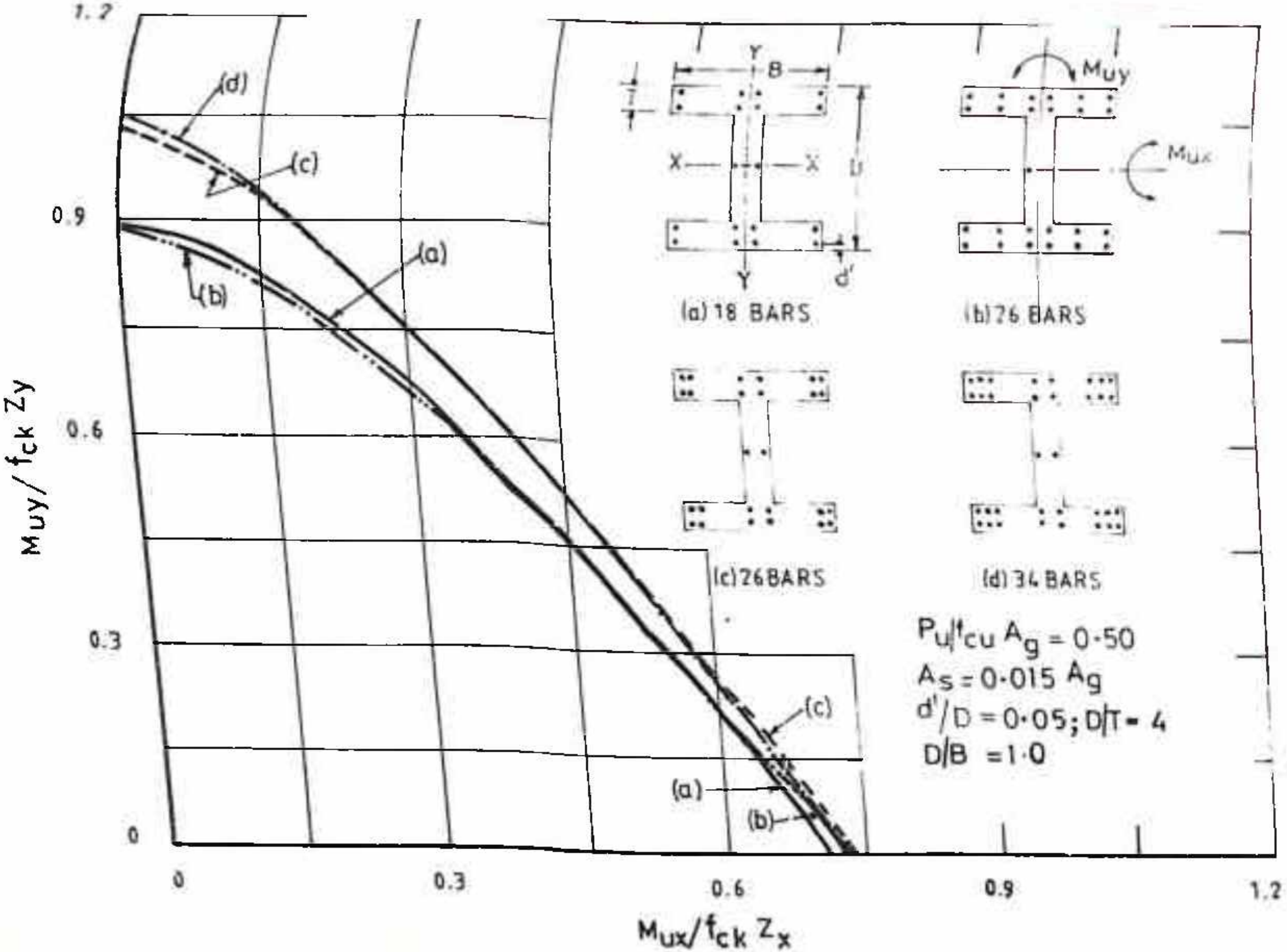

Fig. 6.3 INTERACTION CURVES FOR DIFFERENT TYPES OF REINFORCEMENT DETAILING FOR I/H-SHAPED COLUMNS

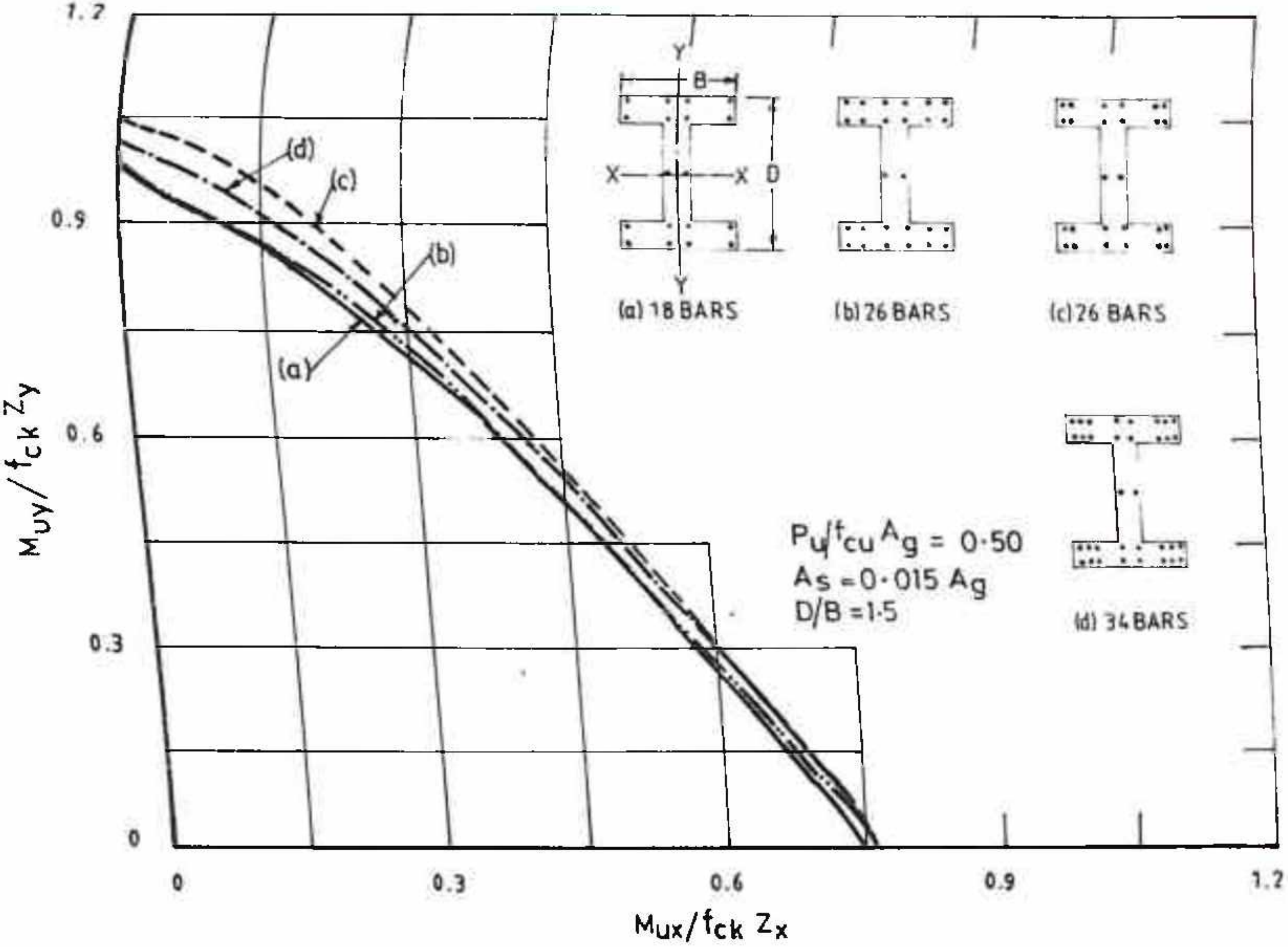

Fig.6·4 INTERACTION CURVES FOR DIFFERENT TYPES OF REINFORCEMENT DETAILING FOR I/H-SHAPED COLUMNS

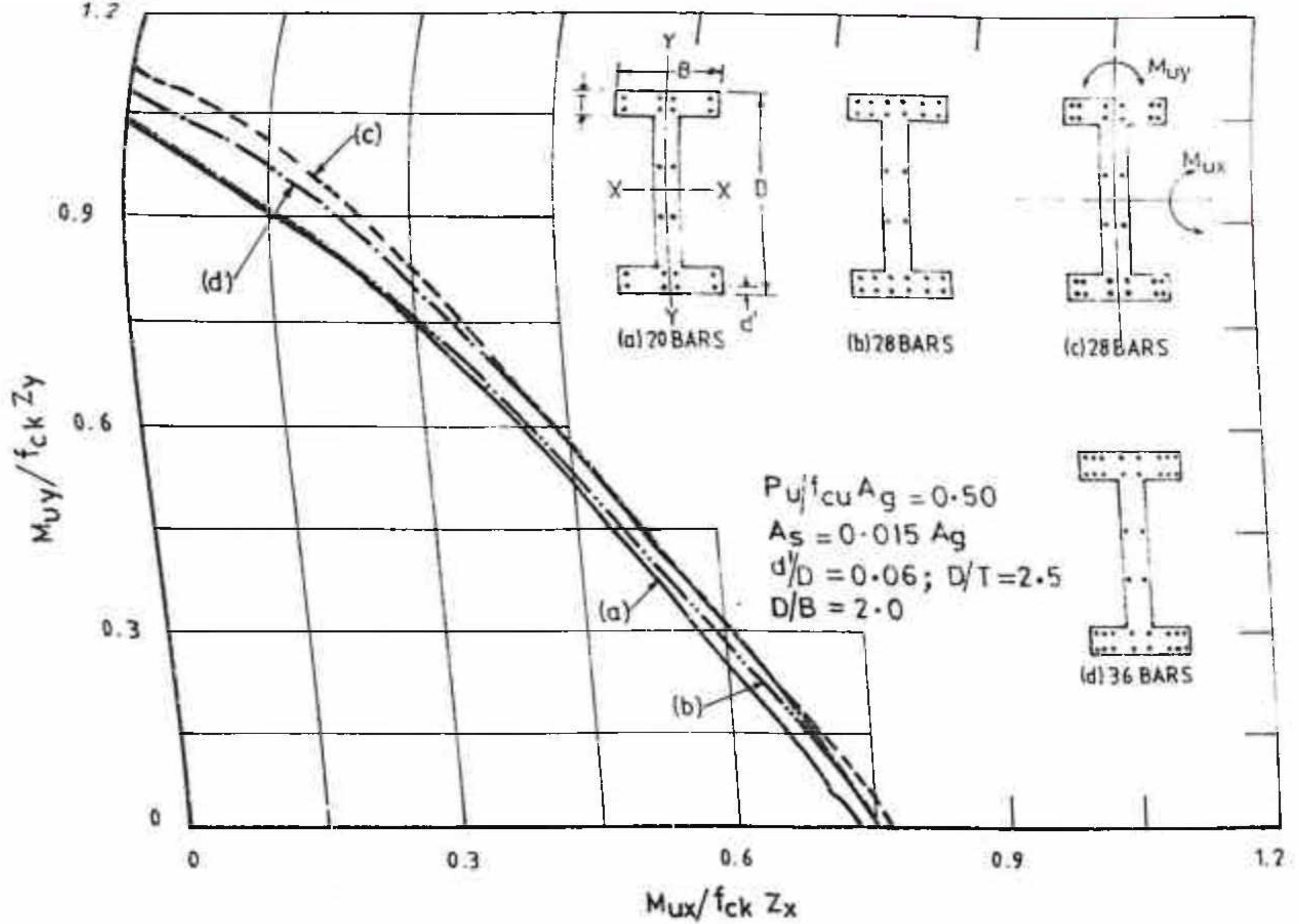

Fig. 6.5 INTERACTION CURVES FOR DIFFERENT TYPES OF REINFORCEMENT DETAILING FOR I/H-SHAPED COLUMNS

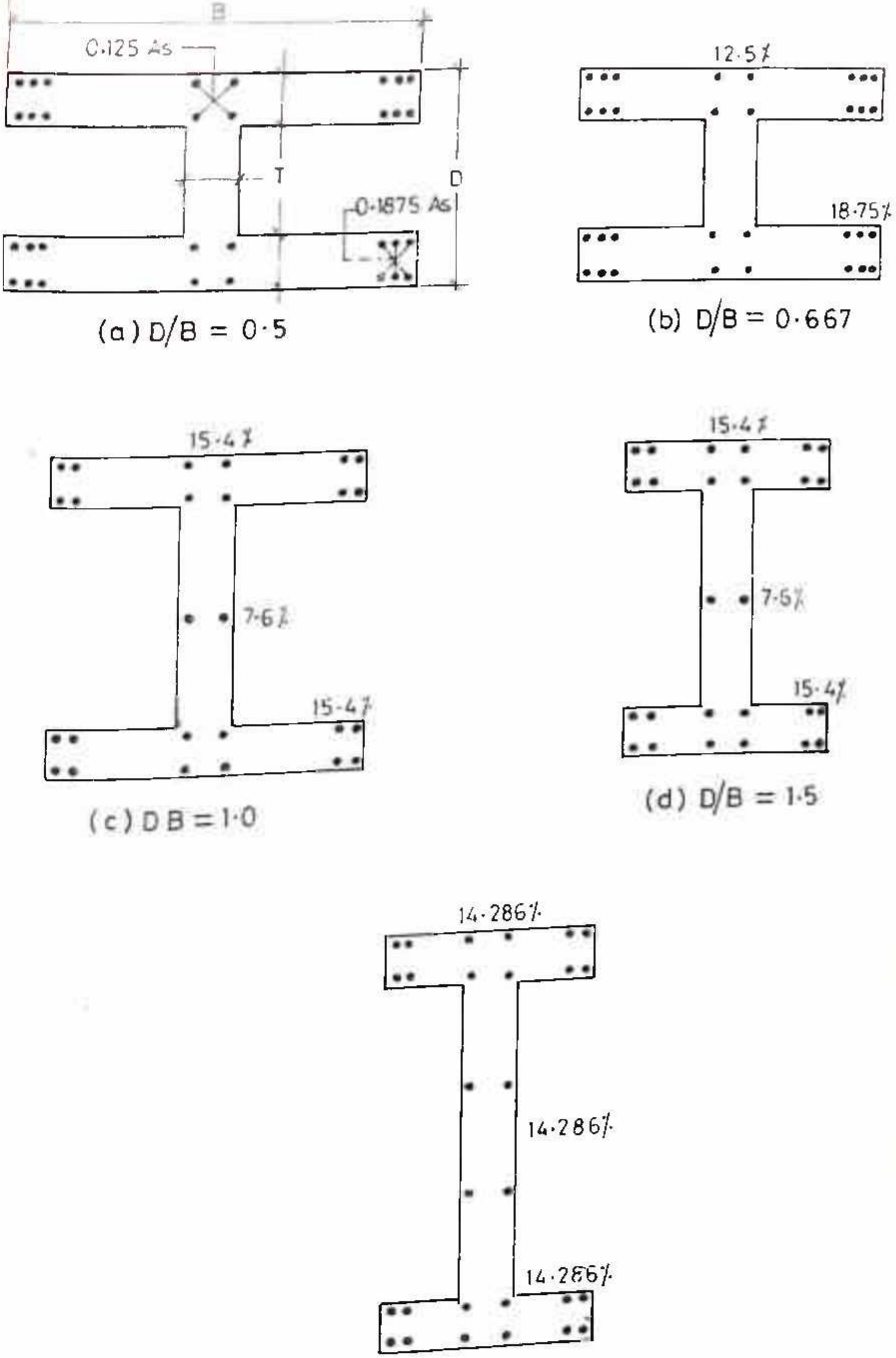

(a) D/B = 0.5

(b) D/B = 0.667

(c) D B = 1.0

(d) D/B = 1.5

(e) D/B = 2.0

Fig. 6.6 OPTIMUM REINFORCEMENT ARRANGEMENT FOR I/H-SHAPED COLUMNS

The following criterion shall be adopted while apportioning the reinforcement bars of I/H sections :

a) Corner reinforcement shall be concentracted at the corners as far as practicable subject to the codal requirement of minimum spacing of bars.

b) Mid flange reinforcement should be uniformly spaced over the remaining space between the reinforcement at the two corners, subject to codal requirement of maximum spacing of bars.

c) Web reinforcement if provided should also be uniformly distributed as above.

d) In Figs. 6.6(a) & (b) for most practical cases the clear height of web would be less than the maximum spacing criterion. However, if the clear height is more than 300 mm, additional nominal bars should be provided to satisfy the codal requirement.

The optimum reinforcement detailing as shown in Fig. 6.6 is based on the assumption that all bars are of the same diameter. However, in actual practice it may not be always possible to comply to this assumption. In such cases reinforcement bars of different diameters may be used as long as the percentage of steel area earmarked for a particular location as indicated in Fig. 6.6 is maintained.

6.4 DESIGN CHARTS

One quarter symmetrical interaction curves about two orthogonal axes of symmetry have been shown for a wide range of values of $P_u/f_{ck}A_g$ equal to 0.25, 0.5, 0.75 and 1.0. Interaction curves for four values of $P_u/f_{ck}A_g$ have been included in one chart. These charts have been plotted for a very wide range of values of pf_y/f_{ck} varying from 10 to 120 in increments of 10. The lower value of pf_y/f_{ck} equal to 10 has been adopted on the consideration that a minimum reinforcement of 0.50 percent of gross concrete area can be provided where the loadings do not require the minimum prescribed area of steel (0.8 percent of gross concrete area). In such cases the code provides for calculating the area of steel at the rate of 0.8 percent of the area of concrete required to resist the direct axial stress, and not upon the actual area. The interaction curves (Design Charts) for I/H shaped reinforced concrete column s appear in Appendix - A - 3.

6.5 DESIGN EXAMPLE

Design the reinforcement for a H- shaped short column having overall depth of 700 mm, breadth of 700 mm, wall thickness of 175 mm and subjected to ultimate axial load of 1500 KN and ultimate bending moments of 395 kNm. and 220 kNm. about X and Y axes respectively. The effective cover to main reinforcement is 35 mm. The grades of concrete and steel are M 20 and Fe415 respectively.

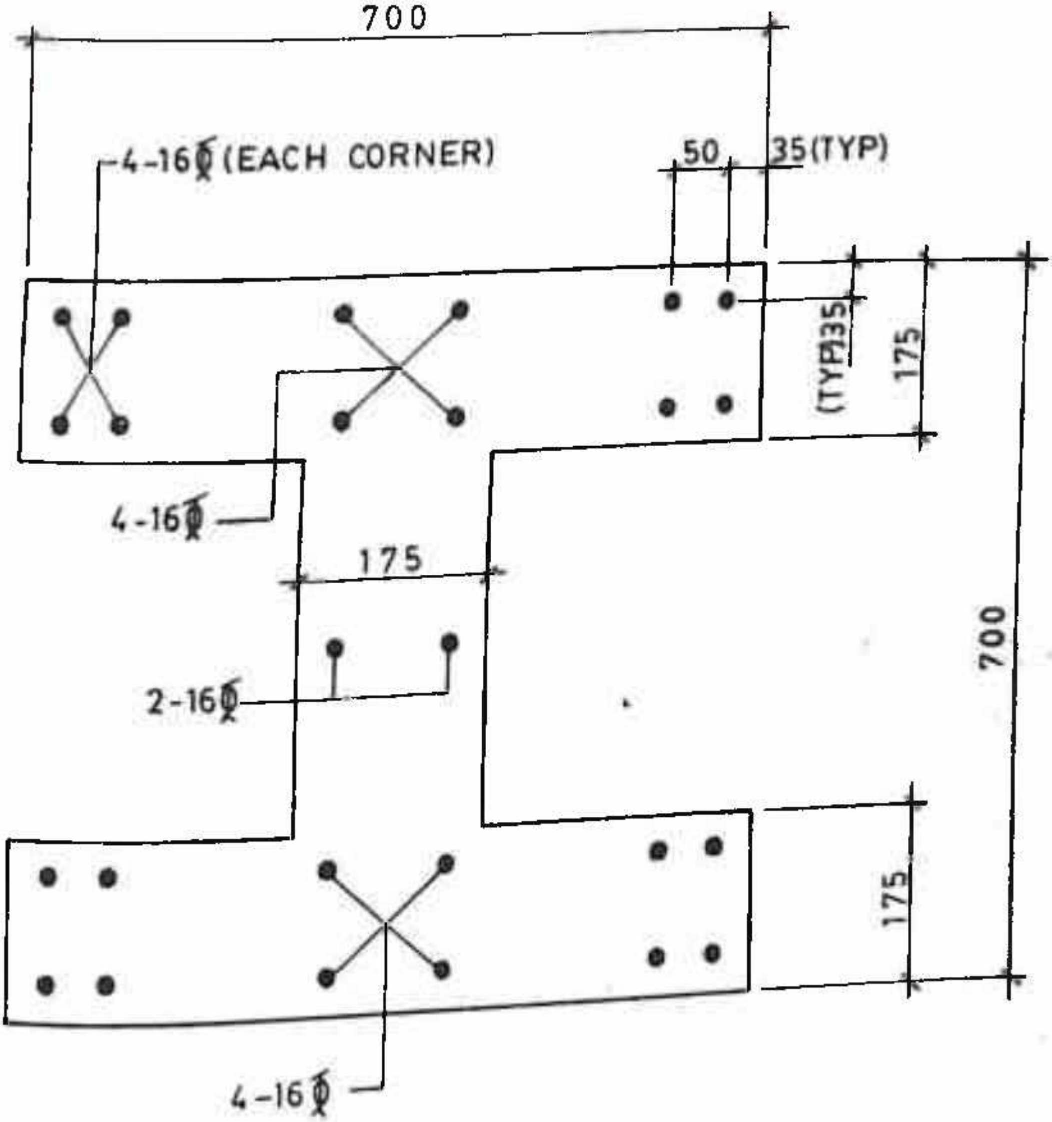

Fig. 6·7 DESIGN EXAMPLE

Solution :

The cross-sectional details of the column are shown in Fig. 6.7.

Compute,

$d'/D = 35/700 = 0.05$

$D/B = 700/700 = 1.0$

$D/T = 700/175 = 4$

$A_g = (2 \times 700 \times 175) + (175 \times 350)$

$= 306250 \ mm^2$

$P_u/f_{ck}A_g = 1500 \times 10^3/(20 \times 306250) = 0.2449$

$\simeq 0.25$

$Z_x = 5.1807 \times 10^7 \ mm^3$

$Z_y = 2.9030 \times 10^7 \ mm^2$

$M_{ux}/f_{ck}Z_x = 395 \times 10^6/(20 \times 5.1807 \times 10^7)$

$= 0.381$

$M_{uy}/f_{ck}Z_y = 220 \times 10^6/(20 \times 2.9030 \times 10^7)$

$= 0.379$

Refer Chart A3.6 corresponding to D/B = 1.0, d'/D = 0.05 and D/T = 4. The interaction curves for $P_u/f_{ck}A_g = 0.25$ are in the first quardrant. Point P_3 gives the value of pf_y/f_{ck} corresponding to $M_{ux}/f_{ck}Z_x = 0.381$ and $M_{uy}/f_{ck}Z_y = 0.379$ as follows :

$PC = 100 \ pf_y/f_{ck} = 30$

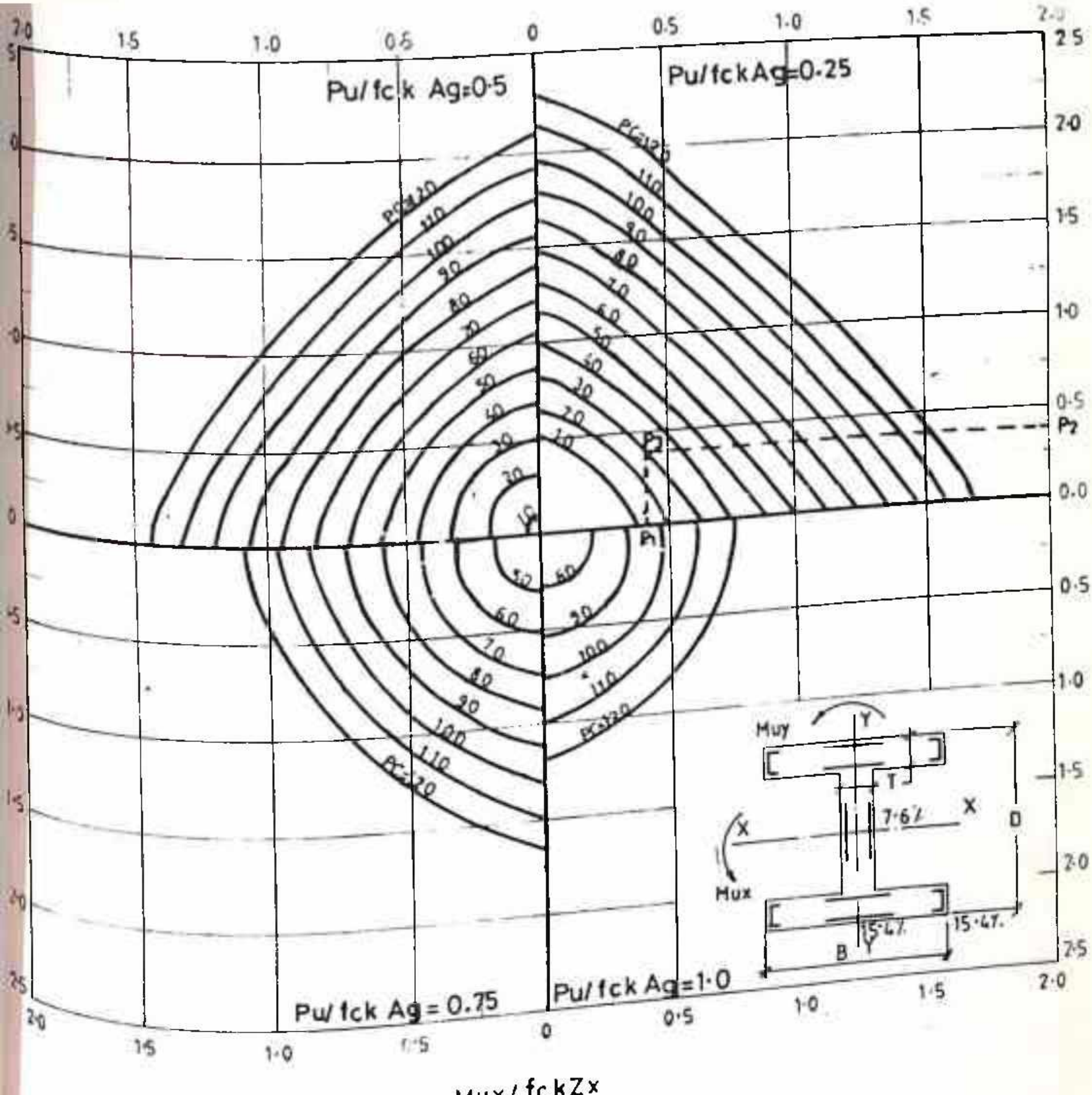

CHART A3·6 DESIGN CHART FOR I/H-SHAPED COLUMNS

D/B = 1.0 ; d'/D = 0.05 ; D/T = 4

$$\therefore A_s = 30 \times \frac{20}{415} \times \frac{306250}{100}$$

$$= 4428 \text{ mm}^2$$

For optimum reinforcement arrangement,

Corner steel = $0.154 \times A_s = 0.154 \times 4428 = 682 \text{ mm}^2$

Provide 4-16 Ø bars (Area of steel = 804 mm^2) at each corner as shown in Fig. 6.7.

Flange steel = $0.154 \times 4428 = 2004 \text{ mm}^2$

Provide 4-16 Ø bars (Area of steel = 804 mm^2) in each flange.

Web steel = $0.076 \times 4428 = 337 \text{ mm}^2$

Provide 2-16 Ø bars (Area of steel = 402 mm^2) in each web.

The reinforcement detailing as shown in Fig. 6.7 has been made keeping in view the criterion of minimum spacing of bars at corners and maximum spacing in the web and flange as per IS:456-78.

6.6 CONCLUSIONS

The proposed optimum reinforcement detailing evolved for a wide range of geometry of I/H - shaped column section facilitate its optimum design. The design charts presented are simple and extremely useful to the practical designer.

CHAPTER 7 : CONCLUSIONS

Modern architects often adopt 'Pylon' type columns (i.e. columns having large girth) for commercial and industrial buildings from aesthetic and utility considerations. The pylons are usually kept hollow so that service lines could be run through them. From structural enonomy consideration also, hollow RCC pylons offer very high moment of resistence as compared to solid core columns containing the same volume of concrete. Hollow column sections find usful application in multistoreyed buildings, large span suspension roof systems like indoor stadia, chimneys, shear walls and staging for liquid retaining structures.

This thesis has presented useful Interaction Curves for direct design of hollow reinforced concrete column sections subjected to the combined action of axial compression and biaxial bending moments based on the limit state method as per the provisions of IS:456-1978. Rectangular, circular and hexagonal hollow sections have been covered in the investigations. However, a striking resemblance was noticed between the interaction curves of circular and hexagonal sections having similar attributes and loadings. This implies that hexagonal, octagonal or for that matter any prismatic axisymmetrical section having six or more equal faces can be accurately designed using the interaction curves for circular sections. A wide variety of geometrical properties of sections as well as loading parameters have been included in the investigation, covering all practical aspects.

The investigations have been carried out using a general purpose computer program developed earlier and modified to suit hollow columns, incorporating the basic criterion for limit state of collapse as laid down by the Indian Code of Practice, IS:456-1978. The program accurately calculates the ultimate moment carrying capacity of a given short column section about its two orthogonal axes, under a given axial compressive force. Specially written subroutines automatically calculate the section properties of a given column section, totally obviating the chance of human errors and keeping the data input to bare minimum. The interaction curves have been plotted using a standard CAD package by making direct access to the computer output, thus eliminating all possibilities of human error.

An important and useful aspect of the investigation is the determination of optimum reinforcement arrangement for various shapes of hollow column sections. The information presented in easy access sketch format will effectively guide the designer to make the most economical use of reinforcement steel.

In most practical applications, hollow pylons are bound to have door opening at base. In case of rectangular sections being used as shear wall of a multistoreyed building, lift opening is required at each floor level. Extensive investigations have been carried out on finite element models of hollow columns with and without opening and the results have been summarised to help the designer take necessary precautions to strengthen the stress concentration areas. Since the geometrical attributes of the cut hollow column section, or to be more specific, cee shaped sections are somewhat different to those of closed sections, special subroutines have been written and a separate set of interaction curves plotted for rectangular and circular cee shaped reinforced concrete column sections. I or H shaped column sections, which is a variation of rectangular cee section, has also, been included in the study.

Thus the thesis presents a comprehensive design aid to the structural designer, covering all aspects of hollow reinforced concrete columns. Use of the interaction curves has been illustrated by a number of design examples. It can be seen that the design procedure is quick, simple, direct and yet accurate and comprehensive.

There is enormous scope of further research on the topic of hollow reinforced concrete columns, as summarized below :

(i) Architectural creativity of human mind knows no bounds, and given the structural designer's support, architects would like to adopt pylons of innumerable artistic shapes comprising oof combinations of various geometrical entities such as straight lines, circles, parabolas, hyperbolas etc. Interaction curves can be drawn for some of the most attractive and practical column sections and this would add a new dimension to structural engineering design.

(ii) Interaction curves can be drawn for a combination of axial tension and biaxial moments applicable to various hollow reinforced concrete column sections.

(iii) The effect of cyclic loading on hollow reinforced concrete columns of various shapes would make the subject matter of a useful and exhaustive research.

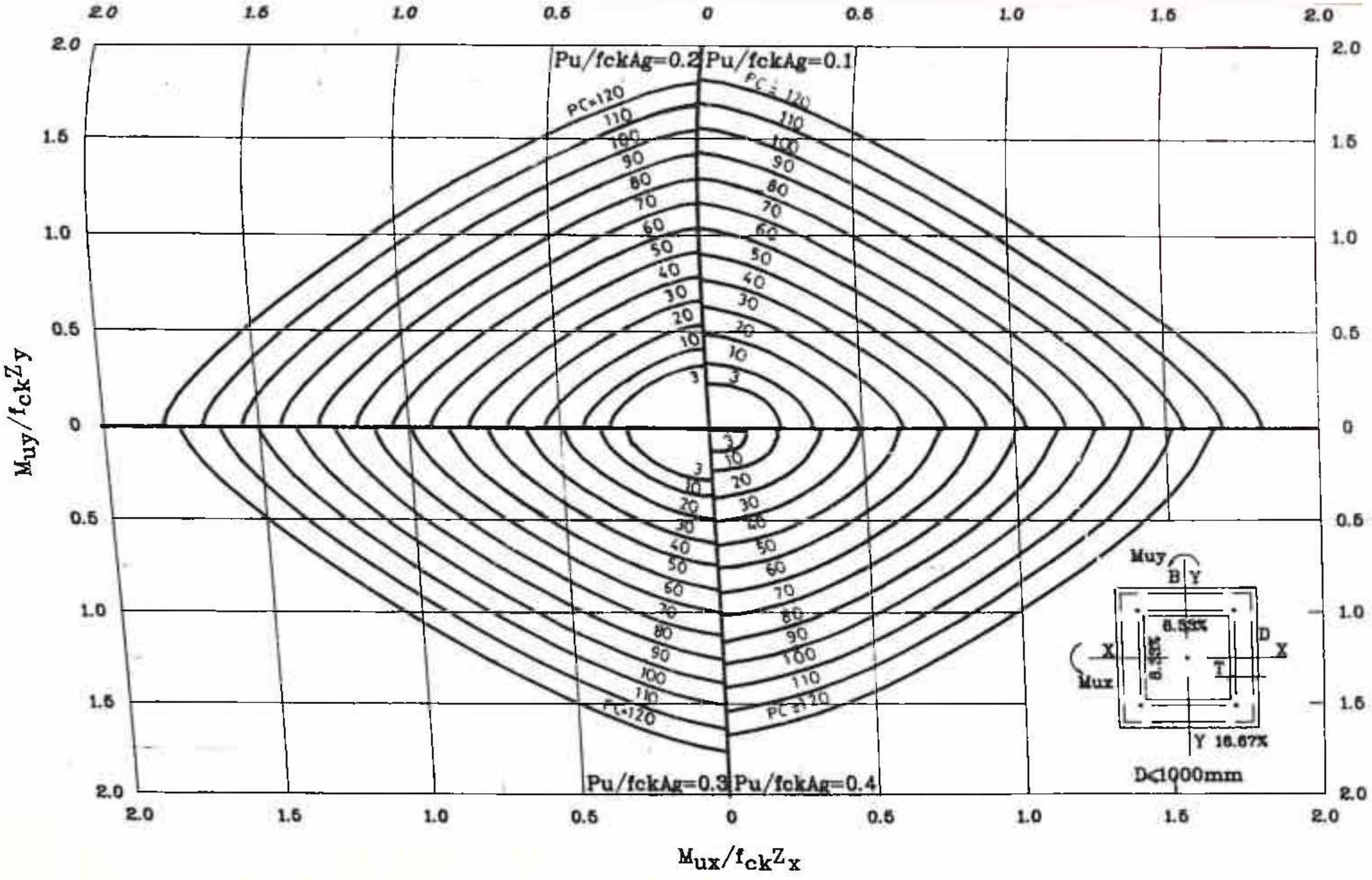

CHART A1.1 DESIGN CHART FOR RECTANGULAR HOLLOW COLUMNS

D/B=1.0 ; d'/D=0.03 ; D/T=5

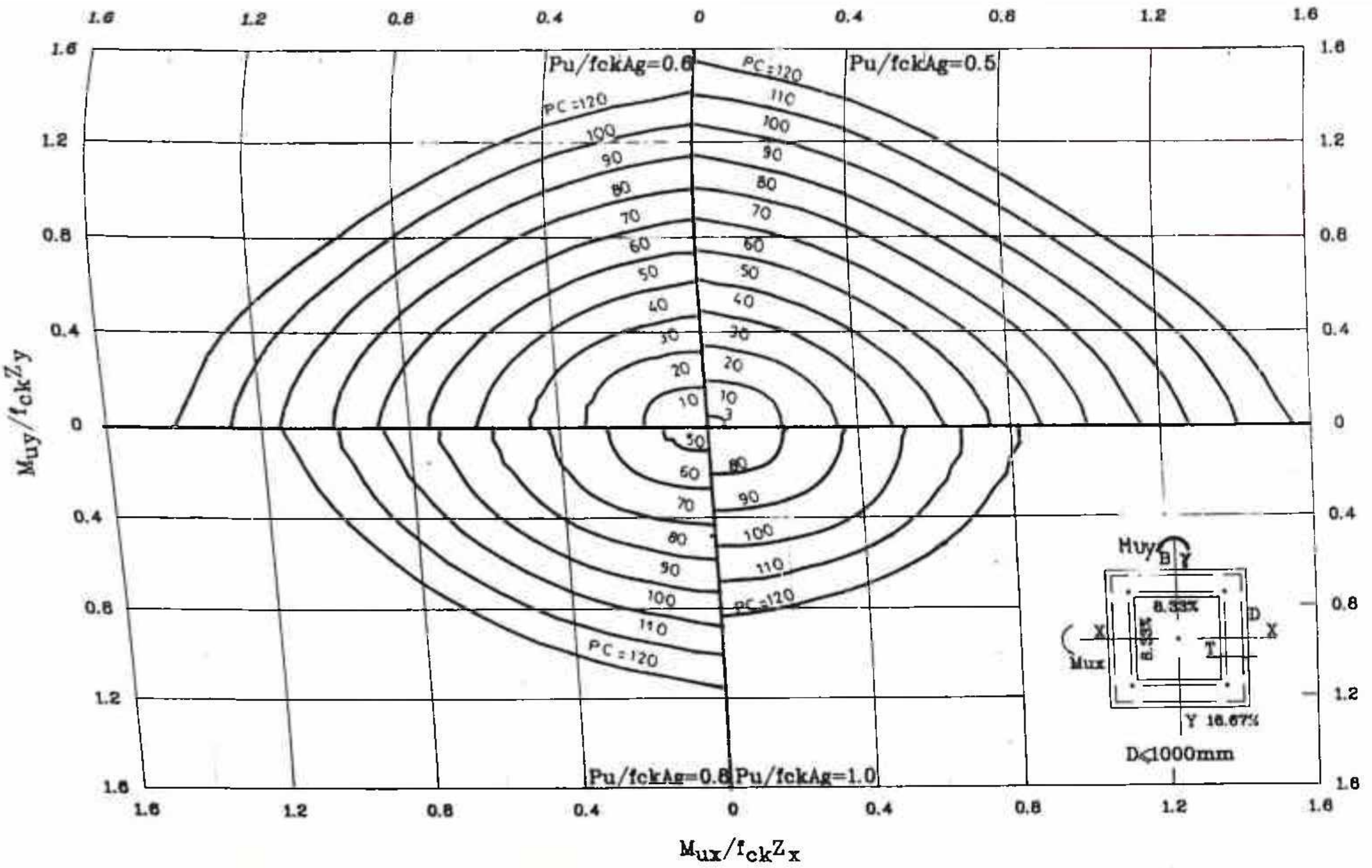

CHART A1·2 DESIGN CHART FOR RECTANGULAR HOLLOW COLUMNS

D/B=1.0 ; d'/D=0.03 ; D/T=5

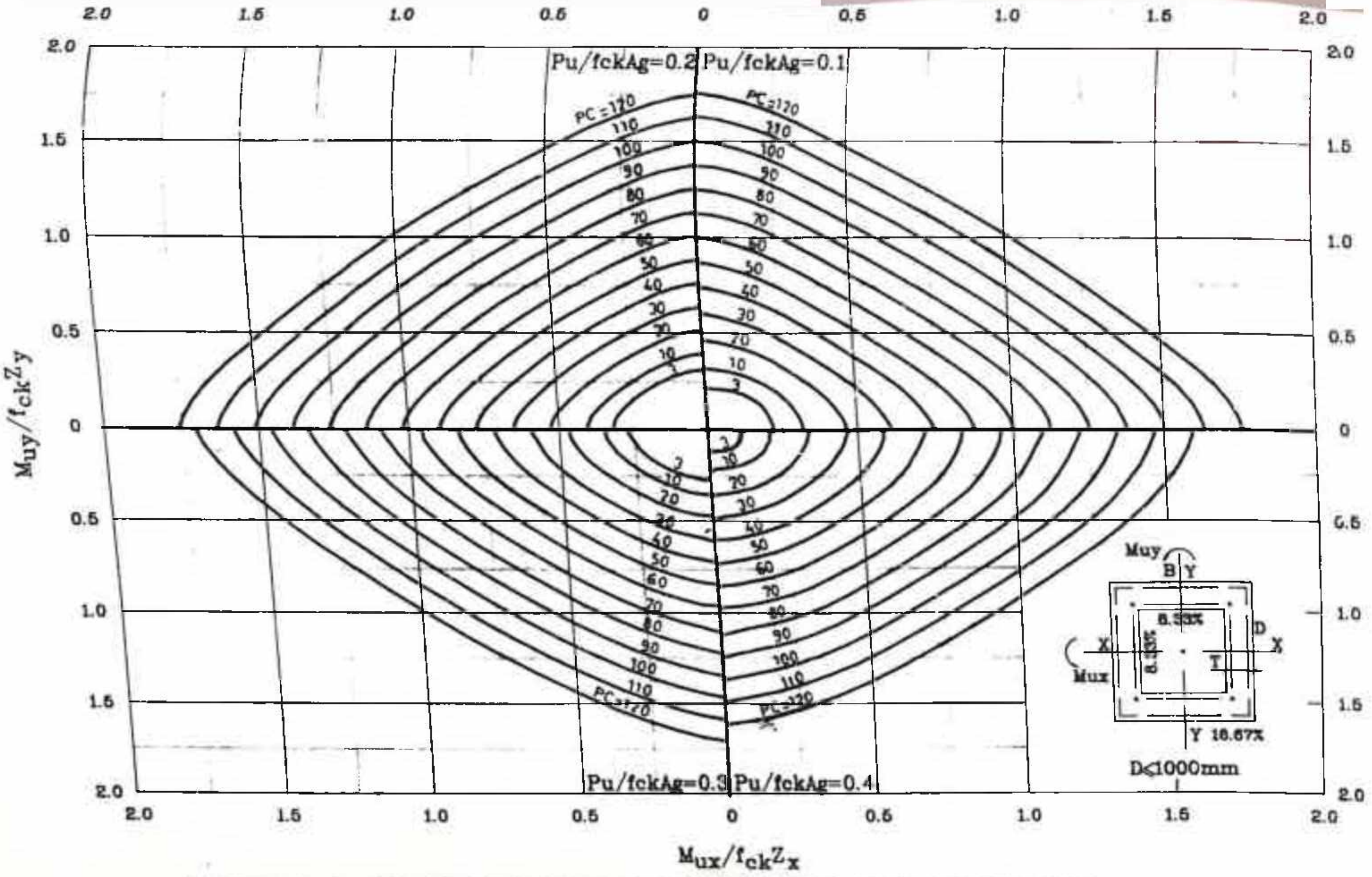

CHART A1·3 DESIGN CHART FOR RECTANGULAR HOLLOW COLUMNS

D/B=1.0 ; d'/D=0.03 ; D/T=7.5

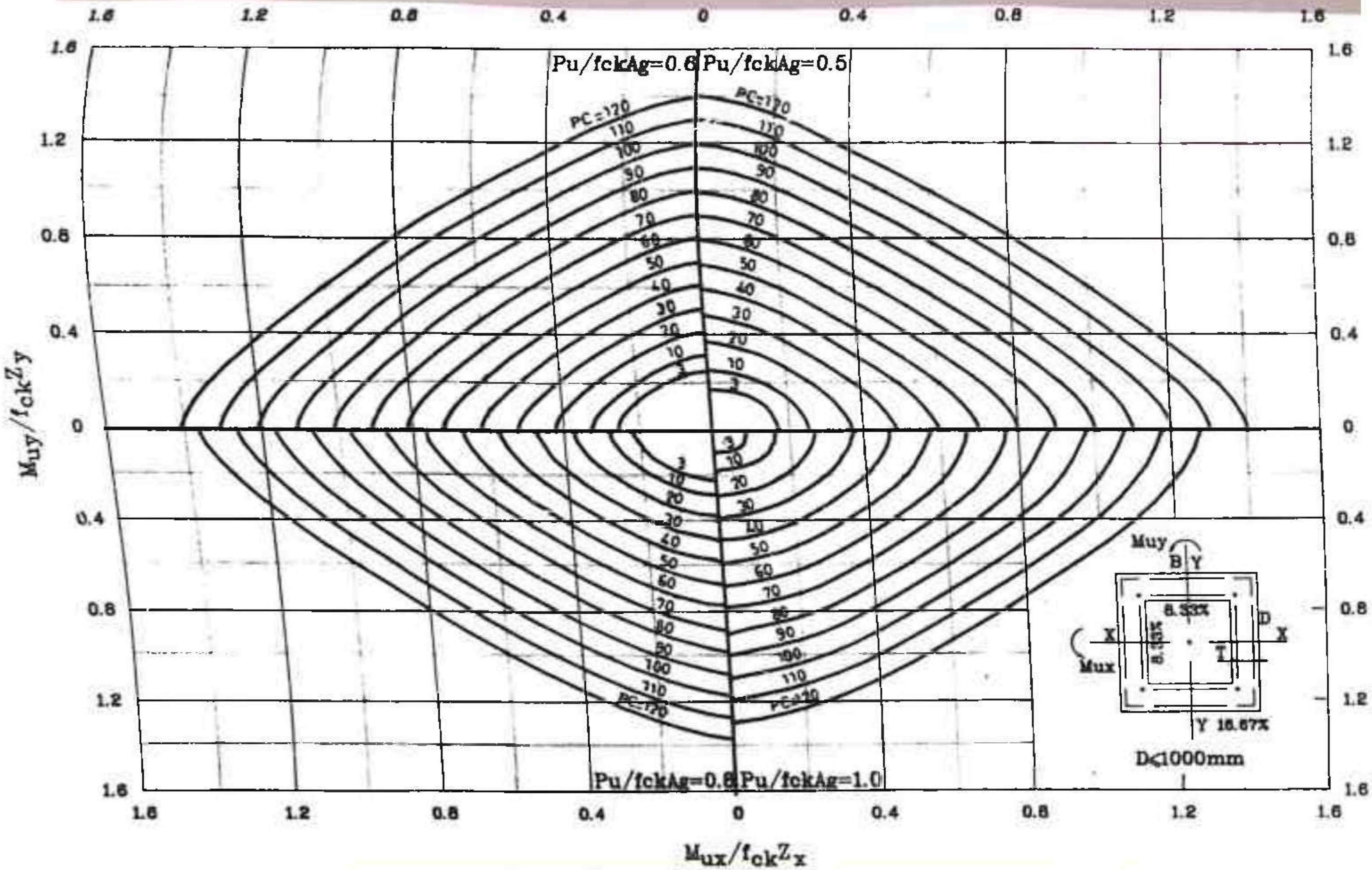

CHART A1·4 DESIGN CHART FOR RECTANGULAR HOLLOW COLUMNS

D/B=1.0 ; d'/D=0.03 ; D/T=7.5

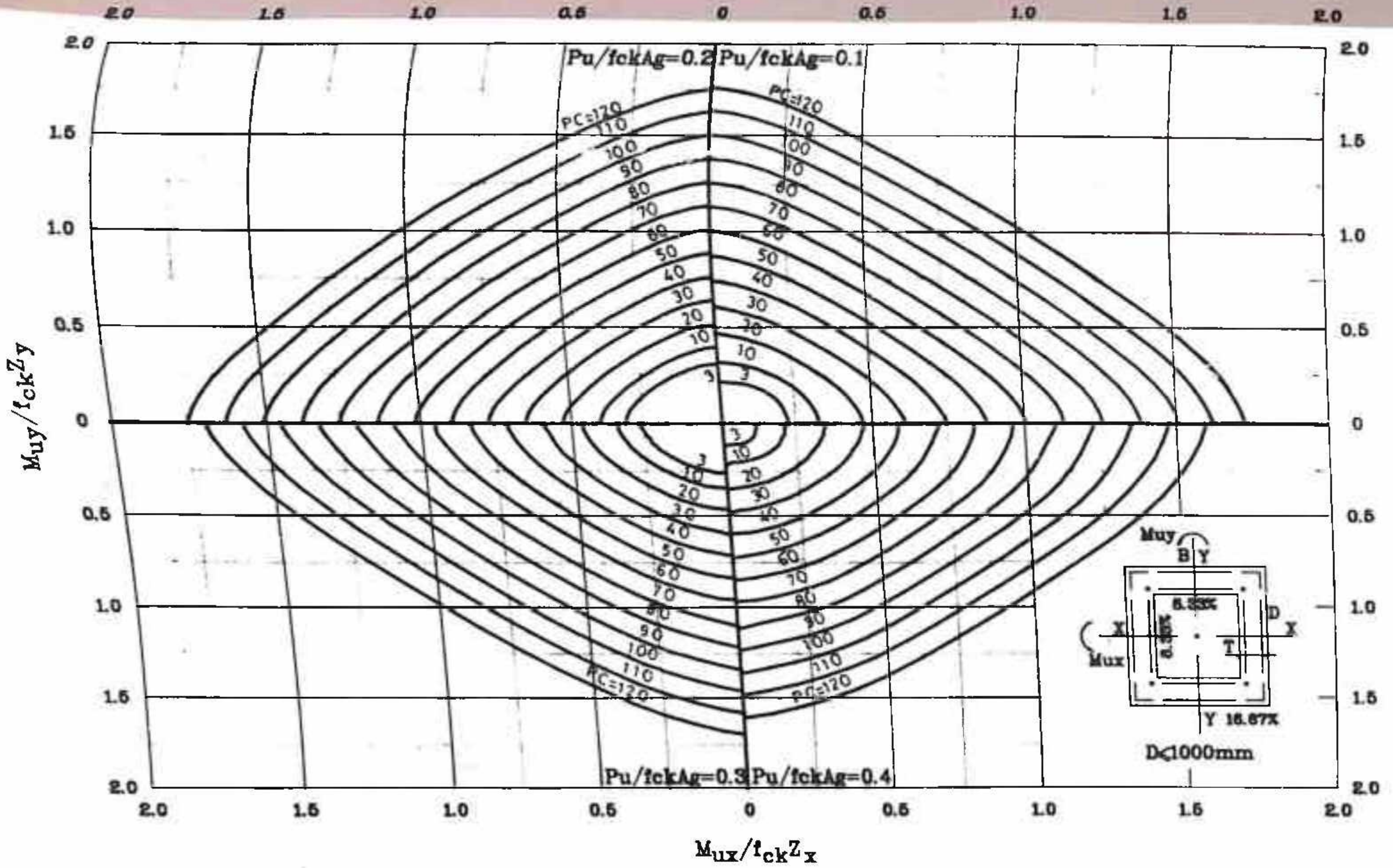

CHART A1·5 DESIGN CHART FOR RECTANGULAR HOLLOW COLUMNS

D/B=1.0 ; d'/D=0.03 ; D/T=10.0

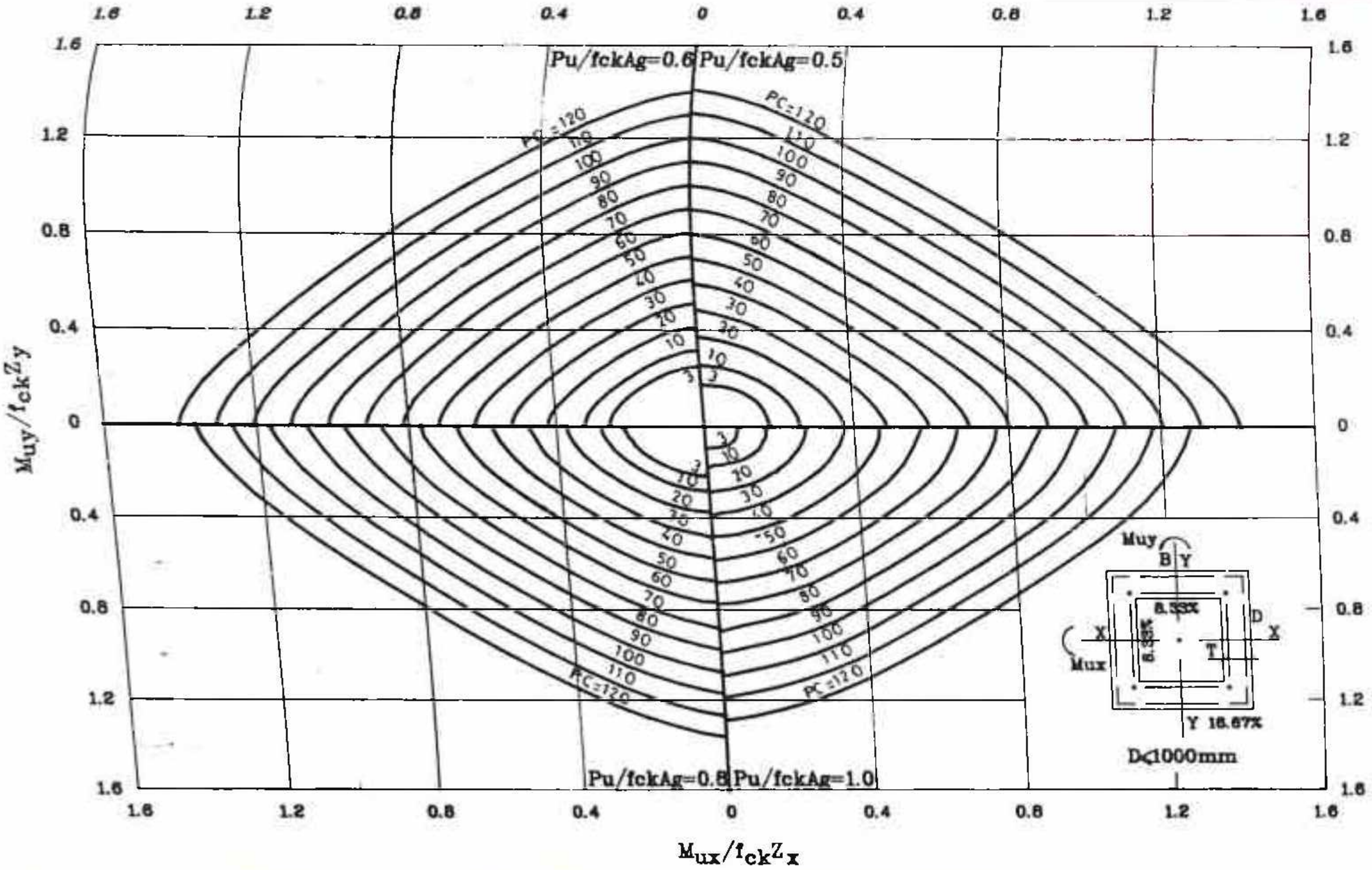

CHART A1·6 DESIGN CHART FOR RECTANGULAR HOLLOW COLUMNS

$D/B=1.0$; $d'/D=0.03$; $D/T=10.0$

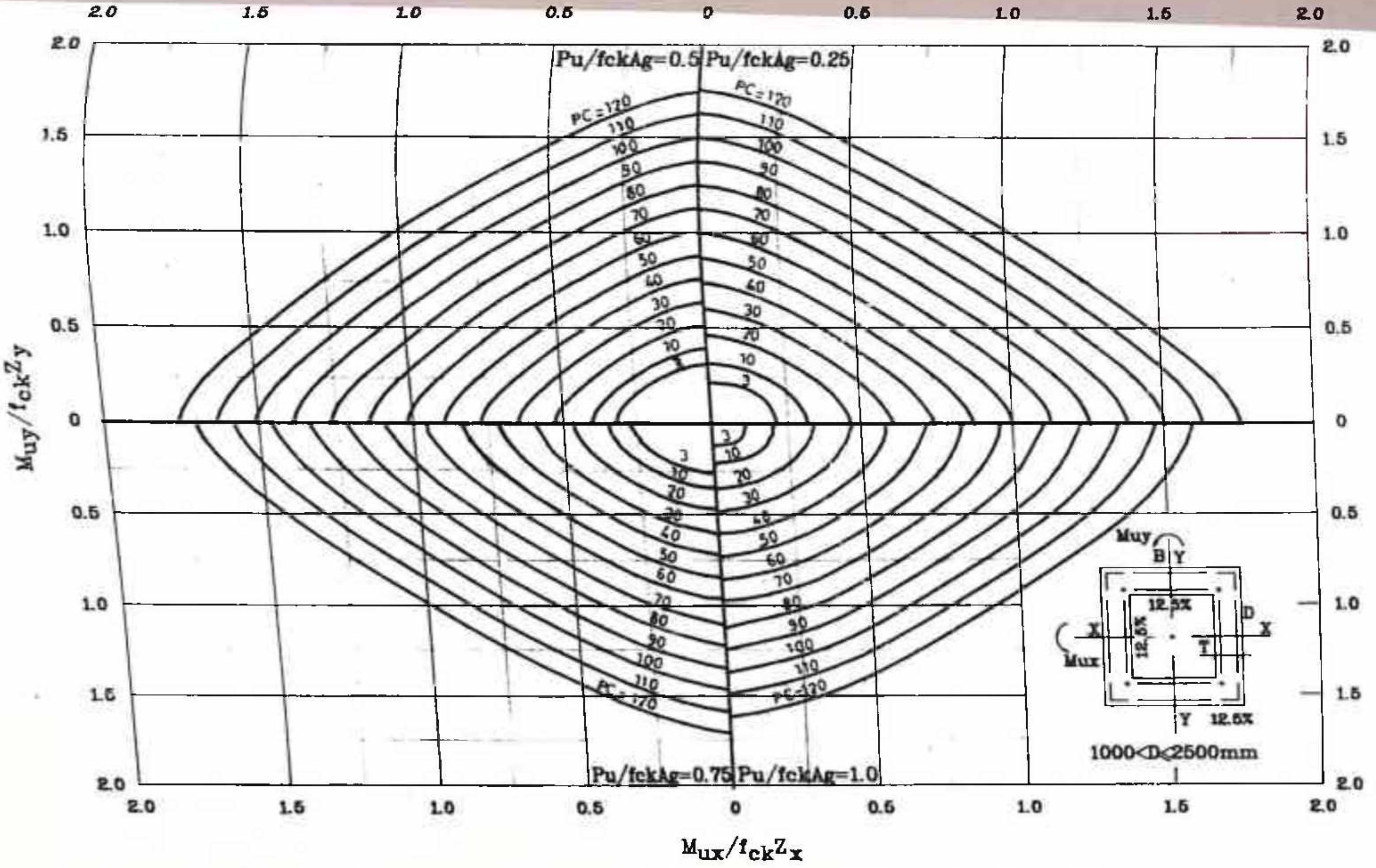

CHART A1·7 DESIGN CHART FOR RECTANGULAR HOLLOW COLUMNS

D/B=1.0 ; d'/D=0.02 ; D/T=10.0

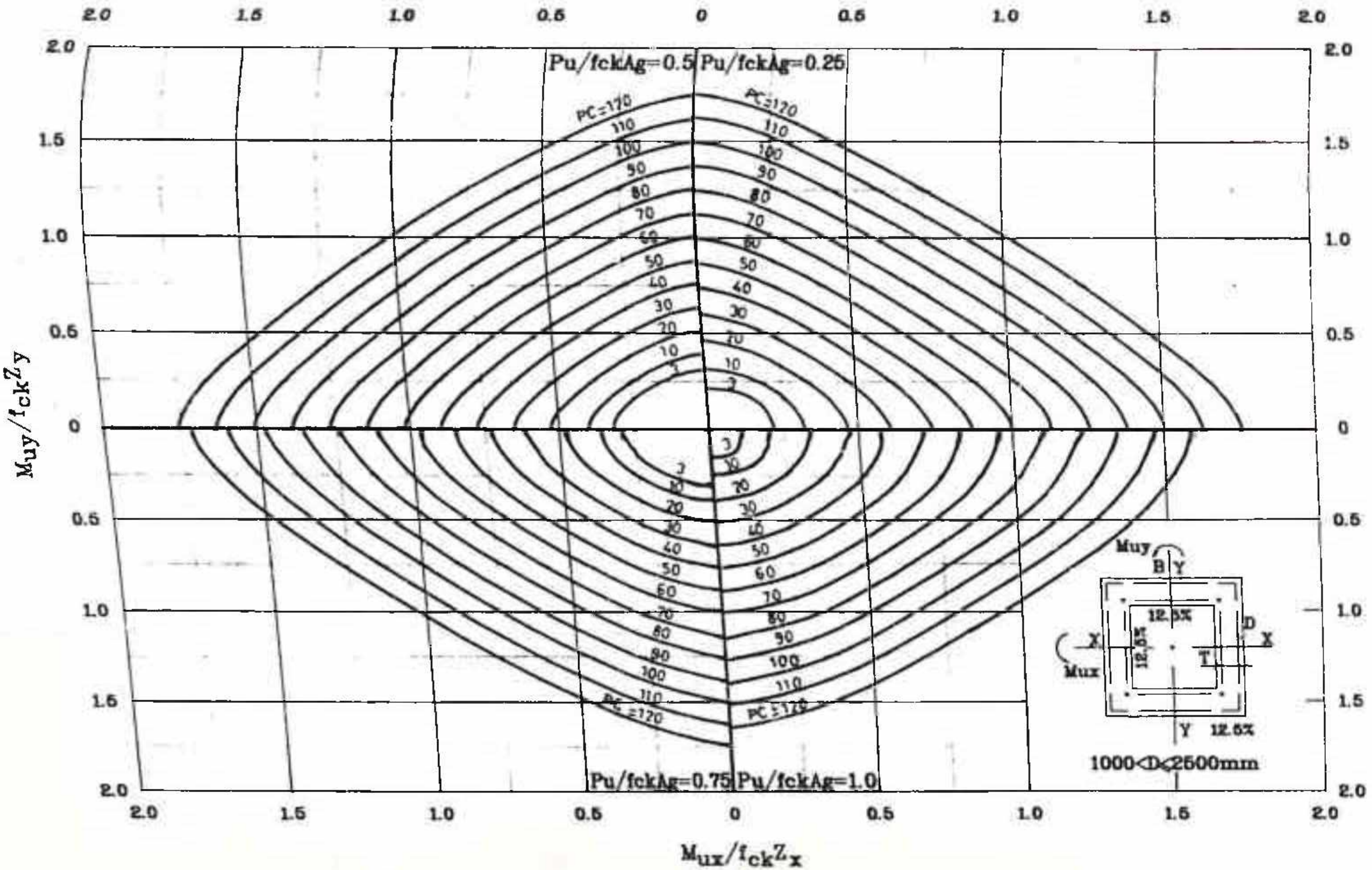

CHART A1·8 DESIGN CHART FOR RECTANGULAR HOLLOW COLUMNS

D/B=1.0 ; d'/D=0.03 ; D/T=7.5

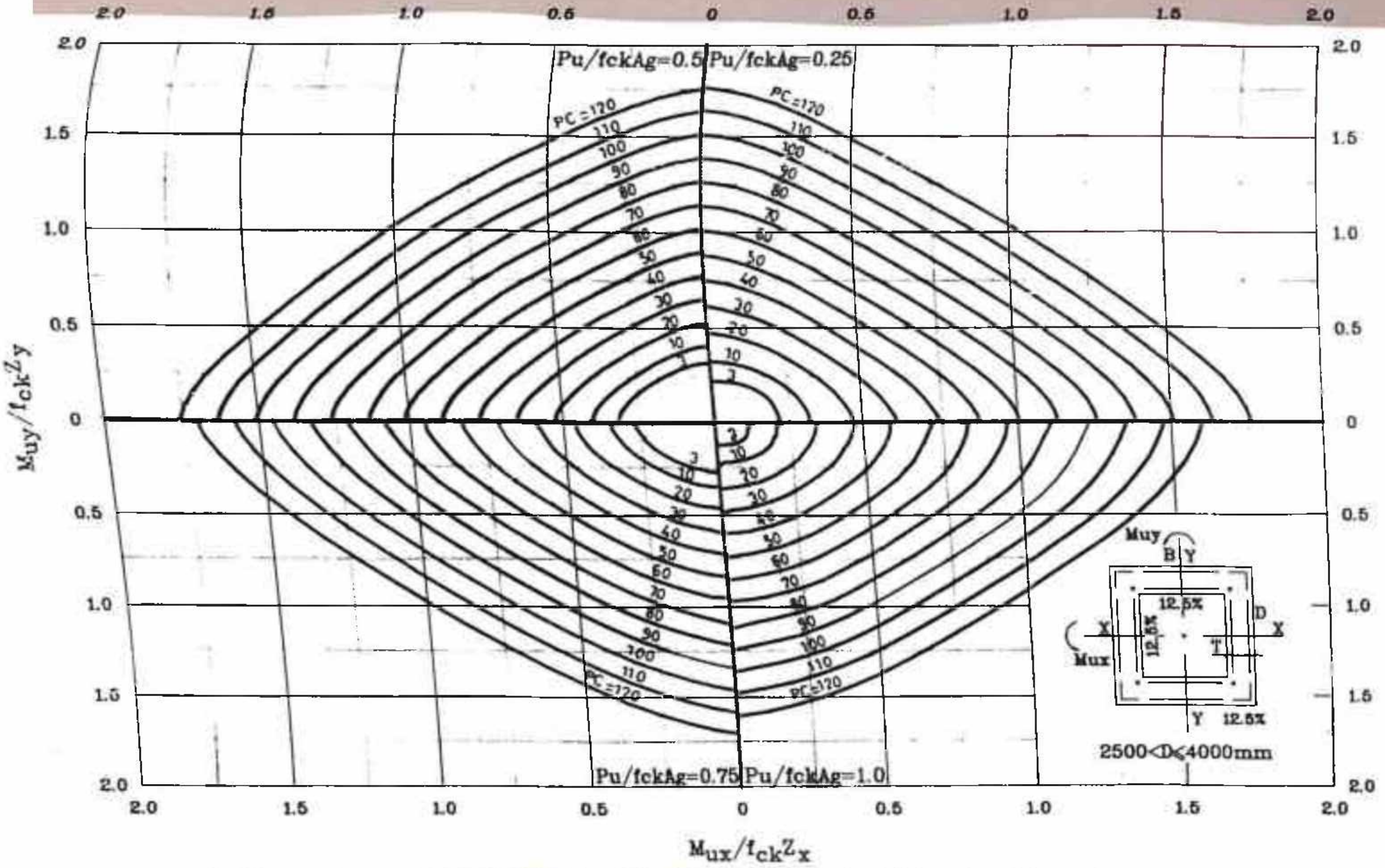

CHART A1-9 DESIGN CHART FOR RECTANGULAR HOLLOW COLUMNS

D/B=1.0 ; d'/D=0.012 ; D/T=10.0

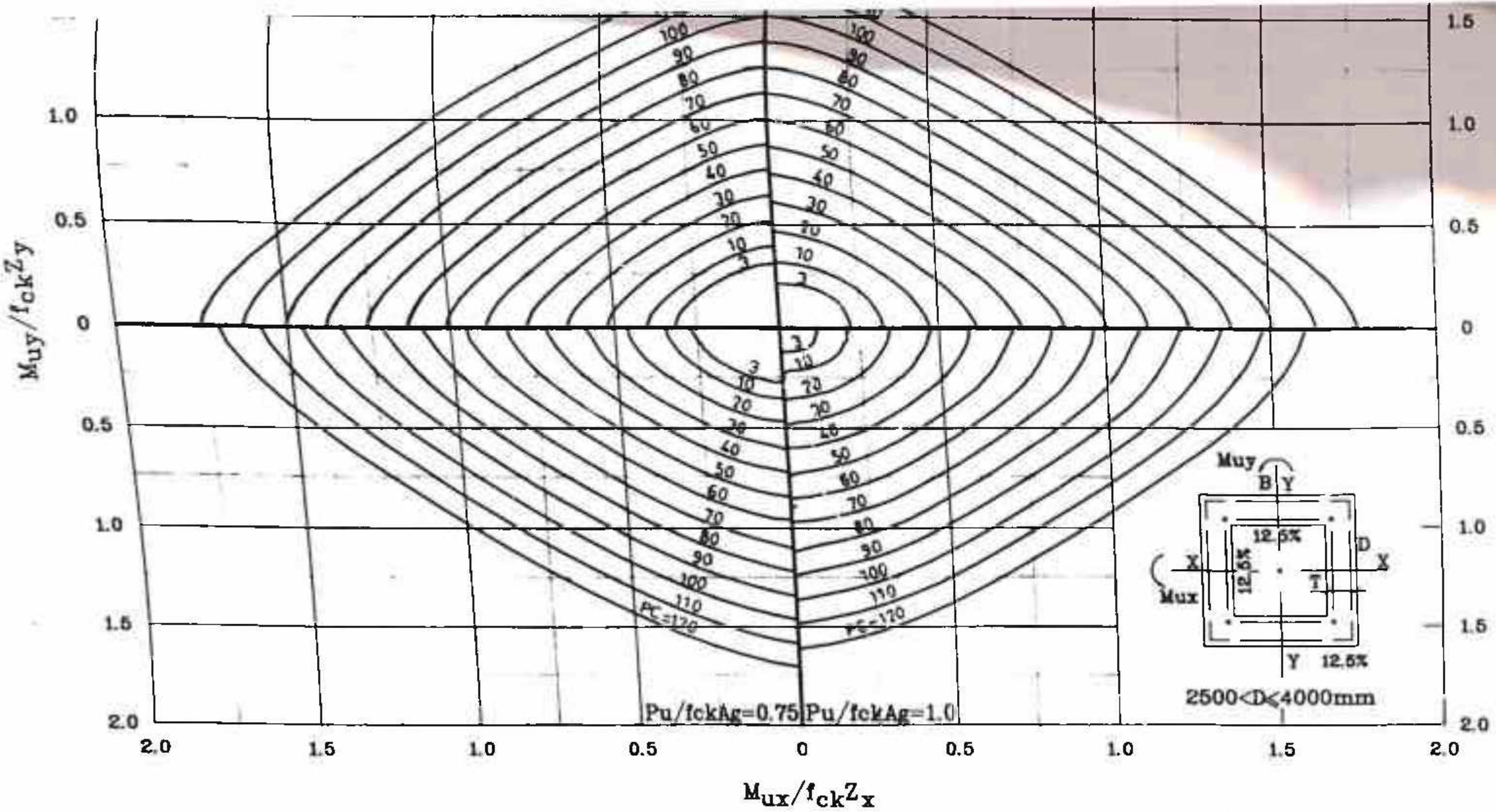

CHART A1·10 DESIGN CHART FOR RECTANGULAR HOLLOW COLUMNS

D/B=1.0 ; d'/D=0.012 ; D/T=15

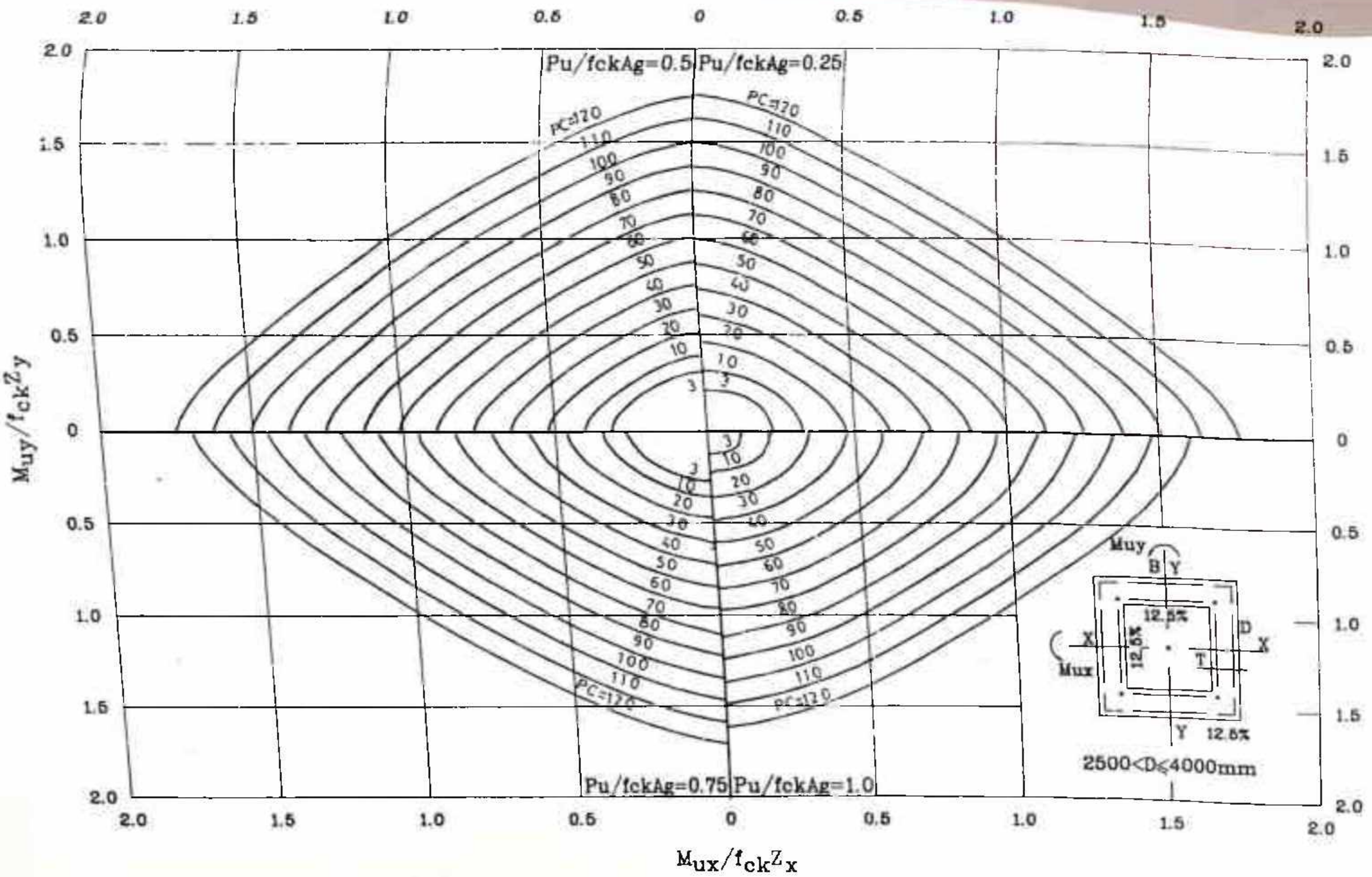

CHART A1·12 DESIGN CHART FOR RECTANGULAR HOLLOW COLUMNS

D/B=1.0 ; d'/D=0.02 ; D/T=10

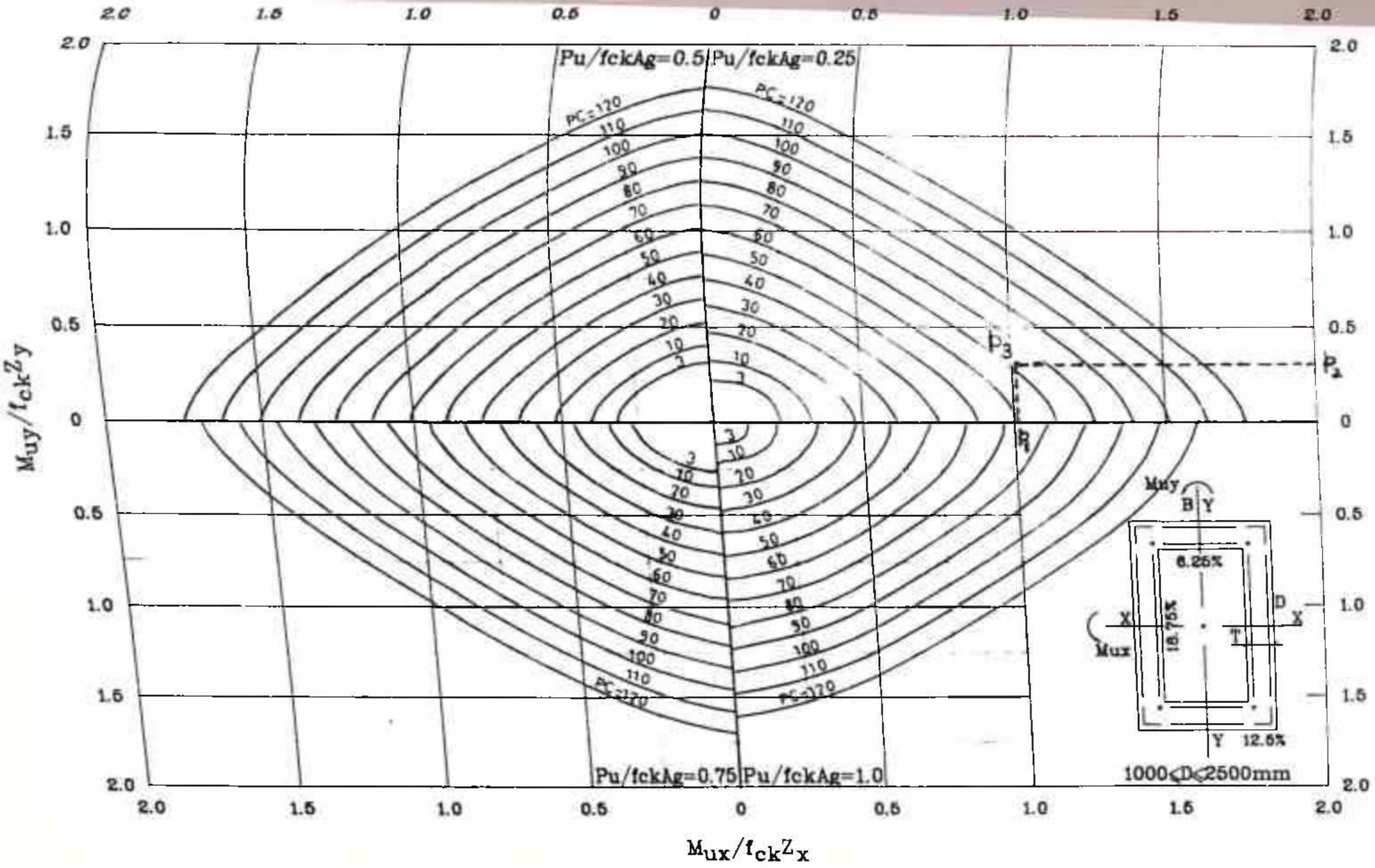

CHART AI·13 DESIGN CHART FOR RECTANGULAR HOLLOW COLUMNS

D/B=1.5 ; d'/D=0.02 ; D/T=10

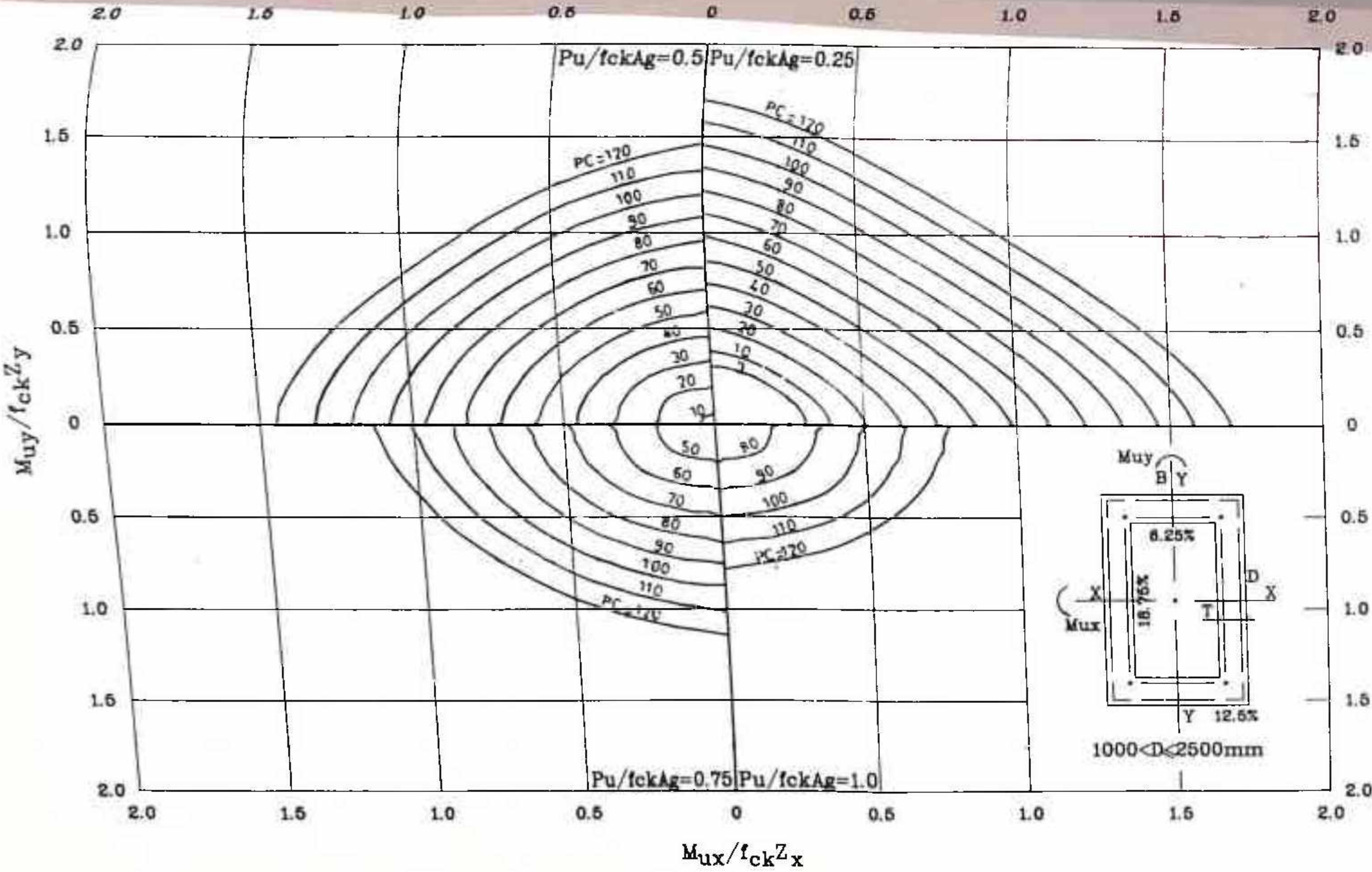

CHART A1·14 DESIGN CHART FOR RECTANGULAR HOLLOW COLUMNS

D/B=1.5 ; d'/D=0.03 ; D/T=7.5

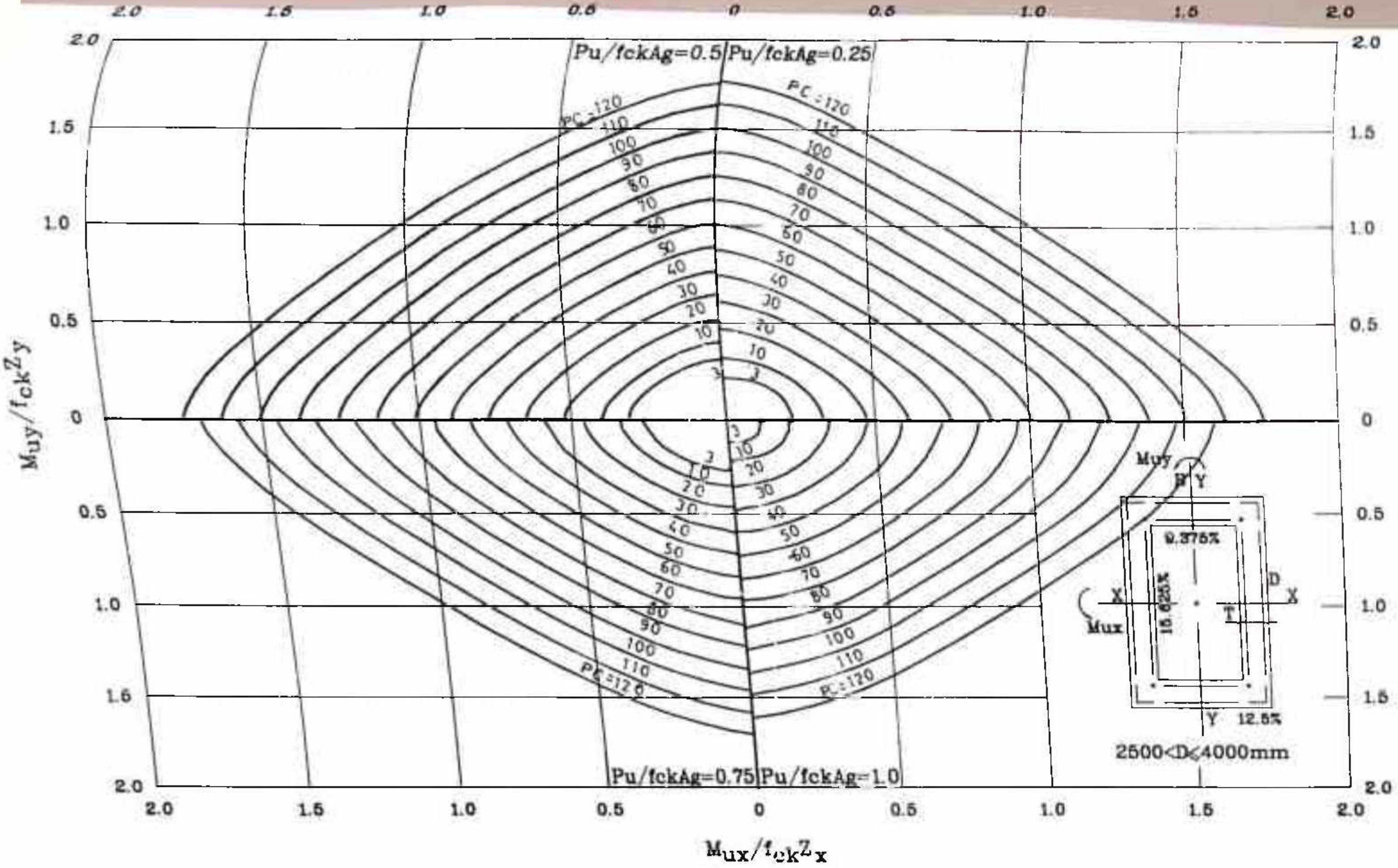

CHART AI·15 DESIGN CHART FOR RECTANGULAR HOLLOW COLUMNS

D/B=1.5 ; d'/D=0.012 ; D/T=10

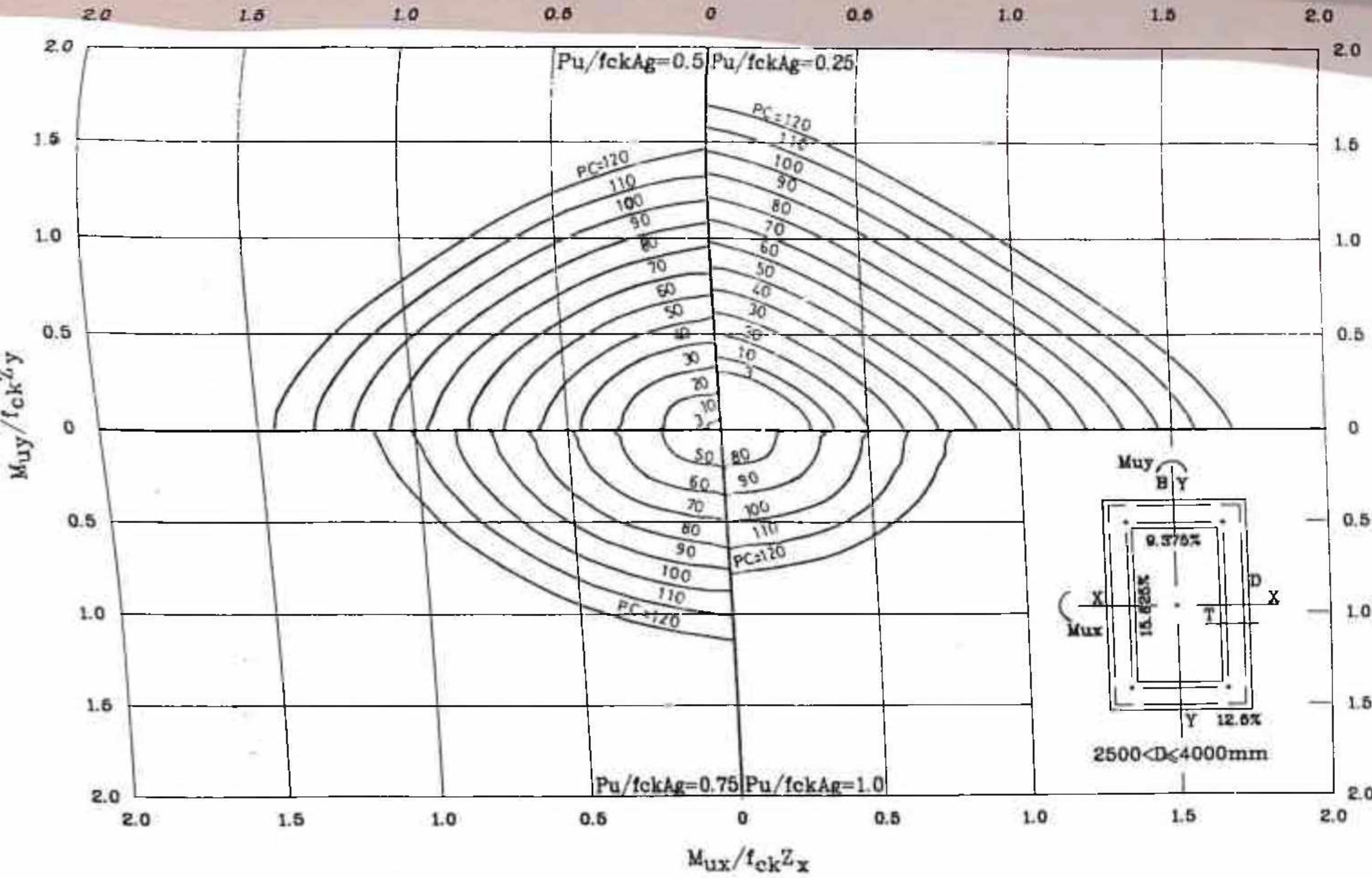

CHART A1-16 DESIGN CHART FOR RECTANGULAR HOLLOW COLUMNS

D/B=1.5 ; d'/D=0.012 ; D/T=15

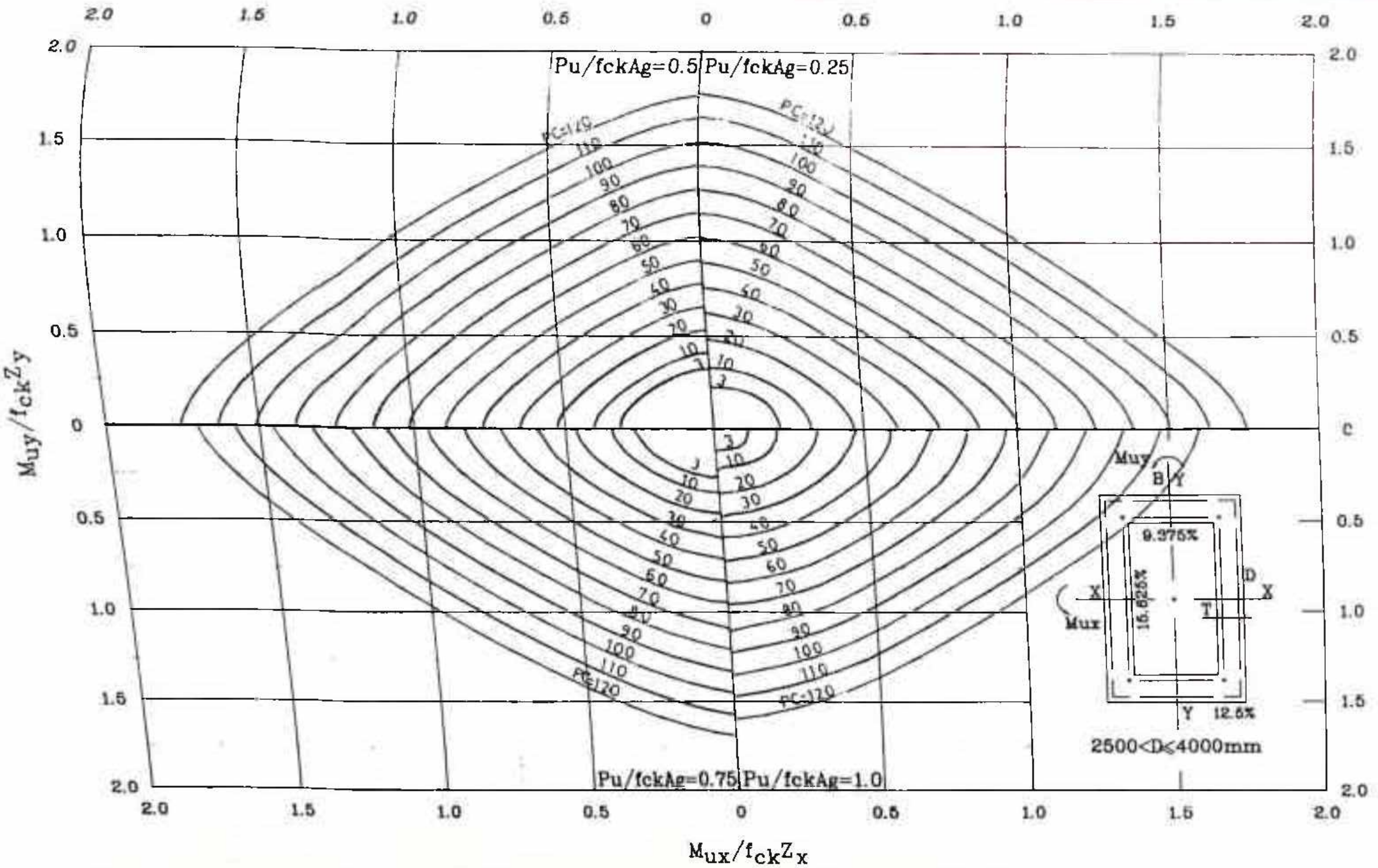

CHART A1.17 DESIGN CHART FOR RECTANGULAR HOLLOW COLUMNS

D/B=1.5 ; d'/D=0.02 ; D/T=7.5

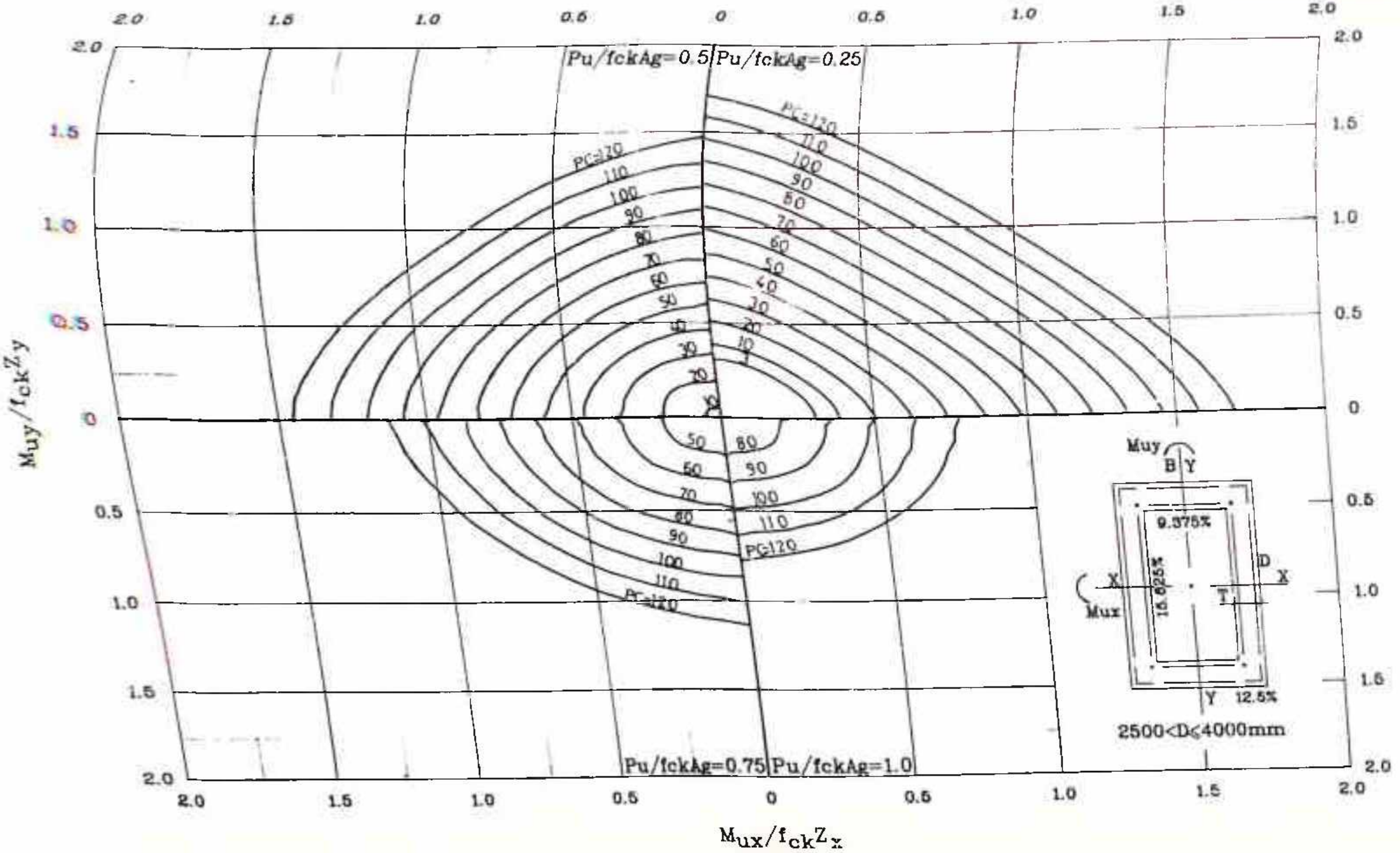

CHART A1-18 DESIGN CHART FOR RECTANGULAR HOLLOW COLUMNS

D/B=1.5 ; d'/D=0.02 ; D/T=10

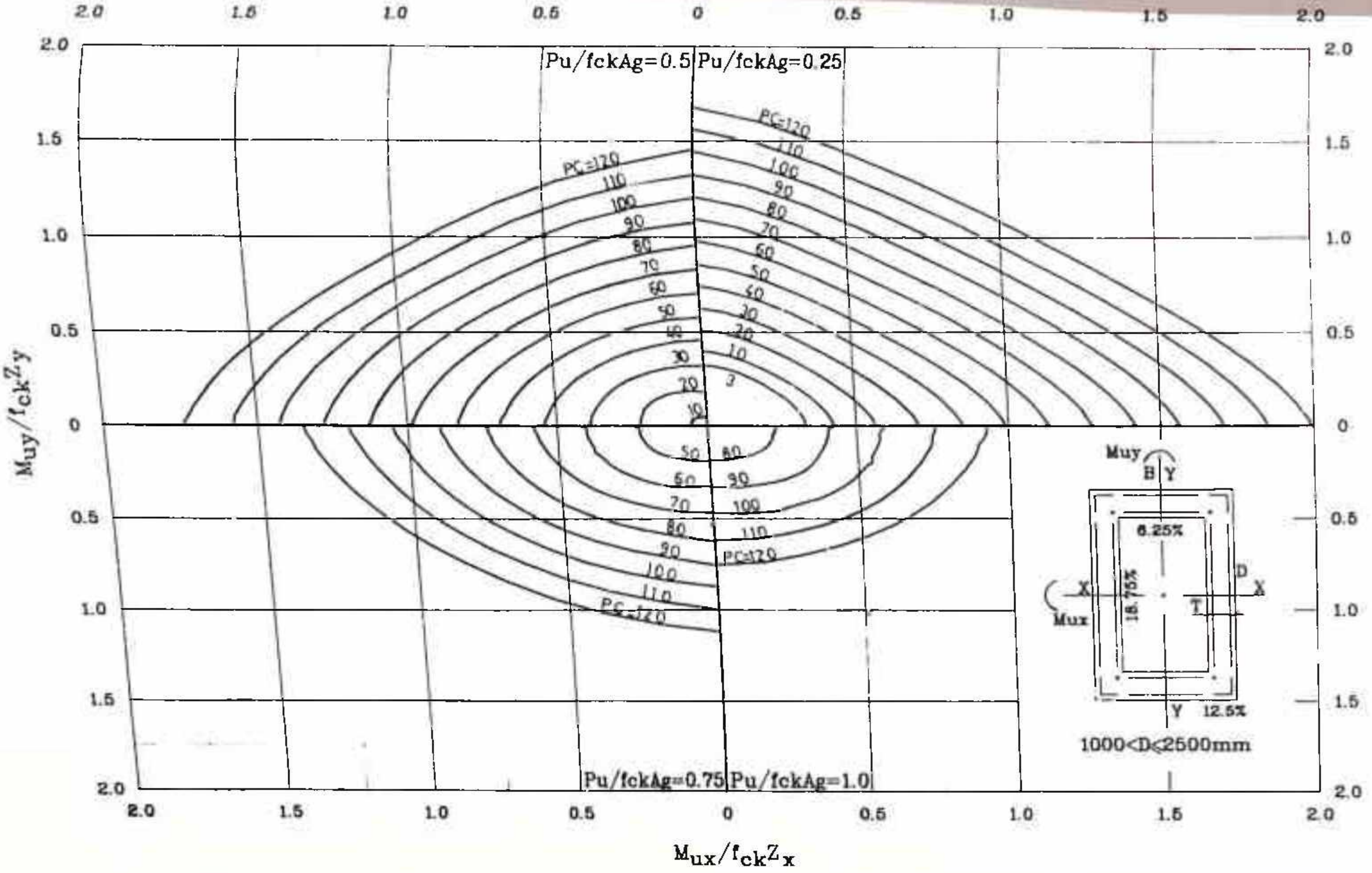

CHART A1.19 DESIGN CHART FOR RECTANGULAR HOLLOW COLUMNS

D/B=2.0 ; d'/D=0.02 ; D/T=7.5

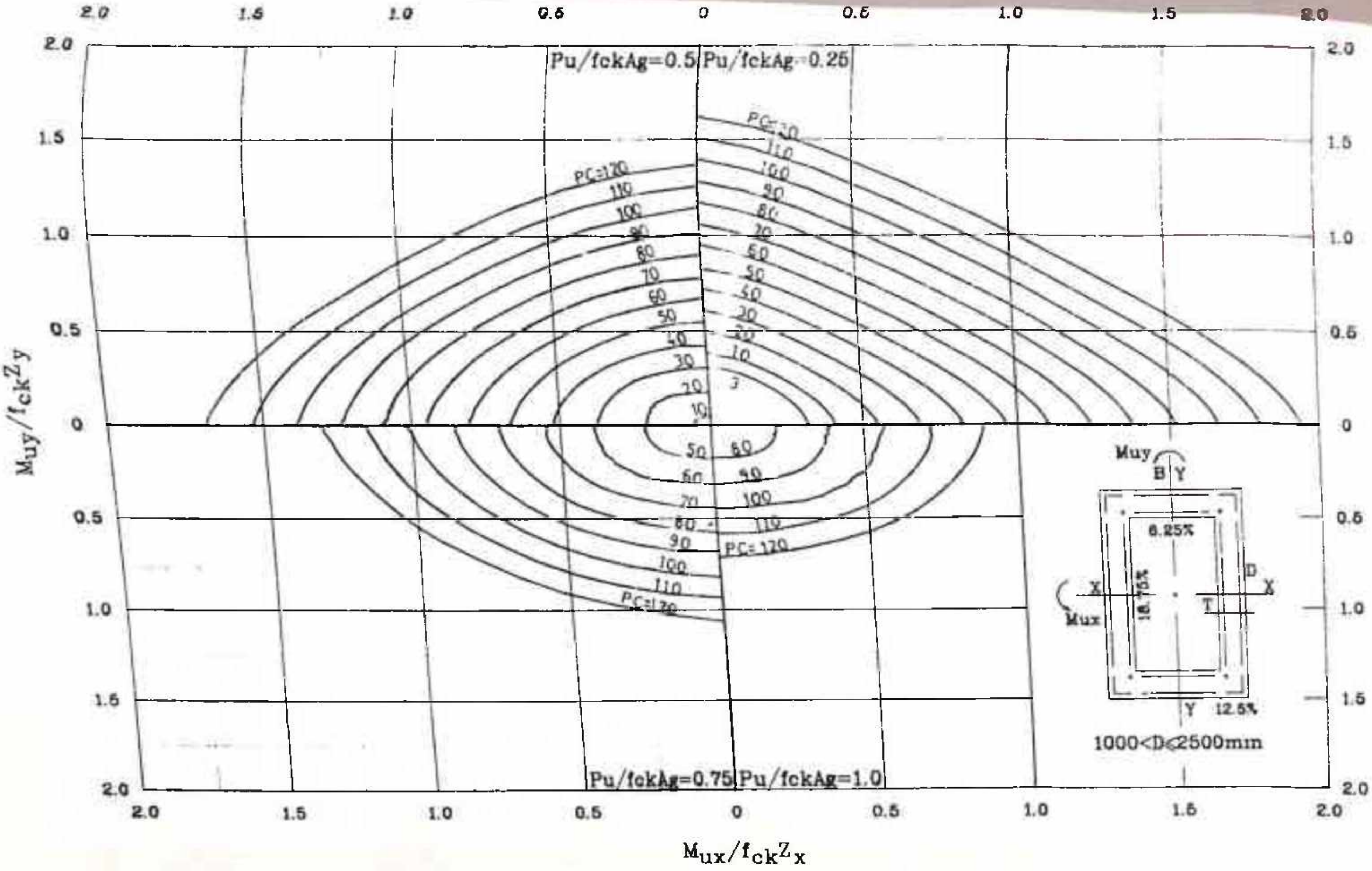

CHART A1·20 DESIGN CHART FOR RECTANGULAR HOLLOW COLUMNS

D/B=2.0 ; d'/D=0.02 ; D/T=10

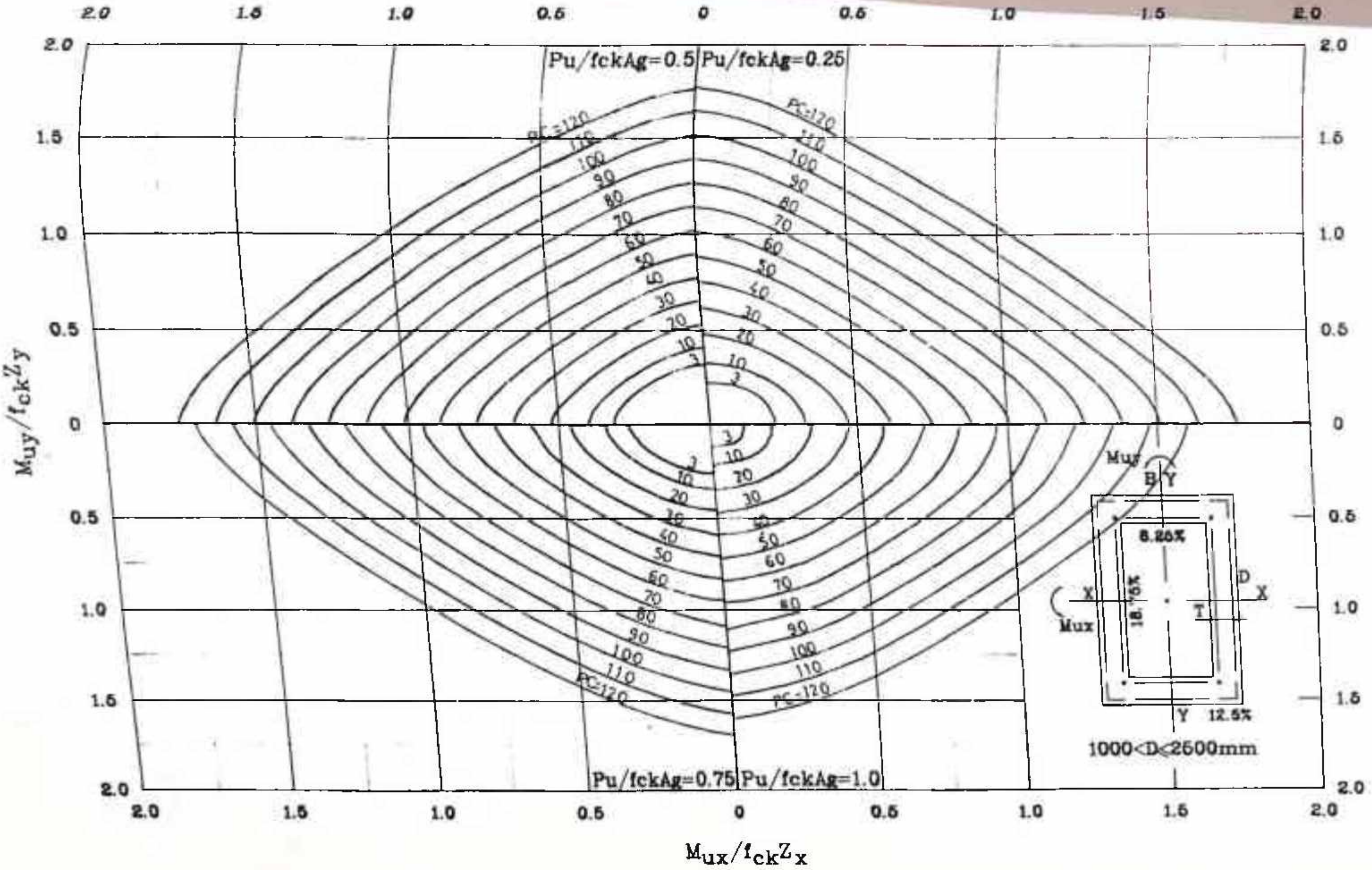

CHART A1·21 DESIGN CHART FOR RECTANGULAR HOLLOW COLUMNS

D/B=2.0 ; d'/D=0.03 ; D/T=7.5

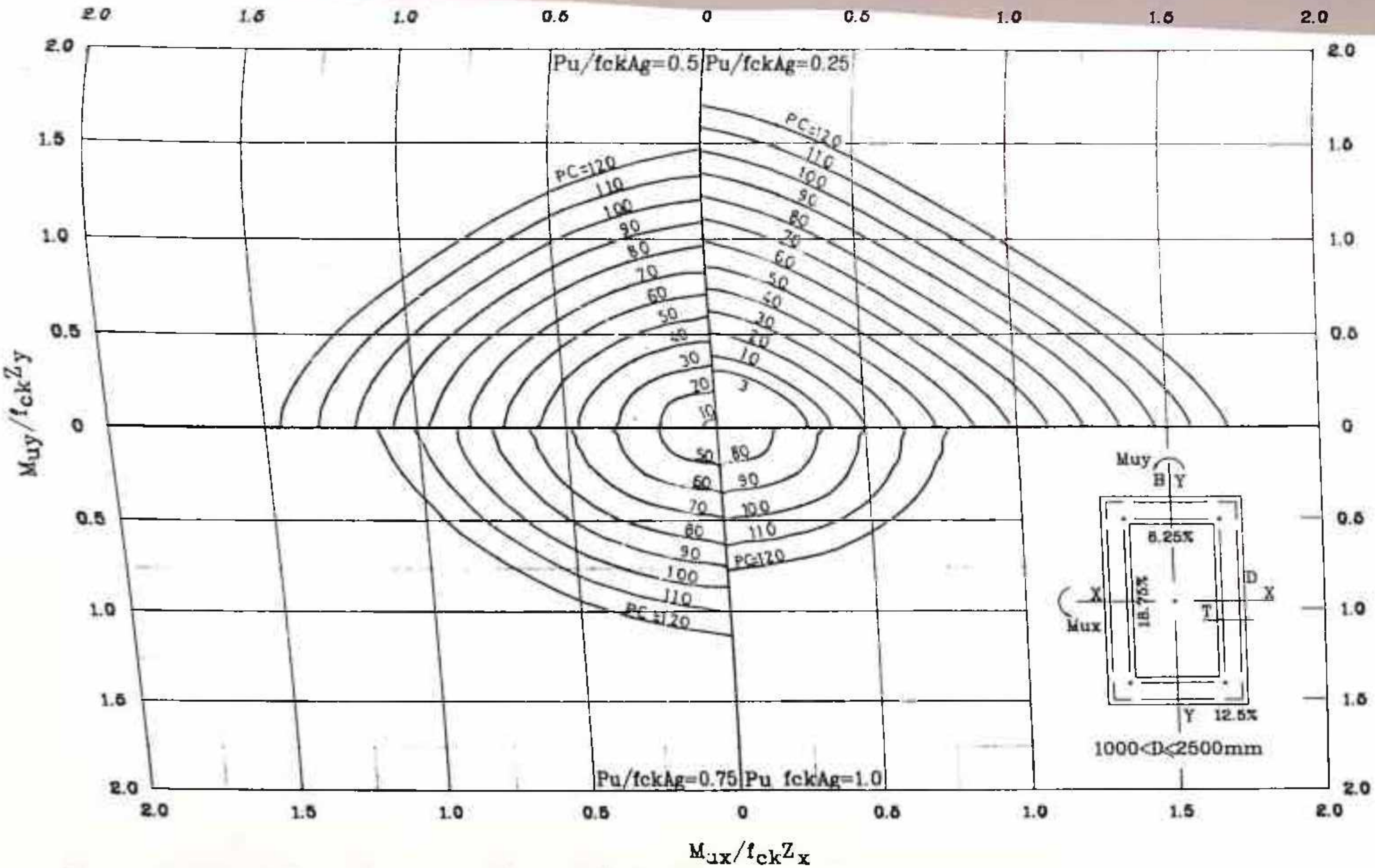

CHART A1·2 2 DESIGN CHART FOR RECTANGULAR HOLLOW COLUMNS

D/B=2.0 ; d'/D=0.03 ; D/T=10

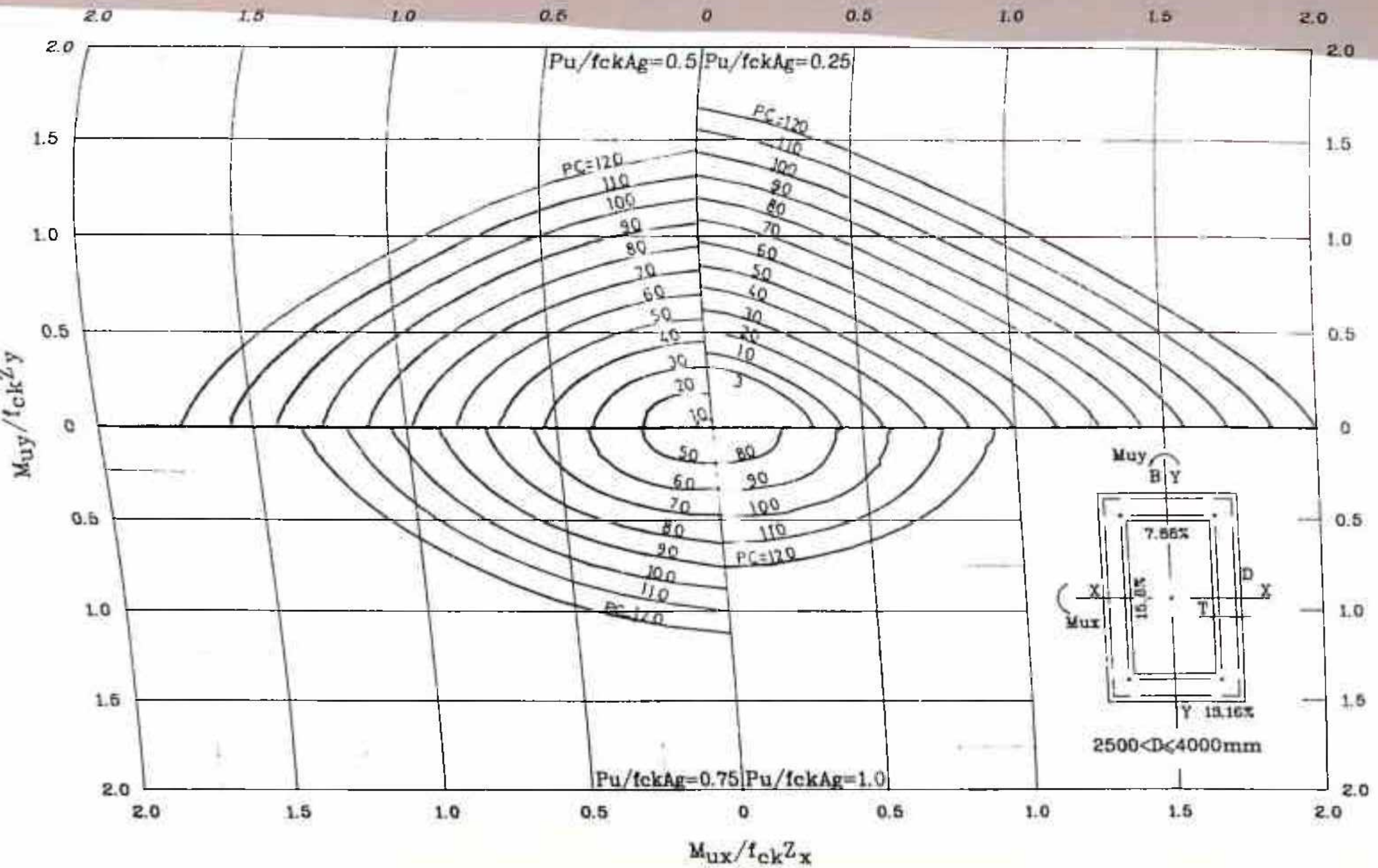

CHART A1·23 DESIGN CHART FOR RECTANGULAR HOLLOW COLUMNS

D/B=2.0 ; d'/D=0.012 ; D/T=10

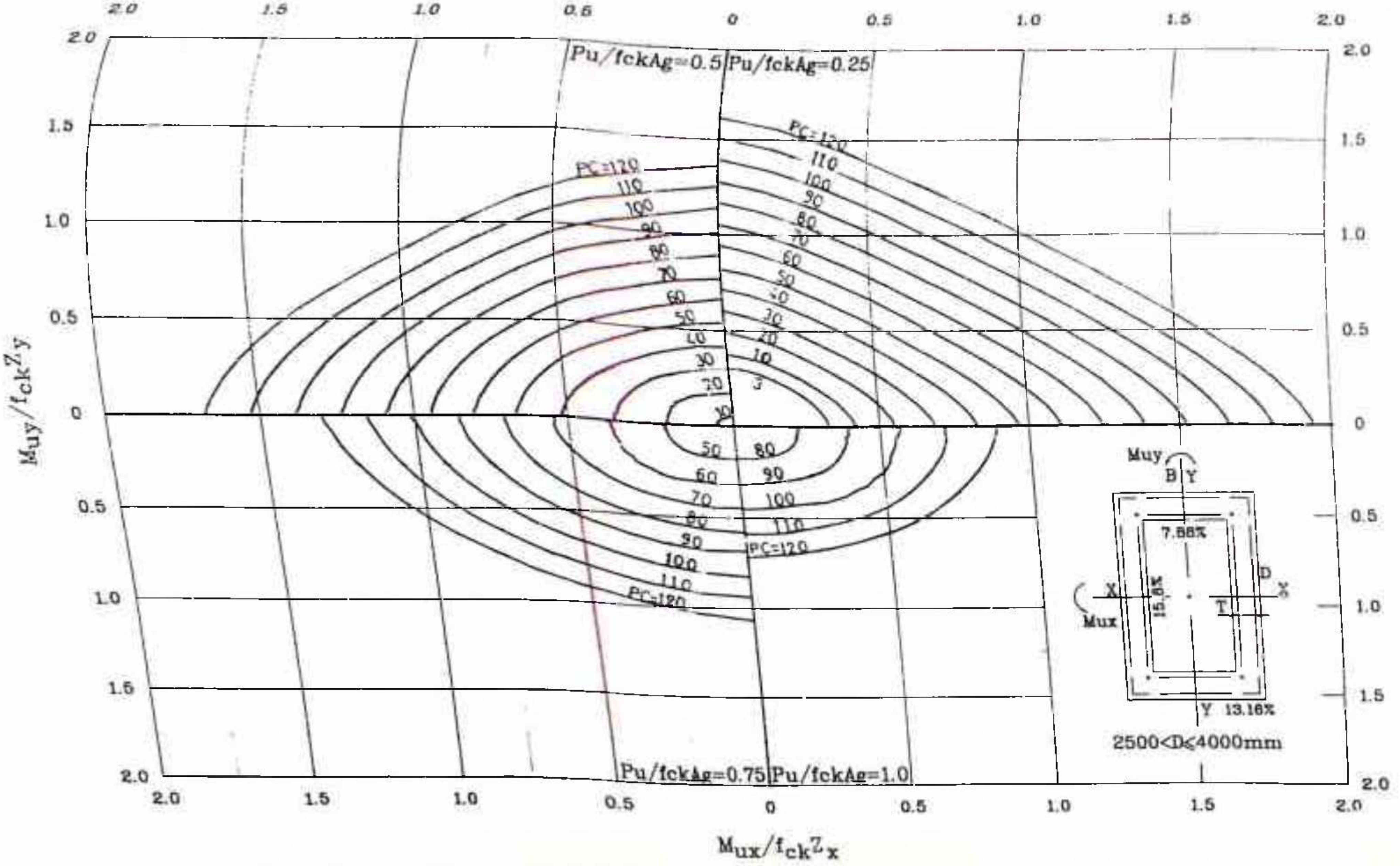

CHART A1·24 DESIGN CHART FOR RECTANGULAR HOLLOW COLUMNS

D/B=2.0 ; d'/D=0.012 ; D/T=15

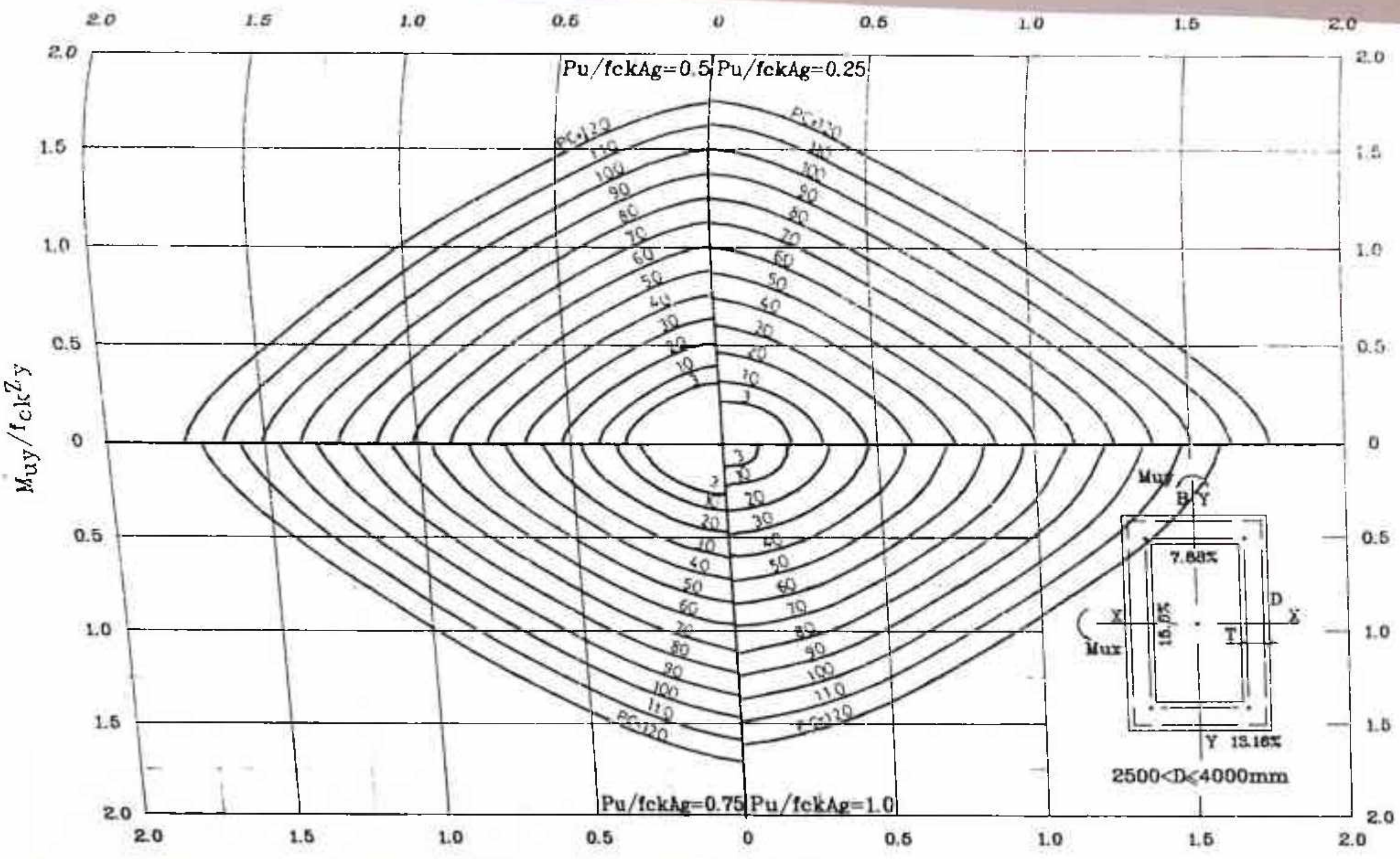

CHART A1·2.5 DESIGN CHART FOR RECTANGULAR HOLLOW COLUMNS

D/B=2.0 ; d'/D=0.02 ; D/T=7.5

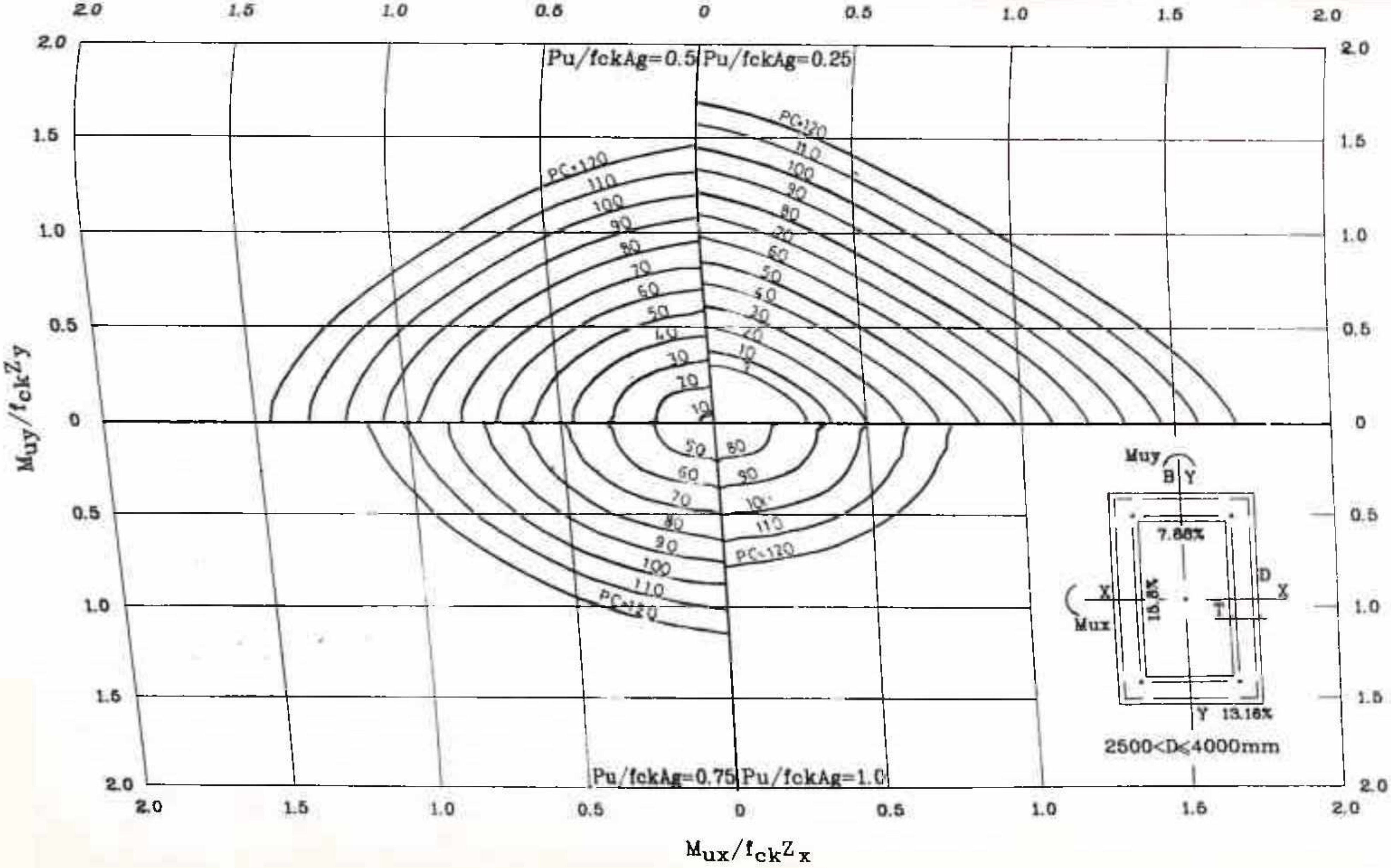

CHART A1·26 DESIGN CHART FOR RECTANGULAR HOLLOW COLUMNS

D/B=2.0 ; d'/D=0.02 ; D/T=10

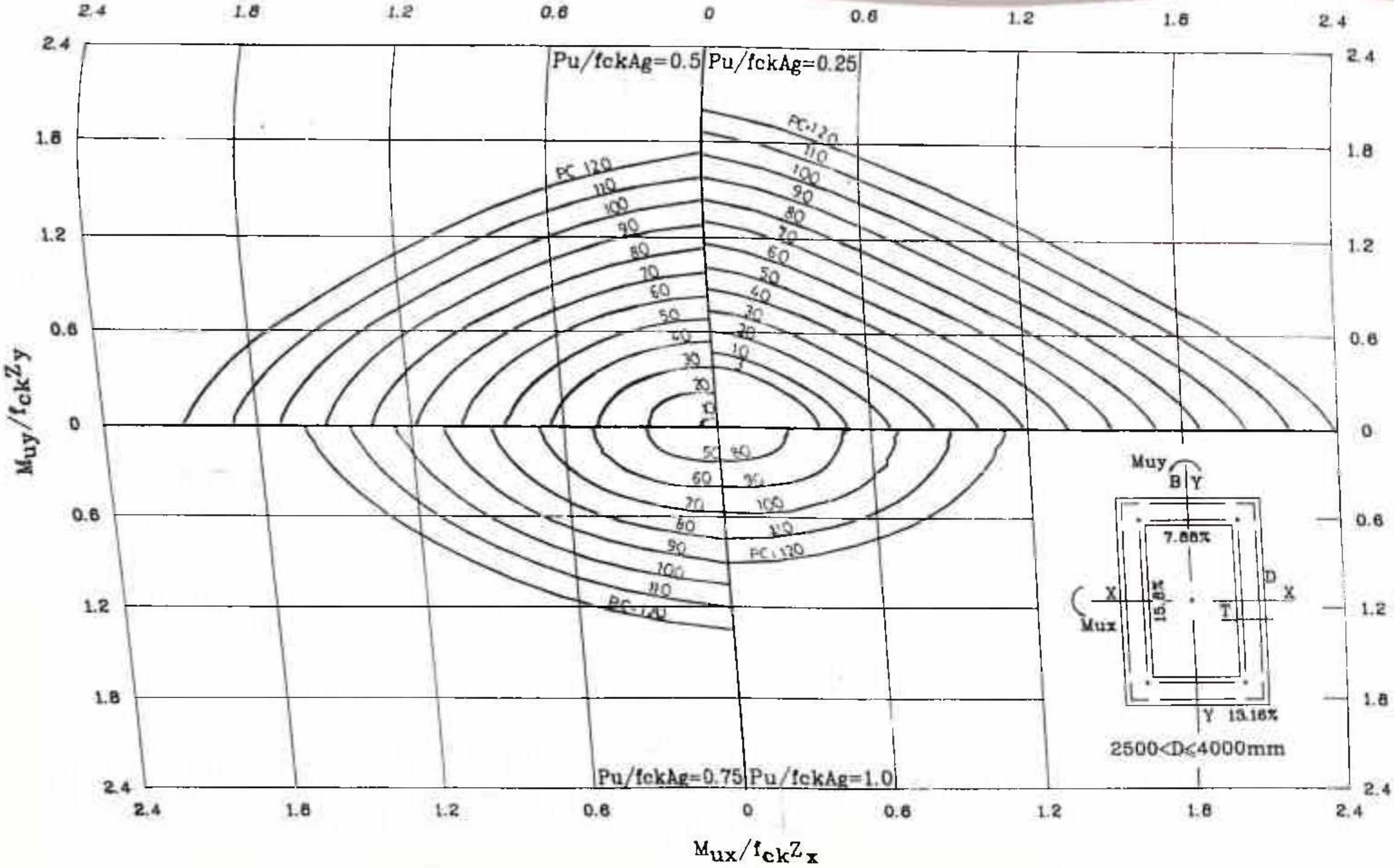

CHART A1·27 DESIGN CHART FOR RECTANGULAR HOLLOW COLUMNS

D/B=3.0 ; d'/D=0.012 ; D/T=15

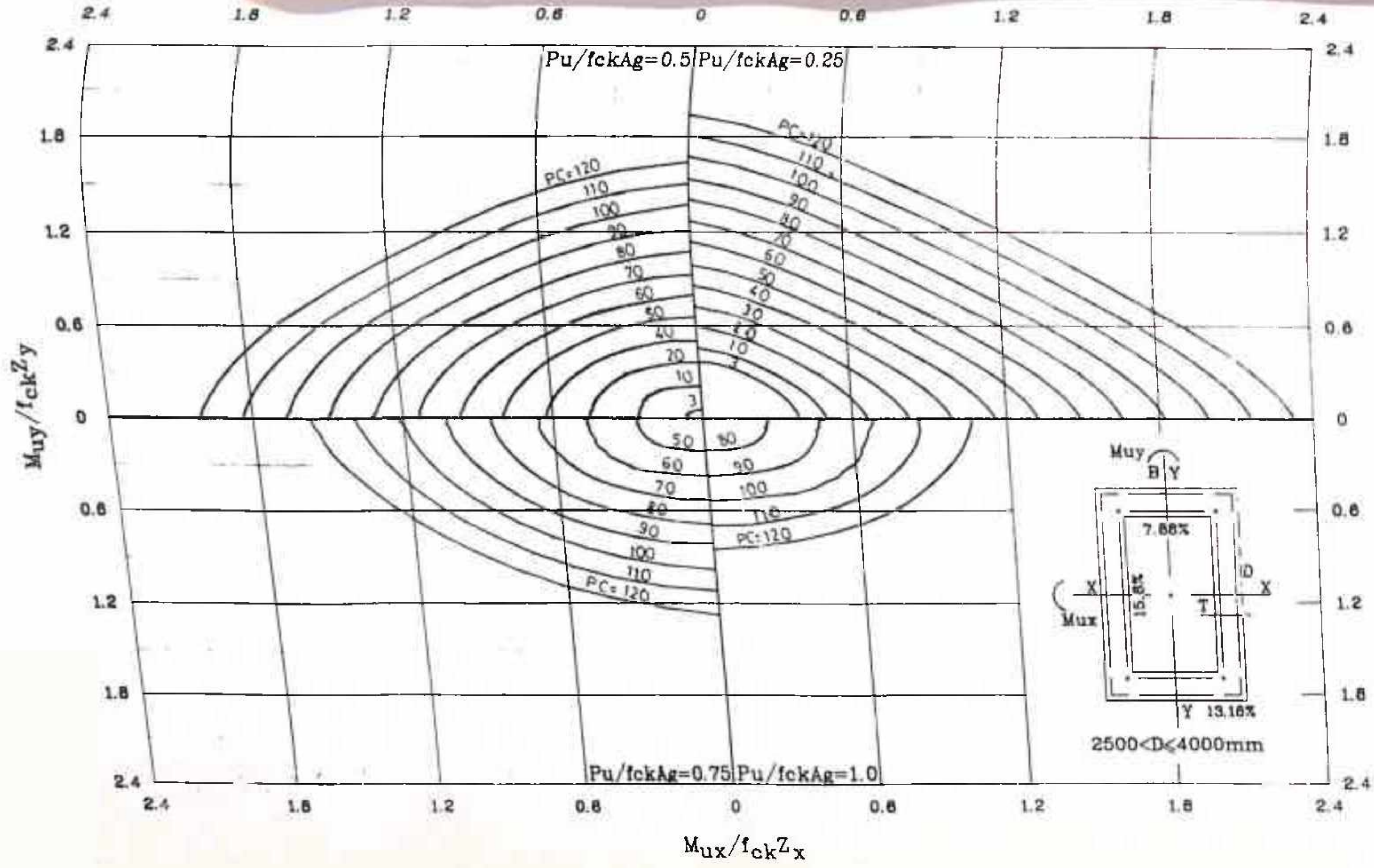

CHART A1·28 DESIGN CHART FOR RECTANGULAR HOLLOW COLUMNS

D/B=3.0 ; d'/D=0.02 ; D/T=7.5

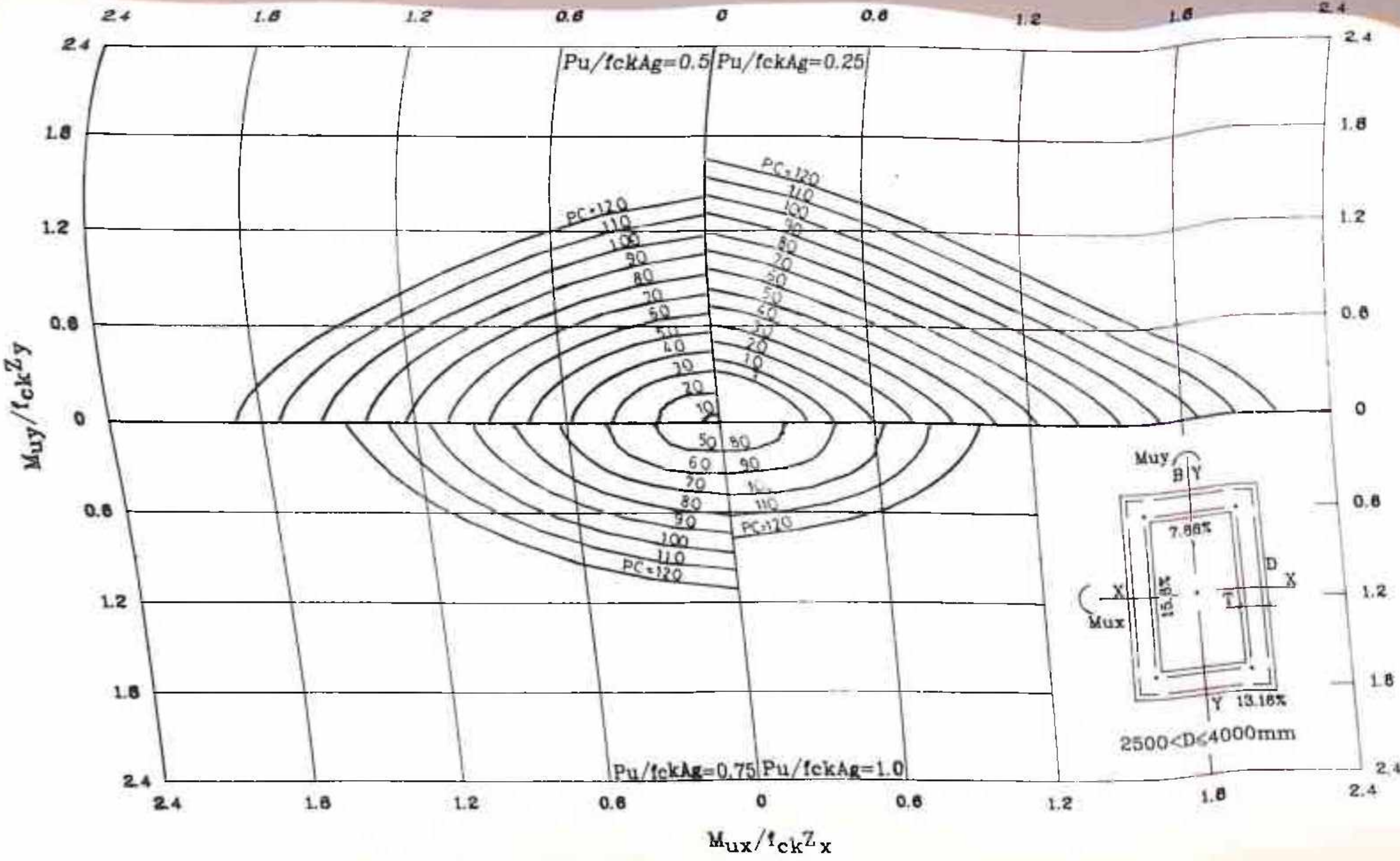

CHART A1·29 DESIGN CHART FOR RECTANGULAR HOLLOW COLUMNS

D/B=3.0 ; d'/D=0.02 ; D/T=10.0

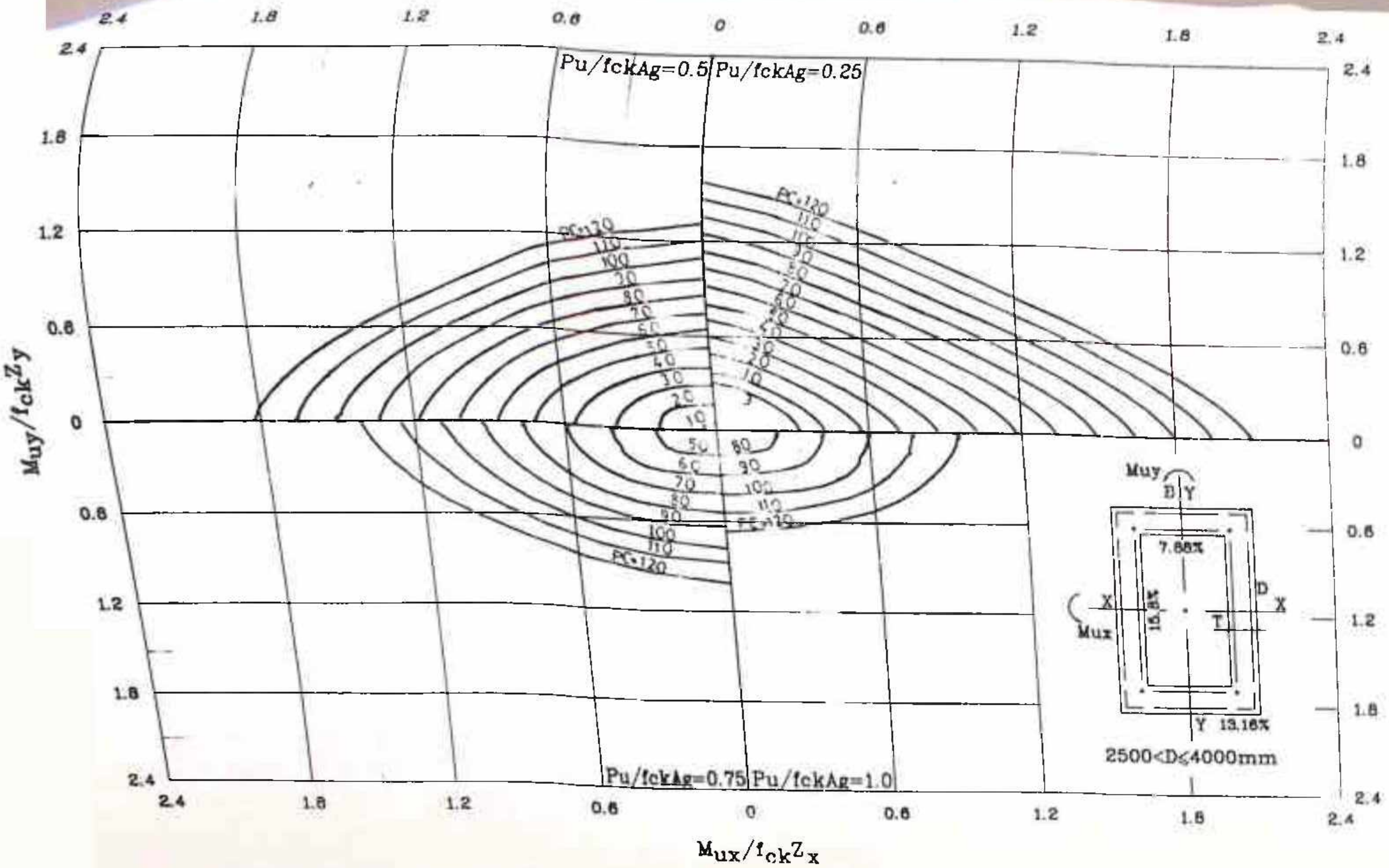

CHART A1.30 DESIGN CHART FOR RECTANGULAR HOLLOW COLUMNS

D/B=3.0 ; d'/D=0.02 ; D/T=15.0

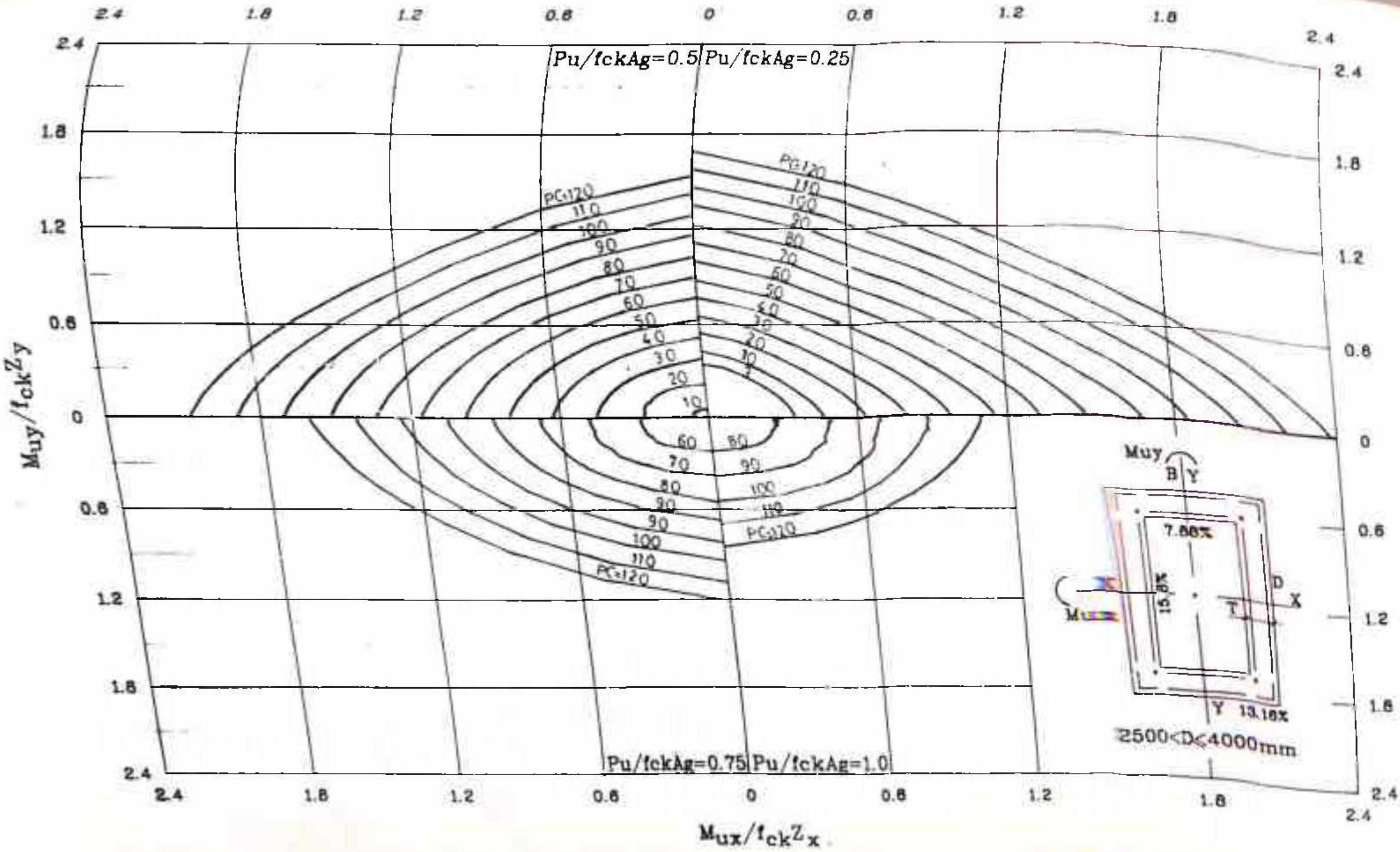

CHART A1·31 DESIGN CHART FOR RECTANGULAR HOLLOW COLUMNS

D/B=4.0 ; d'/D=0.012 ; D/T=10.0

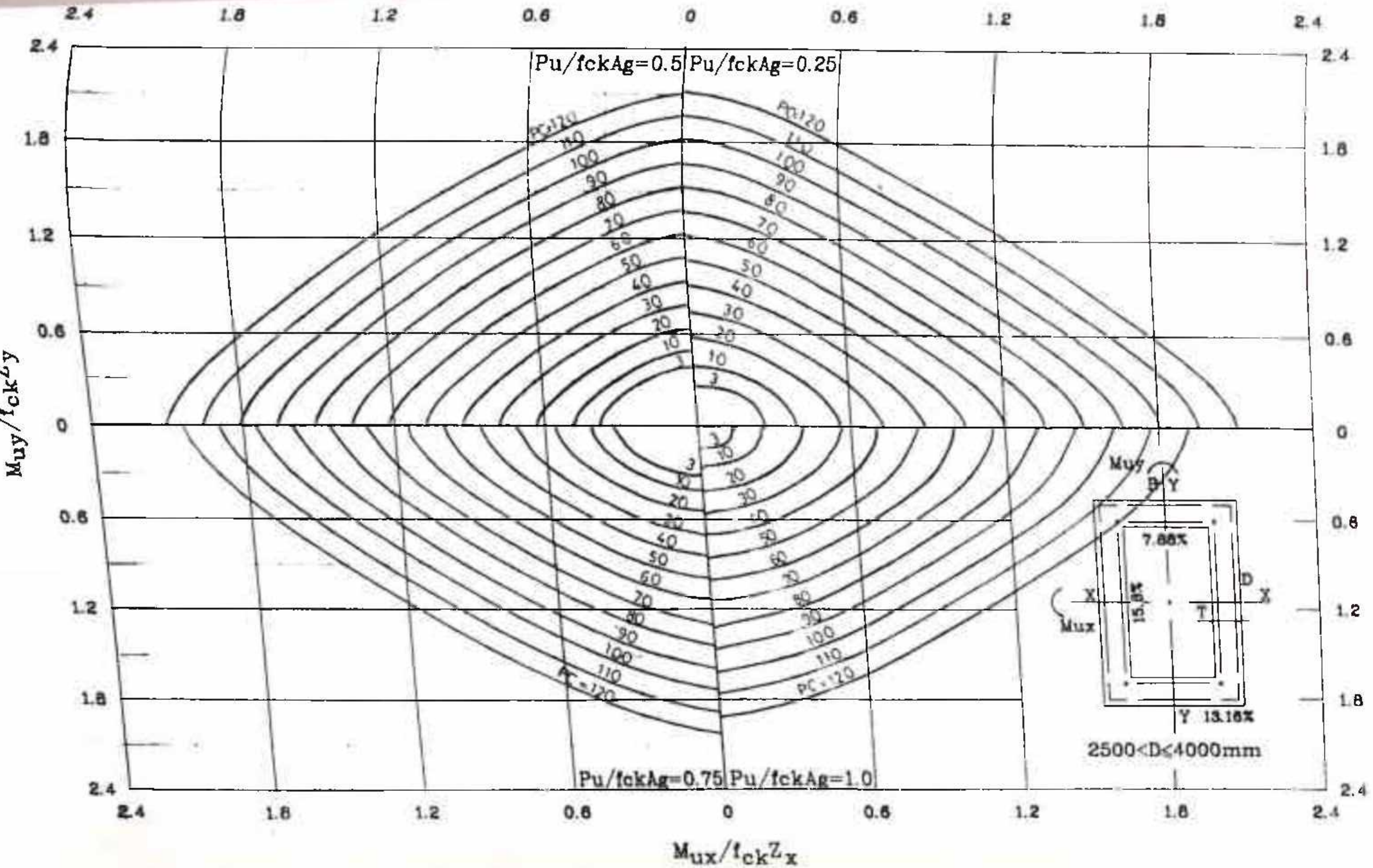

CHART A1·32 DESIGN CHART FOR RECTANGULAR HOLLOW COLUMNS

D/B=4.0 ; d'/D=0.012 ; D/T=15.0

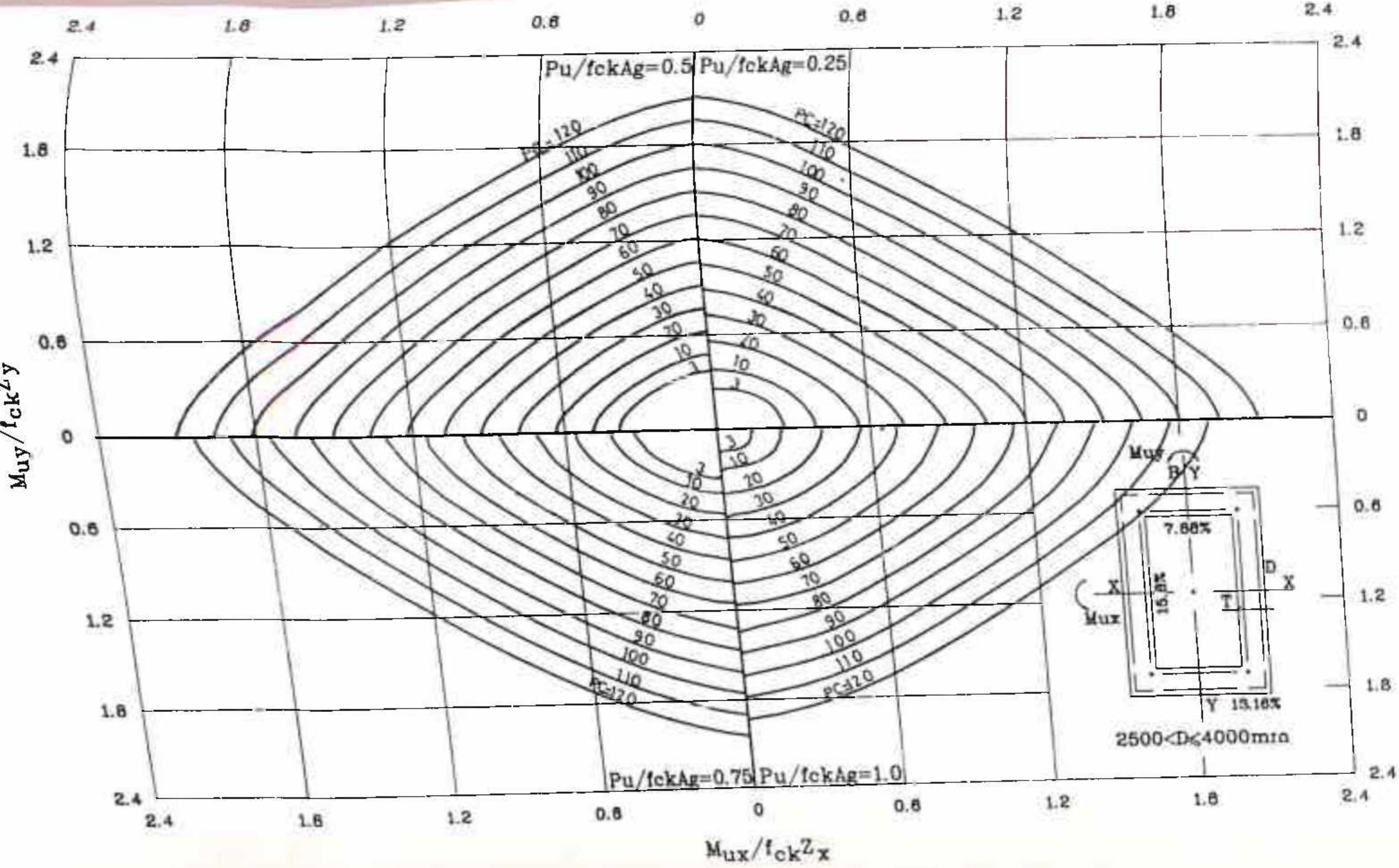

CHART A1·33 DESIGN CHART FOR RECTANGULAR HOLLOW COLUMNS

$D/B=4.0$; $d'/D=0.02$; $D/T=7.5$

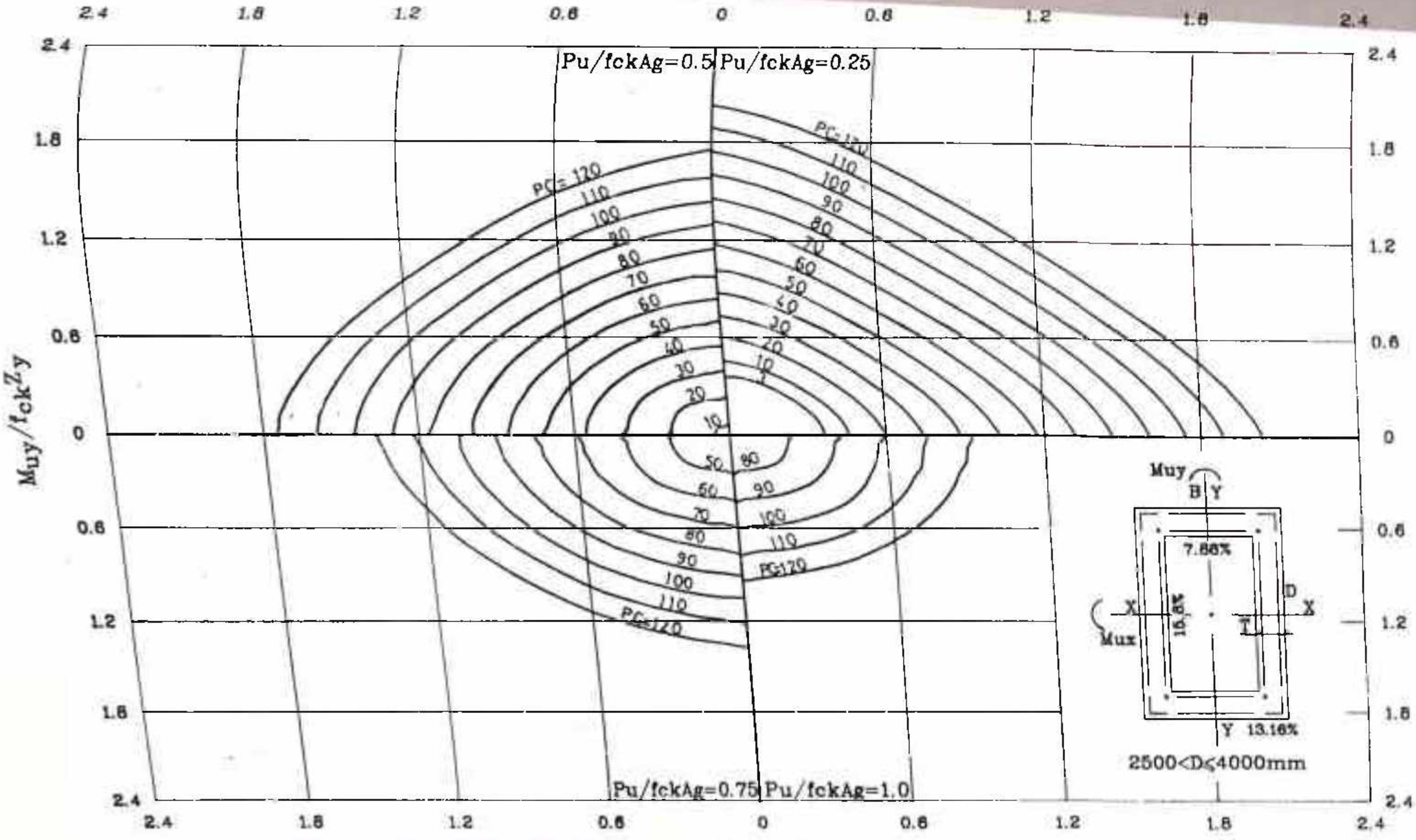

CHART A1-34 DESIGN CHART FOR RECTANGULAR HOLLOW COLUMNS

D/B=4.0 ; d'/D=0.02 ; D/T=10.0

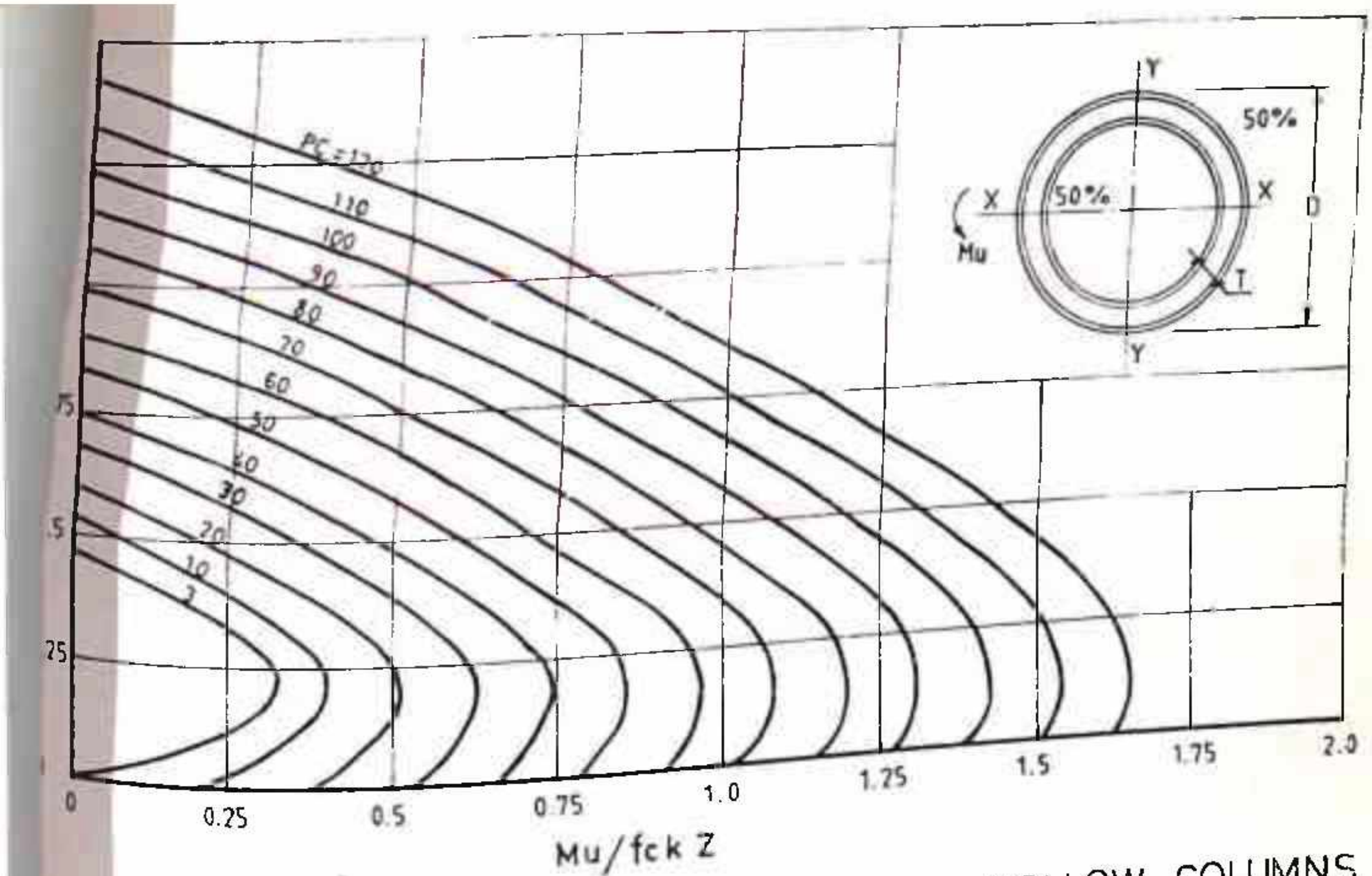

CHART A1·35 DESIGN CHART FOR CIRCULAR HOLLOW COLUMNS
$d'/D = 0.012$; $D/T = 10$

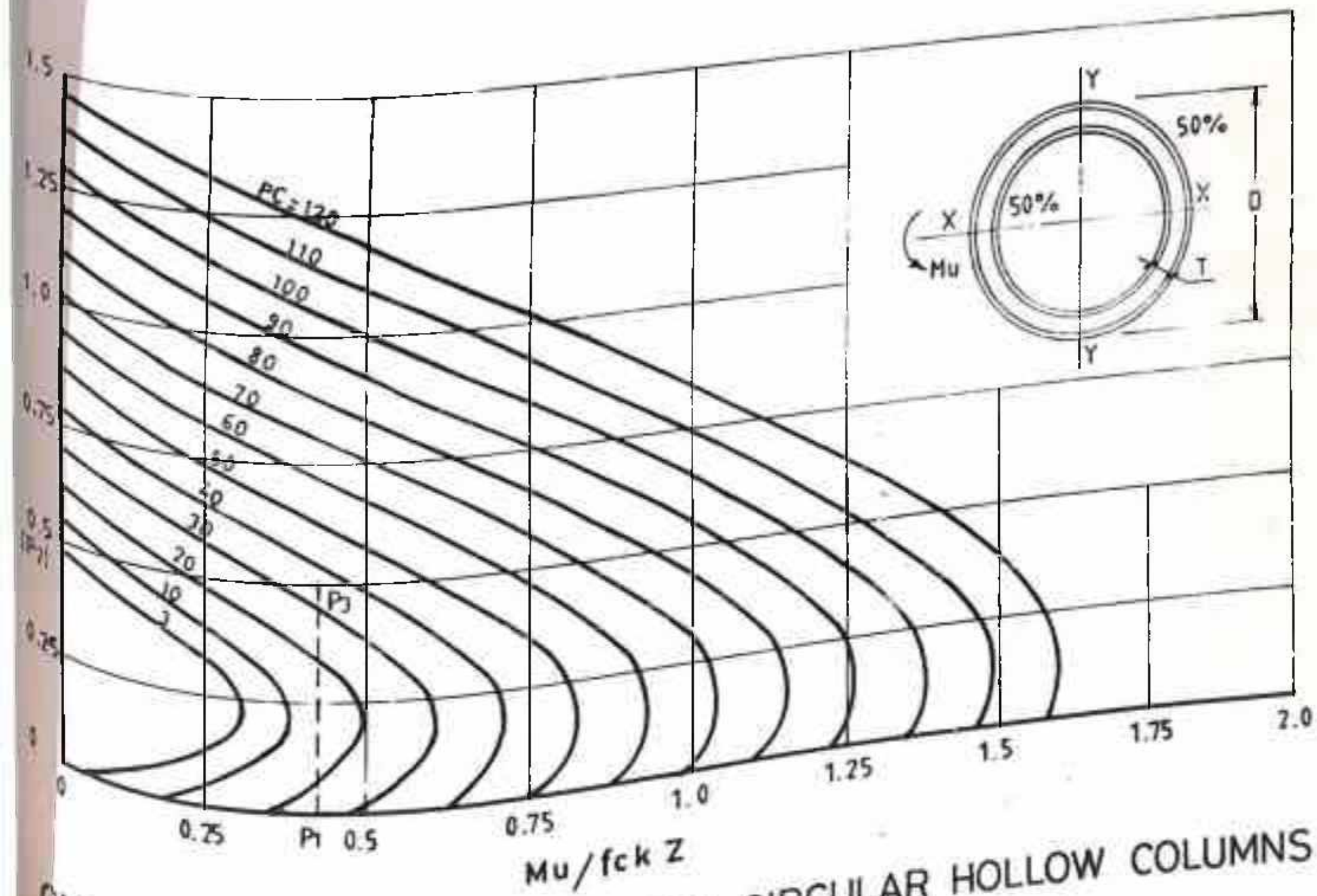

CHART A1·36 DESIGN CHART FOR CIRCULAR HOLLOW COLUMNS
$d'/D = 0.012$; $D/T = 15$

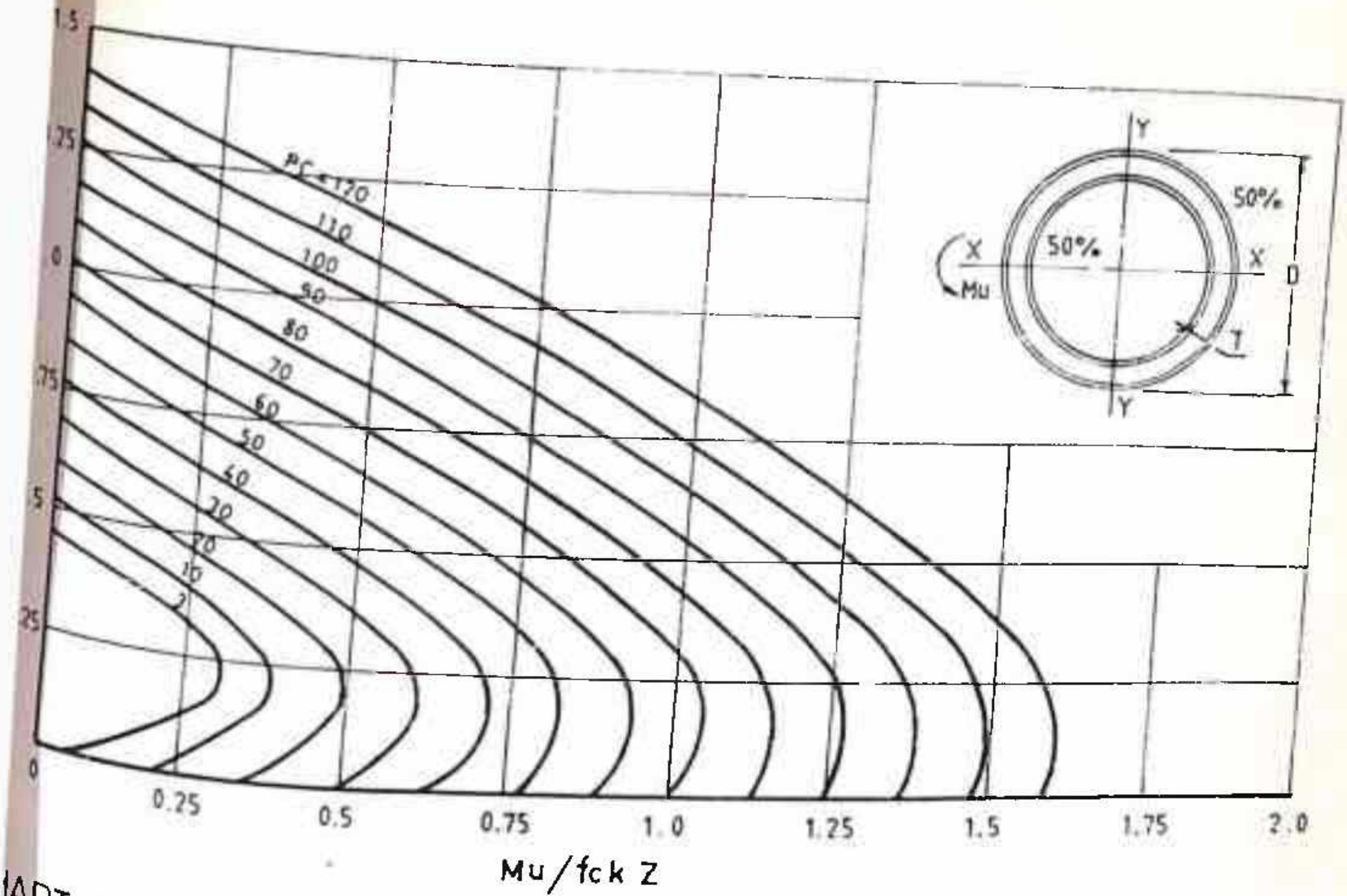

ART A1·37 DESIGN CHART FOR CIRCULAR HOLLOW COLUMNS
d'/D = 0.012 ; D/T = 20

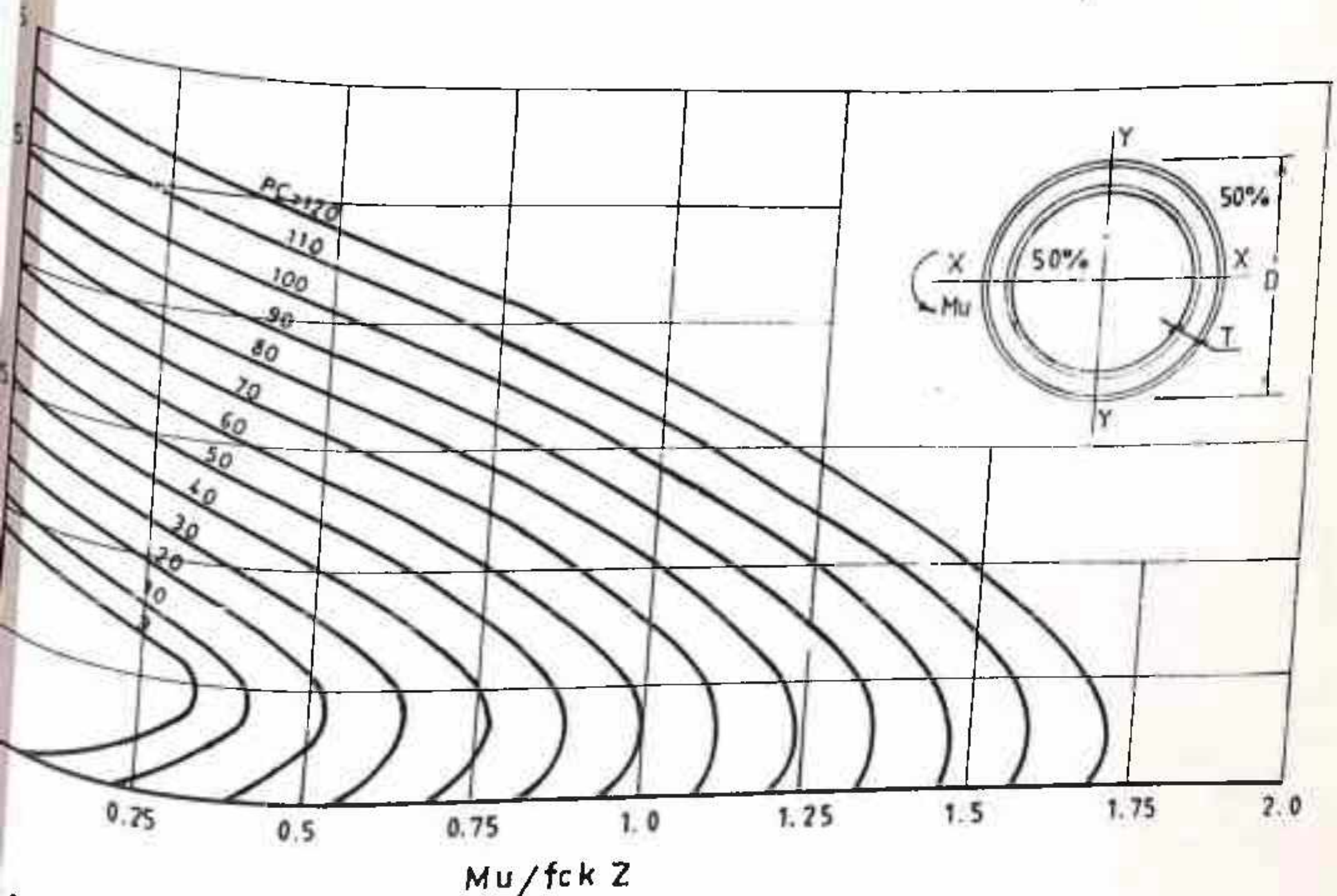

ART A1·38 DESIGN CHART FOR CIRCULAR HOLLOW COLUMNS
d'/D = 0.03 ; D/T = 5

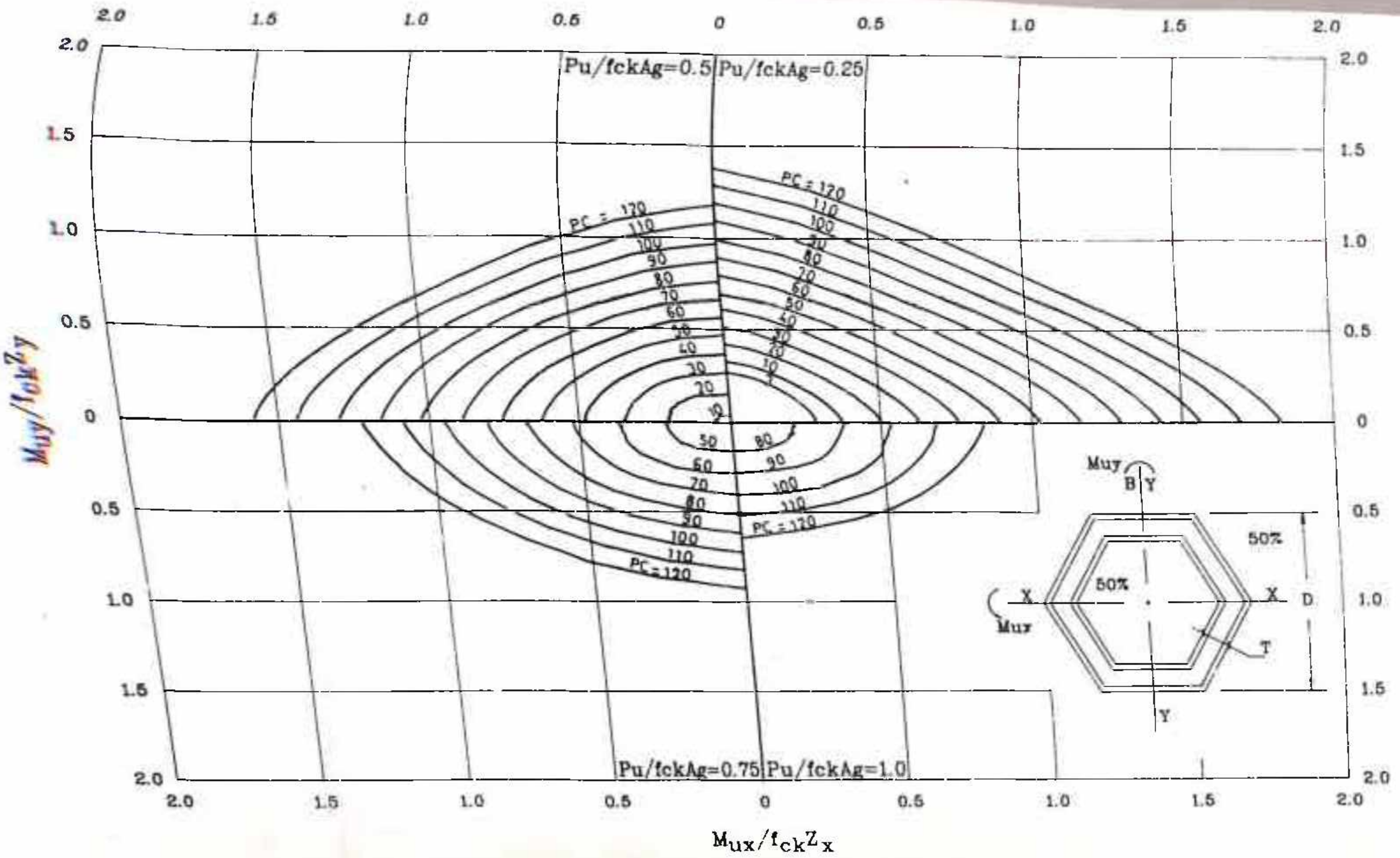

CHART A1·39 DESIGN CHART FOR HEXAGONAL HOLLOW COLUMNS

d'/D=0.012 ; D/T=7.5

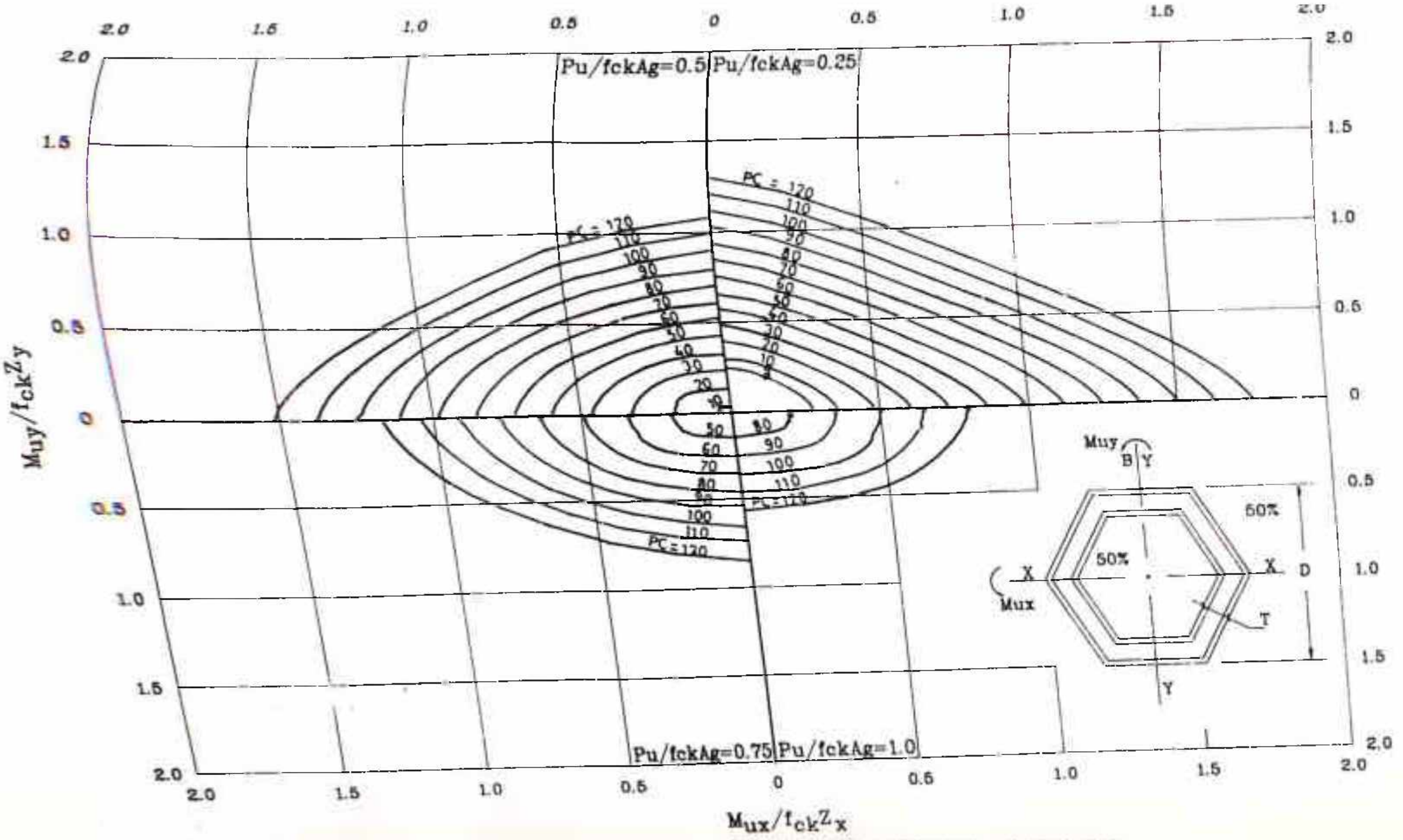

CHART A1·40 DESIGN CHART FOR HEXAGONAL HOLLOW COLUMNS

d'/D=0.012 ; D/T=10

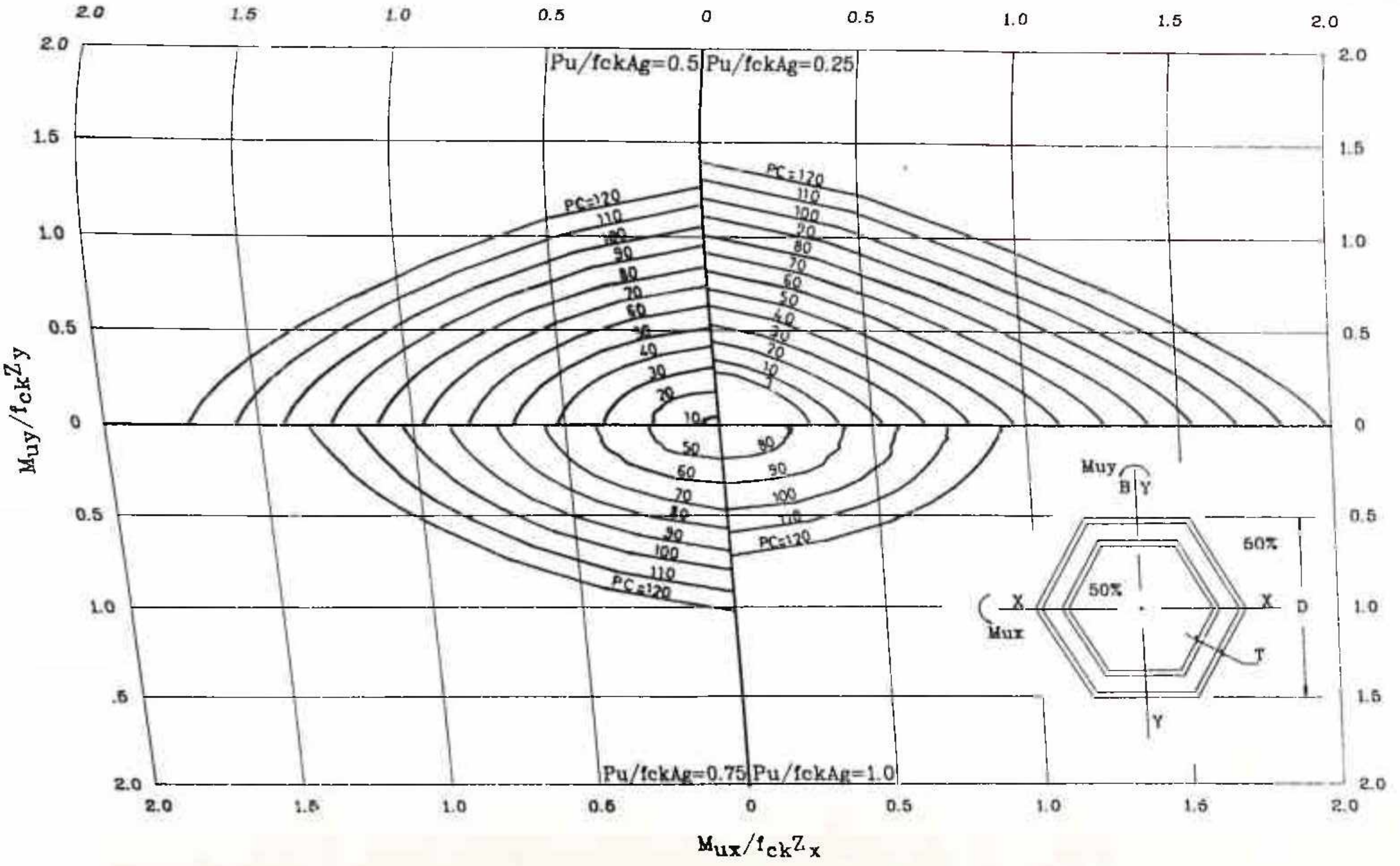

CHART A1·41 DESIGN CHART FOR HEXAGONAL HOLLOW COLUMNS

d'/D=0.012 ; D/T=15

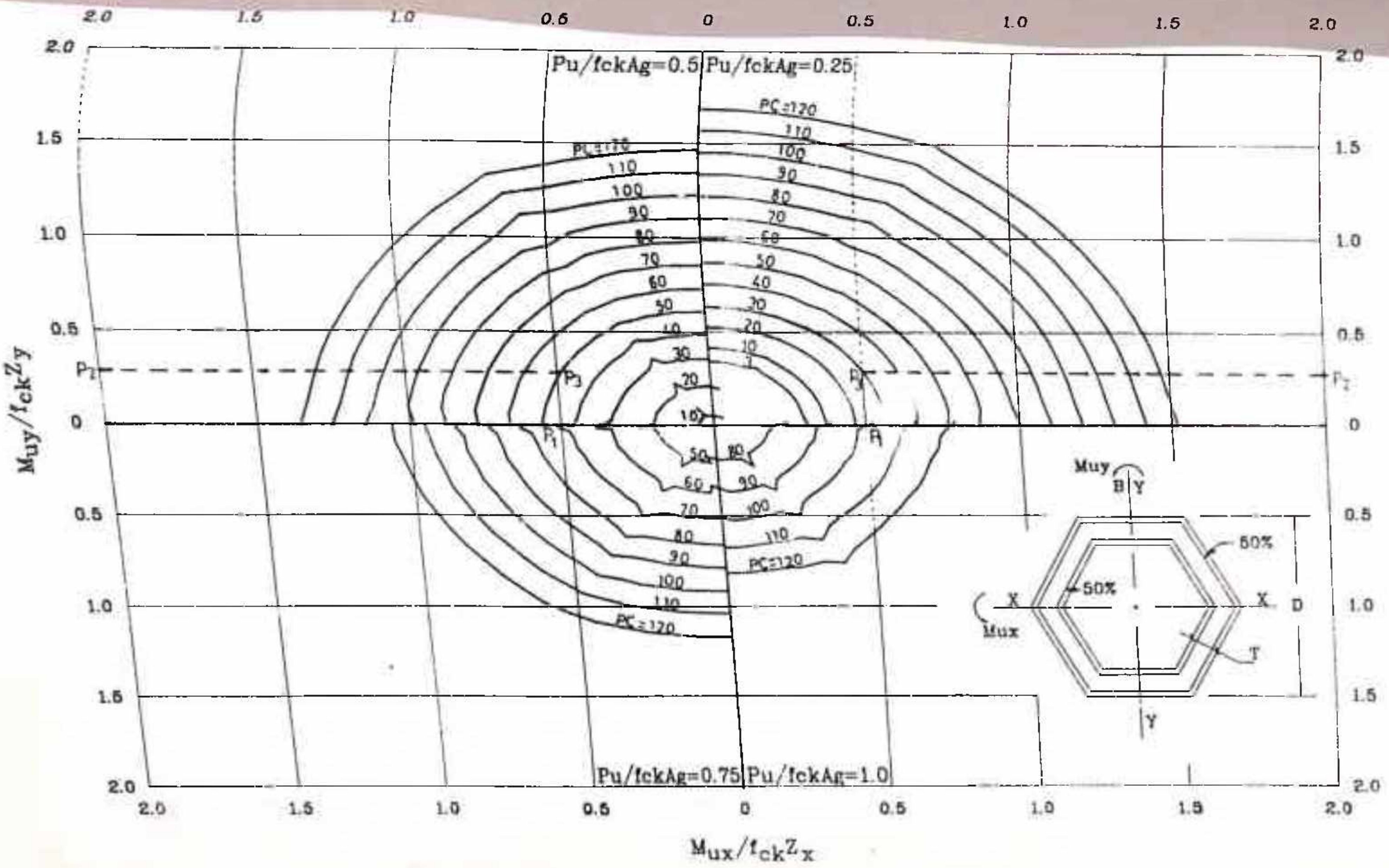

CHART A1·42 DESIGN CHART FOR HEXAGONAL HOLLOW COLUMNS

$d'/D = 0.012$; $D/T = 20$

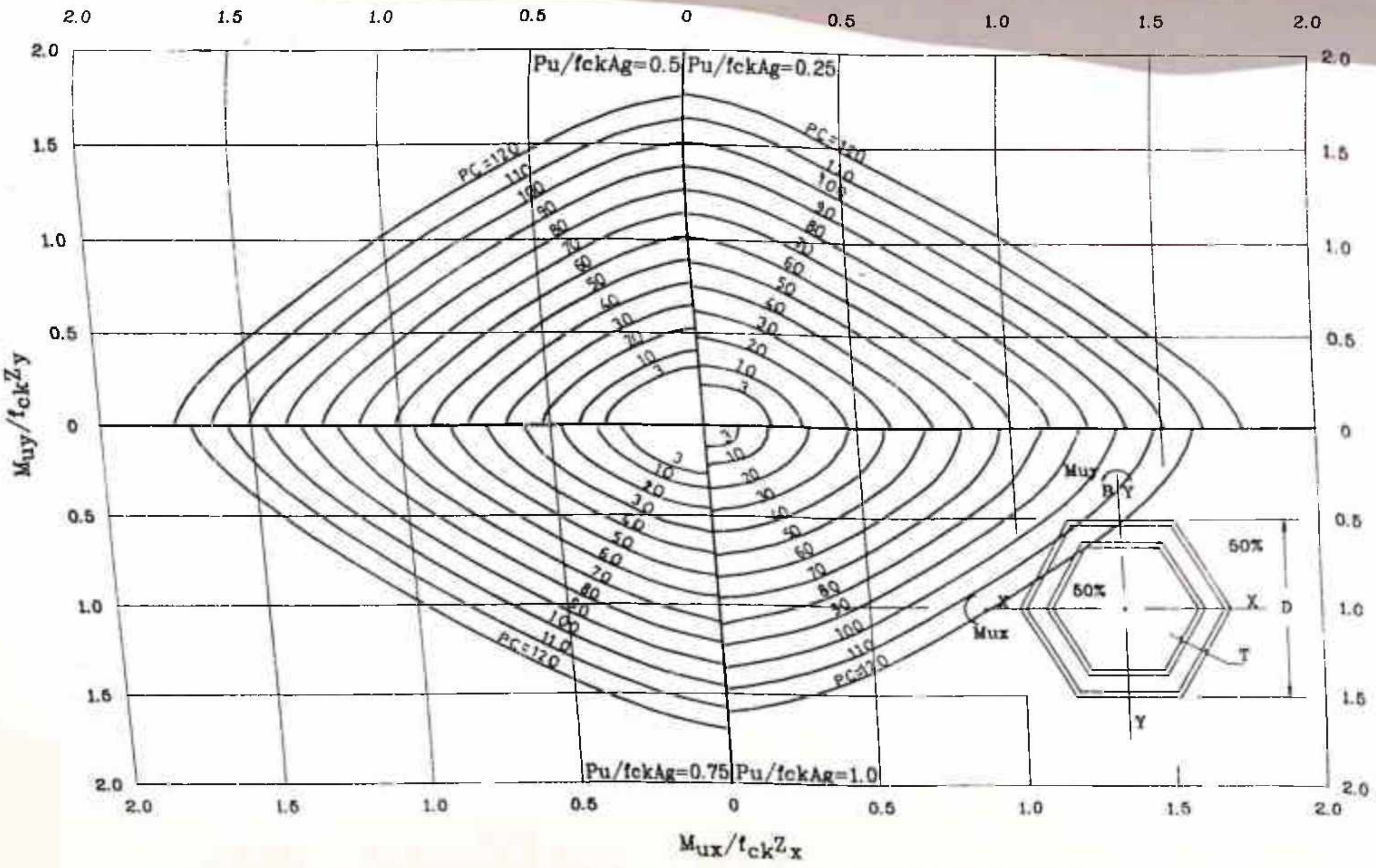

CHART A1·43 DESIGN CHART FOR HEXAGONAL HOLLOW COLUMNS

$d'/D=0.02$; $D/T=5$

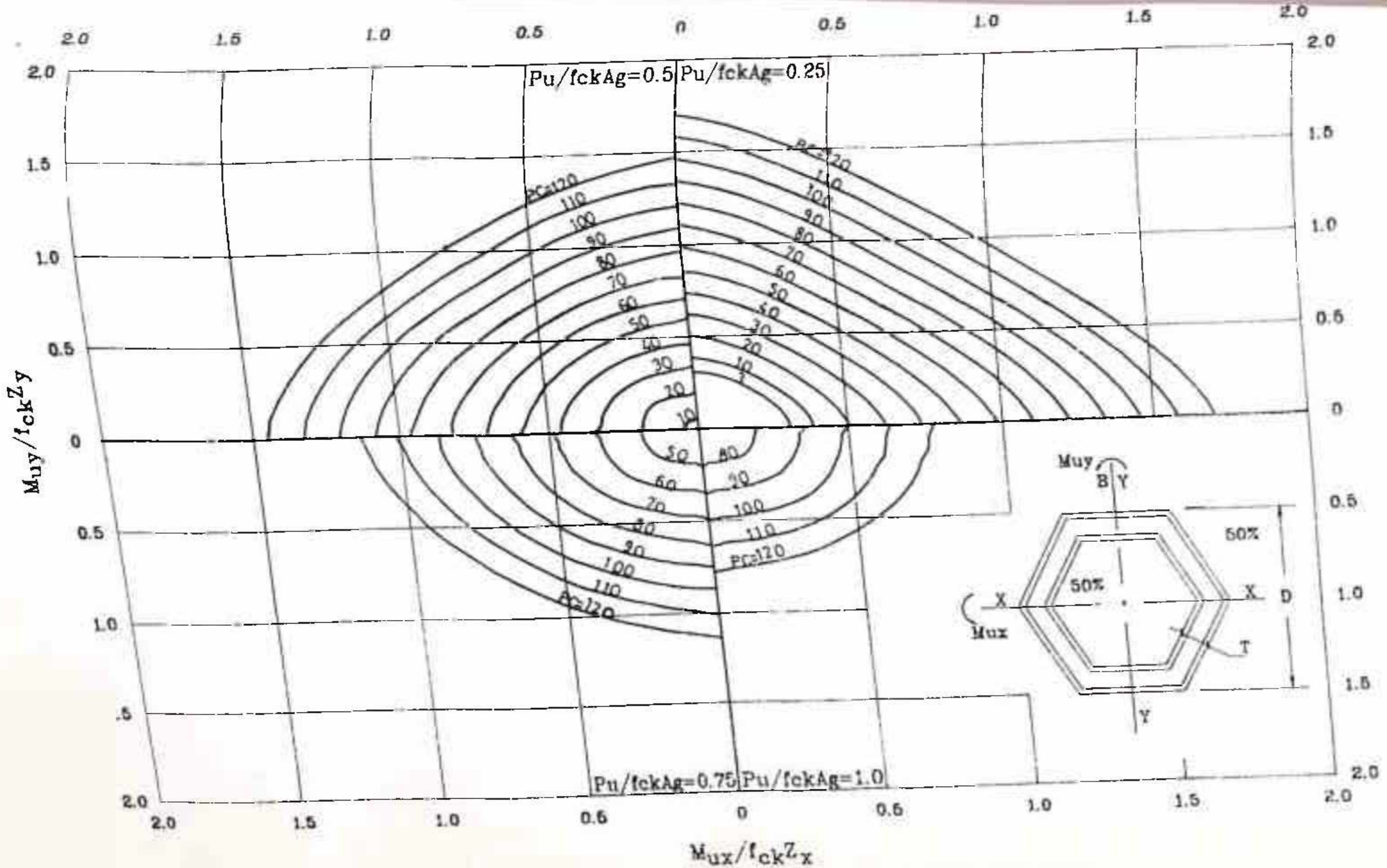

CHART A1·44 DESIGN CHART FOR HEXAGONAL HOLLOW COLUMNS

d'/D=0.02 ; D/T=7.5

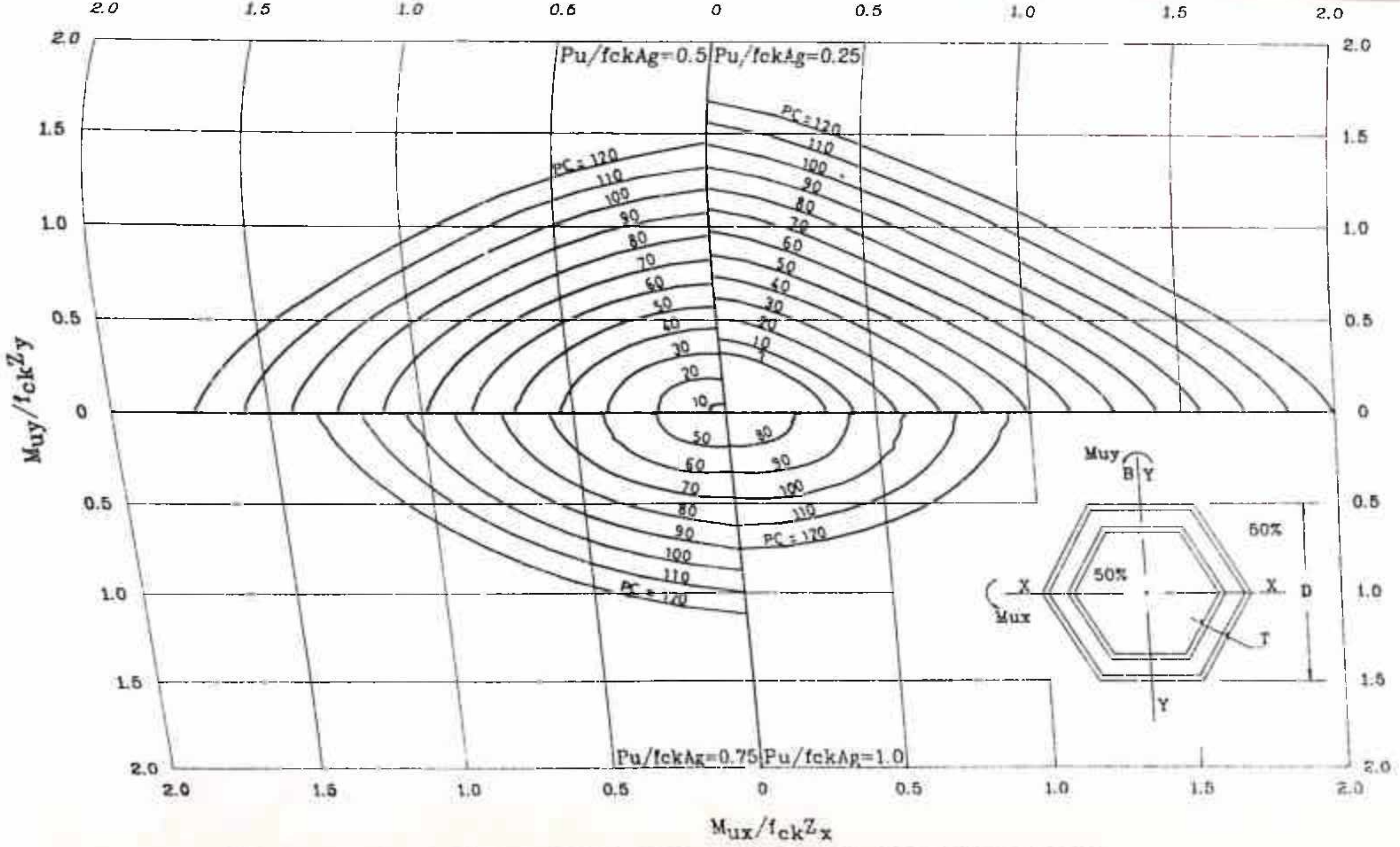

CHART A1·45 DESIGN CHART FOR HEXAGONAL HOLLOW COLUMNS

d'/D=0.02 ; D/T=10

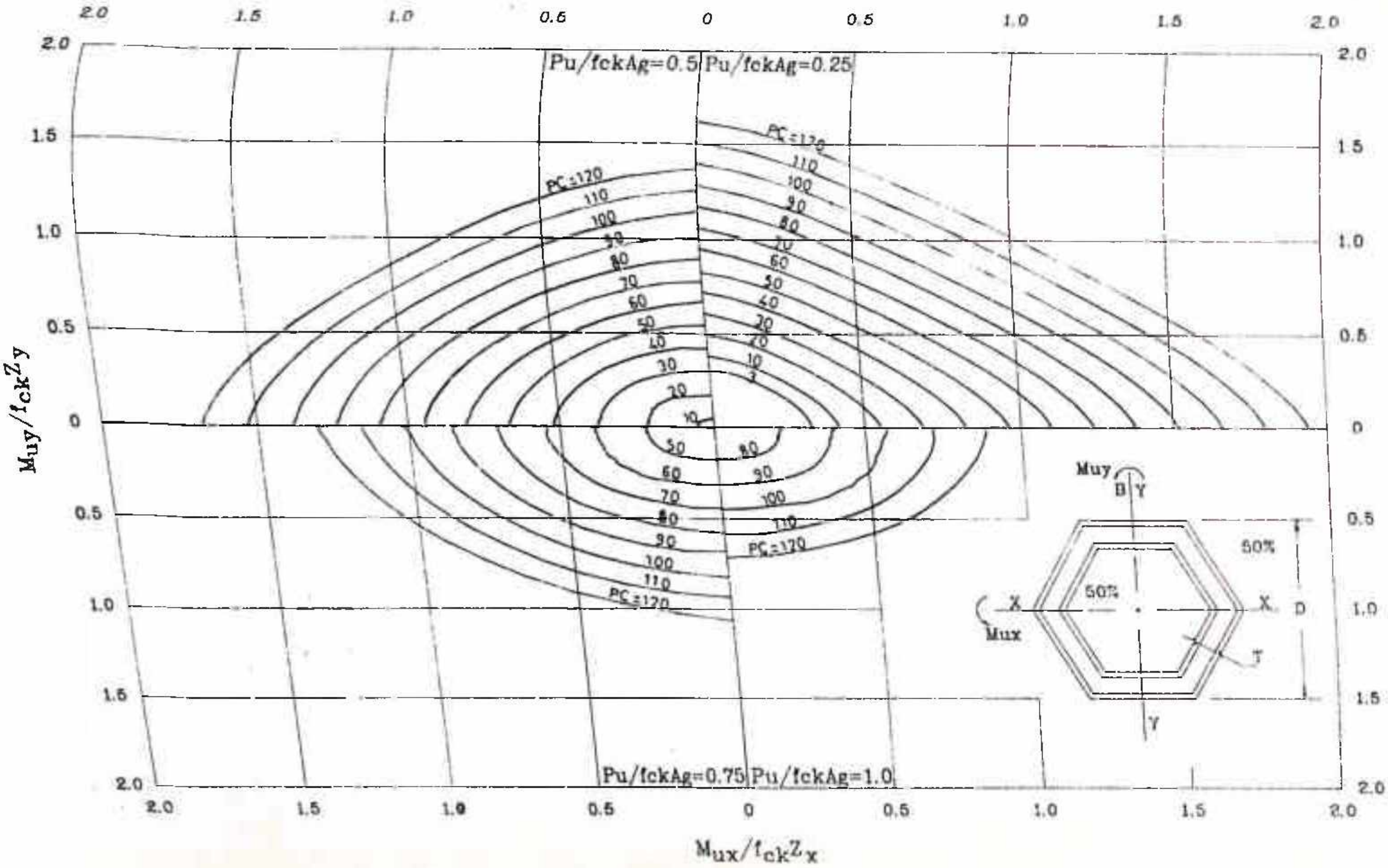

CHART A1·46 DESIGN CHART FOR HEXAGONAL HOLLOW COLUMNS

d'/D=0.02 : D/T=15

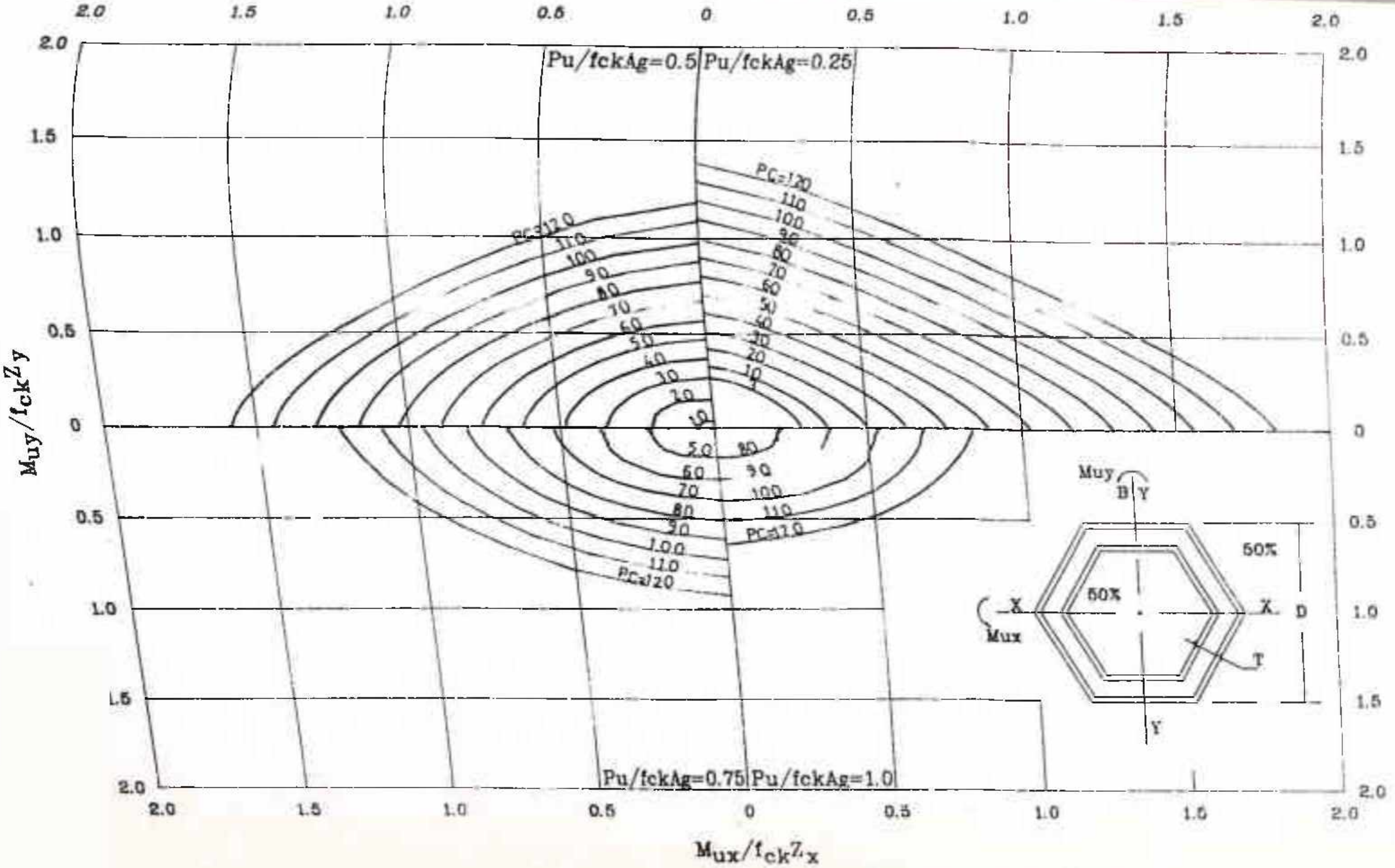

CHART A1·47 DESIGN CHART FOR HEXAGONAL HOLLOW COLUMNS

d'/D=0.02 ; D/T=20

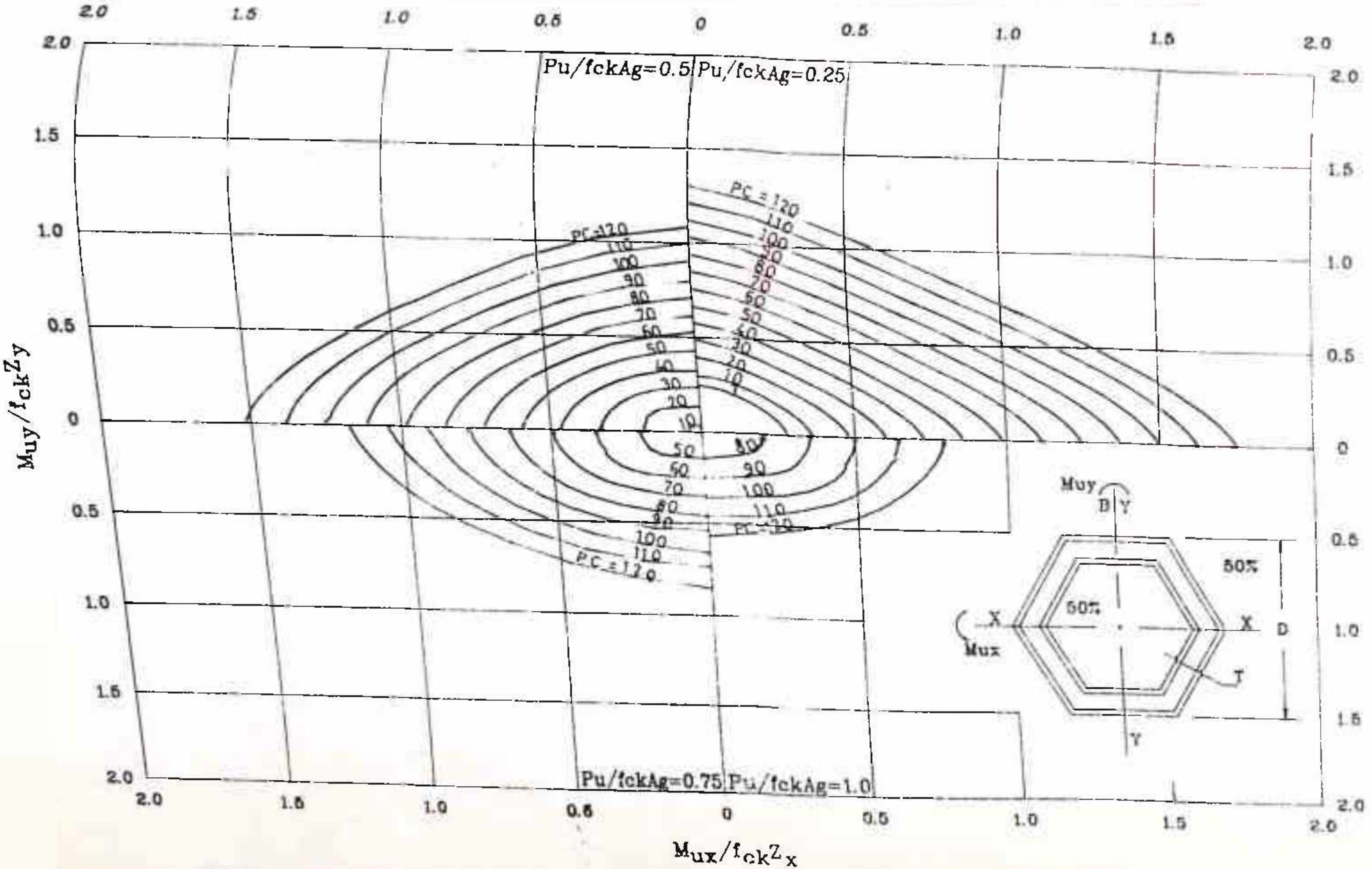

CHART A1-48 DESIGN CHART FOR HEXAGONAL HOLLOW COLUMNS

d'/D=0.03 : D/T=5

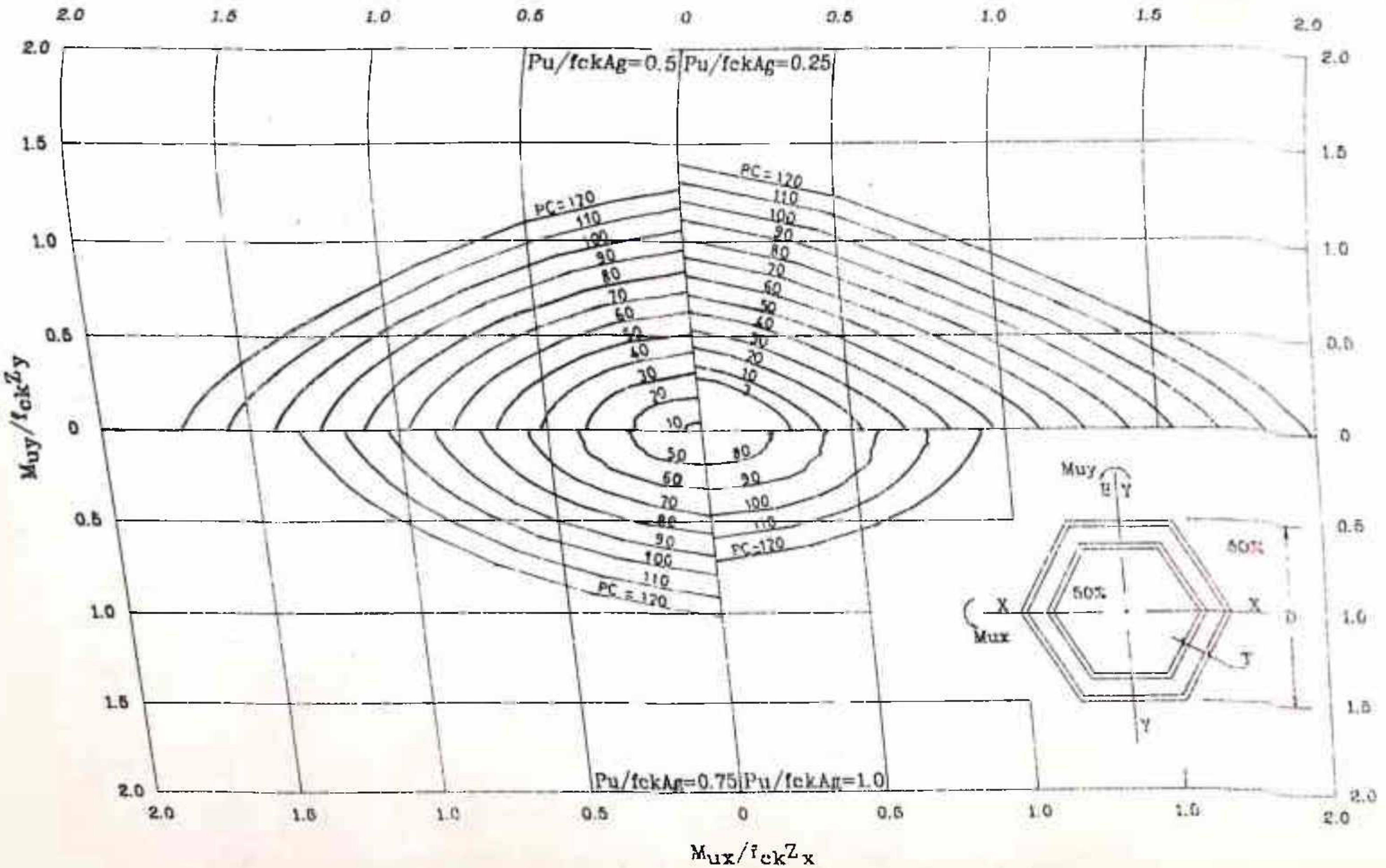

CHART A1·49 DESIGN CHART FOR HEXAGONAL HOLLOW COLUMNS

$d'/D=0.03$; $D/T=7.5$

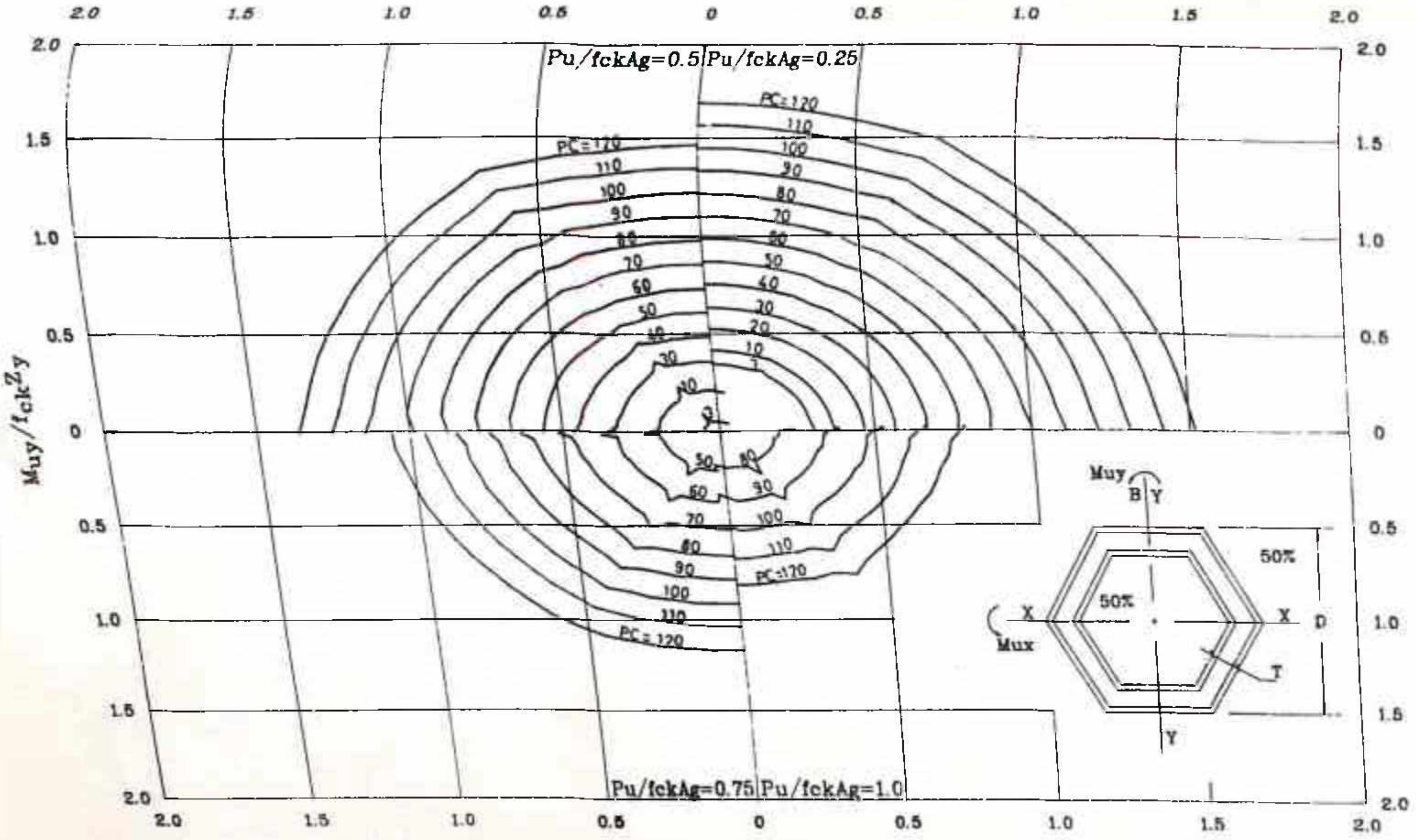

CHART A1·50 DESIGN CHART FOR HEXAGONAL HOLLOW COLUMNS

d'/D=0.03 ; D/T=10

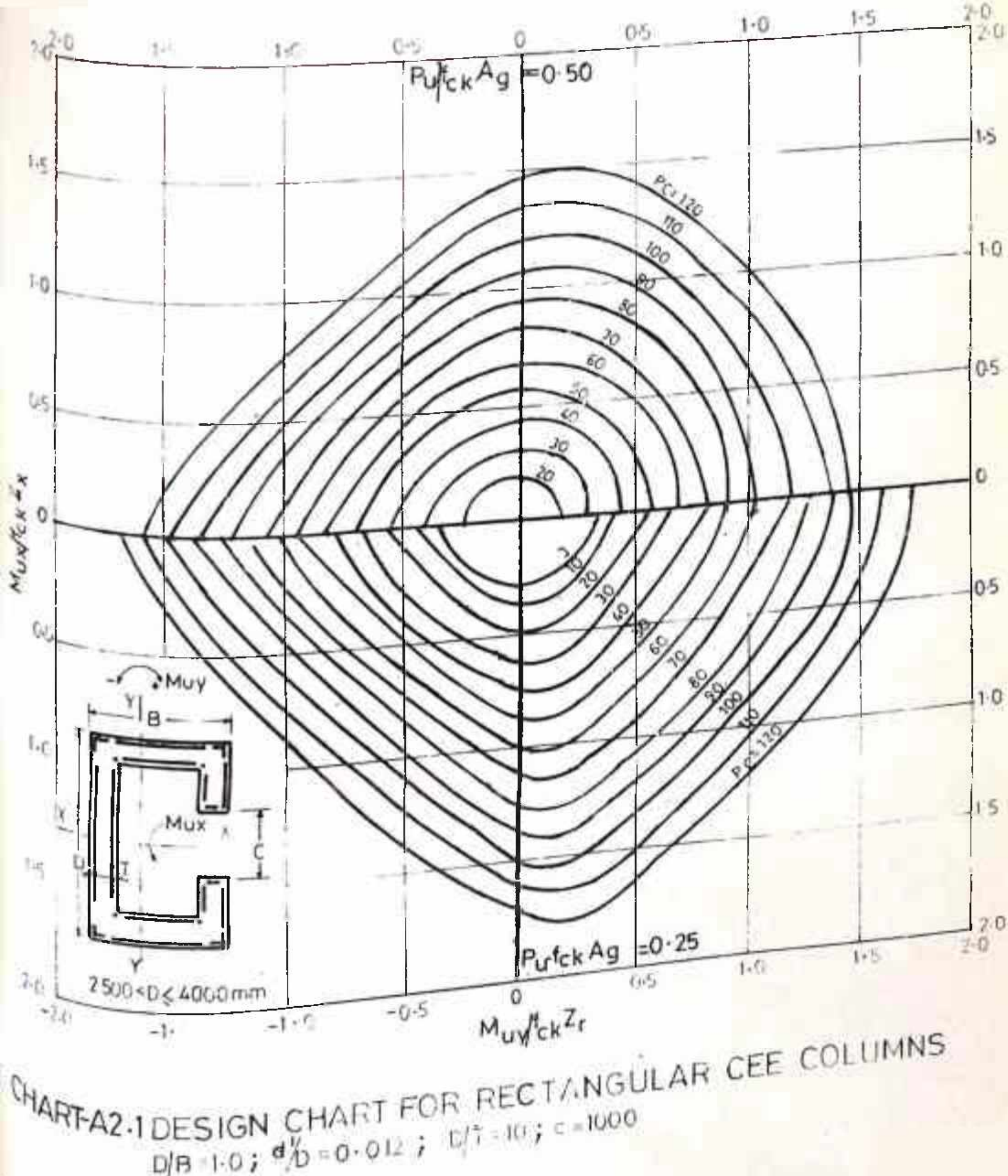

CHART-A2.1 DESIGN CHART FOR RECTANGULAR CEE COLUMNS
D/B = 1.0 ; d'/D = 0.012 ; D/T = 10 ; c = 1000

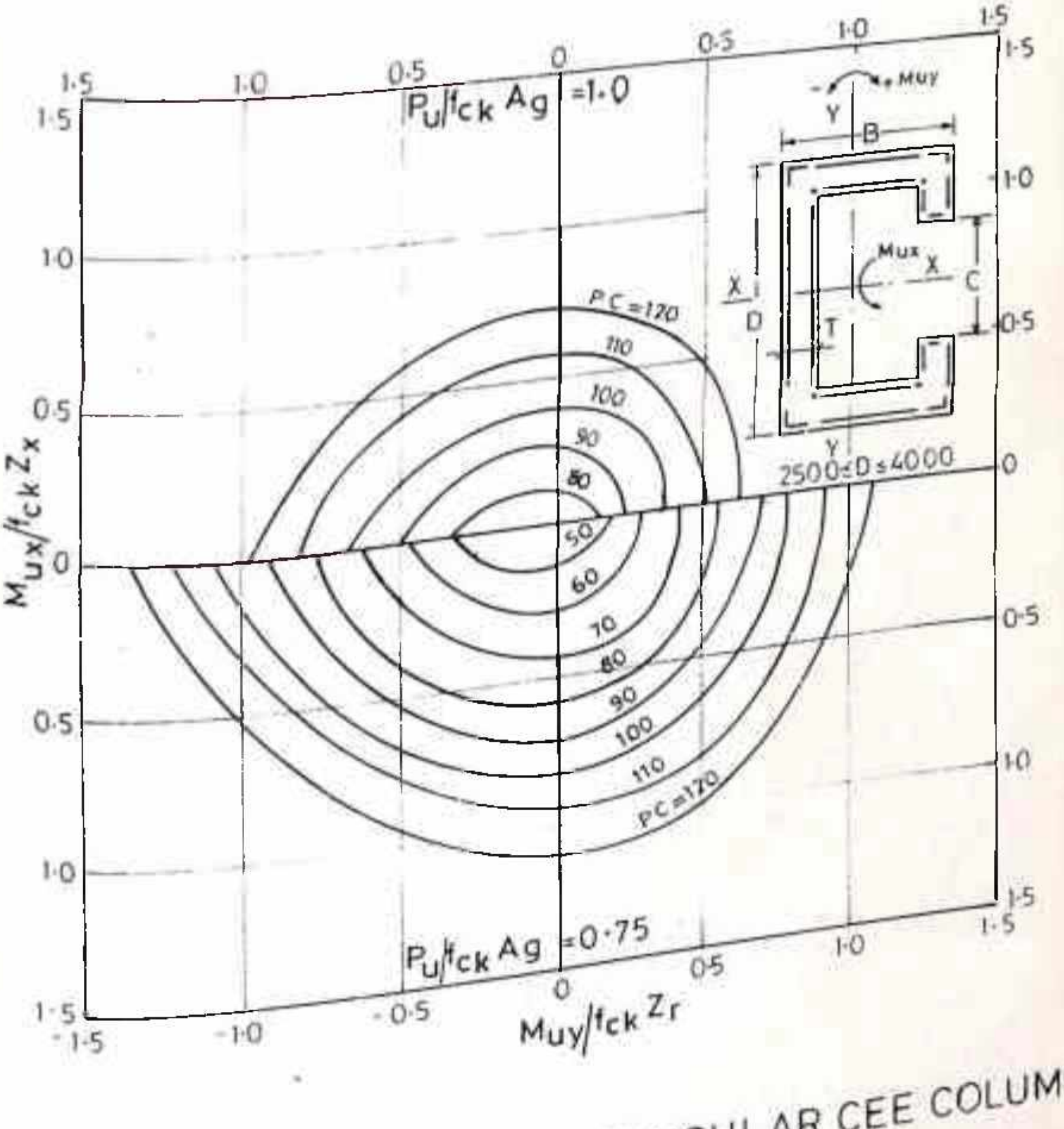

CHART-A2.2 DESIGN CHART FOR RECTANGULAR CEE COLUMN

D/B = 1·0 ; d′/D = 0·012 ; D/T = 10 ; C = 1000

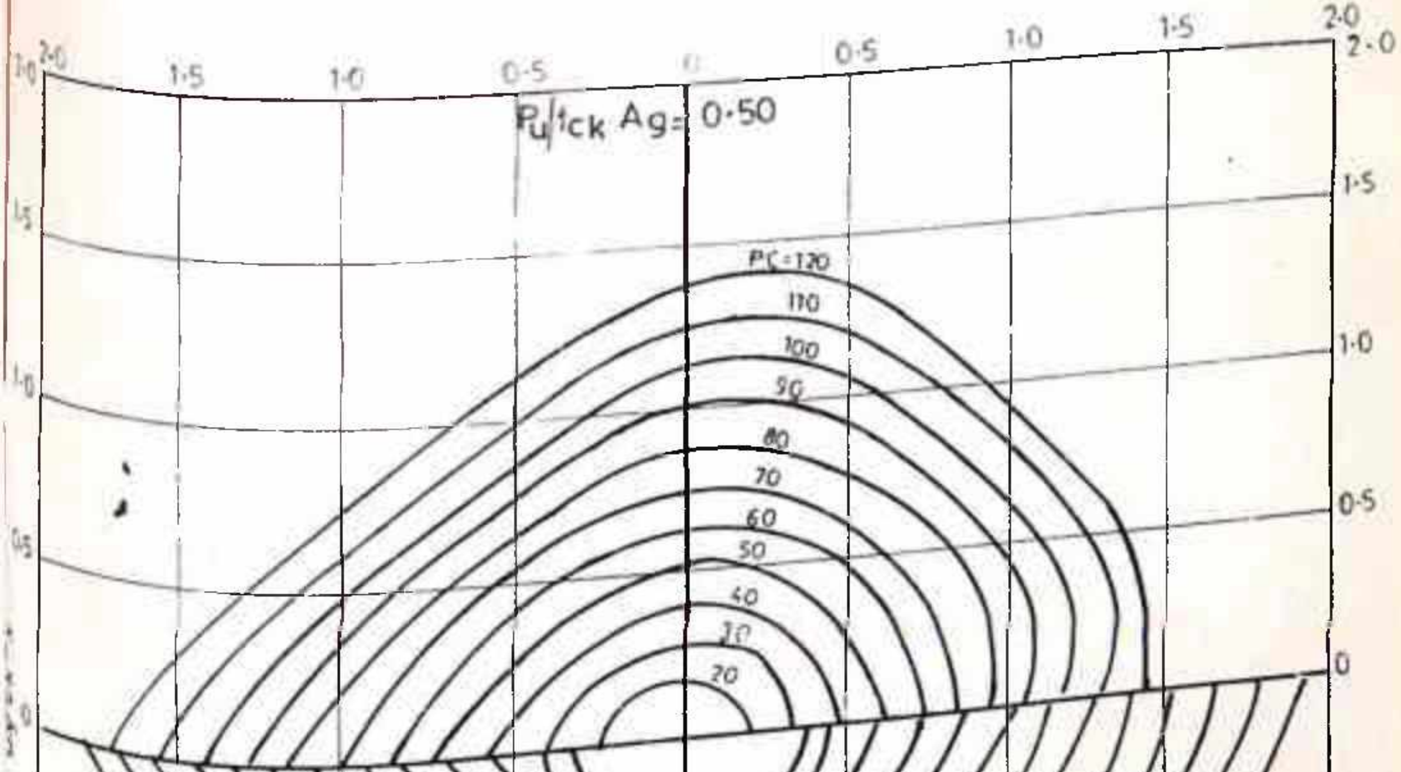

HART-A2·3DESIGN CHART FOR RECTANGULAR CEE COLUMNS

D/B = 1·5; d'/D = 0·012; D/T = 15; C = 1000

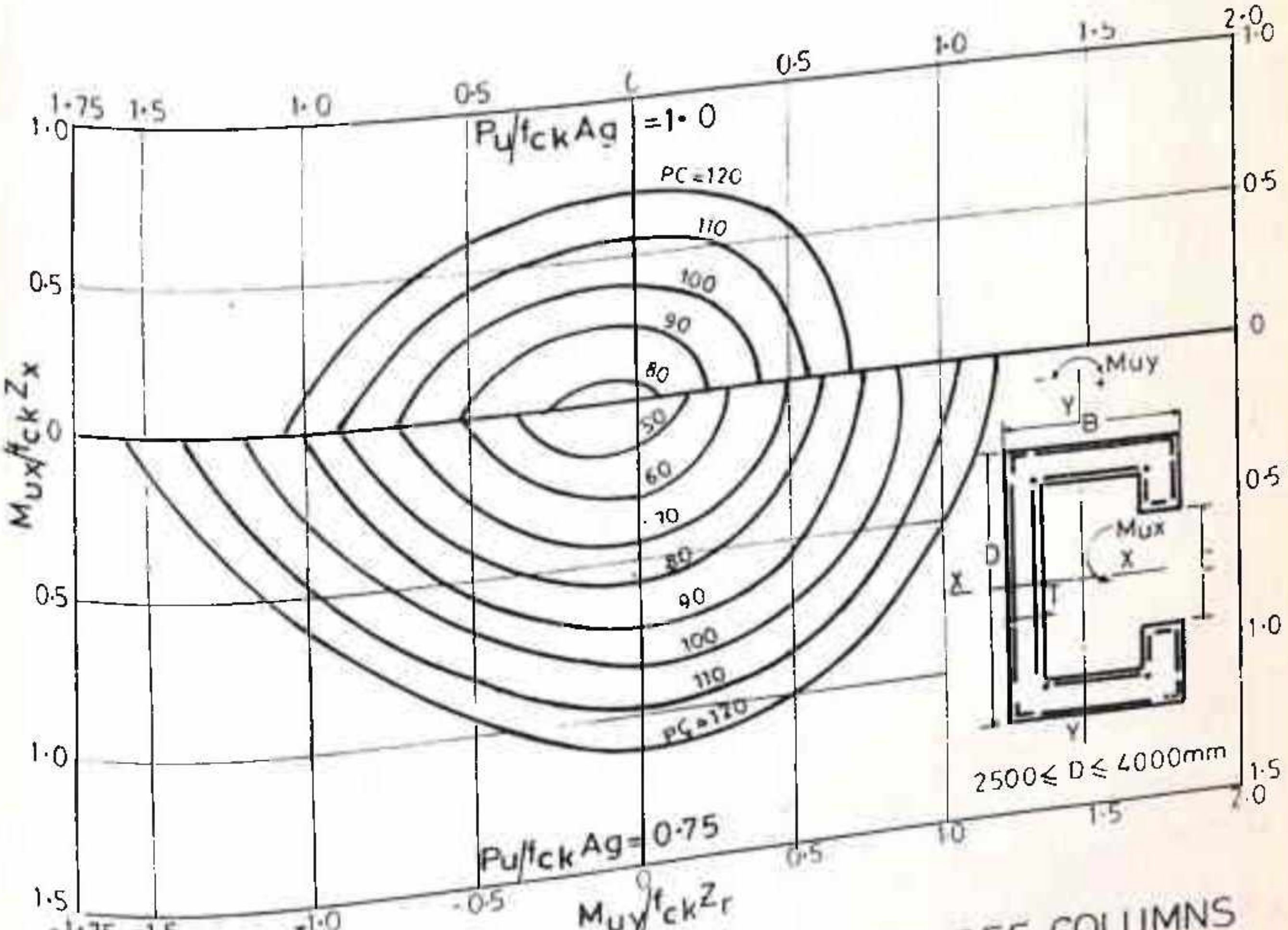

CHART-A 2·4 DESIGN CHART FOR RECTANGULAR CEE COLUMNS

$D/B = 1{\cdot}5$; $d'/D = 0{\cdot}012$; $D/T = 15$; $C = 1000$

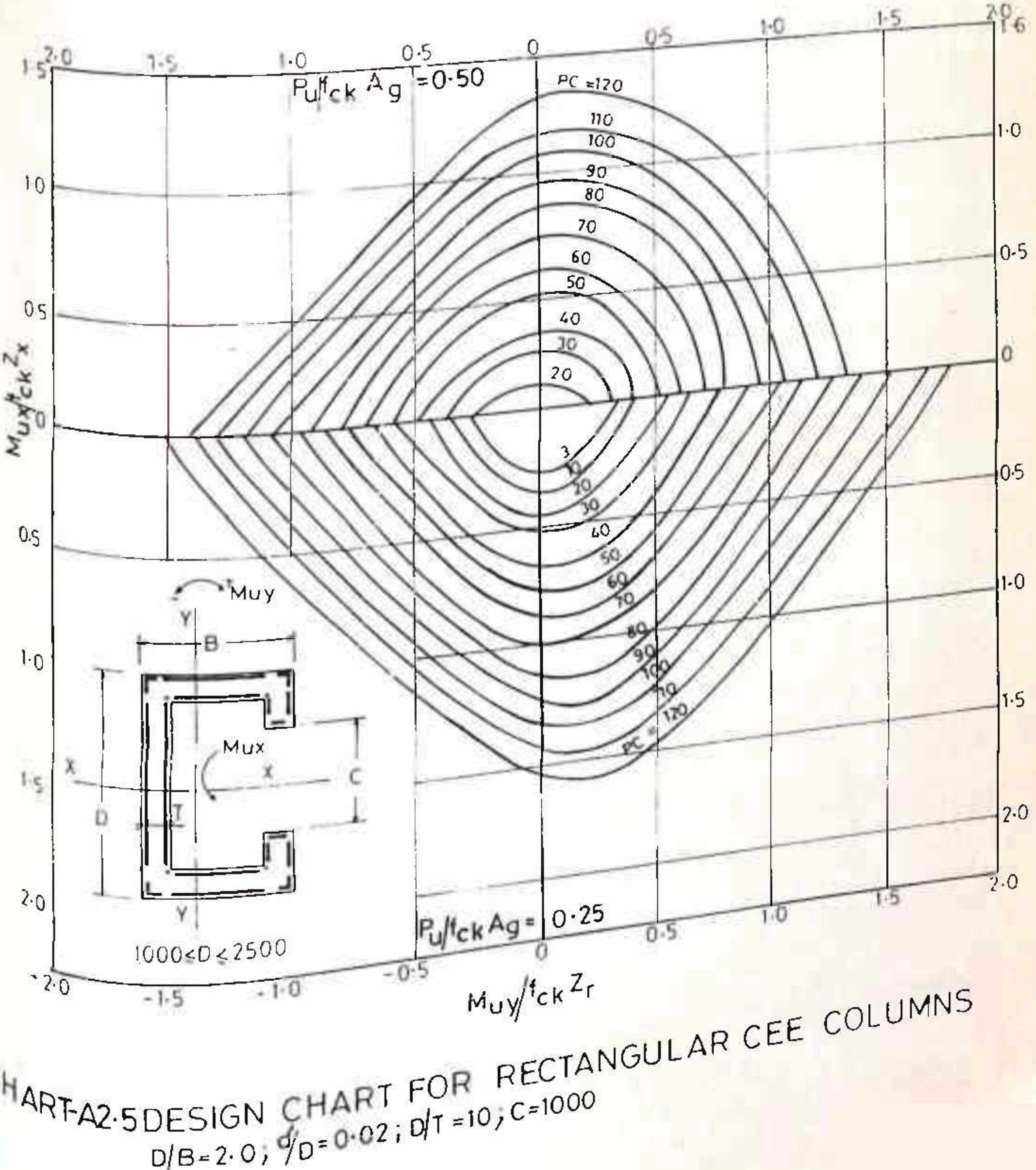

CHART-A2·5 DESIGN CHART FOR RECTANGULAR CEE COLUMNS

D/B = 2·0; d'/D = 0·02; D/T = 10; C=1000

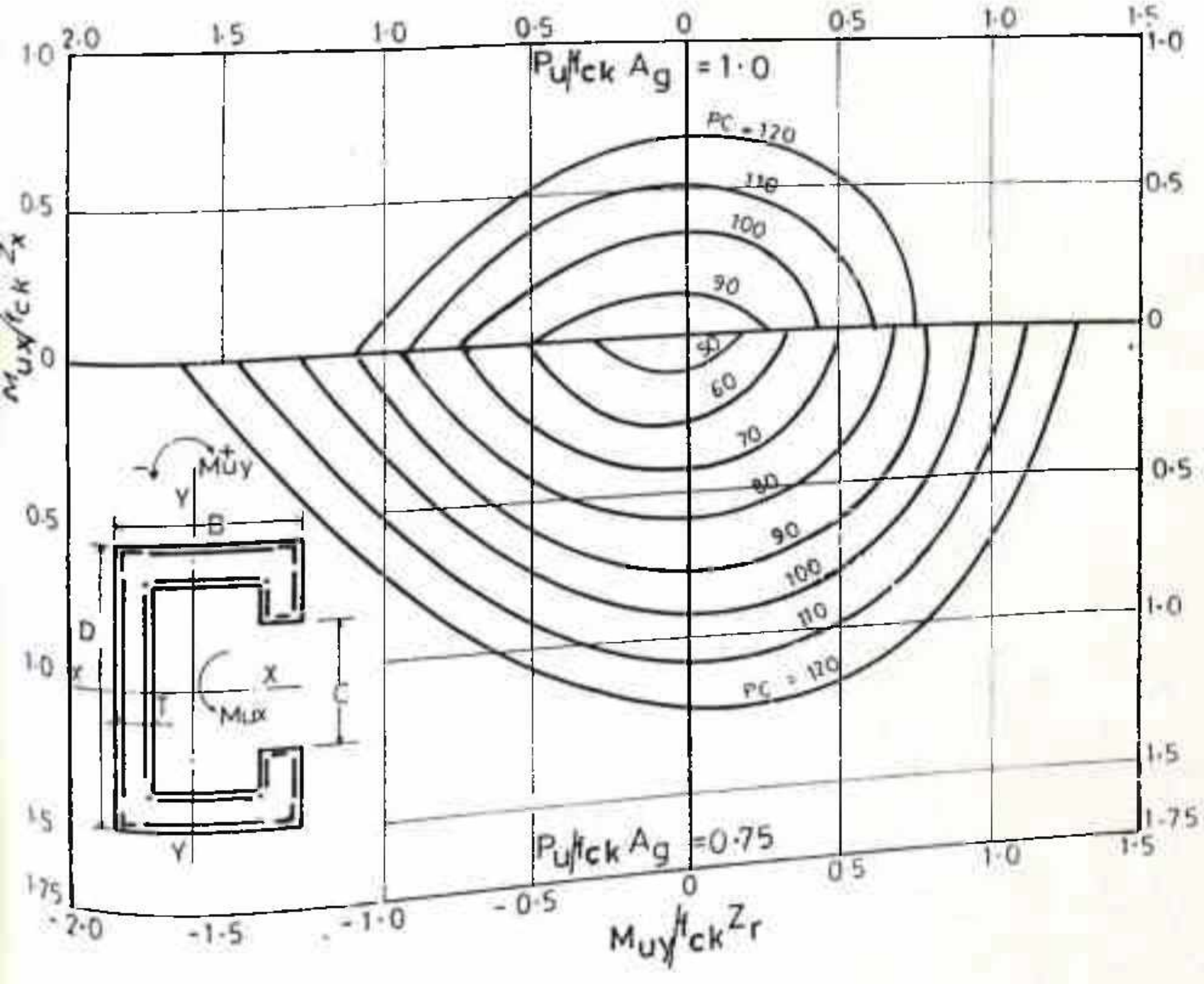

CHART-A2·6 DESIGN CHART FOR RECTANGULAR CEE COLUMNS

$D/B = 2\cdot0$; $d'/D = 0\cdot02$; $D/T = 10$; $C = 1000$

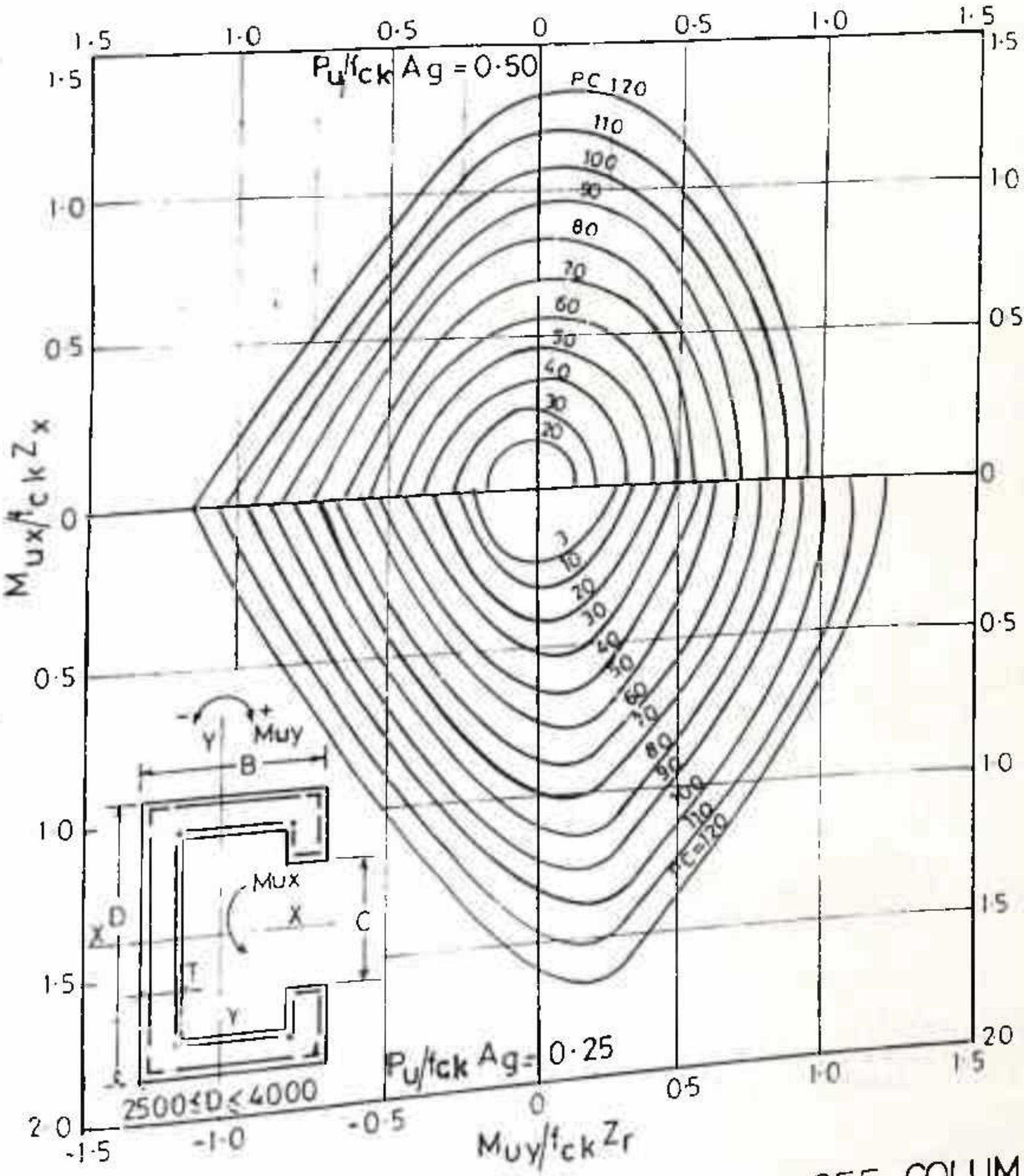

CHART-A2·7 DESIGN CHART FOR RECTANGULAR CEE COLUMNS
$D/B = 2{\cdot}0$; $d'/D = 0{\cdot}02$; $D/T = 7{\cdot}5$; $C = 1000$

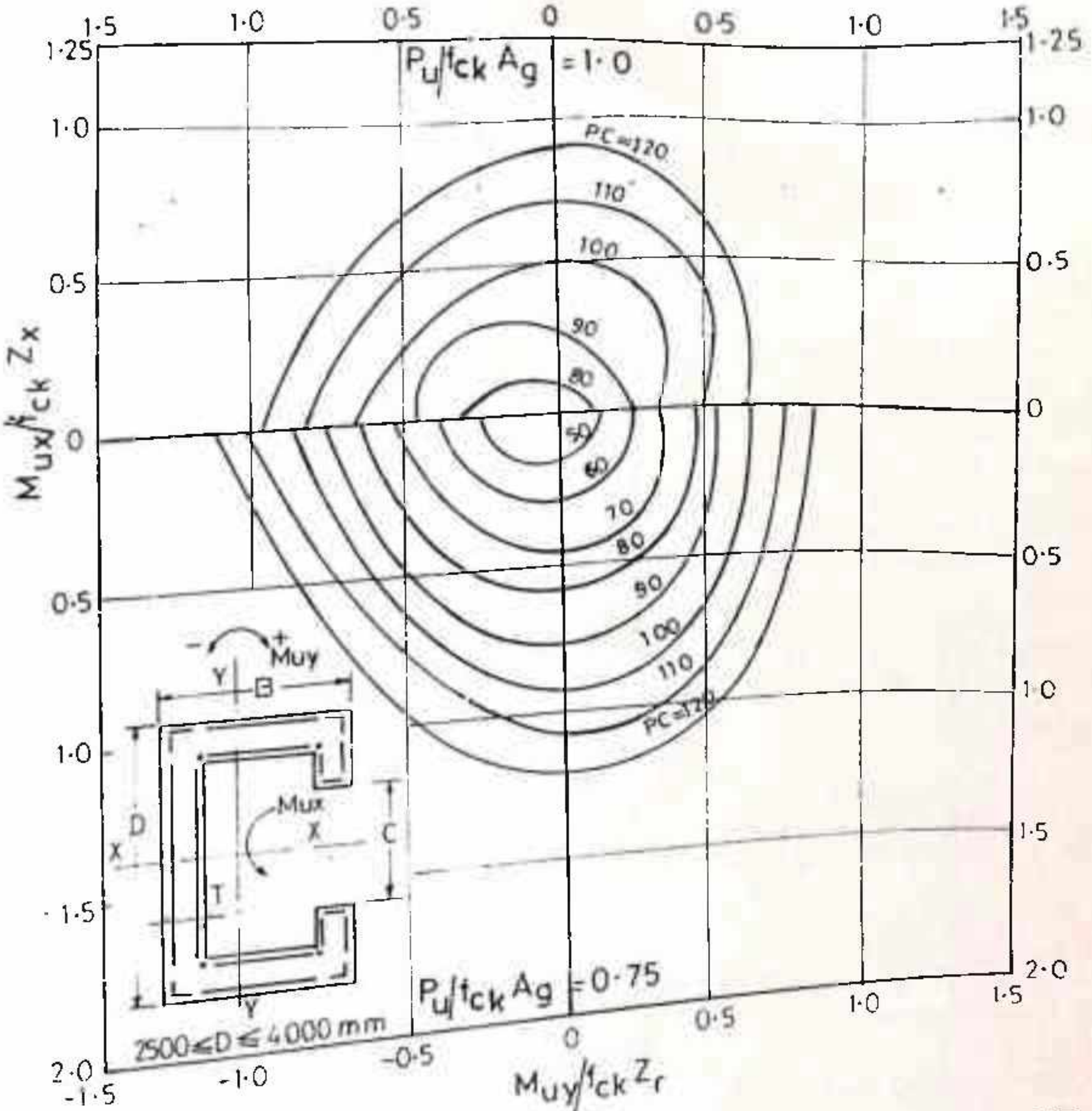

CHART-A2·8 DESIGN CHART FOR RECTANGULAR CEE COLUMNS

$D/B = 2\cdot0$; $d'/D = 0\cdot02$; $D/T = 7\cdot5$; $C = 1000$

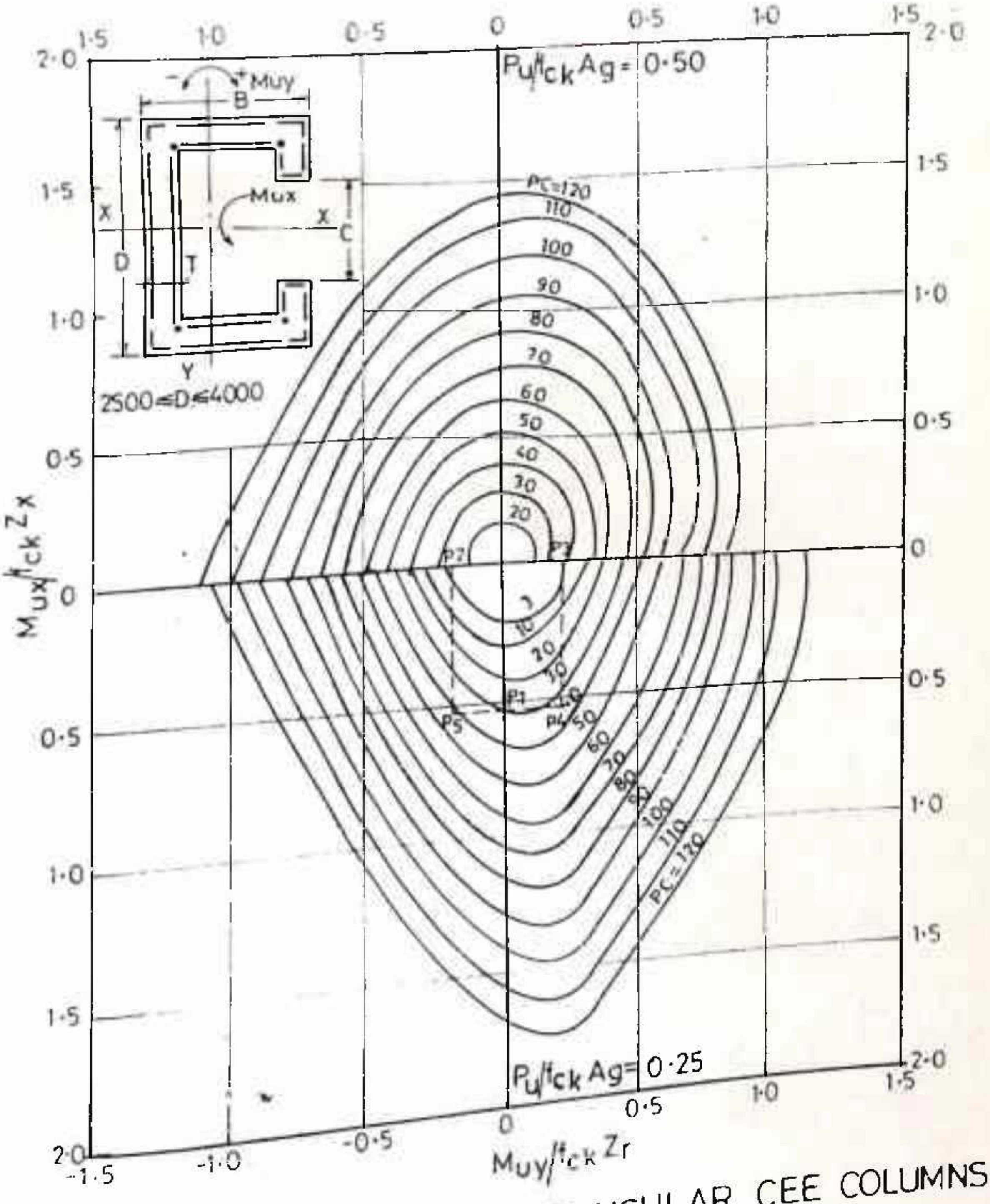

CHART A2.9 DESIGN CHART FOR RECTANGULAR CEE COLUMNS
D/B = 3·0 ; d'/D = 0·012 ; D/T = 15 ; C = 1000

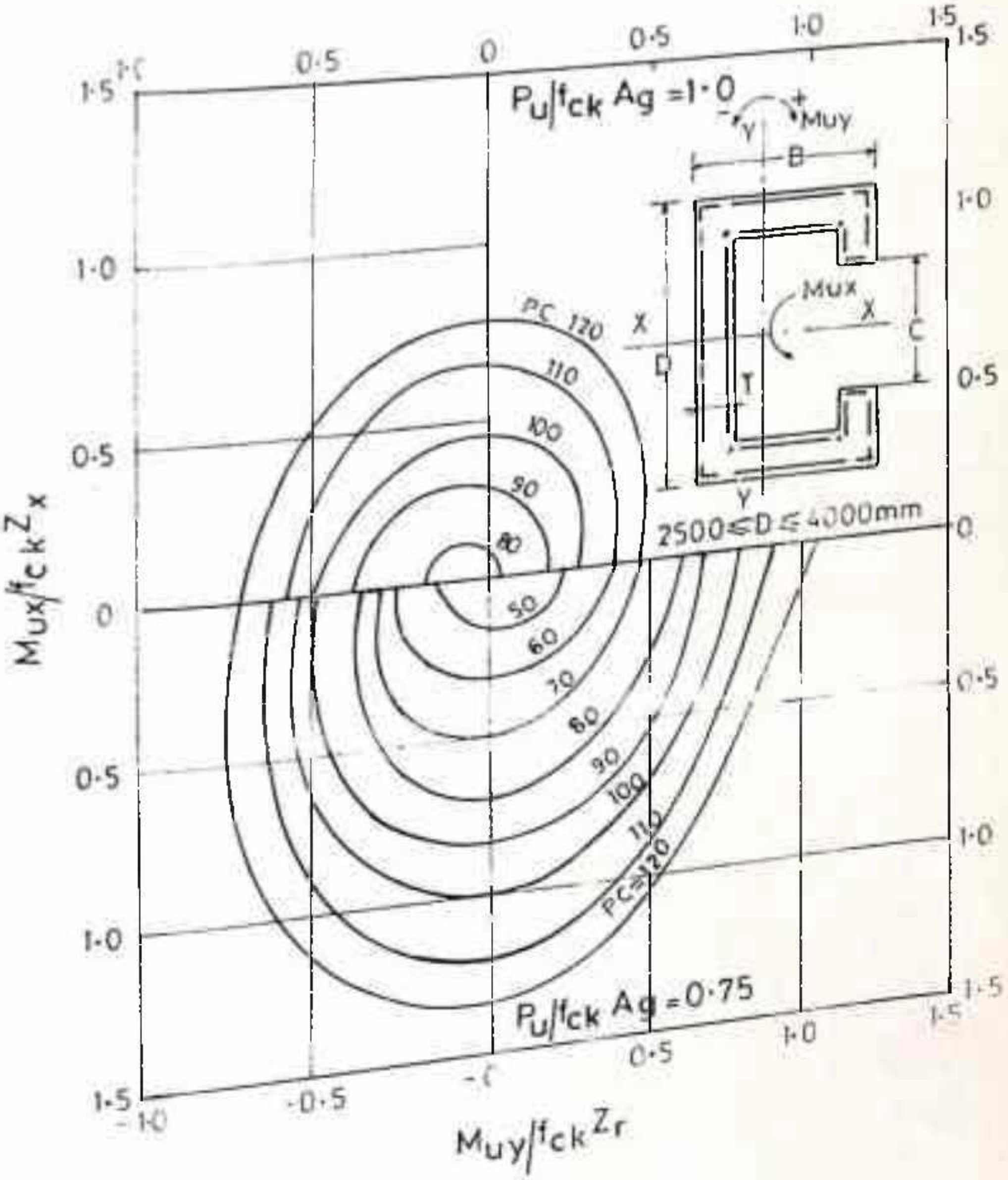

CHART-A2·10DESIGN CHART FOR RECTANGULAR CEE COLUMNS

$D/B = 3\cdot0$; $d'/D = 0\cdot012$; $D/T = 15$; $C = 1000$

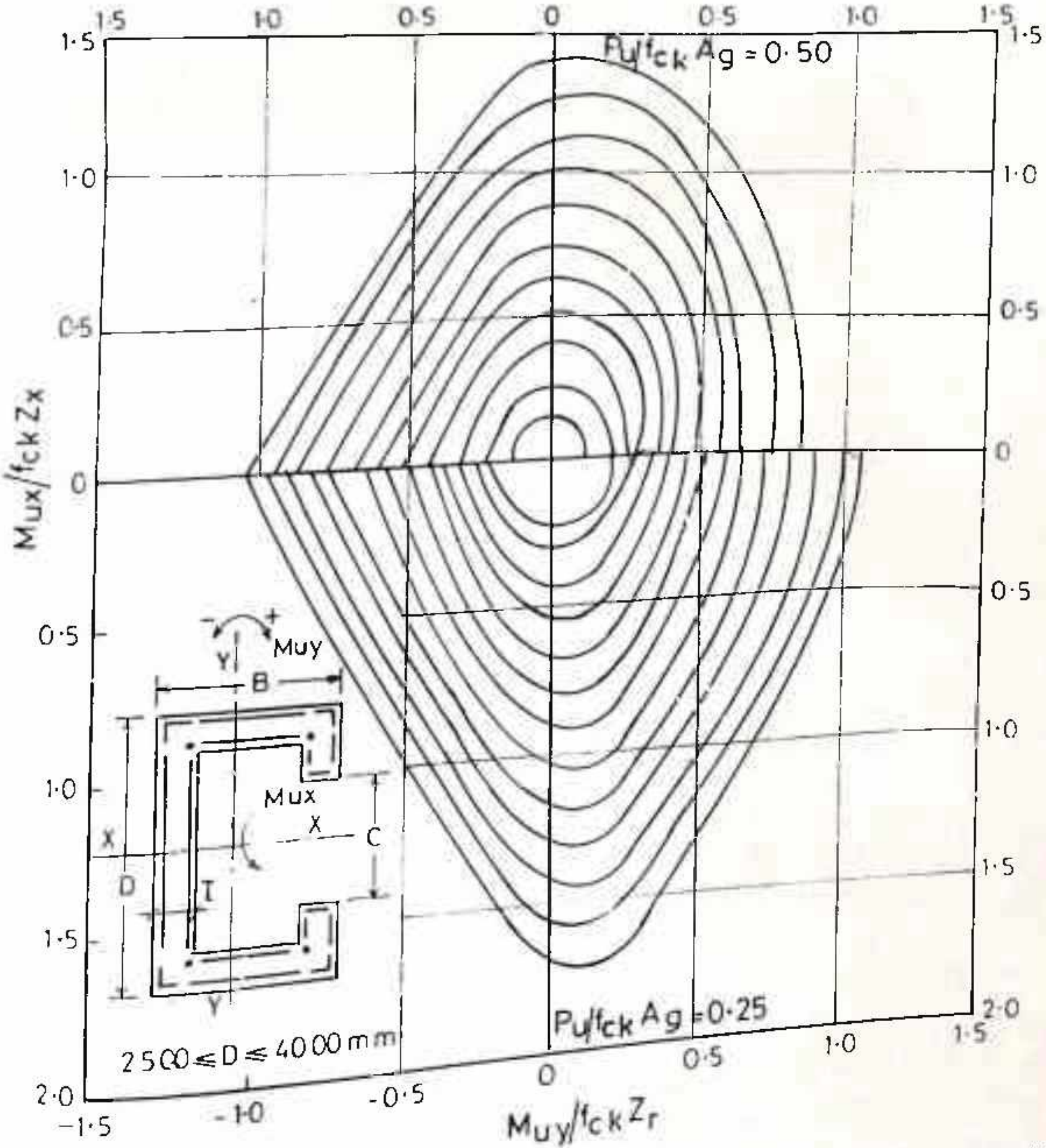

CHART-A2-11 DESIGN CHART FOR RECTANGULAR CEE COLUMNS
D/B = 4·0 ; d'/D = 0·012 ; D/T = 15 ; C = 1000

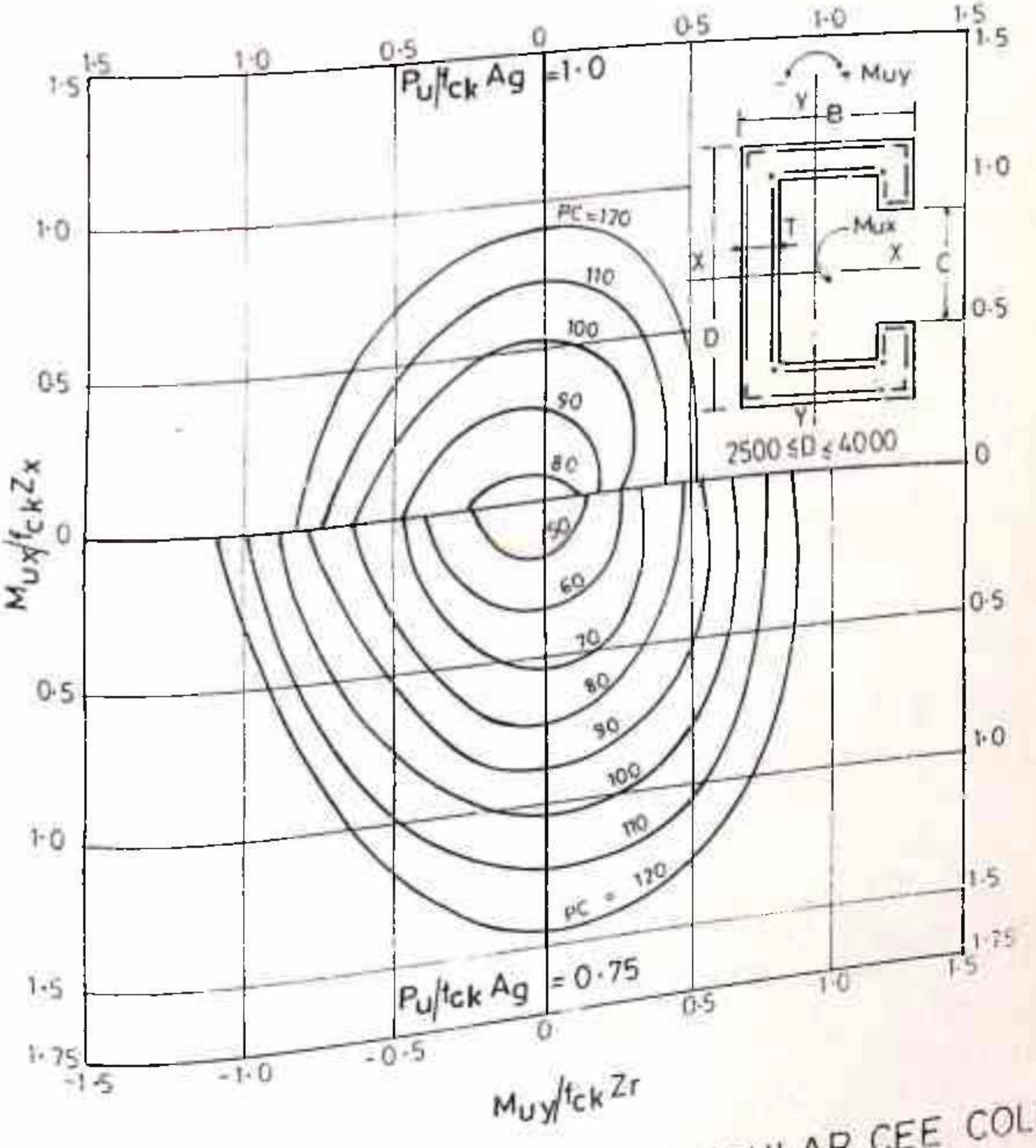

CHART-A2.12 DESIGN CHART FOR RECTANGULAR CEE COLUMNS

D/B = 4·0 ; d'/D = 0·012 ; D/T = 15 ; C = 1000

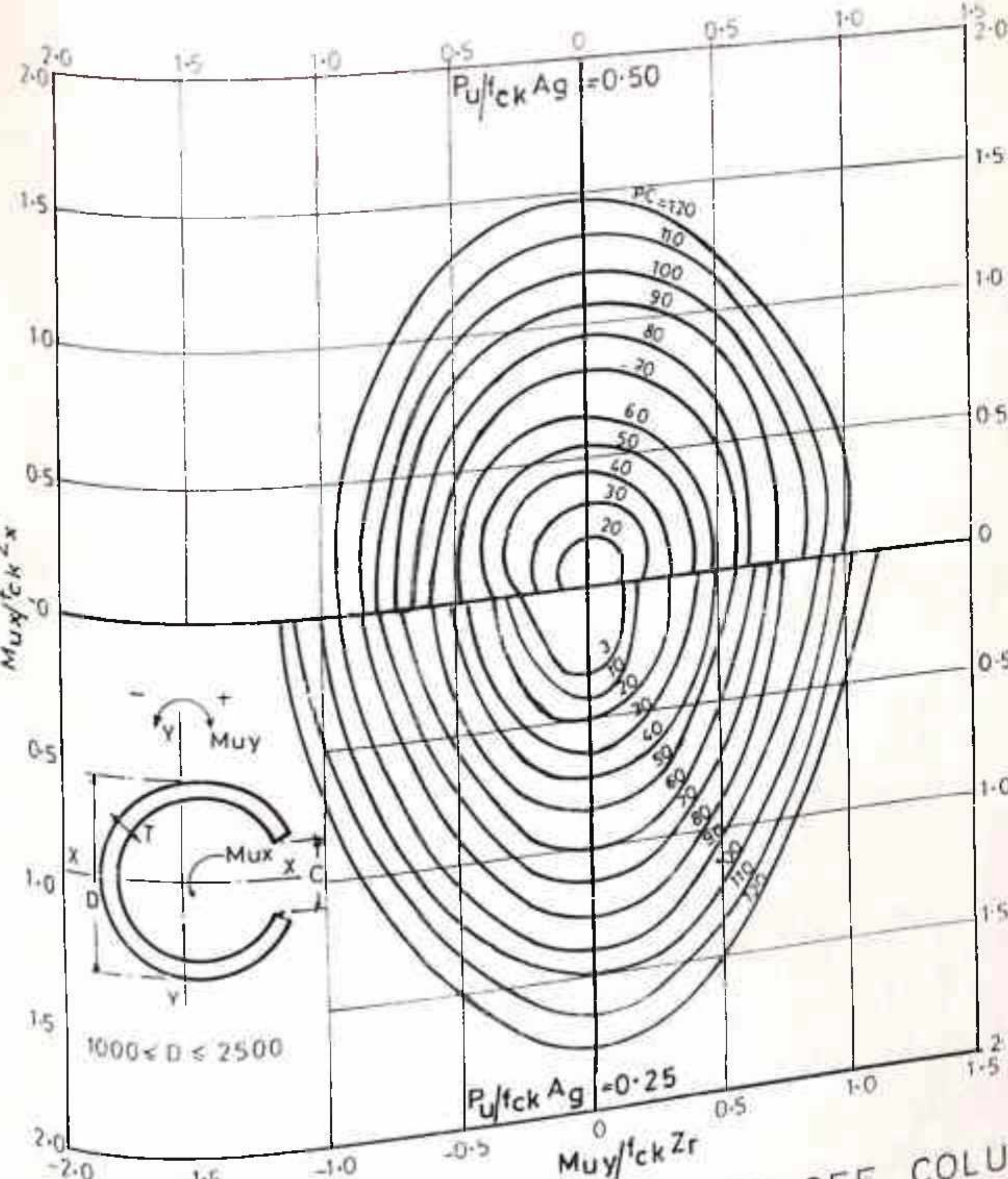

CHART-A2·13DESIGN CHART FOR CIRCULAR CEE COLUMN

$d'/D = 0{\cdot}03$; $D/T = 5$; $C = 600$

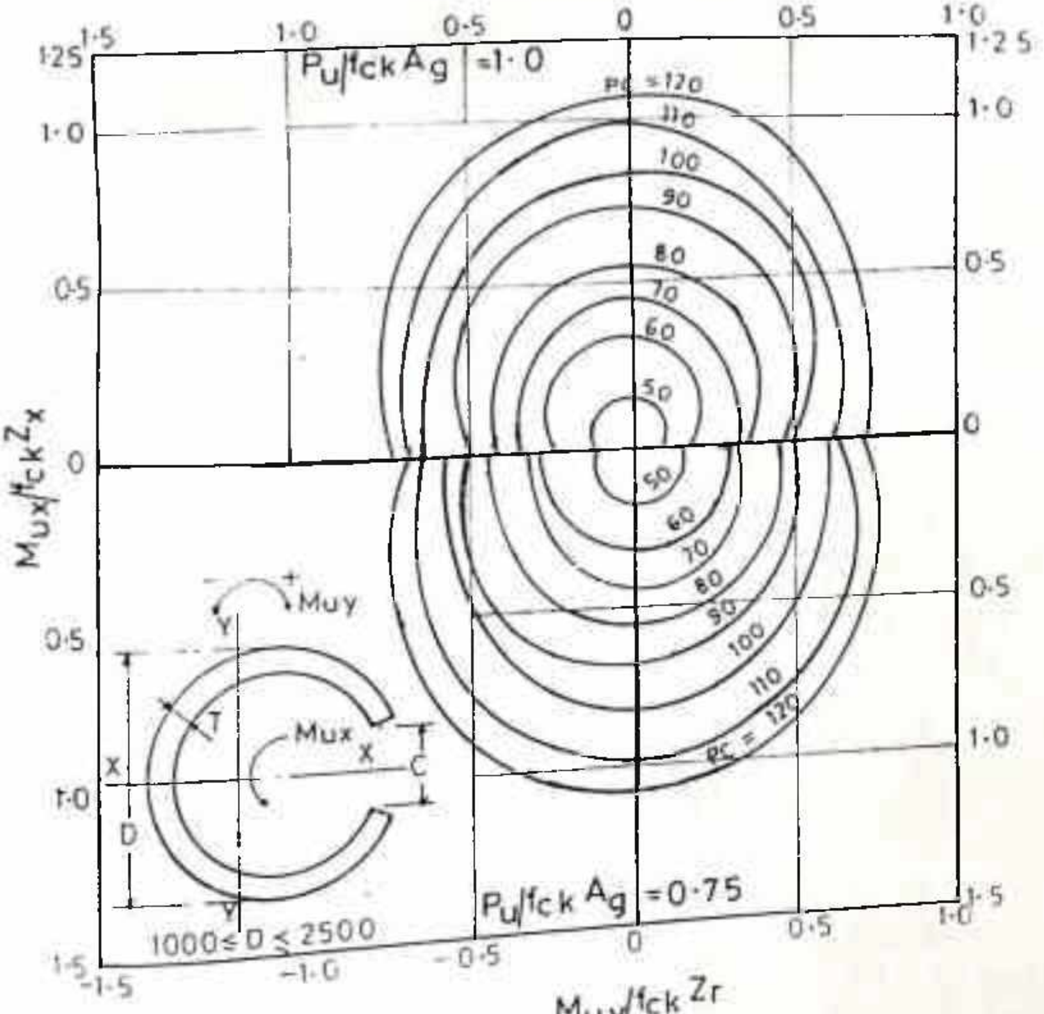

CHART-A2·14 DESIGN CHART FOR CIRCULAR CEE COLUMN

$d'/D = 0\cdot03$; $D/T = 5$; $C = 600$

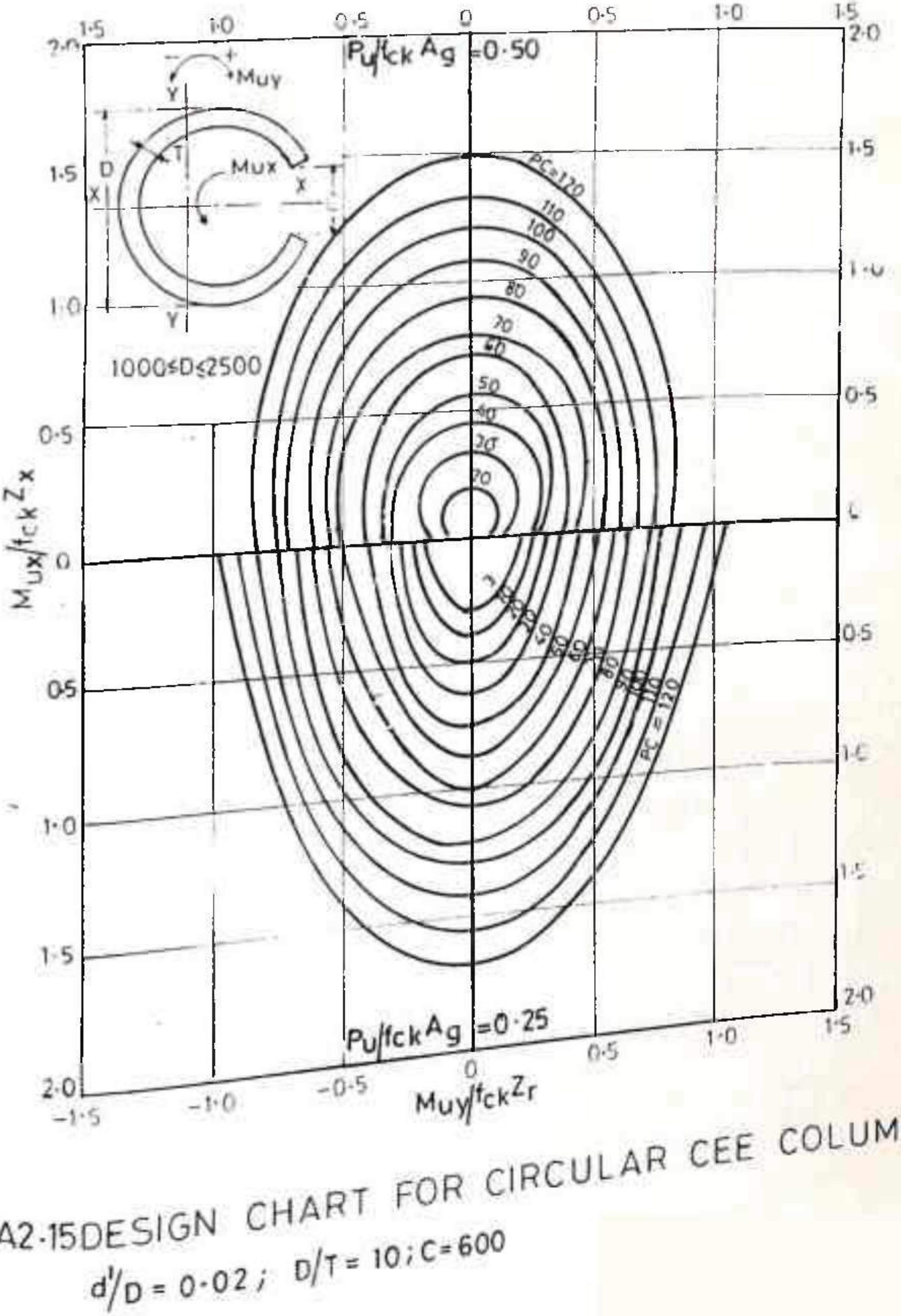

CHART-A2-15DESIGN CHART FOR CIRCULAR CEE COLUMN

$d'/D = 0{\cdot}02$; $D/T = 10$; $C=600$

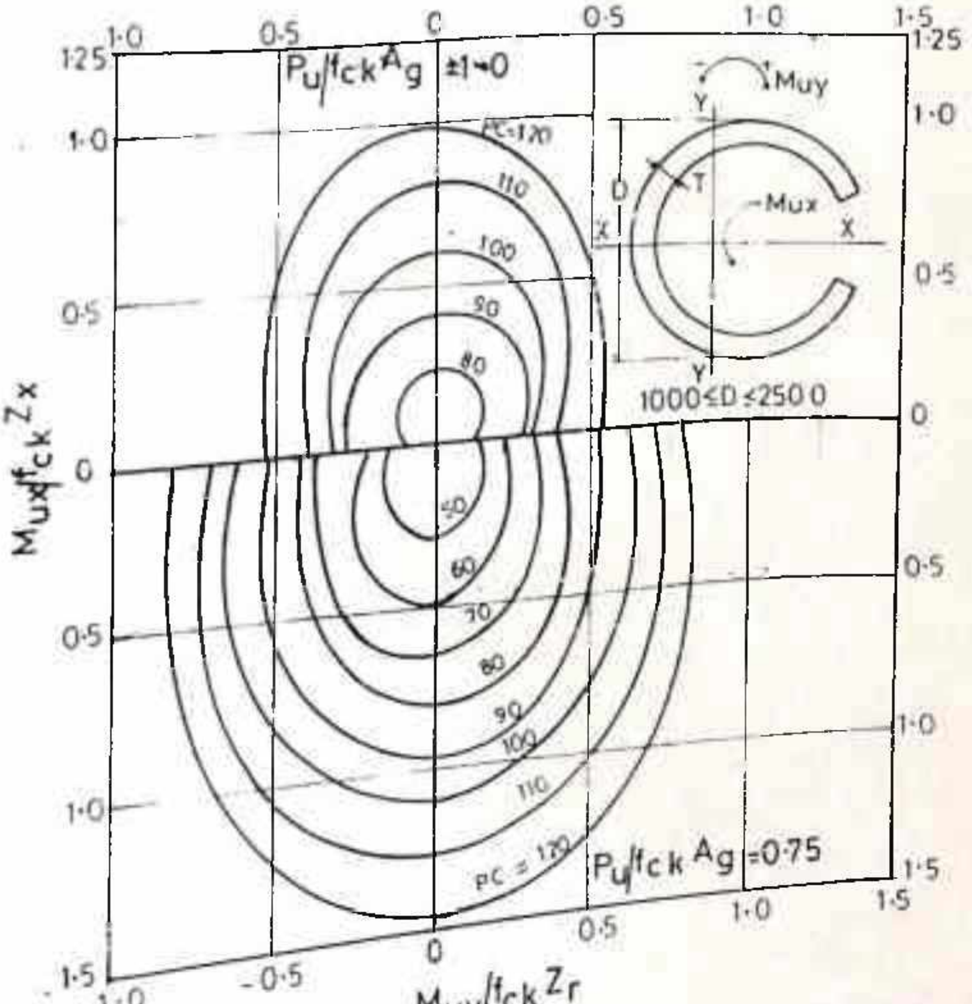

CHART-A 2·16 DESIGN CHART FOR CIRCULAR CEE COLUMN

$d'/D = 0.02$; $D/T = 10$; $C = 600$

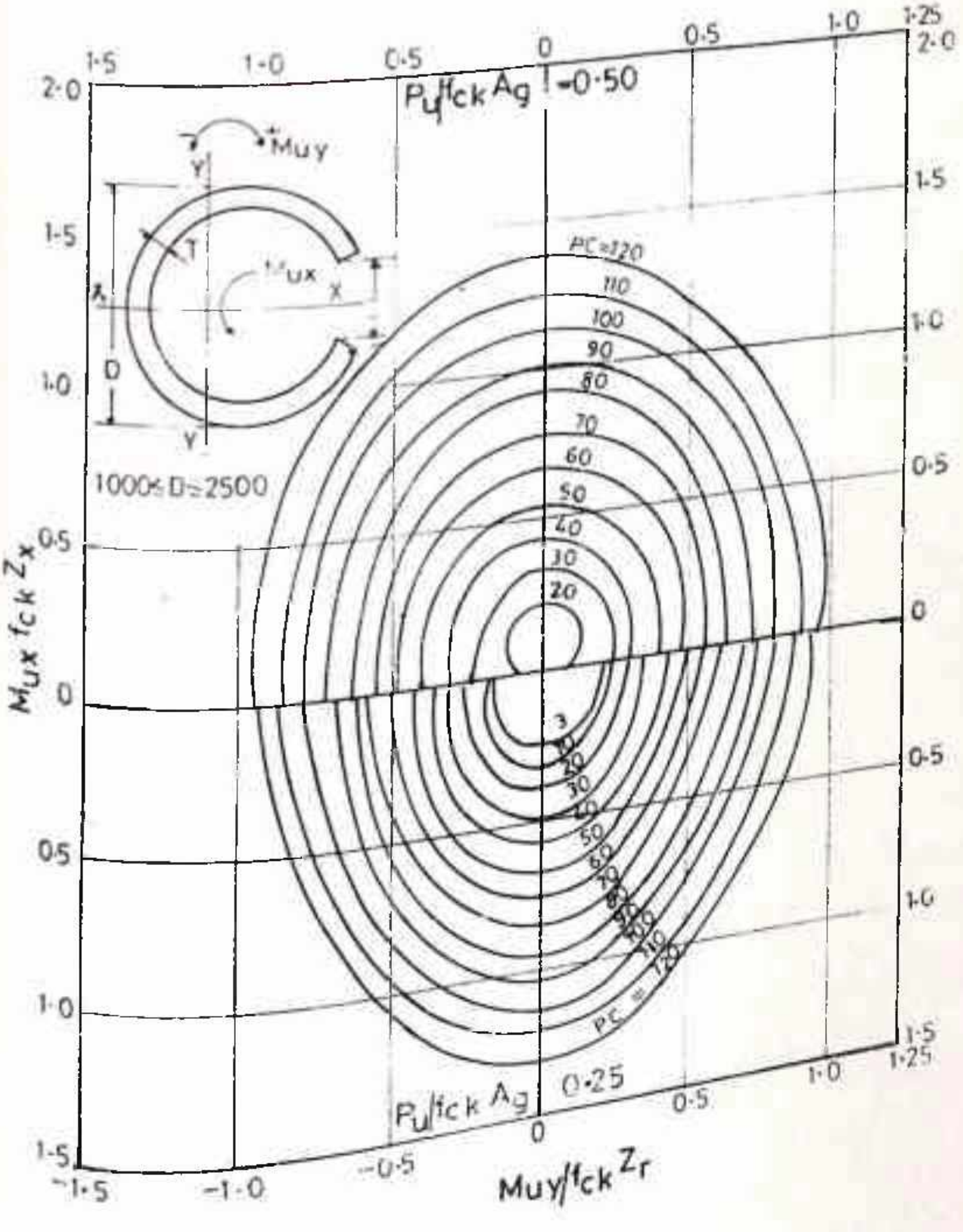

ART-A2.17 DESIGN CHART FOR CIRCULAR CEE COLUMN

$d^1/D = 0{\cdot}02$; $D/T = 7{\cdot}5$; $C = 800$

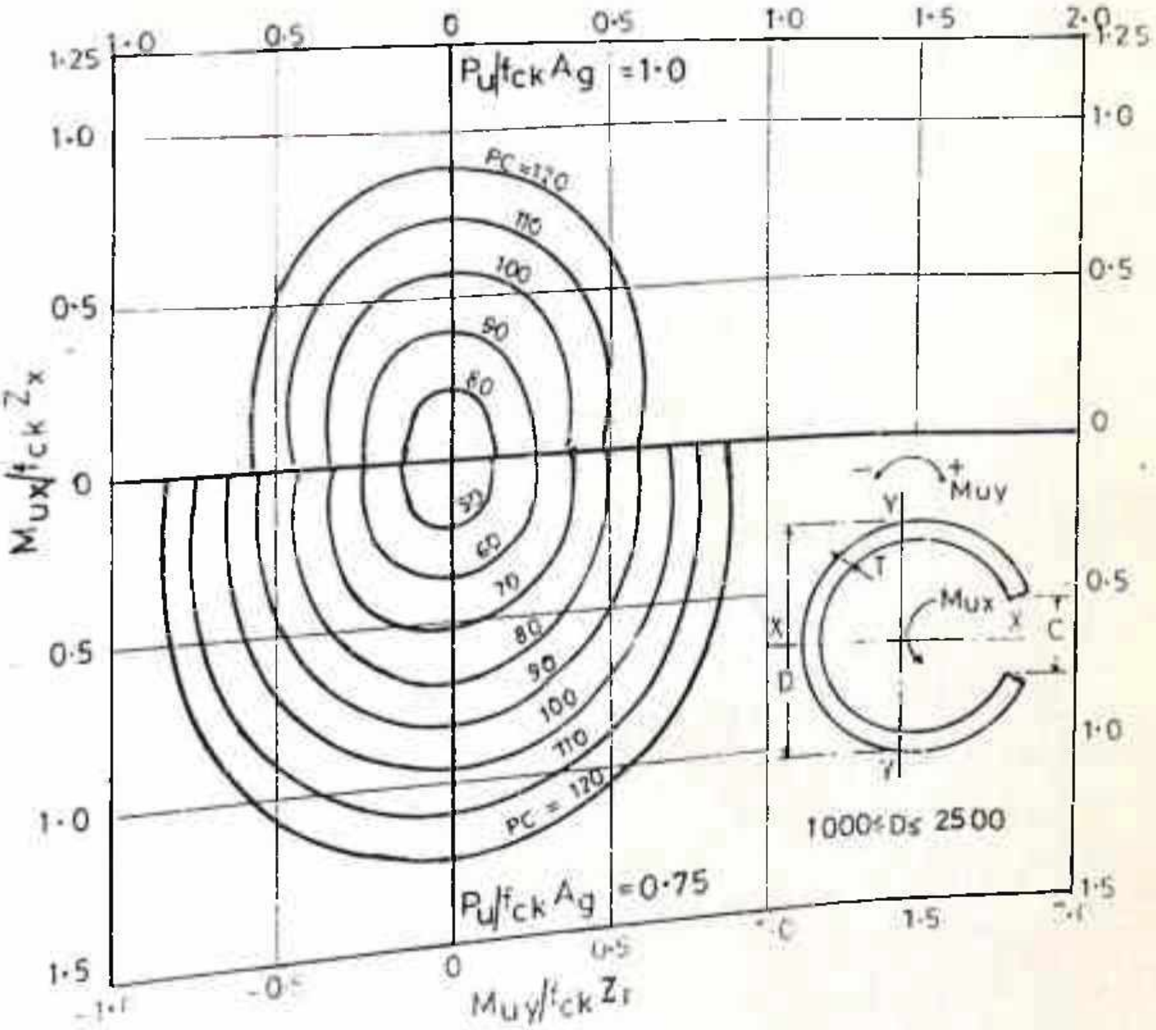

CHART-A2·18 DESIGN CHART FOR CIRCULAR CEE COLUMN

$d'/D = 0{\cdot}02$; $D/T = 7{\cdot}5$, $C = 800$

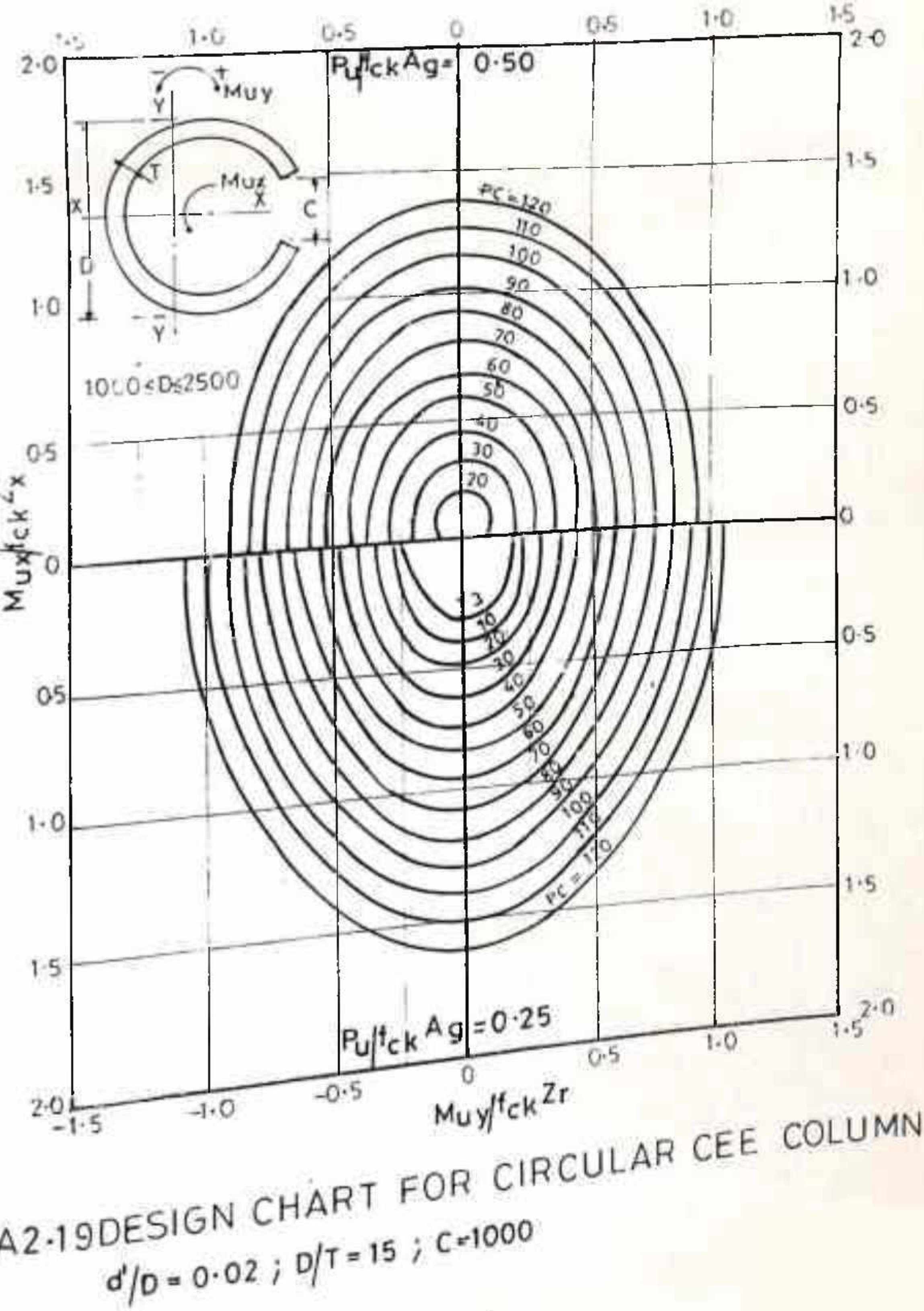

CHART-A2·19 DESIGN CHART FOR CIRCULAR CEE COLUMN

$d'/D = 0.02$; $D/T = 15$; $C = 1000$

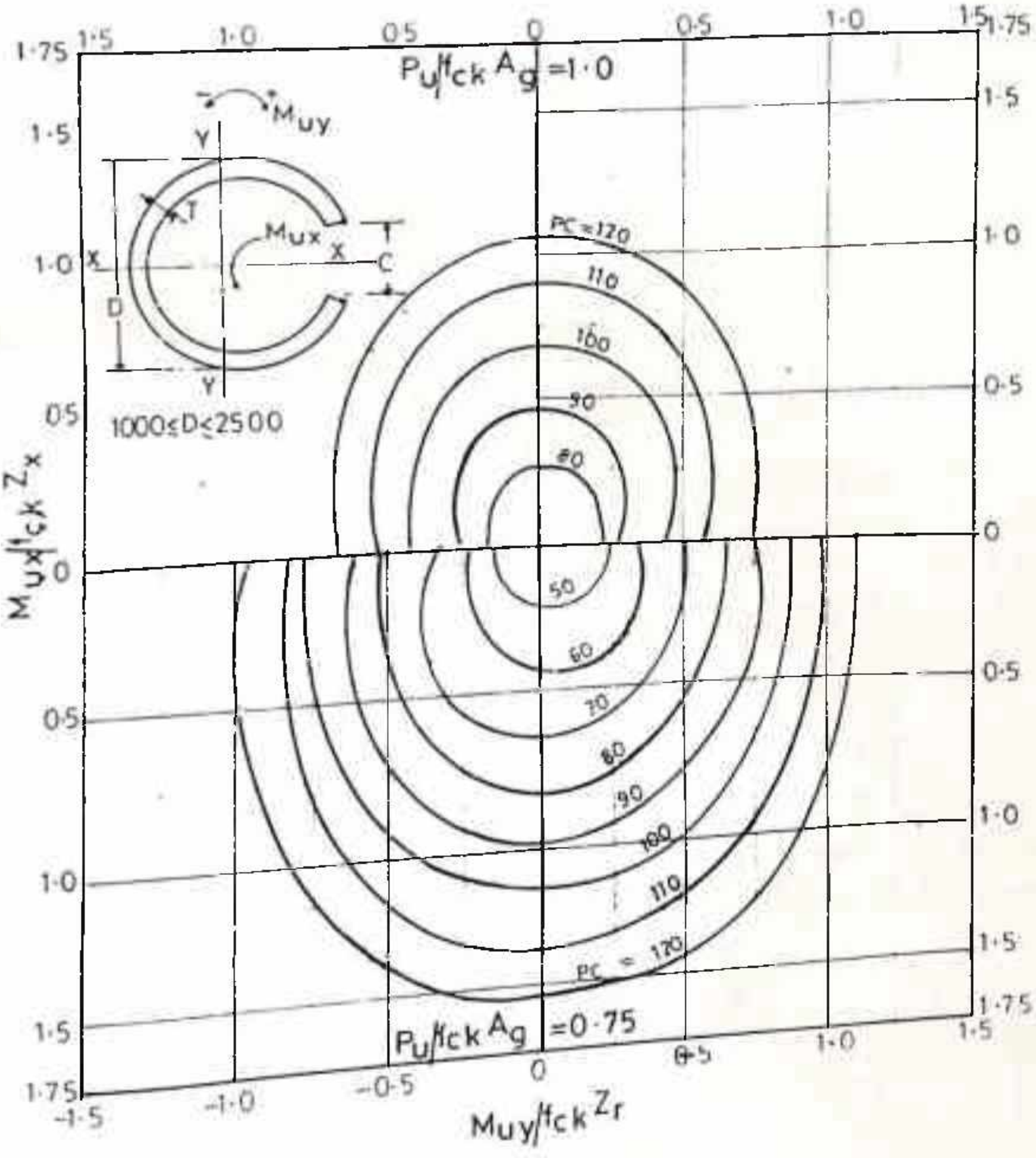

CHART-A2·20 DESIGN CHART FOR CIRCULAR CEE COLUMN

$d/D = 0 \cdot 02$; $D/T = 15$; $C = 1000$

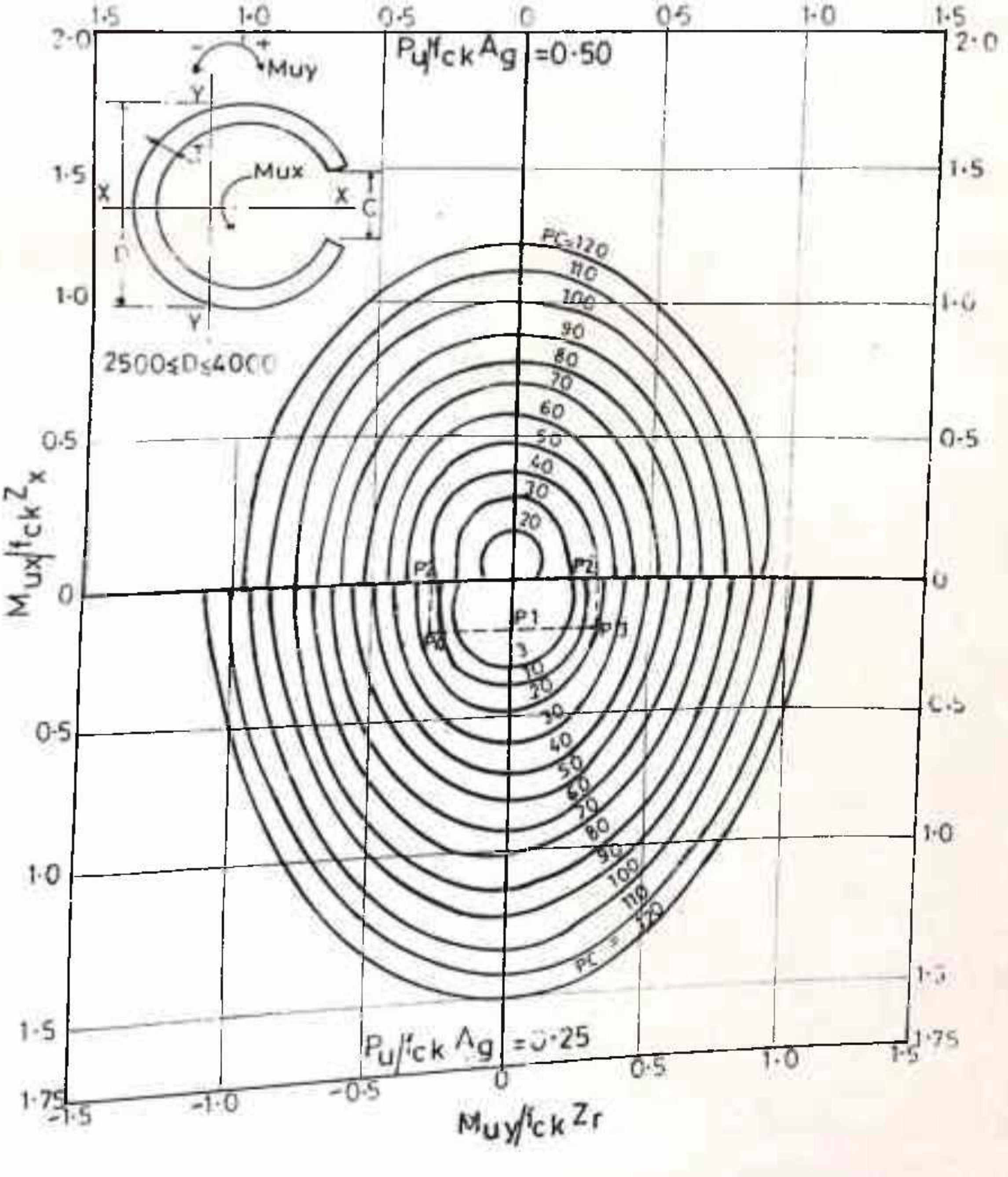

CHART A2·21 DESIGN CHART FOR CIRCULAR CEE COLUMN

$d'/D = 0{\cdot}012$; $D/T = 10$; $C = 1000$

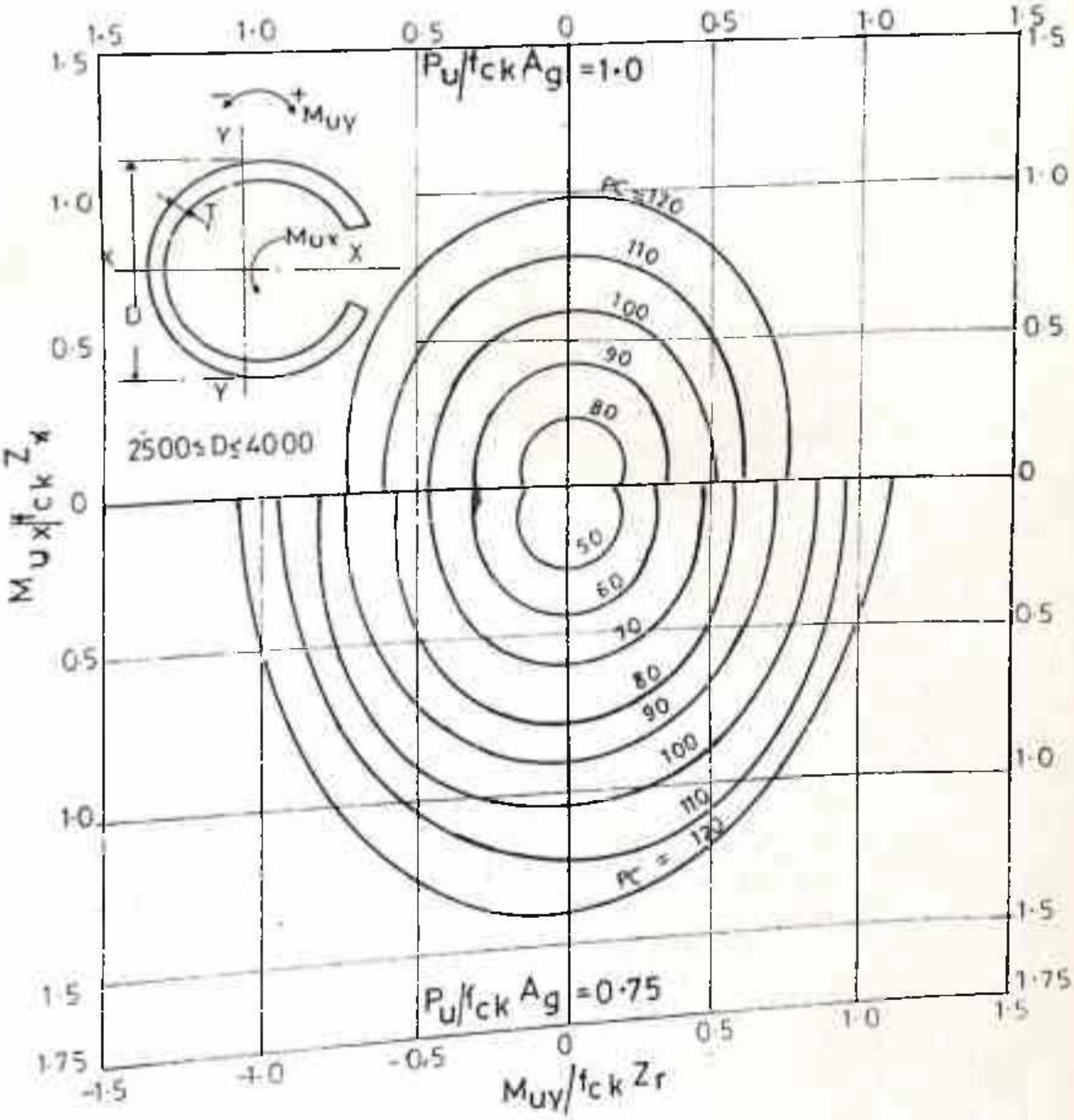

CHART-A 2·22DESIGN CHART FOR CIRCULAR CEE COLUMN

$d'/D = 0.02$; $D/T = 15$; $C = 1000$

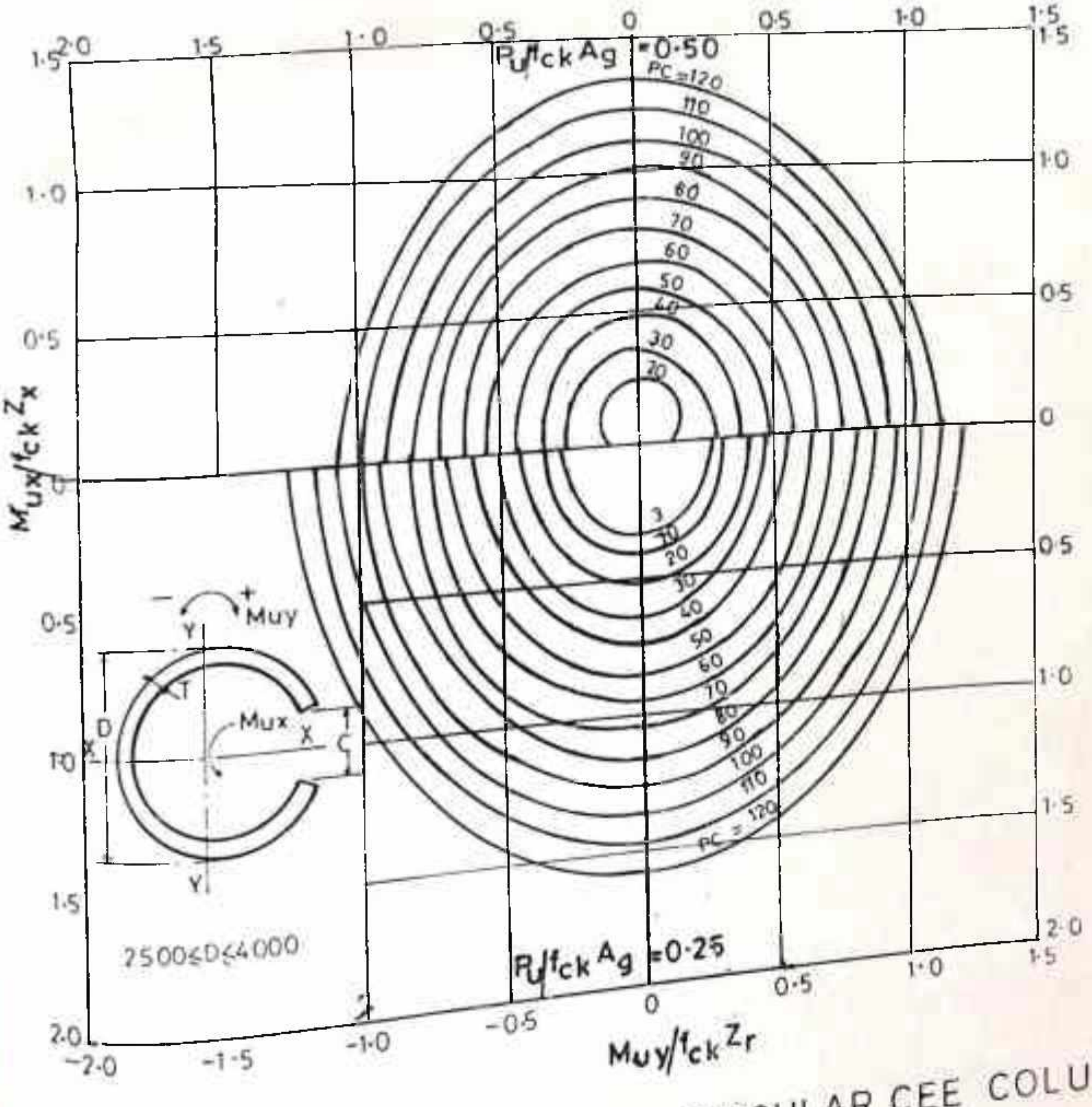

CHART-A2·23 DESIGN CHART FOR CIRCULAR CEE COLUMN

$d'/D = 0{\cdot}012$; $D/T = 15$; $C = 1000$

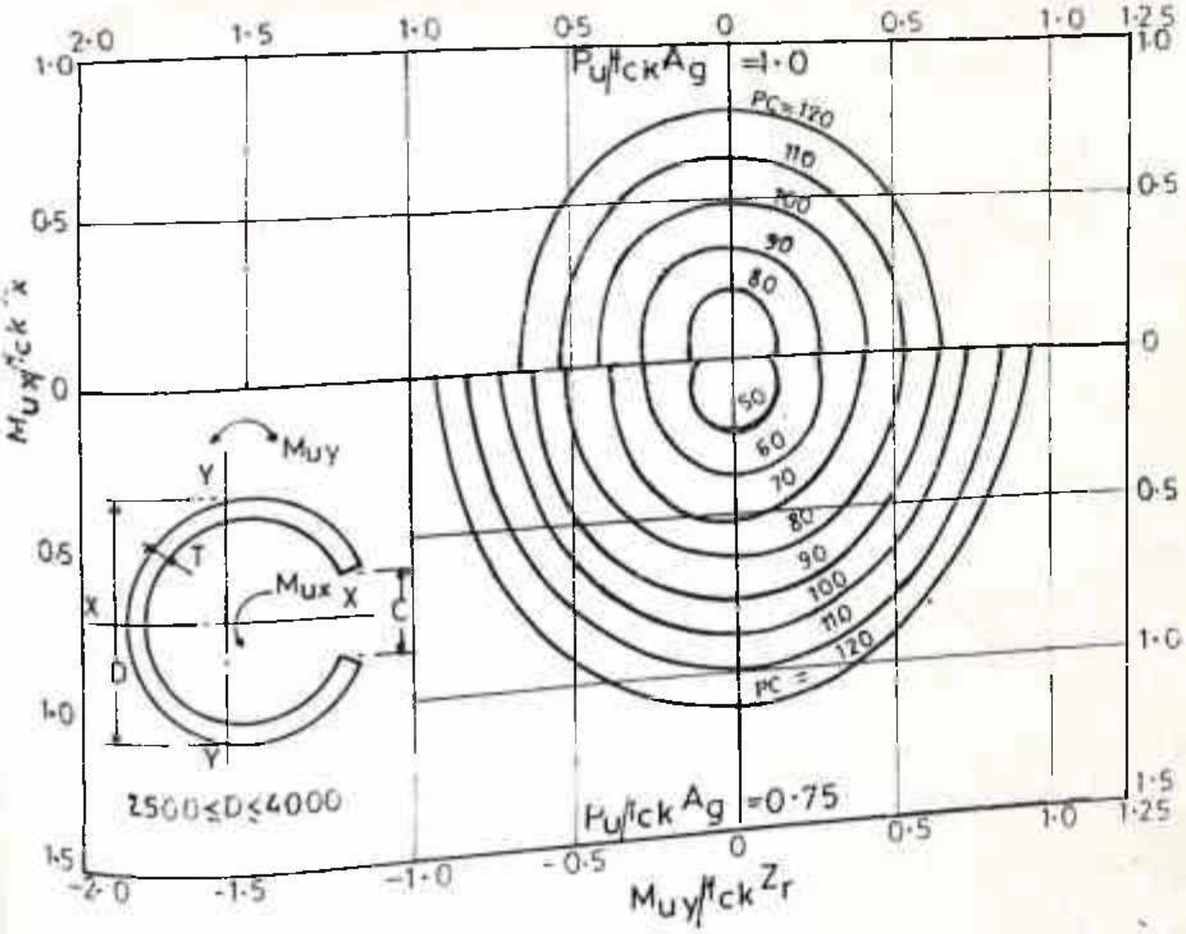

CHART-A2.24 DESIGN CHART FOR CIRCULAR CEE COLUMN

$d'/D = 0{\cdot}012$; $D/T = 15$; $C = 1000$

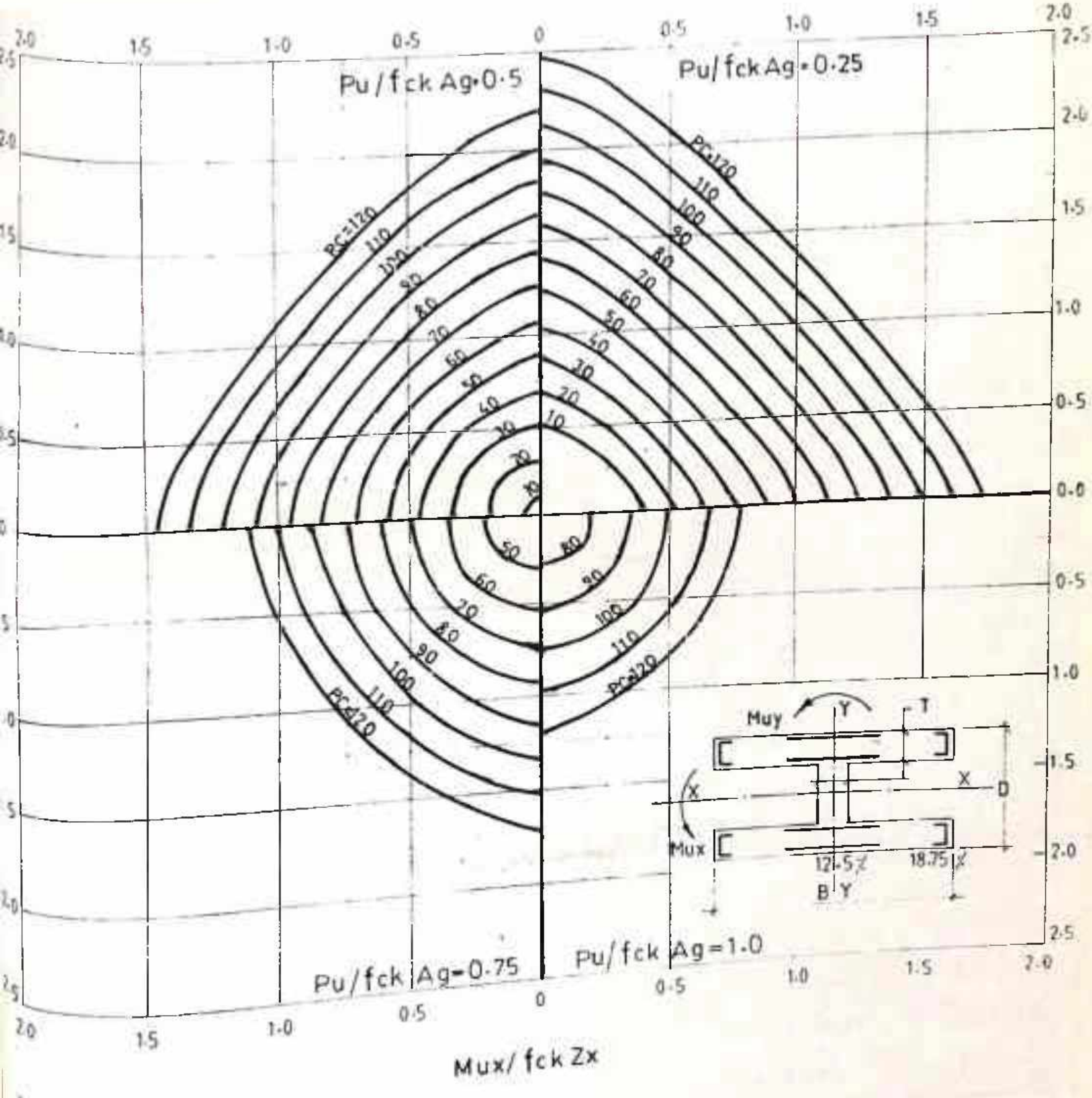

CHART-A3-1 DESIGN CHART FOR I/H-SHAPED COLUMNS

$D/B = 0{\cdot}5$; $d'/D = 0{\cdot}06$; $D/T = 3$

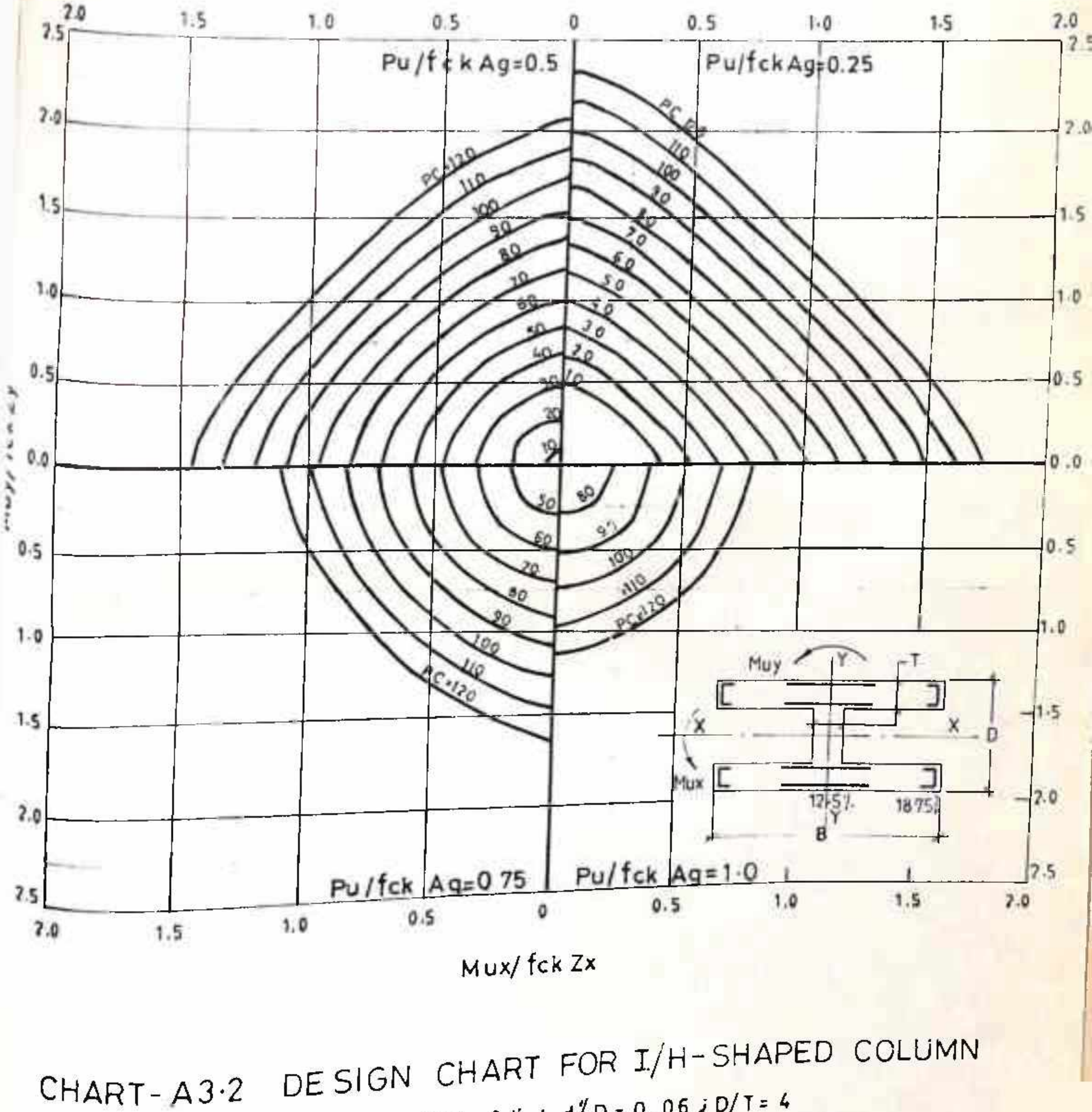

CHART- A3·2 DESIGN CHART FOR I/H-SHAPED COLUMN

D/B = 0.5 ; d′/D = 0.06 ; D/T = 4

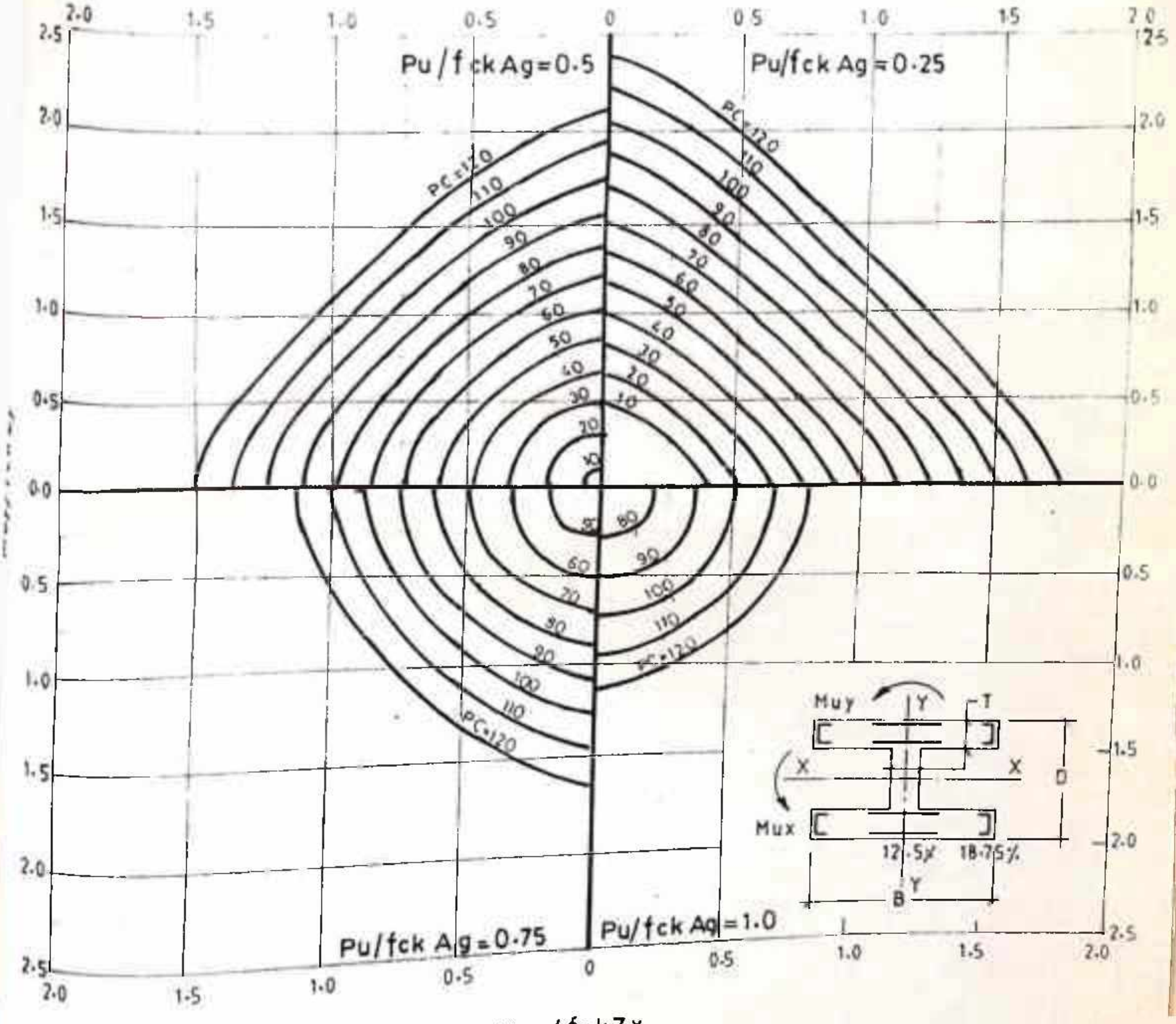

CHART-A3·3 DESIGN CHART FOR I/H-SHAPED COLUMNS
D/B = 0.667 ; d'/D = 0.06 ; D/T = 3

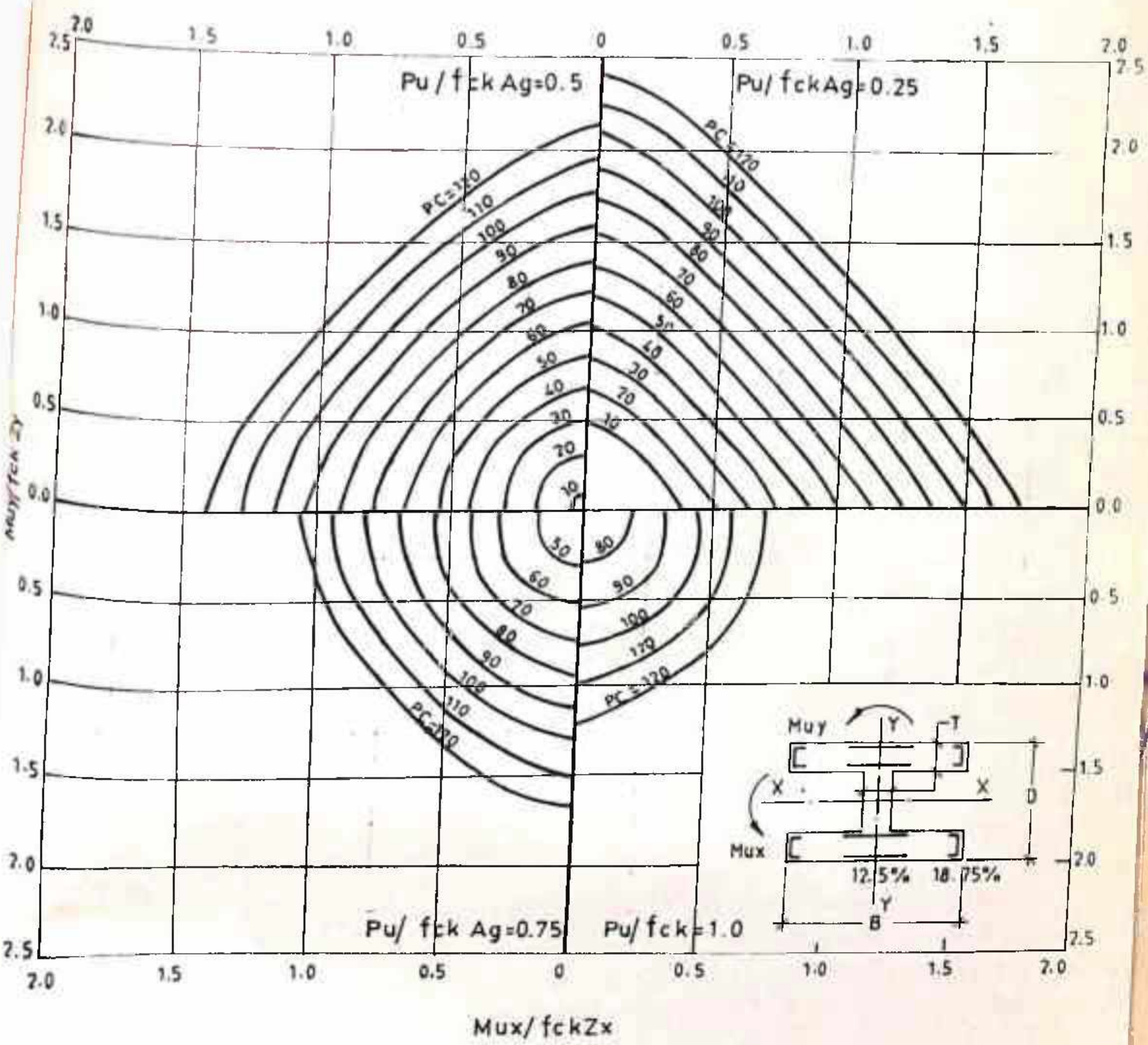

CHART- A3·4 DESIGN CHART FOR I/H-SHAPED COLUMN

D/B = 0.667 ; d'/D = 0.06 ; D/T = 4

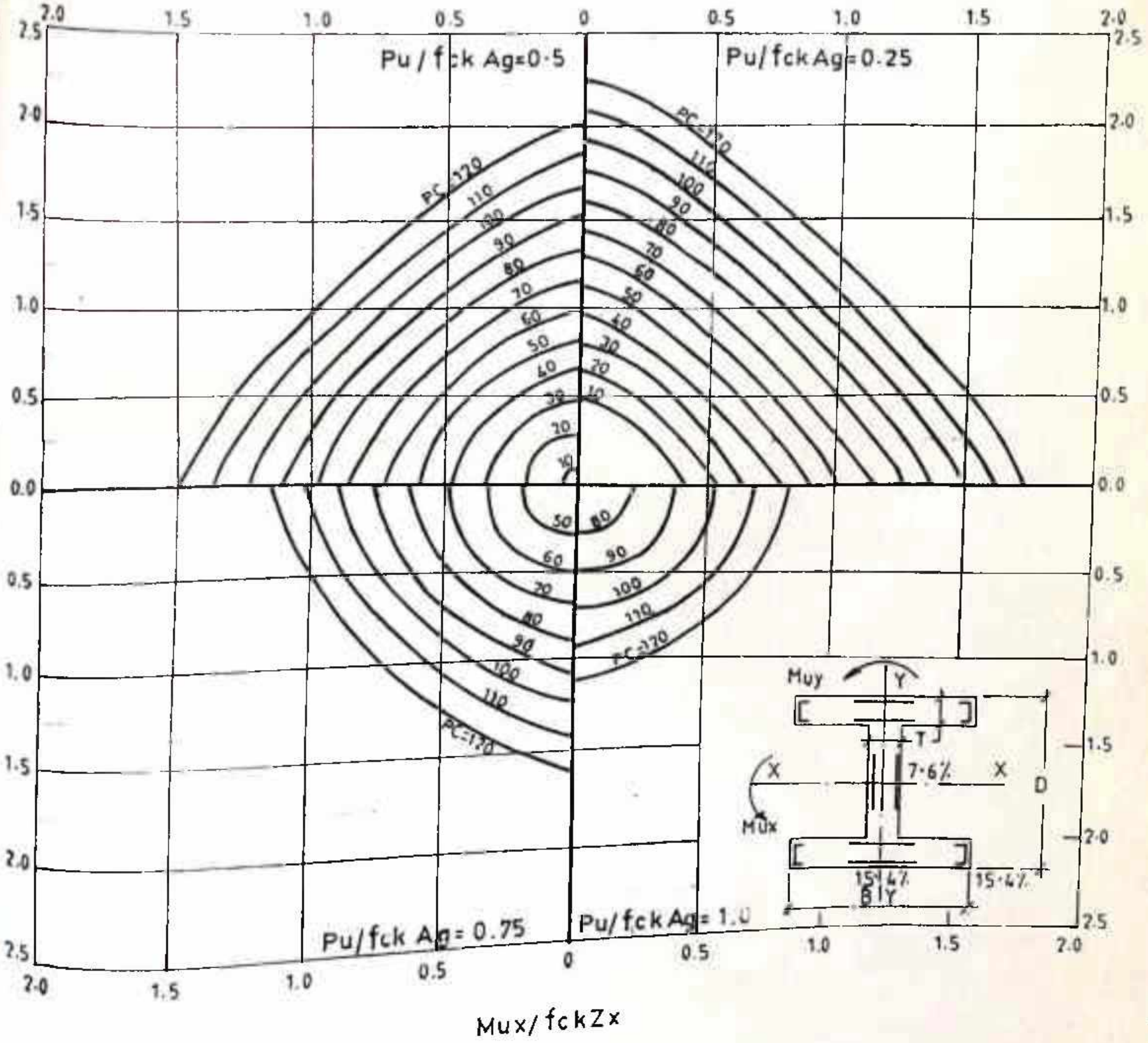

CHART - A3·5 DESIGN CHART FOR I/H - SHAPED COLUMNS

D/B = 1.0 ; d'/D= 0.05 ; D/T= 3

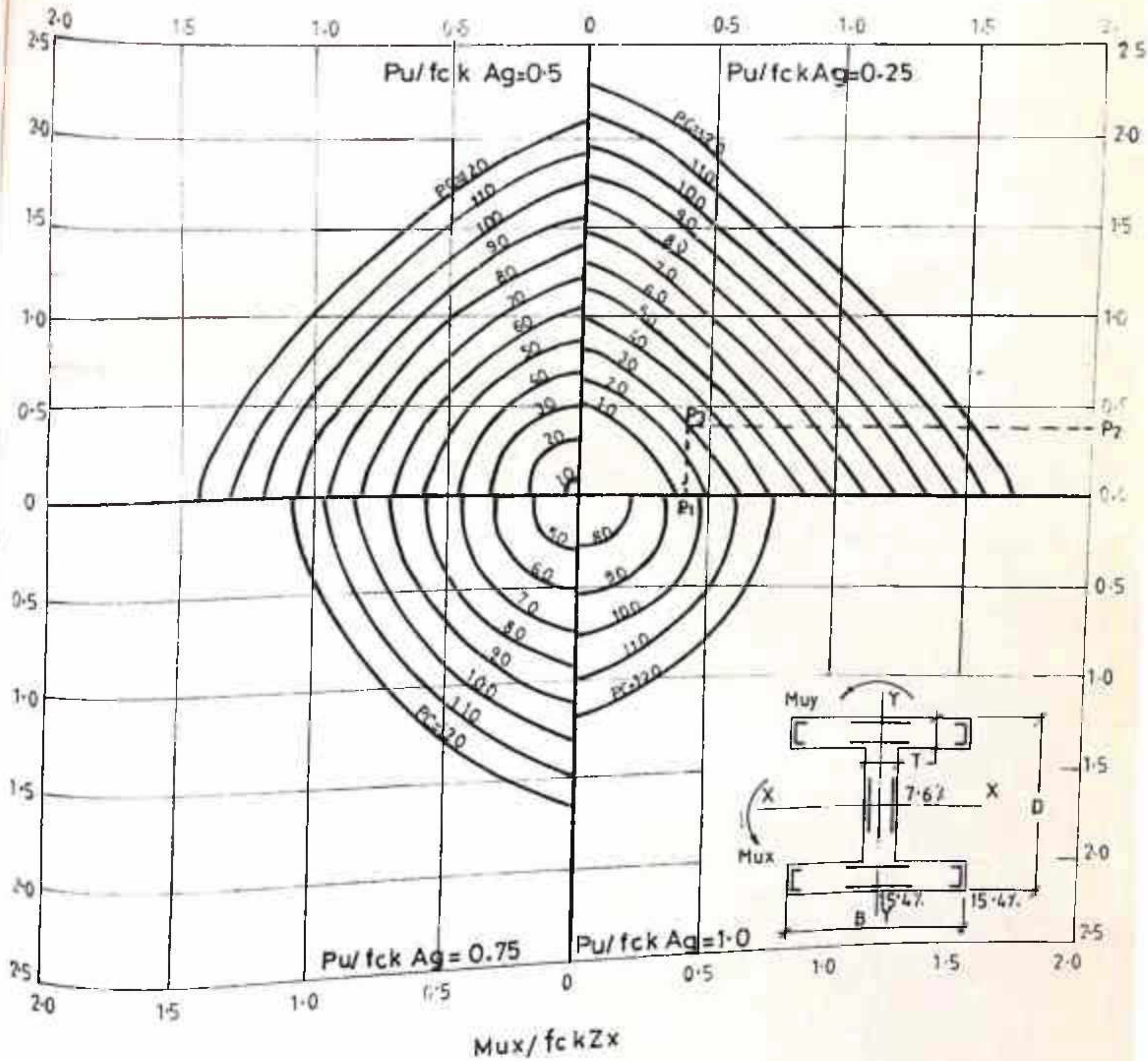

CHART A3·6 DESIGN CHART FOR I/H - SHAPED COLUMNS
D/B = 1. 0 ; d'/D= 0.05 ; D/T= 4

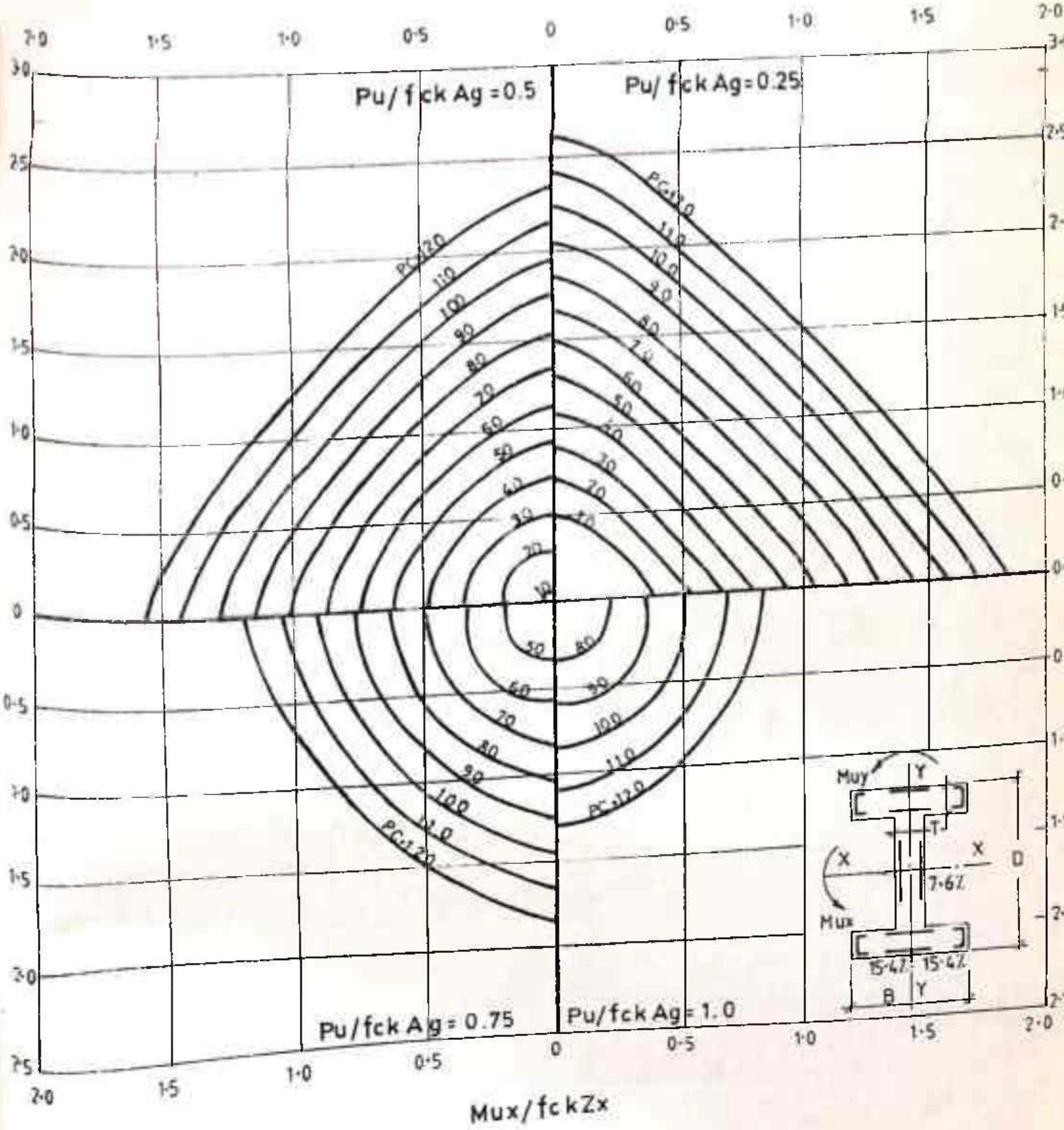

CHART-A3-7 DESIGN CHART FOR I/H-SHAPED COLUMNS

D/B = 1.5 ; d′/D = 0.03 ; D/T = 4

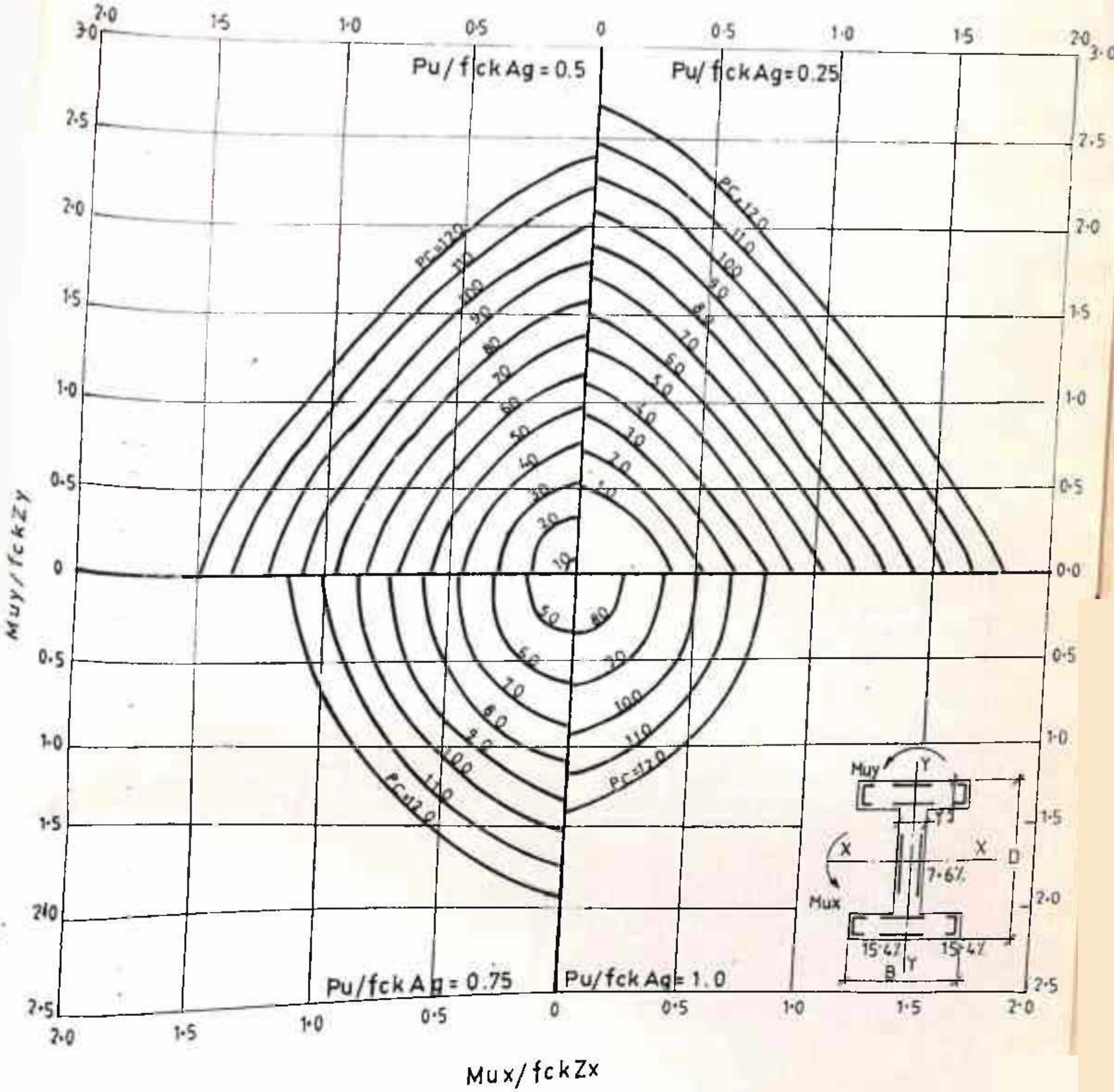

CHART-A3·8 DESIGN CHART FOR I/H-SHAPED COLUMNS

D/B = 1.5 ; d'/D = 0.03 ; D/T = 5

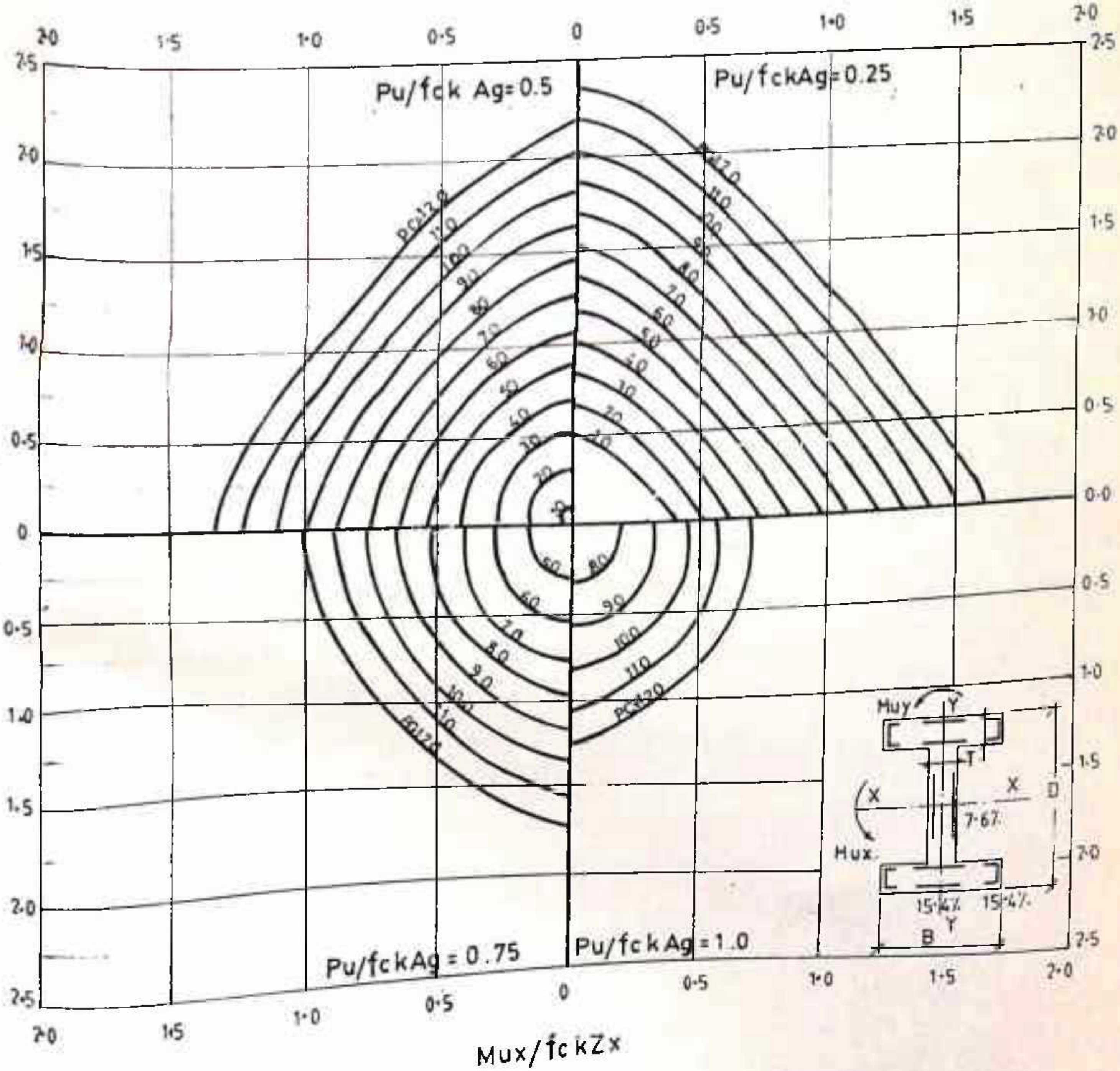

CHART-A3·9 DESIGN CHART FOR I/H-SHAPED COLUMNS

D/B= 1.5 ; d'/D= 0.05 ; D/T= 4

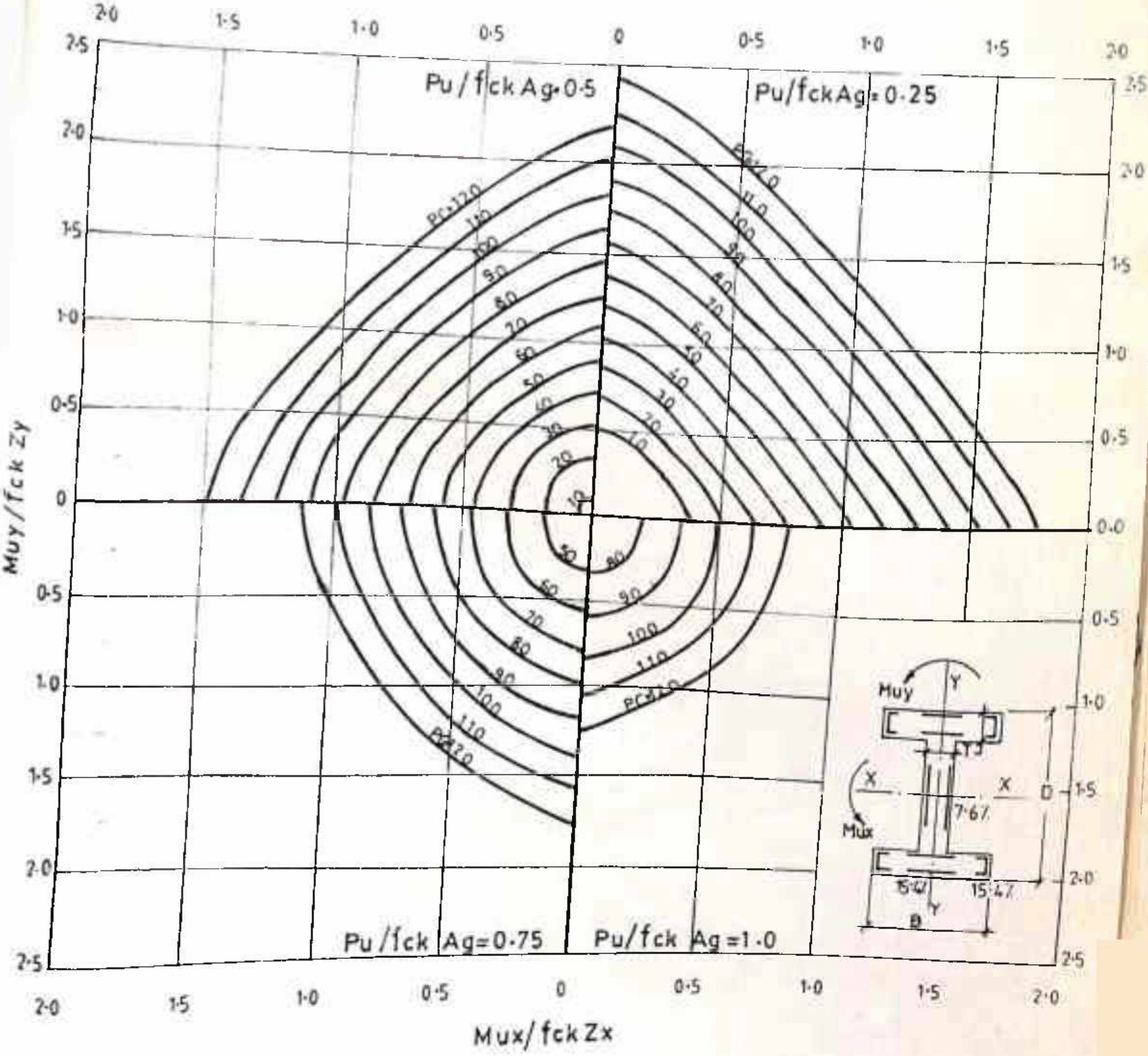

CHART- A3·10 DESIGN CHART FOR I/H- SHAPED COLUMNS

$D/B = 1.5$; $d'/D = 0.05$; $D/T = 5$

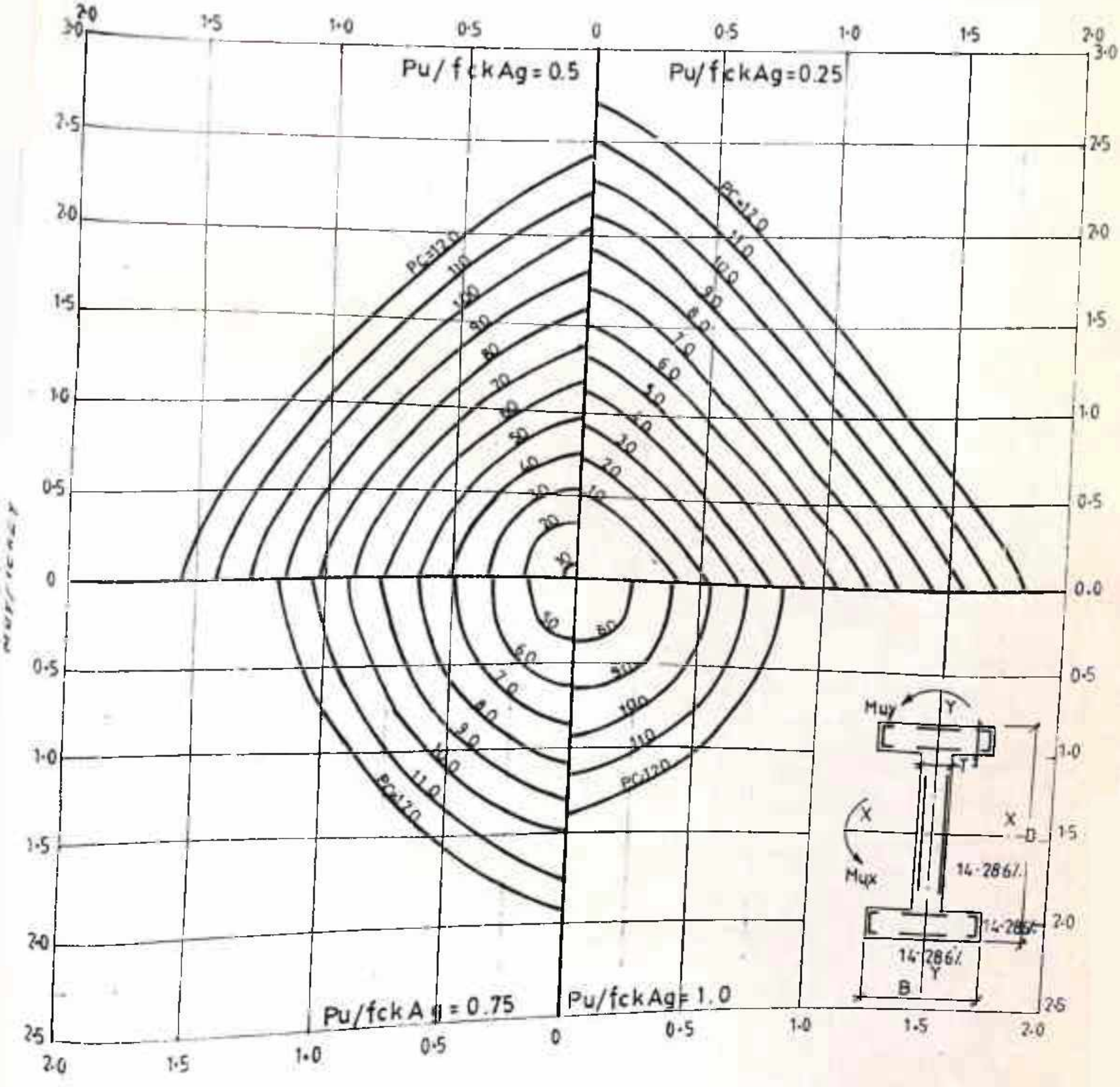

CHART-A3.11 DESIGN CHART FOR I/H-SHAPED COLUMNS

D/B = 2.0 ; d′/D = 0.03 ; D/T = 5

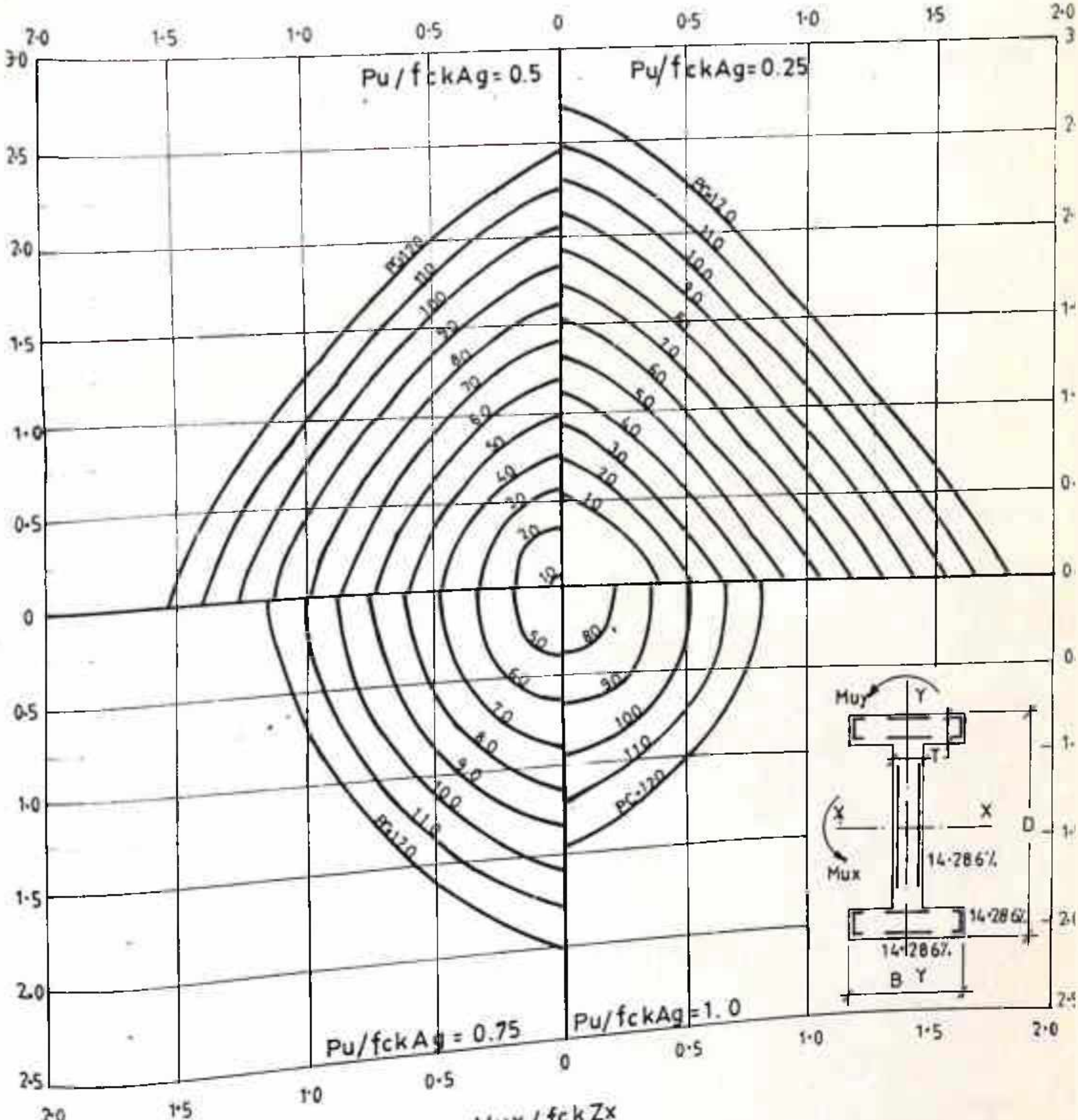

CHART-A3·12 DESIGN CHART FOR I/H-SHAPED COLUMNS

D/B = 2.0 ; d'/D = 0.03 ; D/T = 6

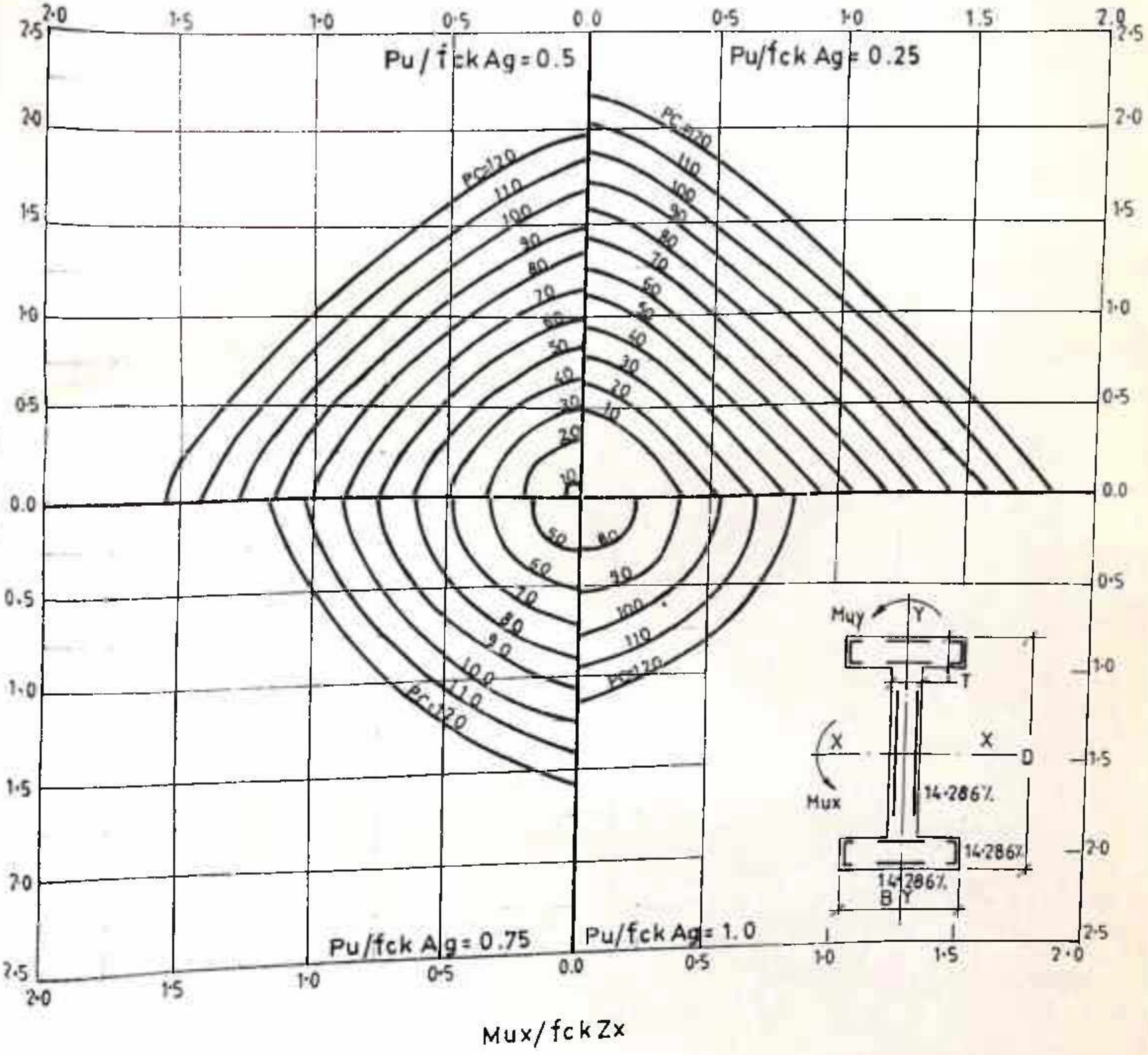

CHART-A3·13 DESIGN CHART FOR I/H-SHAPED COLUMNS

D/B = 2.0 ; $d'/D = 0.05$; D/T = 5

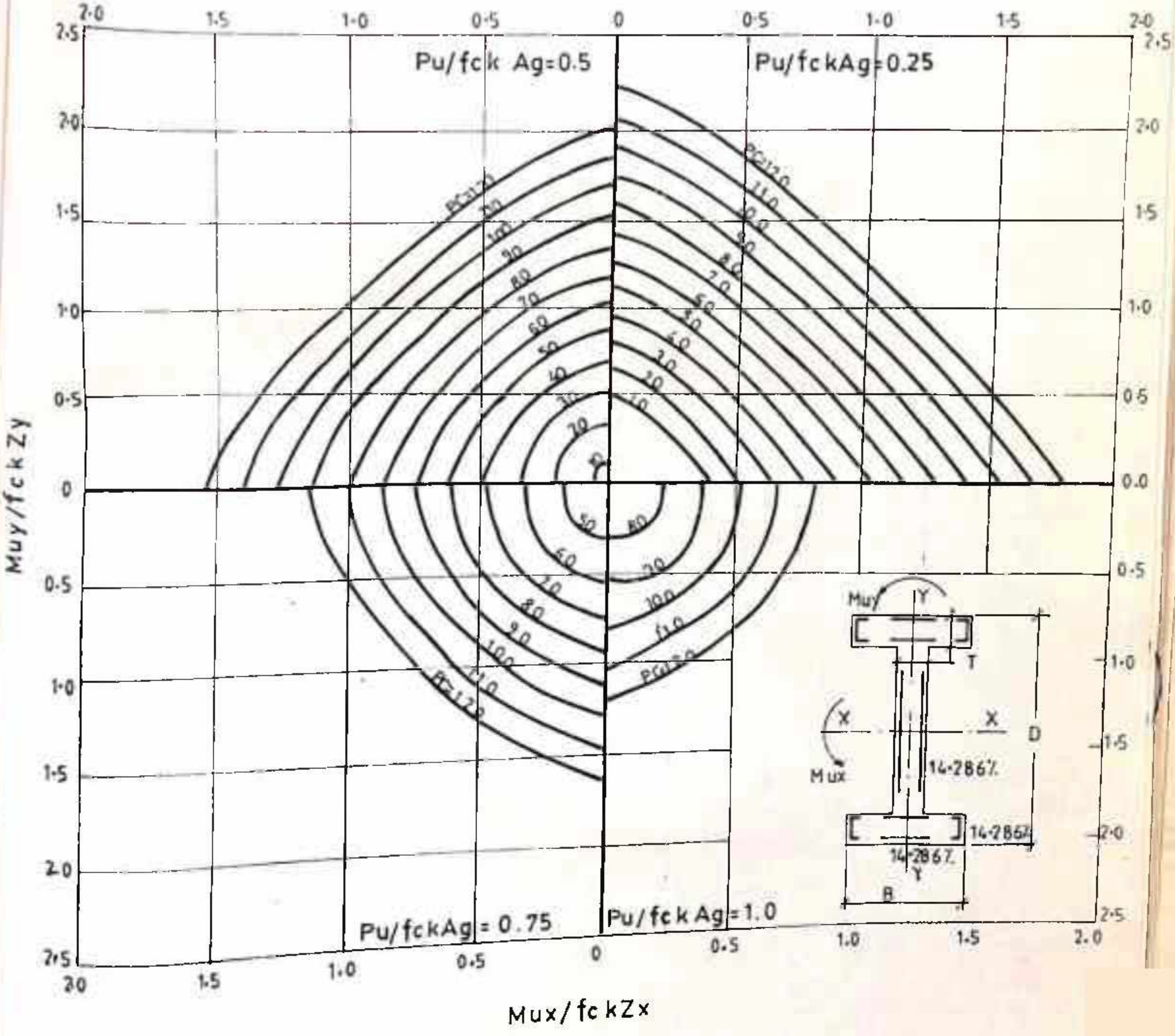

CHART-A3·14DESIGN CHART FOR I/H-SHAPED COLUMNS

D/B = 2.0 ; d′/D= 0.05 ; D/T= 6

BIBLIOGRAPHY

1. Aas-Jacobsen A.; "Biaxial Eccentricities In Ultimate Load Design"; ACI Journal, Proceedings, 61, March, 1964, pp. 293-315.
2. Abdel-Sayed S.I. and Gardner; "Design of Symmetric Square Slender Reinforced Concrete Columns Under Biaxially Eccentric Loads"; Reinforced Concrete Columns (SP-50) : American Concrete Institute, Detroit, 1975, pp.149-164.
3. ACI Committee 105 ; " Reinforced Concrete Column Investigation" ; ACI Journal, Proceedings, 26, April,1930, pp. 601-612; Proc., 27, February, 1931, pp. 675-676; Proc., 28, November, 1931, pp. 157-158; Proc., 29, September, 1932, PP.53-56; February, 1933, pp. 275-284; Proc.,30, September - October 1933, PP.78-90; November, 1933,pp. 153-156.
4. ACI Committee 318; "Commentary on Building Code Requirements for Reinforced Concrete (ACI : 318-71)"; American Concrete Institute, Detroit, 1971 , 96 pp.
5. ACI Committee 340 ; Design Handbook In Accordance with Strength Design Method of ACI : 318-71; Vol. 1, ACI Special Publication SP-17 (73); American Concrete Institute, Detroit, 1973, 432 pp.
6. ACI Committee 340; Ultimate Strength Design Handbook; Vol.2, ACI Special Publication No. 17 A ; American Concrete Institute, Detroit, 1970, 226 pp

7. ACI Committee 439; "Uses and Limitations of High Strength Steel Reinforcement Fy > 60 ksi; ACI journal, Vol.70, No.2, February, 1973, pp. 77-104.

8. ACI-ASCE Committee 327;"Report on Ultimate Strength Design"; Proceedings, ASCE 81, October, 1955, Paper No. 809.

9. ACI-ASCE Committe 441;Reinforced Concrete Columns (annotated bibliography), ACI Bibliography No.5, American Concrete Institute, Detroit, 1965.

10. Anderson D.E.and E.S.Hoffman; "Column details under the 1963 ACI building code"; ACI Journal, Vol.62, February, 1965. pp.217-236.

11. Al-Noury S.I.; "A Study of Reinforced Concrete Compression Members Under Biaxial Bending "; Thesis presented to Purdue University, at Lafayette, Ind., in 1980. in partial fulfillment of the requirements for the degree of Doctor of Philosophy.

12. Al-Noury S.I. and Chen W.F. ; Finite Segment Method for Biaxially Loaded R.C. Columns"; ASCE Journal Of Structural Division, Vol. 108, No. ST4, April, 1982, pp. 780-799.

13. Al-Noury S.I. and Chen W.F.; "Behavior and Design of Reinforced and Composite Concrete Sections"; Journal of the Structural Division, ASCE, Vol.108, No. ST5, May, 1982 (Accepted For Publication)

14. Anand Y.N., Edward J. and Miranda C.F. ; " Computer-Aided Design : Toward an Optimal Design of Concrete

Structures"; Proceedings of the National Structural Engineering Conference, ASCE Structural Division Special Conference : Methods of Structural Analysis, University of Wisconsin, Madison, August 22-25 1976, Published by ASCE, New York, Vol.2, 1976, pp. 1060-1072.

15. Anis Farah and Huggins M.W.;"Analysis of Reinforced Concrete Columns Subjected to Longitudinal Load and Biaxial Bending" ; ACI Journal, Proceedings, 66, July, 1969, pp. 569-575.

16. Au Tung.;"Ultimate Strength Design of Rectangular Concrete Members Subject to Unsymmetrical Bending"; ACI Journal, February, 1958 , Proc. Vol. 54, pp.657.

17. Basu A.K. and Suryanarayana P. ; "Analysis of Restrained Reinforced Concrete Columns Under Biaxial Bending"; Reinforced Concrete Columns (SP-50); American Concrete Institute, Detroit, 1975, pp. 233-261.

18. Basu P.K. and Shin S.W.; " Microcomputerized Design of Reinforced Concrete Columns Under Flexture"; Structural Engineering Practice, U.S.A., Vol. 2, No.3, 1983, pp. 205-229.

19. Beeby A.W.; "The Design of Sections for Flexure and Axial Loading According to CP 110"; London, Cement and Concrete Association ,Publication 44.002, 1978,p.31.

20. Bresler B. ; " Design Criteria for Reinforced Concrete Columns Under Axial Load and Biaxial Bending"; ACI Journal, Vol. 57, 1960, pp.481-490.

21. Bresler B.; " The Design of Biaxially Loaded Columns by Ultimate Load Methods"; Magazine of Concrete Research, Vol. 12, No. 35, July 1960, pp.99-108.

22. Brettle H.J. and Warner R.F.;"Ultimate Strength Design of Rectangular Reinforced Concrete Sections in Compression and Biaxial Bending"; Civil Engineering Transactions, Institute of Engineers, Australia, April, 1968, pp. 101-110.

23. CEB-FIP; Model Code for Concrete Structures; 3rd Ed., 1978.

24. Chen W.F. and Shoraka M.T.; "Tangent Stiffness Method for Biaxial Bending of Reinforced Concrete Columns"; Publications,International Association of Bridge and Structural Engineering, Zurich, 1975, No.35-1, pp.23-44.

25. Cheng-Tzu H. and Mirza M.S. ;"Structural Concrete Biaxial Bending and Compression"; Journal of the Structural Division, ASCE, Vol.99, No.ST2, Feb.,1973, pp.285-290.

26. Chin H.C., Lee S.L. and Ng H.K.; "Inelastic Stability of Reinforced Concrete Columns"; International Journal of Structures, Singapore, Vol.6, No.1, January - March, 1986, pp. 1-16.

27. Chu. Kuang-Han and Pabracius.A.;"Biaxially Loaded Reinforced Concrete Columns"; Proceedings, ASCE, Vol. 84, St.8 December, 1978, pp.1865-1 to 1865-2

28. Considere A.; "Compressive Strength of Concrete, Steel and Hooped Concrete, Part-I"; Engineering Record, December 20, 1902, pp.581-583; Part-II, December 27, 1092, pp. 605-606.

29. Considere A.; " Concrete - Steel and Hooped Concrete " ; Reinforced concrete, 1903, pp.115.

30. BS : 8110-1985 ; Code of Practice for the Structural Use of Concrete Part-1,2,3; British Standards Institution, London, 1985, 154 pp.

31. Cranston W.B. ; "Analysis and design of reinforced concrete columns"; Research Report No.20, Cement and Concrete Association, 1972.

32. Cross H.; "The Column Analogy"; Bullettin No.215, University of Illinois, Engineering Experiment Station, 1930.

33. Cross H. and Morgan N.D.; Continuous Frames of Reinforced Concrete; John Wiley & Sons, Inc., 1932.

34. CRSI Handbook (Second Edition); Concrete Reinforcing Steel Institute, Chicago, 1975.

35. Czerniak E.; "Analytical Approach to Biaxial Eccentricity"; Journal of Structural Division, ASCE, August,1962.

36. Davister M.D.; "Computer Program for Exact Analysis"; Concrete International, Vol.8, No.7, July, 1986, pp. 56-61.

37. Davister M.D.; Analysis of Reinforced Concrete Columns using Computers"; Review IMCYC, Vol.21, No.186, November, 1986, pp. 35-17.

38. Debayt P. and Sethurathnam A.; " Optimum Criterion for Eccentrically Loaded R.C. Columns"; Building Science, Vol.6, No.2, September, 1971, pp. 85-88.

39. Ding D., Jiang Y., Jin X., Lan Z. and Wei L.; "Improvement and Simplification of Formulas for Calculating Stress of Tensile Steel in Reinforced Concrete Compressive Members under Eccentric Service Load"; Jian Zhu Jie Gou Xue Bao, Beijing, China, Vol.6, No.3, 1985, pp. 17-26.

40. Dinsmore C.I.; " Column Analysis with a Programmable Calculator"; Concrete Institute, U.S.A., Vol.4, No.11, November, 1982, pp. 32-36.

41. Drysdale R.G. and Huggins M.W.; " Sustained Biaxial Load on Slender Columns"; ASCE Journal of Structural Division, Vol.97, No. ST5, Paper 8103, May, 1971, pp. 1423-1443.

42. Farah A. and Huggins M.W.;" Analysis of Reinforced Concrete Columns Subjected to Longitudinal Load and Biaxial Bending "; American Concrete Institute Journal, Proceedings, Vol.66, No.7, July, 1969, pp. 569-575.

43. Fickel H.H. ; "Concrete Column Design by AASHO Specifications" ; ASCE Journal of Structural Division, Vol.97, No.ST4, Paper 8070, April, 1971, pp. 1187-1201.

44. Fintel Mark; Handbook of Concrete Engineering; Von Nostrand Reinhold Company, New York, 1974.

45. Fleming J.F. and Werner S.D.;"Design of Columns Subjected to Biaxial Bending"; ACI Journal, Proceedings, 62, March, 1965, pp. 327-342, Disc., pp.1217-1223

6. Furlong R.W. ; "Ultimate Strength of Square Columns Under Biaxially Eccentric Loads" ; ACI Journal, Vol. 58, No.9, March, 1961, p.1129.

47. Furlong R.W. and Ferguson P.M.;"Tests on Frames with Columns in Single Curvature"; Symposium on Reinforced Concrete Columns, SP-13, American Concrete Institute, Detroit, 1966, pp. 517-536.

48. Furlong R.W.; "Concrete Columns Under Biaxially Eccentric Thrust"; ACI Journal, Vol.76, No.10, October, 1979, pp. 1093-1118.

49. Ghanekar V.K. and Jain J.P.; Handbook of Limit State Design of Reinforced Concrete ; Tata McGraw Hill Publishing Co.Ltd, New Delhi, 1981.

50. Gouwens A.J.; " Biaxial Bending Simplified in Reinforced Concrete Columns"; ACI Publication, S.P.50,1975.

51. Grant L.H., Mirza S.A. and Mac Gregor .G.; " Monte Carlo Study of Strength of Concrete Columns"; ACI Journal, Detroit, Vol.75, No.8, August, 1978, pp. 348-358.

52. Grasser E. and Linse D.; " Design Tables for Reinforced Concrete Sections Under the new DIN- 1045 Code "; Werner-Verlag, Dusseldorf, 215 pp.

53. Guralnick S.A and Desai S.C.; "Ultimate Strength of Eccentrically Loaded Reinforced Concrete Columns"; Indian Concrete Journal, Vol.44, No.7, July, 1970, pp. 289-296

54. Gurfinkel G. and Robinson A.; " Determination of Strain Distribution and Curvature in a Reinforced Concrete Section Subjected to Bending Moment and Longitudinal Load "; ACI Journal, Proceedings, 64, July, 1967, pp. 398-403.

55. Heiman J.L., Bakoss S.L., Burfitt A.J. and Cridland L.; "Measured and Predicted Axial Strains and Deformations in a Column of a Tall Reinforced Concrete Building"; Institution of Engineers, Australia, Civil Engineering Transactions, Vol.CE22, No.3, November,1980, pp.193-201.

56. Heimdahl P.D. and Bianchini A.C.; " Ultimate Strength of Biaxially Eccentrically Loaded Concrete Columns Reinforced with High Strength Steel "; Reinforced Concrete Columns (Sp-50),American Concrete Institute, Detroit, 1975, pp. 93-117.

57. Henry R.M.; "Column Sizing Design Aid"; Computer Structure, U.S.A., Vol.17, No.2, 1983, pp. 237-241.

58. Hognestad E.; "A Study of Combined Bending and Axial Load in Reinforced Concrete Members"; University of Illinois Engineering Experiment Station, Bulletin No.399.1951.

59. Hsu C.T.T.; "Biaxially Loaded L-Shaped Reinforced Concrete Columns"; Journal of Structural Engineering, London, Vol.111, No.12, December, 1985, pp. 2576-2595.

60. Hsu C.T.T.; "Analysis and Design of Square and Rectangular Columns by Equations of Failure Surface"; ACI Structural Journal, Vol.85, No.2, March - April, 1988, pp. 167-179.

61. IS: 456-1978; Code of Practice for Plain and Reinforced Concrete ; Indian Standards Institution, Third Revision, Fourth Reprint, August, 1983.

62. Johnston B.C. (Ed.); The Column Research Council Guide to Design Criteria for Metal Compression Members (second edition); Jhon Wiley & Sons, New York, 1966, 217 pp.

63. Karve S.R.;Handbook of Reinforced Concrete Design to IS:456-1978; Pune Vidyarthi Griha Prakashan, Pune.

64. Kayal S.; "Finite Element Method for Uniaxially Loaded R.C. Columns"; Journal of Structural Engineering, London, Vol.110, No.5, May, 1984, pp. 1114-1133.

65. Kiedron K.; "Critical Load of Compressed Reinforced Concrete Columns" ; Arch Inz Ladowej, Poland, Vol.39, No.3, 1983, pp. 221-231.

66. Kordina K., Rafla K. and Hjorth O.; "Ultimate Load of Reinforced Concrete Columns Under Biaxial Bending"; Dtsch Ausschuss Stahlbeton, No.265, 1976, 74 p.

67. Kwan K.H. and Liauw T.C.; "Computer Aided Design of Reinforced Concrete Members Subjected to Axial Compression and Biaxial Bending";Structural Engineer Part B,Hong Kong, Vol.63B, No.2, June,1985, pp.34-40

68. Leung C.K. and Simmonds S.H.; "Reinforced Concrete Column Design Program (COLUMN 1)"; Structural Engineering Report No.115, Canada, April, 1981, 160 p.

69. Liauw T.C. and Kwan K.H.; "Computerized Design of Reinforced Concrete Columns by Load Factor Method"; Hong Kong Engineer, Vol.16, No.2, February, 1988, pp. 23-30.

70. Liu X.L. and Chen W.F.; "Behaviour and Design of Reinforced Concrete Pipe Columns"; Purdue University, Indiana, U.S.A.,Civil Engg. Structural Engg. Technical Report CE-STR, No.82-28, 1982, 55 p.

71. Liu X.L. and Chen W.F.; "Nonlinear Analysis of Reinforced Centrifugal Concrete Pipe Columns";Purdue University Indiana,Civil Engg. Structural Engg.Technical Report CE-STR, No.82-27, 1982, 65 p.

72. Liu X.L. and Chen W.F.; "Reinforced Concrete Pipe Columns : Behaviour and Design"; Journal of Structural Engineering London, Vol.110, No.6, June, 1981, pp. 1356-1373.

73. Mac. Gregor J.G., Breen J.E. and Pfrang E.O.; " Design of Slender Concrete Columns "; ACI Journal,Proceedings, 67, January, 1970, pp. 6-28.

74. Mac Gregor J.G.; "Simple Design Procedures"; Theme II, Introductory Report, 1974,Quebec Symposium on Design and Safty of Reinforced Concrete Compression Members, IABSE, Zurich, 1974.

75. Magalhaes M.P.D.; "Biaxially Loaded Concrete Sections"; Journal of the Structural Division, ASCE, Vol.105, No. ST12, December, 1979.

76. Mander J.B., Priestley M.J.N. and Park R.; "Behaviour of Ductile Hollow Reinforced Concrete Columns" ; Bullettin of New Zealand National Society of Earthquake Engineering, Vol.16, No.4, December,1983, pp. 273-290.

77. Manning G.P.; Reinforced Concrete Design; Longmans Green and Co., London, 1958.

78. Marin J.; "Analysis and Revision of Arbitrary - shaped RC Short Columns Subjected to Skew Bending and Axial Load (Programme REVCOL)"; Publication No.PICEO21, Centre of Data Processing, Faculty of Engineering, Central University of Venezuela, Caracas, 1970. 26 pp.

79. Marin J.; "Numerical Computation of Plane Figures and Concrete Compressed Zones"; Bullettin IMME No.41, Institute of Meterials and Structural Models, University of Central Venezuela, Caracas, January - March, 1973, pp.29-41.

80. Marin J.; "A Research Report on Short Columns"; 1974 ACI Annual Convention, ACI-ASCE Committee 441, San Francisco April, 1974, 13 pp.

81. Marin J.; "Strength of RC Sections Subjected to Axial Load and Bending : A General Algorithmic Method and its Column Design Applications"; Thesis presented to the

University of Central Venezuela, at Caracas, in partial fulfillment of the requirements for the degree of Doctor in Sciences, July, 1974, 150 pp.

82. Marin J.; " Strength and Ductility of Cee (C) Shaped Structural Walls "; Bullettin No.17, Institute of Materials and Structural Models, University of Central Venezuela, Caracas, July - September, 1974, pp.3-22.

83. Marin J.; "Strength of L-Shaped RC Short Columns."; Bullettin No.51, Institute of Materials and Structural Models, University of Central Venezuela, Caracas, July - September, 1975, pp.3-31 ; Estructuturas, Tomo XI, 2a.Serie, No. 5-6, Institute Jorge Juan, Consejo Superior de Investigaciones Cientificas, Madrid, 1977, pp. 37-56.

84. Marin J.; "Charts, Formulae and Criteria for Computing Columns in RC Buildings"; Bullettin IMME No. 61, Institute of Materials and Structural Models, University of Central Venezuela, Caracas, January - June, 1978, pp. 45-102.

85. Marin J. ; "Design Aids for L-shaped Reinforced Concrete Columns"; ACI Journal, Vol.76, No.11, November, 1979, pp. 1197-1216.

86. Mattock A.H. and Kriz L.B. ; "Ultimate Strength of Non-Rectangular Structural Concrete Members"; ACI Journal, Vol.57, No.7, January, 1961, 737. pp.

87. Mattock A.H. and Kriz L.B.; "Rectangular Concrete Stress Distribution in Ultimate Strength Design"; ACI Journal, February, 1961, Proc., Vol.57, pp. 857-928.

88. Meek J.L.; "Ultimate Strength of Columns with Biaxially Eccentric Loads"; ACI Journal, Proceedings, Vol.60, No.8, August, 1963, pp.1053-1064.

89. Moran F.; "Design of Reinforced Concrete Sections Under Normal Loads and Stresses in the Ultimate Limit State"; Bulletin d'Information No.83, Comite Europeen du Beton, Paris; April 1972, p.131.

90. Morgan V.A.; "Rectangular Columns Subjected to Multi-Directional Bending"; Concrete and Constructional Engineering, August, 1962.

91. Muller L.S.; "Eccentrically Loaded Corner Columns"; ACI Journal, Vol.22, No.7, March, 1951, Proceedings, 55, pp. 273 - 281.

92. Muller L.S. ; " Design of L-shaped Columns with Small Eccentricities"; ACI Journal, Title No.56-31, December 1959, pp. 178-498.

93. Nakai H., Kitada I. and Miki T.; "Interaction Curve of Thin-Walled Box Stub Column Subjected to Compression and Bending for Applying to Overall Buckling Analysis of Columns"; Doboku Gakkai Rombun Hokokushu, Japan, No.362/I.4, October, 1985, pp. 65-73.

94. Nakai H., Kitada I. and Miki T.; " Experimental Study on Ultimate Strength of Thin - Walled Box Stub Columns

Subjected to Compression and Bending"; Doboku Gakka Rombun Hokokushu, Japan, No.362/I-4, October, 1985, pp. 87-97.

95. Pagay S.N., Fergusson P.M and Breen J.E ; "Importance of Beam Properties on Concrete Column Behaviour"; ACI Journal Vol. 67, No. 10, October, 1970, p. 808.

96. Pannel F.N.; Failure Surfaces for Members in Compression and Biaxial Bending"; ACI Journal, Jan.1963, Vol. 60, pp. 129-140.

97. Pannel F.N.; " Design of Biaxially Loaded Columns by the Ultimate Load Method" ; Concrete and Constructional Engineering, October - November - December, 1960.

98. Park R. and Paulay T.; Reinforced Concrete Structures; Wiley-Interscience Publication, Jhon Wiley and sons, New York, 1975.

99. Parme A.L. ; Nieves J.M. and Gouwens A. ; " Capacity of Rectangular Columns Subject to Biaxial Bending" ; ACI journal, Vol.63, 1966, pp.911-923.

100. P.C.A.; " Ultimate Load Tables for Circular Columns " ; Portland Cement Association, 1960.

101. Pfrang E.O., Siess C.P. and Sozen M.A.; "Load - Moment Curvature Characteristics of Reinforced Concrete Cross-Sections"; ACI Journal Proceedings, 61, July, 1964, pp. 763-768, Disc. pp. 1673-1683.

102. Popov E.P.; Introduction to the Mechanics of Solids; Prentice Hall, Englewood Cliffs, N.J., 1968, 571 pp.

103. Procter A.N.; " Hollow Concrete Columns"; Civil Engineering, London, September, 1976, pp. 53-55.

104. Procter A.N.; "Hollow Rectangular Reinforced Concrete Columns";Civil Engineering, London, September, 1977, pp. 45,47,49.

105. Purushothaman P.; Reinforced Concrete Structural Elements- Behaviour, Analysis and Design; Tata McGraw Hill Publishing Company Ltd., New Delhi and Torsteel Research Foundation in India, Bangalore, pp.221-359.

106. Rajasekaran S.; "Critical Review of the Design of Reinforced Concrete Columns According to IS:456 - 1978:Part I - Short Columns"; Indian Concrete Journal, November, 1981, pp. 297-303.

107. Ramamurthy L.N. ; "Investigation of Ultimate Strength of Square and Rectangular Columns Under Biaxial Eccentric Loads"; Symposium on Reinforced Concrete Columns, ACI Publication, SP:13,1966.

108. Ramamurthy L.N. and Mullick S.K.; "Ultimate Strength of Reinforced Concrete Columns Under Axial Load and Biaxial Bending"; Indian Concrete Journal, Vol.44, No.10, October, 1970, pp. 449-455.

109. Ramamurthy L.N. and Hafeez Khan T.A.;"L-Shaped Column Design for Biaxial Eccentricity"; Journal of Structural Engineering, London, Vol.109, No.8, August, 1983, pp. 1903-1917.

110. Regan P.E. and Yu C.W.; Limit State Design of Structural Concrete; Chatto and Windus, London, 1973.

111. Reynolds C.E. and Steedman J.C. ; Reinforced Concrete Desingner's Handbook; 9th Ed.,Rupa and Co.,Calcutta, 1981.

112. Richart F.E. and Staehle G.C.; "Column Tests at University of Illinois" ; ACI Journal, February - March, 1931 Vol.27, pp.731-761, January,1932,Vol.28, pp.167-279.

113. Richart F.E.and Brown R.L. ; "An Investigation of Reinforced Concrete Columns";University of Illinois Engineering Experiment Station, Bulletin No.267, 1934.

114. Richart F.E., Draffin J.O., Olson T.A and R.H.Heitmen ; "The Effect of Eccentric Loading, Protective Shells, Slenderness Ratios,and Other Variables in Reinforced Concrete Columns";University of Illinois Engineering Experiment Station, Bulletin No. 368, 1947.

115. Richart F.E., Chairman ACI Committee 105; " Reinforced Concrete Column Investigation, Tentative Final Report"; ACI Journal, February,1933, Proc.29, p.275.

116. Rondal J. and Maquoi R.; "Stub - Column Strength of Thin-Walled Square and Rectangular Hollow Sections";Thin-Walled Structures, Belgium, Vol.3, No.1, 1985, pp. 15-34.

117. Ross D.A. and Yen J.Y.R.; "Computer Aided Design of Reinforced Concrete Columns"; Concrete Institute, U.S.A., Vol.6, No.3, March, 1984, pp.47-54.

118. Ross D.A. and Yen J.Y.R. ; "Interactive Design of Reinforced Concrete Columns with Biaxial Bending"; ACI Journal,

Detroit, Vol.83, No.6, November - December, 1986, pp. 988-993.

119. Row D.G. and Paulay T.; "Biaxial Flexure and Axial Load Interaction in Short Rectangular Reinforced Concrete Columns"; Bulletin of the New Zealand Society for Earthquake Engineering, Vol.6, No.3, September,1973, pp. 110-121.

120. Rutenberg A.; "Short R.C. Columns : Effect of Nominal Eccentricity"; Handasa Ve-Adrikhalut, Israel,Vol.45, No.6, August, 1985, pp. 33-34.

121. Sacks R. and Buyukozturk O.; "Expert Interactive Design of R/C Columns Under Biaxial Bending" ; Journal of Computers and Civil Engineering, U.S.A., Vol.1,No.2, April, 1987, pp. 69-81.

122. Salmons J.R. and McLaughlin D.G.; "Design Charts for Proportioning Rectangular Prestressed Concrete Columns"; Journal of Prestressed Concrete Institute, Vol.27, No.1, January - February, 1982, pp. 120-143.

123. Scholz H. ; "Proposed Design Provisions for Reinforced Concrete Columns"; Civil Engineer South Africa, Johannesburg, Vol.30, No.5, May, 1988, pp. 229-233.

124. Shanmughasundaram N. ;" Biaxial Interaction Exponent for Concrete Columns"; ASCE Journal of Structural Division,Vol.103, No.12, Decemeber,1977, pp.2295-2306.

125. Shen J., Lui Z. and Wen Y.; "Experimental Investigation of the Seismic Resistance Behaviour of Reinforced

Concrete Hollow Core Columns"; Jian Zhu Jie Gou Xue Bao, Beijing, China, Vol.3,No.5, 1982, pp.21-31.

126. Sinha S.N. and Das R.N.; "Design Aid for Rectangular Section under Axial Load and Flexure based on Working Stress Method"; Journal of structural Engineering, Vol.13, No. 4, January, 1987.

127. Sinha S.N. and Sinha A.K.; "Design Aids for Cross (+) Shaped Column Section"; Journal of Indian National Group of IABSE, Vol. 11, No. 1, March, 1987.

128. Sinha S.N. and Sinha A.K.; "Interaction Curves for Tee (T) Shaped Column Section" ; Journal of Indian National Group IABSE, Vol. 19, No. 2, June, 1989.

129. Sinha S.N., Singh V.S. and Kumar N.; "Computer Aided Design of Column Section";International Conference on Software ICENSOFT '89, I.I.T. Delhi, December, 1989.

130. Sinha S.N.; Design Handbook for Reinforced Concrete Structures; Tata McGraw Publishing Company Ltd; New Delhi, pp.600, Drawings/Charts 450 (Under Print).

131. Skladnev N.N. and Krivov O.L.; "Study of Behaviour of Reinforced Concrete Columns"; Beton Zhelezobeton, Russia, No.4, April, 1984, pp. 31-33.

132. Slater W.A. and Lyse; "Column Tests at Lehigh University"; ACI Journal, February-March, 1931, Vol.27, pp.677-791.

133. Smith I.A.; "Rectangular Columns to CP : 110"; Concrete, London, Vol.10, No.7, July, 1976, pp. 29-31,34.

134. Smith K.N. and Nelles W.H.; "Columns Subjected to Biaxial Bending - Preliminary Selection of Reinforcing ";ACI Journal, Proceedings, 71, August, 1974, pp. 411-413.

135. SP: 16-1980 ; Design Aids for Reinforced Concrete to IS:456-1978; Indian Standards Institution, First Reprint, February, 1982.

136. Somayaji S. and Ramakrishnan V.;"Simplified Method of Design of Reinforced Concrete Columns Using Equilibrium Diagrams"; Journal of Civil Engineering Design, Pittsburgh, Vol.2, No.4, 1980, pp. 361-377.

137. Starrock R.D.; "Computer Analysis of Reinforced Concrete Sections Under Biaxial Bending"; Structural Engineering Group, Institution of Civil Engineers, London, Part-I,Publication No.TN 135, December,1985.

138. Sahlquist H.; "Determination of Load - Deflection Curves of Columns made of Perfectly Elastoplastic Material and subjected to Eccentric Compression. Application to Reinforced Concrete Columns"; NOVO Betong, Sweden, Vol.14, No.3, 1970, pp. 175-193.

139. Tadros M.K.;"Design Charts for Reinforced Concrete L-Sections";Canadian Journal of Civil Engineering Vol.3:4 December, 1976, pp. 479-483.

140. Talbot A.N.; "Tests of Concrete and Reinforced Concrete Columns"; Bullettin No.10, 1906, and No.20, 1907, University of Illinois, Urbana.

141. Taylor M.A. and Ho S.W.; "Design Contour Charts for Biaxial Bending of Rectangular Reinforced Concrete Columns Using Bresler's Method"; Structural Engineering Practice, U.S.A., Vol.2, No.4, 1983 - 1984, pp.301-317.

142. Taylor M.A.; "Direct Biaxial Design of Columns"; Journal of Structural Engineering, London, Vol.111, No.1, January, 1985, pp. 158-173.

143. Vaidyanathan R.; "Study of Biaxially Loaded Reinforced Concrete Columns"; M.Sc. Thesis of the University of Madras, September, 1963.

144. VanLuchene R.D. and Bozeman M.T.; "Interactive Concrete Column Design"; Journal of Computers and Civil Engineering, U.S.A, Vol.2, No.3, July, 1988, PP.274-288.

145. Virdi K.S.; "New Technique of Moment - Thrust - Curvature Calculations for Columns in Biaxial Bending"; Australas Conference on Mechanics of Structures and Materials, 6th, University of Canterbury, Christchurch, New Zealand, August 22 - 24, 1977, Jointly Sponsored by the Univ. of Canterbury and New Zealand Institute of Engineers, pp. 307-313.

146. Virdi K.S.; "Design of Circular and Rectangular Hollow Section Columns"; Journal of Construction Steel Res, Vol.1, No.4, September, 1981, pp. 35-41.

147. Wang C.K. and Solomon G ; Reinforced Concrete Design ; 3rd Ed., Harper International Ed., New York, 1979.

148. Weber D.C.; "Ultimate Strength Design Charts for Columns with Biaxial Bending"; ACI Journal, Vol.63, No. 11, November, 1966, pp. 1205-1230.

149. Wiesinger F.P.; "Design of Symmetrical Columns with Small Eccentricities in One or Two Directions"; ACI Journal, Vol.30, No.2, August, 1958, Proceedings,55, pp. 273-281

150. Winter G. and Nilson A.H ; Design of Concrete Structures ; McGraw-Hill Kogakusha, Tokyo,1979.

151. Whitney C.S. and Cohen E.; "Guide for Ultimate Strength Design of Reinforced Concrete " ; ACI Journal, Proceedings, 53, November, 1956, pp. 455-490.

152. Withey M.O. ; "Tests of Plain and Reinforced Concrete Columns" ; Engineering Record, July, 1909, 41 pp.

153. Withey M.O.;"Tests on Reinforced Concrete Columns";Bullettin No. 300, 1910, and No. 466, 1911, University of Wisconsin.

154. Young C.J.; "Direct Selection of Concrete Dimensions in Columns"; Concrete International, Vol.3, No.10, October, 1981, pp. 27-31.

155. Zhang X.B.; "Eccentric Compression of Reinforced Concrete Square Pipe Columns";Sichuan Building Research, No.4, Sichuan, China, 1979.