THE EXTRUSION OF METALS

By

CLAUDE E. PEARSON
M.MET. (SHEFFIELD)
Head of the Metallurgy Department,
King's College, University of Durham

WITH A FOREWORD
BY

R. GENDERS
M.B.E., D.MET.
Superintendent, Technical Applications Metals,
Ministry of Supply

LONDON
CHAPMAN & HALL LTD.
11 HENRIETTA STREET W.C.2
1944

First published . . . 1944

BOOK
PRODUCTION
WAR ECONOMY
STANDARD

THIS BOOK IS PRODUCED
IN COMPLETE CONFORMITY
WITH THE AUTHORIZED
ECONOMY STANDARDS

Printed in Great Britain by Butler & Tanner Ltd., Frome and London
Bound by G. J. Kitcat Ltd., London Flexiback Binding Patent No. 441294

FOREWORD

THE process of extrusion has achieved within a short period a major revolution in methods of metal working, and its advantages are now felt in the economy of production of non-ferrous metals and alloys in many forms. There has been for some time a need for authentic information on the subject, but it is only during the last twenty-five years that investigations have been made to gain the information necessary to link up the engineering and metallurgical aspects. The present book is, therefore, not premature, yet it could hardly have been written with adequate effect any earlier. Those who have worked on the subject will be foremost in acknowledging the high credit due to Mr. Pearson for completing the achievements of his own work by this full treatise.

Until the World War of 1914–18, the process was considered simple in principle and somewhat limited in scope, and the details of works practice were little known even by the designers of the essential hydraulic machinery. The use of extruded brass bar for ammunition components, however, brought the product under metallurgical investigation at Woolwich, mainly by reason of occasional so-called " piping " defects of peculiar form, the elimination of which was important in certain connections. The resulting elucidation of the character of the plastic flow in extrusion opened up a field of work of considerable scope and interest, and experiments with plasticine and wax provided matter for lively discussion at the meetings of metallurgical societies. The behaviour of wax under extrusion conditions could not, however, be readily translated into high temperature practice with metals, and the Woolwich investigators considered it necessary to make small-scale experiments with brass, especially in connection with the exploration of possible methods of modifying the mode of flow during extrusion. An apparatus was improvised which could be built up in various ways under a vertical press. During the experiments all parts had to be at a dull red heat and were prone to collapse in unexpected ways under the high loads necessary, so that the work was not without adventure, but eventually the evidence needed was secured. Interest was thus awakened in the new-old process of " inverted " extrusion which gives the advantages of a relatively low working pressure and complete avoidance of internal extrusion defects in the product. At the present time, a number of industrial presses are working on high-melting-point alloys by this process, which is, however, limited to speciality work, since in exchange for its metallurgical benefits, it involves mechanical difficulties, and these, although easily overcome on a small vertical press, are not consistent with high-speed production in the horizontal extrusion of many materials.

Since the early days of metallurgical interest in extruded products, great strides have also been made in the development of the usual " direct " hot extrusion process, and this again has been aided to no mean extent by advances in the metallurgy of steels used for dies and containers. It is worth emphasizing that the extrusion process has provided the only available solution of problems affecting the production of certain hot worked alloys. New applications have been constantly appearing, and in the opinion of some, the mass production of steel tubes and sections by extrusion is only a matter of time. The recent application to steel shell forgings is of interest in this connection.

As regards cold extrusion of the softer metals there is little doubt that a wider understanding of the principles involved will, in various directions, lead with advantage to their application in combination with other methods of cold working.

The notable investigatory work which has been carried out by the author of this book has done much to clarify the subject. With this evidence and the careful review of other available data which he has presented, he has done a considerable service to all engaged in the production and use of the large range of commercially extrudable products. There is no doubt that the appearance of the first up-to-date reference book on the subject will be greeted with wide interest and will provide an impetus to further developments.

Above all, a book should be readable; and with this quality added to the care which the author has obviously taken in his choice of material and method of presentation, the work should be universally welcomed.

R. GENDERS.

APPLICATIONS METALS.

Ministry of Supply,
Shell Mex House,
London, W.C.2.

AUTHOR'S PREFACE

THE process of extrusion has undergone such vigorous development in the course of the last thirty years that it is now entitled to rank among the foremost of the technical methods by which metals are wrought into shape. Among industrial alloys there are few indeed to whose working it is not applied to some extent; and for many it possesses unique importance. Add to this that it would be difficult to overstate the contribution which extruded products of all kinds have made during the war towards meeting the insistent demands of the supply services, and it is clear that, whatever may be the shortcomings of the present book, no apology need be offered for writing it.

It is quite evident from the existence of an extensive literature that a lively interest is taken in extrusion problems. Unfortunately, the data relating to it are widely dispersed, and since, in addition, practice in extrusion has tended to diverge in meeting the special requirements of different materials, it has become a matter of difficulty to obtain a comprehensive view of its various branches. The author has endeavoured in this volume to collate the scattered information existing on the subject and to present from it a concise account of extrusion practice relating to different classes of work and materials. The historical development of the process has been shortly indicated, since it appears not to have been dealt with previously. An attempt has been made to avoid offering a mere description of plant and procedure by introducing theoretical aspects where possible. With this object, chapters have been included to deal with flow phenomena in the process; and with factors, such as temperature, the speed and extent of deformation, etc., in their influence on the extrusion of metals. In regard to this, the author has drawn, besides his own experiments, upon the important investigations carried out in Germany. The subject of impact extrusion tends to fall into a class by itself, and has received separate treatment. Some space has also been given to those specialized methods of extrusion which form a connecting-link between it and forging.

In the compilation of data for the book the author owes much to individuals and firms, too numerous for separate mention, who have been generous in providing advice and facilities for observation, and to them he extends his grateful thanks. He is indebted also to the Leverhulme Research Fellowship Committee, with whose support he was enabled to travel in Germany and the U.S.A. for purposes of studying extrusion technique. Specific acknowledgment has been made in the text so far as possible to the many companies which have kindly supplied drawings and photographs, and to the professional and technical journals which have sanctioned the use of their illustrations. The opportunity is taken here to refer to the courtesy of the Controller of H.M. Stationery Office in permitting the inclusion of Figs. 22, 55, 57, 58, 59, 71, 140, 142, taken, respectively, from British Patents Nos. 457,445; 335,124; 308,569; 408,187; 533,468; 533,082; 469,550; 459,742; also to that of the Editor of *Engineering* in sanctioning the use and lending blocks for the diagrams in Chapter I, which derive from a paper by the author to the Newcomen Society. Figs. 84–87, 96, 99–102, 104, 111, 120, 122, 128 are reproduced from the *Journal of The Institute of Metals* with the kind agreement of the Secretary, Mr. G. Shaw-Scott, M.Sc.

The author is especially indebted to Mr. Kenneth Gray and Mr. O. Kennedy for criticizing sections of the work; also to Mr. R. Hiscock, Lecturer in Engineering, and Mr. H. Walker, Photographer to the Library, both of King's College, Newcastle-upon-Tyne, for valuable assistance in connection with the illustrations. Finally, he wishes to record his sincere appreciation of the painstaking work of his friend, Mr. J. E. Newson, M.Met., in criticizing the subject matter and in the revision of the proofs.

In conclusion, this opportunity is taken to thank Dr. R. Genders, Superintendent, Technical Applications Metals, in the Ministry of Supply, whose authority on the subject of extrusion is well known, for kindly contributing the foreword to this book.

C. E. P.

King's College,
Newcastle-upon-Tyne.

CONTENTS

INTRODUCTION

EXTRUSION is a comparative new-comer among the industrial methods by which metals are wrought into useful forms, but it has succeeded in establishing itself firmly as one of the foremost of these. Essentially the process is one by which a block of solid metal is converted into a continuous length of uniform cross-section by forcing it to flow, under high pressure, through a die orifice which is so shaped as to impart the required form to the product.* In the main it is a hot working operation, the metal being heated to give it a suitable degree of softness and plasticity; but it can also, in some instances, be carried out in the cold. In the method chiefly adopted, cast billets of cylindrical shape, placed within a strong walled enclosure, are caused to extrude through the die under the powerful pressure exerted by a ram, actuated hydraulically or mechanically.

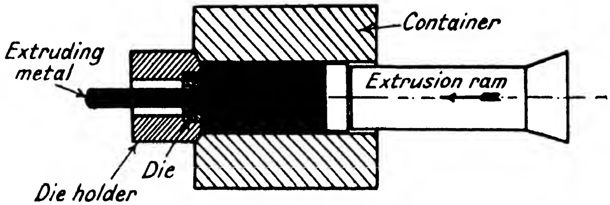

(a) Direct Extrusion

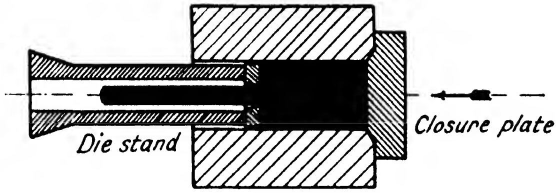

(b) Inverted Method of Extrusion

FIG. 1.

The sketches in Fig. 1 serve to illustrate the essential principle of the process, and, at the same time, enable the distinction between two methods of working, known as direct and inverted extrusion,

---

* "To extrude" means literally to thrust or force out (L. *ex* + *trudere*). The New English Dictionary gives as one definition of "extrusion"—the act of expulsion by mechanical force.

to be made clear. These depend on the arrangement of the tools. The characteristic of the first is that the die is located at one end of the container and the metal to be extruded is driven towards it, thus moving relatively to the container, by the ram entering from the opposite end. In the case of inverted extrusion, the die is placed on the end of the ram, which is bored out to allow the passage of the extruded bar, and moves through the container from one end, the opposite end being closed. In neither of these methods is it essential for the ram to be the moving member: it can have a fixed position and the container be made to move over it. It is, in fact, generally more convenient, in using the inverted process for the container to be made to travel under the power stroke, and for the die to be attached to a stationary ram, or as it now becomes, a die stand which is attached to the head of the press frame.

To begin with, extrusion was of limited applicability, being confined almost solely to the working of lead. Its attractiveness, from a commercial point of view, for the manufacture of lead pipes caused inventive ability to be specially focussed in that direction, with the result that the history of extrusion for the first seventy or eighty years is mainly a chronicle of the development of pipe-making presses. In due course fresh stimulus was given, with the rise of the electrical industry, to the production of machines suitable for applying protective lead sheathing to power cables. The inventions of Alexander Dick, made almost a century after the inception of extrusion, laid the foundation for immense progress by rendering it applicable to some of the harder metals. The economic advantages of this " hot extrusion " process, so called to distinguish it from the earlier methods used for lead, which were, however, hot working processes in a metallurgical sense, could not be fully realized at first. It was restricted to a small range of alloys, in which, even so, relatively few sections of fairly simple shape could be made. Scrap losses were high, and the product, especially so far as tubes were concerned, was of low accuracy. These drawbacks have gradually been overcome and the major problems in regard to the method can now be regarded as solved. Its principal claims lie in giving in a rapid and economical manner a product in the wrought condition, with good mechanical properties, and of high dimensional accuracy upon which finishing and machining operations are reduced to a minimum or may, in some cases, be dispensed with. In the field of semi-finished products it serves as a source of raw material which is well adapted for mass-production methods. Besides plain round, square, hexagon bars, and strips and tubes, an extraordinary diversity of special sections, including many with re-entrant angles, and of complex hollow form, can be made in a wide range of alloys. Indeed it may be said that, so far as the more readily extrudable materials are concerned, almost any product which is required in straight lengths of uniform section comes within the compass of the method. The improved surface finish, the possibility of producing on a single machine a much greater range of sections, and the ease with which the change over from one to another of these can be made by merely replacing the die, are advantages which have caused the extrusion press to supplant the rolling mill for many purposes connected with non-ferrous metals.

The remarkable developments which have taken place in extrusion technique and equipment in connection with light alloys have aided the great expansion in the use of these materials in the aircraft and transport industries, and have helped to bring about in them the supercession of the use of steel tubes, and rolled or drawn sections. An additional merit of extrusion is that it affords an invaluable means of working certain alloys which, in the cast state, are too tender to be satisfactorily rolled or forged.

The war has stretched extrusion resources to the utmost, and has served to bring about added recognition of the great possibilities of the process, which will undoubtedly be carried over into the post-war period. In spite of the achievements already made, extrusion can still be regarded as being very much in the dynamic stage and there are indications that further advances are taking shape. New ground has already been broken in the last few years by extending extrusion to steel and other alloys of high melting-point. Some significant progress has also been made recently in connection with the extrusion of steel tubes in large mechanically driven presses. There are signs that extrusion may have some scope in connection with "powder metallurgy". Cold extrusion by impact methods, originally used chiefly in the production of collapsible tubes, has proved to be adaptable to other products and to new materials, with results that have made themselves felt to a growing extent in several of the light industries.

On the whole, the advances made in extrusion have resulted largely from progress in engineering design and improved materials of construction, combined with the gradual acquisition of technical experience, most of it of an empirical character.

From the metallurgical as opposed to the engineering standpoint possibly the main contributions have been made outside the extrusion process itself, consisting in the development of new alloys for use in the process; in improved tool steels; in the provision of sounder and more homogeneous billets, etc. At the same time, persistent endeavours to solve the complicated problems of flow in the billets during working from which it can be hoped to trace the genesis of defects which affect the quality of extruded materials, have had important results. Perhaps more might have been achieved if there had been available more quantitative knowledge regarding the behaviour of metals under heavy deforming forces at high temperatures. Actually the extrusion press is a not unsuitable instrument for getting to grips with some of the fundamental problems of hot working, although the conditions of technical extrusion practice do not provide the best opportunity. In some countries steps have already been taken in the last few years to further the study of extrusion questions, particularly in connection with the development of new aluminium and magnesium alloys, by putting down suitable research plant for work on a semi-technical scale.

CHAPTER I

HISTORICAL SURVEY

The Origin of Extrusion. It is probable that the earliest perception of the principles of extrusion was due to Joseph Bramah, the famous hydraulic engineer, who, in a patent granted in 1797, described a press, shown in Fig. 2, " For making pipes of lead or other soft metals of all dimensions and of any given length without joints ". Lead, maintained molten in an iron pot (*a*), by a fire beneath, was forced by a pump (*b*) into a long projecting tube (*c*), which served as a die. A tapered mandrel (*d*) was supported concentrically with the tube by means of a bridge in its enlarged end. The lead passing through the annular space between the tube and mandrel was kept molten by the fuel gases inside the outer casing until it approached the outlet, where it was chilled to cause it to solidify so that it emerged in the form of a pipe. Though it is doubtful whether this apparatus, which, it may be remarked, was devised to make pipes for the distribution of beer and similar liquors, ever operated satisfactorily, it claims attention in providing the first record of a machine which embodies a con-

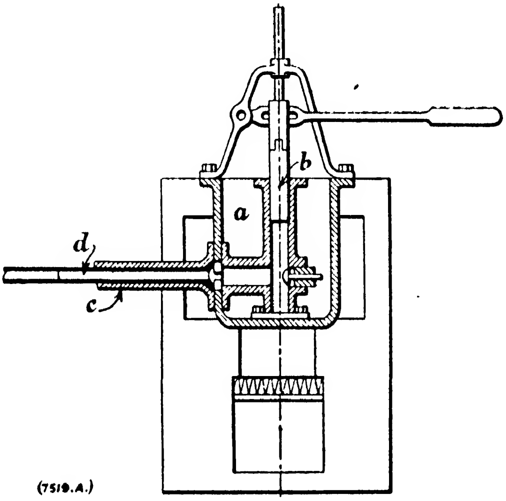

FIG. 2.—Bramah's lead-pipe machine.

ception of the idea of extrusion, while it contains, too, the germ, of the idea of die-casting.

There was no immediate development of Bramah's idea, and the earlier methods of making lead pipes by casting a hollow cylindrical billet, and either drawing this through holes in an iron plate, or rolling it on a mandrel between grooved rolls, continued to be used, and it was not until 1820, when Thomas Burr, a Shrewsbury plumber, constructed a press operated by hydraulic power, that the manufacture of lead pipes by extrusion or, as it was then called, squirting, came into actual operation. Burr's machine, of which Fig. 3 is a sketch, consisted of a strong cylindrical container (*a*) secured to the top frame of a hydraulic press, and having in its upper end a steel die (*b*). The bottom end was sealed by a close-fitting plunger (*c*), into which there was screwed a mandrel rod (*d*), and which was attached to the hydraulic ram. After withdrawing the plunger to the full extent, lead was poured into the container through the die orifice, and, following an interval for solidification of the metal, the hydraulic ram was operated to force the lead up through the die, to form the pipe. At the end of the stroke the pipe was cut off above the projecting mandrel and hot lead was poured on to the remaining piece to melt it and clear the die. A difficulty was encountered, by no means unknown even to-day, in securing pipe of uniform thickness in its wall. This was due to the long mandrel bar becoming bent so that it lay out of centre in the die, and recourse was had to wedging the tip of the mandrel in the die before filling the container.

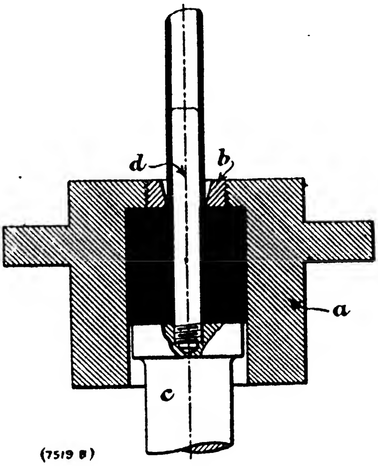

FIG. 3.—Arrangement of first press for hydraulic extrusion of lead pipes.

By substituting a rectangular container provided with a slit aperture, Burr also made sheet lead. For this one side of the slit die aperture was formed by a plate, adjustable by means of screws, so as to allow sheets of different thickness to be formed.

A modified press was made by J. and C. Hanson in 1837 in which the lead container was made the movable part by mounting it on top of the main ram of a hydraulic press, and a stationary plunger, attached to the head of the press frame, was used. The die was now fixed in the bottom of the container so that the awkwardness of the previous charging method was avoided; this being now done through a hole in the upper part of the container wall which was sealed by the plunger at the beginning of the working stroke. Two features introduced to secure improved concentricity in the pipe are retained in principle in certain types of lead press to-day. The first consisted in a means of centring the die by four adjusting screws; and the second in the use of a primitive form of bridge

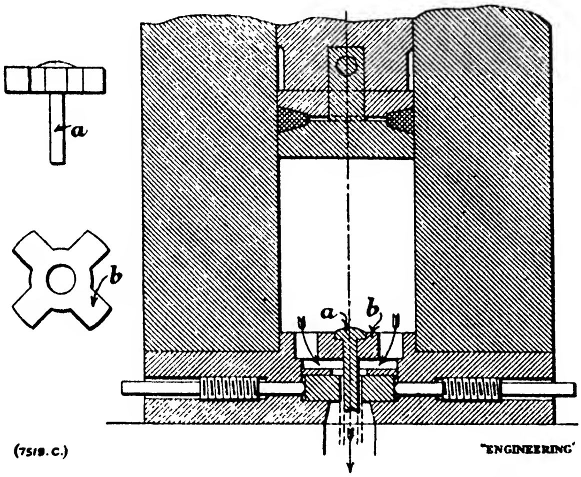

Fig. 4.—Early pipe press (1837), showing use of bridge die.

die, by which the long mandrel could be replaced by a short one (*a*), held in a support of cruciform shape (*b*) over which the stream of lead divided, to re-unite before actually entering the die. These arrangements are shown in Fig. 4.

The process of extrusion had become firmly established for the working of lead by the middle of the century, and the next noteworthy developments arose from the interest which was then being taken in the production of tin-lined pipes to overcome the danger of corrosion which occurs when lead pipes are used to convey certain waters and other liquors. In the first place this had been accomplished by running molten tin inside lengths of extruded pipe, but in 1863, Shaw used a press in which precast hollow billets of lead, with an internally cast sleeve of tin, as shown in Fig. 5, were charged cold into the container. Several billet presses of this kind were designed, but records show that very considerable difficulty was met in arriving at the correct shape of sleeve to give a uniform lining of tin in the pipe. This is not to be wondered at in view of the complexity of the flow which is now known to occur, especially in the direct method of extrusion, which was solely used at that time.

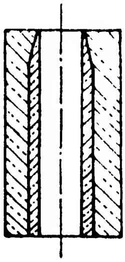
Fig. 5.—Form of tubular billet, with cast-in sleeve of tin, used in making tin-lined pipe.

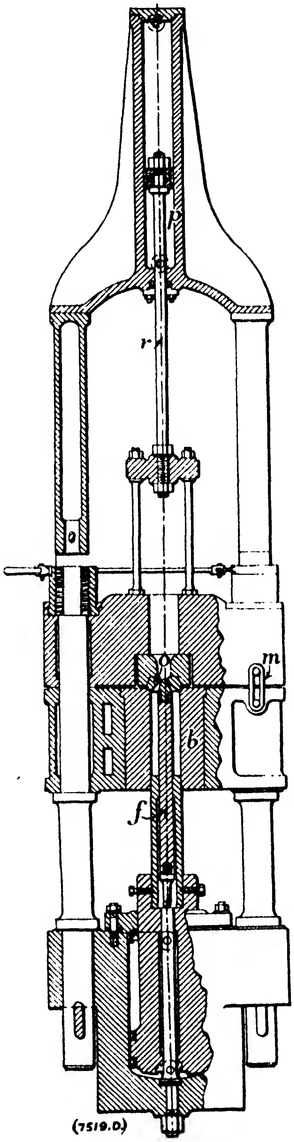

Fig. 6.—Press by Hamon, with many novel features.

A remarkable press for this work, invented in France by Hamon in 1867, which embodies many advanced features, is shown in Fig. 6. The principal points of interest are (1) the use of a fixed mandrel bar, *f*, into which could be screwed points, *r*, of different sizes, over which the extrusion ram travelled. (2) The container, *b*, was made with ducts in its outer jacket through which steam or hot gases could be circulated to raise its temperature to 210° C. This provides the first example of the use of a heated container. Pointing out the necessity for careful adjustment of the temperature to avoid melting the tin sleeve, Hamon suggested the use of a pyrometer. (3) An auxiliary hydraulic ram, *r*, was used to bring the die, *o*, and die-holder, *m*, into position against the container, where it was locked. (4) An accumulator was introduced into the hydraulic system. Although the hydraulic accumulator had been invented by Sir William Armstrong in 1840, it does not appear to have been used hitherto in connection with extrusion.

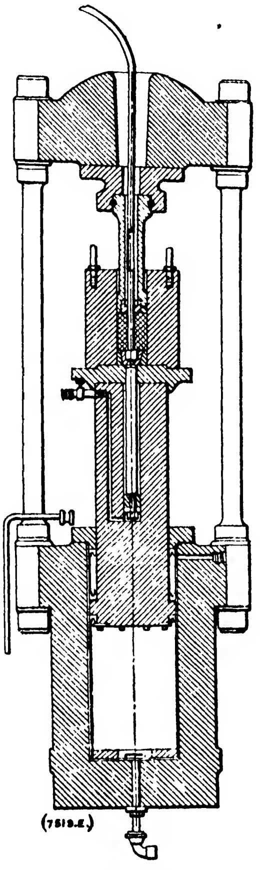

FIG. 7.—The first application of the inverted method of extrusion in 1870.

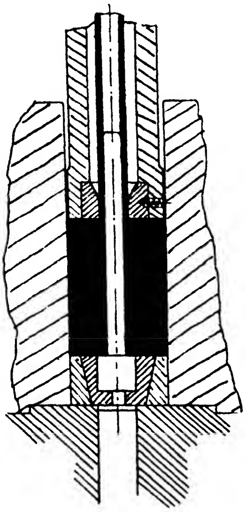

FIG. 7 (*a*).

The next stage in the evolution of the pipe press came with the introduction by Haines, and by J. and W. Weems, both in 1870, of the indirect or inverted method of extrusion. On the application of this method to copper alloys at a much later date, it was shown to have the effect of so altering the course of deformation occurring in the billet as to obviate a characteristic defect in extruded material. This will be discussed more fully elsewhere, but it is of interest here to note that the Weems', even at that time, claimed for the method that, since relative displacement of the billet and walls of the container was avoided, the metal remained undisturbed except in the neighbourhood of the die, and so made it possible to produce a more even coating of tin in the pipe.

A sketch of the Weems press is given in Fig. 7. The die is fixed on the end of a stationary extrusion ram which is bored out to allow the passage of the extruded pipe, formed when the container is raised by the main ram to force the extrusion ram against the end of the billet. The lead may be cast into the container instead of using precast billets, and when used in this way, the press has the advantage over the older ones that the open-topped container allows dross to be skimmed off the surface of the metal.

The indirect extrusion press is the one used for the manufacture of lead pipes at the present time, and improvements have been of detail only, so that the arrangement shown above is substantially that now in use. Although the development of extrusion has hitherto been traced in connection with the lead pipe industry, since that was by far its most important application, some use of the process had also been made in the production of sheet and of special shapes, such as cames for leaded windows, by the use of dies of suitable form. For solid sections of simple shape multiple-hole dies were commonly used, the use of which for pipe-making, though attempted, was not successful. Moreover, although lead was the metal chiefly used, there were extruded to a limited extent, in addition to the composite billets already referred to, other soft metals such as tin and solder alloys and even zinc. A noteworthy offshoot of the main line of development is provided by a series of ingenious devices for making, directly by an extrusion process, curved lead pipes for use as syphons, bends, or traps, which followed

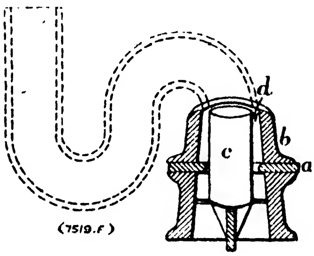

FIG. 8.—Early bend press.

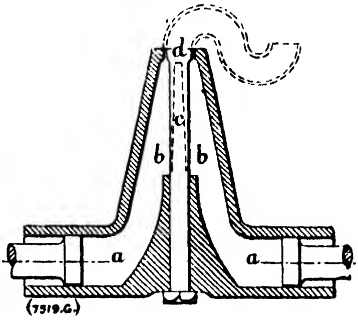

FIG. 9.—Device for extruding lead bends.

Cunningham's original patent in 1873. Two representative examples of these may be discussed. In Fig. 8 a casing (*b*), containing a mandrel (*c*) and a sliding diaphragm (*a*), was fitted to the end of an extrusion press. When the aperture of the diaphragm was centrally placed in the casing, lead delivered by the press could be extruded through the orifice at (*d*), forming the die, as a straight pipe; but by displacing the diaphragm laterally, the supply of lead could be regulated so that a greater quantity passed to one side than the other, causing the issuing pipe to bend over to a desired curvature.

In an alternative machine, shown in Fig. 9, lead was poured into the cylinders (*a*) (*a*) of a steel casting, which were closed by two rams each connected with a hydraulic cylinder. The rams were advanced to force the lead, after it had solidified, through the semicircular passages (*b*) (*b*) in which partition fins (*c*), on the mandrel (*d*), kept the two streams of lead separated until just below the die orifice, where they united to form a pipe in the annulus between the die and the mandrel. By controlling the speed at which the hydraulic rams moved forward, the operator could vary the rate of flow of lead on either side of the partition so that the greater volume passing through one side of the annulus produced a curved pipe, as in the case above. Bend presses of the latter type continue to be in common use.

Extrusion Presses for Sheathing Electric Cables. The rapid development of the electrical industry in the second half of last century, brought with it a need for a protective envelope for cables which would shield them against mechanical damage and be impervious to water. Lead suggested itself as almost the ideal material for this purpose, on account both of its pliability in facilitating the laying operations and its relative immunity from corrosion. It had been used as early as 1845 by Wheatstone and Cooke in the form of a strip which was wound spirally round the insulated conductor, and finally soldered along the overlapped edges. Subsequently, cable was threaded through 50-foot lengths of ordinary lead pipe, which were then joined end to end by soldering. The cables were only loosely encased in this way, and required to be tightened up by drawing or rolling. In a further method, a length of cable was laid out over rollers, with one end attached to the tip of the mandrel projecting through the die of a lead pipe press, and lead pipe was then extruded over the cable.

In 1879 there were devised by Borel in France and Wesslau in Germany the first methods by which a lead sheath could be directly extruded on to cables. In both cases vertical extrusion presses were used in which hollow-cast billets of lead were extruded as a tubular sheath over an insulated conductor which was passed into the press through a hollow mandrel and issued through the tubular ram. Fig. 10 shows the general arrangement of the Borel press. With the ram, *f*, swung aside, a billet heated to 120° C. was placed in the container, *p*, and extruded as a tube through the annulus between a die carried on the nose of the extrusion ram and the conical end of a mandrel tube, *g*. The latter moved with the extrusion ram, being connected to it by means of a crosshead (not shown in the diagram). The conductor entered the press via a bath of molten insulating wax, through the mandrel tube, and passing thence inside the lead pipe as it formed, emerged through the hollow extrusion ram, running finally over a pulley, *r*, to the coiling drum. An illustration of this historically interesting press is given in Fig. 11. Although it worked successfully, it had the disadvantage that a continuous length of cable could not be sheathed owing to the necessity of cutting it to allow a fresh billet to be inserted, and while this could have been avoided by casting the charge of metal in the container, it was apparently considered impracticable because of the damage which the high temperature would have caused to the insulation where the cable passed through the mandrel during filling.

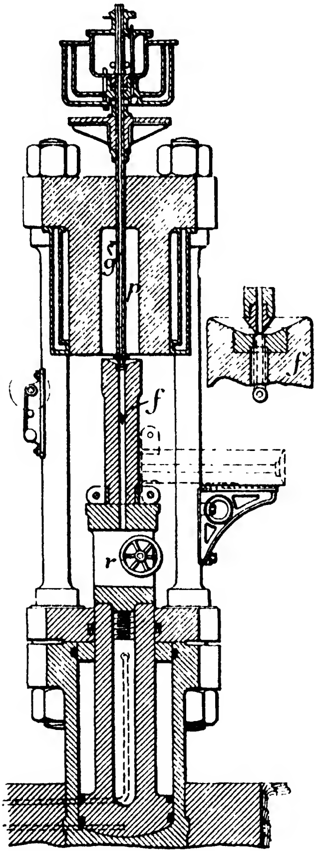

(7519.E.)

FIG. 10.—The first cable sheathing press made by Borel in 1879.

Two years after this, there was brought out by Huber in Germany the press illustrated in Fig. 12. This operated on the same principle as a lead bend press already described above, to which its origin has been attributed, in having two hydraulic rams (*a*) (*a*), Fig. 13, acting in cylinders opposite to each other, to force lead into the die-block placed between them. Holders (*c*) (*d*) carrying the hollow mandrel or point-holder through which the cable entered at right angles to the axis of the containers, and the die (*f*) and base ring (*h*) were screwed into the back and front of the die-block, respectively; both the point of the mandrel (*e*) and the die being replaceable to suit the size of cable which was required. In addition to the longitudinal adjustment by means of the screwed holder, the die could also be moved laterally by four wedge bolts (*g*), to afford a means of controlling the concentricity of the sheath. The two cylinders, heated by an oil-fired furnace beneath, were filled with lead through openings in their wall at a point farthest from the die-block, from a melting-pot set in a furnace on top of the press, after which the press rams were moved forward sufficiently to expel air and some of the dross carried in with the lead, and then seal the filling holes. When the lead had solidified, the rams, set to

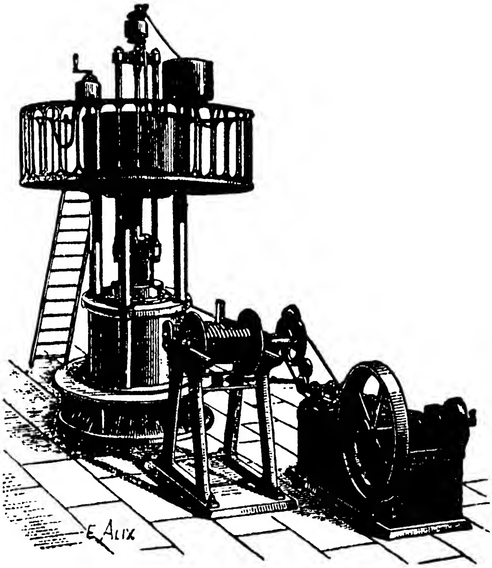

FIG. 11.—Drawing of the Borel press.

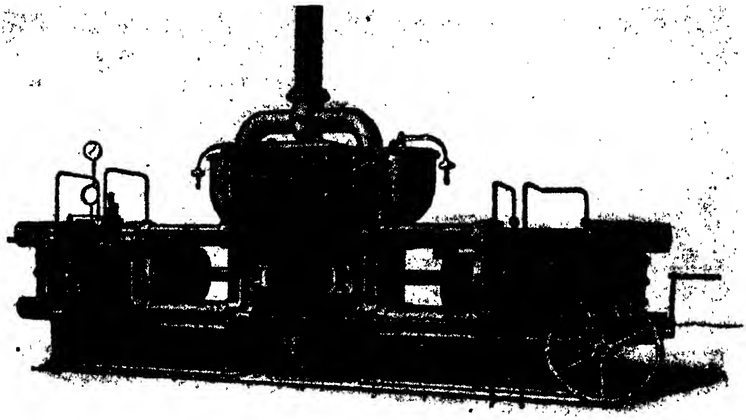

Fig. 12.—The Huber cable press.

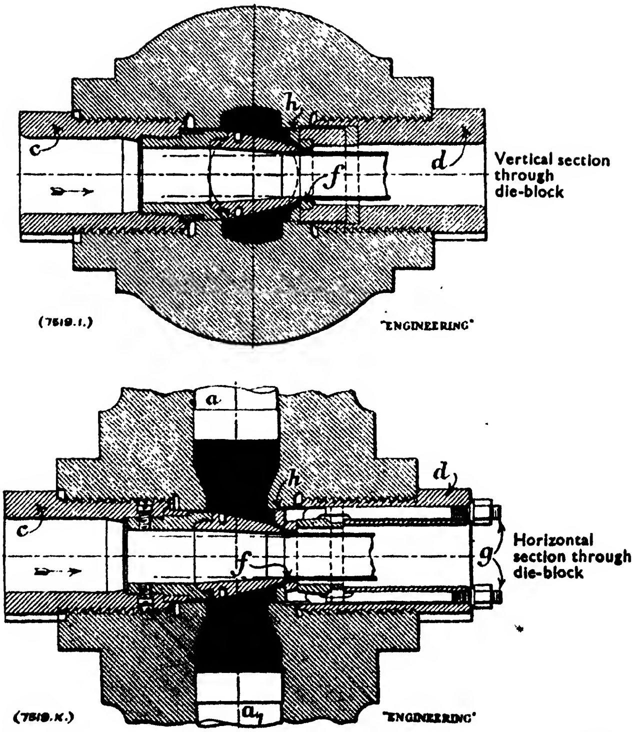

Fig. 13.—Showing the arrangement of the die and mandrel in the die-block.

provide equal pressure by an equalizing valve, were operated to drive it round the point-holder where the two streams met at the top and bottom of the latter, flowing forward subsequently through the die aperture as a sheath over the cable, which was thereby drawn through the press. These machines met with considerable success and found wide application at one time. By their means long lengths of cable could be sheathed without necessity for soldered joints since consecutive charges of lead could be made into the containers at the end of each extrusion stroke. Large units up to 5000 tons total pressure capacity were in operation by the beginning of this century and their use has only recently been abandoned. The chief difficulty which arose with them appears to have been in maintaining an even flow of lead from each container, due to small differences in temperature between the latter and thus of plasticity in the metal, so as to insure that two equal streams came together in the die-block to form a closed sheath which was free from the danger of splitting along the weld seams.

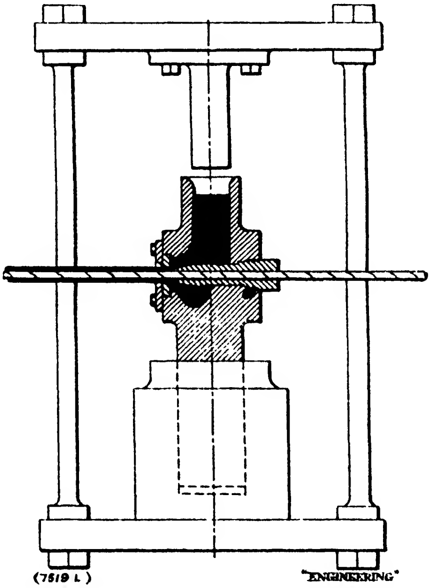

FIG. 14.—Eaton's vertical press for sheathing continuous lengths of cable (1880).

Concurrently with the development of the horizontal press just described, there was evolved a vertical cable press, which had its origin in America with the design in 1880 by Eaton, shown in Fig. 14, and which was adapted from the ordinary pipe press. A charge of lead cast and solidified in the container was made to flow circumferentially round a mandrel set transversely across the bottom of the container and was extruded, at right angles to the axis of the latter, over a cable threaded through the mandrel. This press lent itself to the sheathing of long cables in the same way as the previous one. It was much improved in 1885 by Robertson, who made a special block to hold the die and mandrel, upon which the now separate container rested. In its modern form, which is described in Chapter III, the vertical press has almost entirely superseded other types.

Application of Extrusion to Copper Alloys. The advanced state to which extrusion had been brought in the service of the lead industry and the manifold advantages which it offered naturally directed attention to the possibility of its utilization for other metals possessing better mechanical properties, such as the brass alloys, which, while much harder than lead at the ordinary temperature, were capable of being wrought when at a red heat. Records exist of several efforts to do this during last century, but the difficulties, at first, proved too great, and the lead presses which were, in many cases, used for experiment were unsuitable. A report of one trial states surprisingly that " it was anxiously and unexpectedly found that when the brass block came to be subjected to pressure, the zinc left the copper, thereby producing a zinc pipe and leaving the copper behind . . . proving that the atoms of brass composition, united by fusion, were only mechanically arranged, not chemically combined ". The main difficulty as compared with previous practice was that even the brasses most susceptible to hot work do not become sufficiently plastic to undergo the heavy deformations involved in extrusion until they are heated to a temperature of at least 600° C., so that the problem was by no means only that of providing a powerful press. Not only had the temperature of the metal to be maintained within the working range where it could be dealt with under the pressures available during the extrusion stroke, but the question also arose of providing dies, containers, and other parts of composition and design to withstand the unusually severe thermal and stress conditions, and that at a time when little development of such special steels as are now available for such service had taken place. It is therefore hardly possible to overestimate the achievement of Alexander Dick (see footnote, p. 19) in successfully overcoming the obstacles involved. On his inventive genius has been laid the foundation of the modern hot extrusion process, which has now been extended far beyond its original limitations to a stage where it covers most of the technical non-ferrous alloys, and where it has become one of the major metal-working processes in the field. Dick's first patent for an extrusion press was obtained in 1894 and was followed in the next few years by several others as experience was gained. Instances which he gives of alloys to which the method was applicable are shown below:

	Cu	Zn	Fe	Al
1	58	40	2	–
2	85	10	–	5
3	90	–	–	10
4	60	40	–	–

One of his early designs is shown in Fig. 15. The horizontal press frame was braced together by four tie-rods (*a*). A heavy cross-head (*b*) formed one end of the press and supported the die, which was held in position against the container by a pair of jaws, pivoted at the base of the cross-head in the manner illustrated in Fig. 16. The container (*c*) held and centred by the set-screws (*d*) was surrounded by a furnace jacket heated by coke or gas. The billet (*f*) heated to a plastic state was fed into the container from the front. With the object of preventing the ram from becoming wedged by the escape of metal past its sides, a dished or corrugated disc (Fig. 15*a*) was placed between it and the billet. At the end of the extrusion, the jaws were opened to allow the die and unextruded remnant to be pushed out. A persistent source of trouble was encountered in that the heat given up by the billet caused unequal heating of the thick-walled container so that it frequently cracked. To meet this, compound containers were introduced. One of the first of these, shown in Fig. 17, has a thin tapered inner liner (*a*) surrounded by casings (*b*) (*b*), with the annular space between them packed with some such material as crushed granite or asbestos to afford heat insulation; the whole being encased in the strong outer

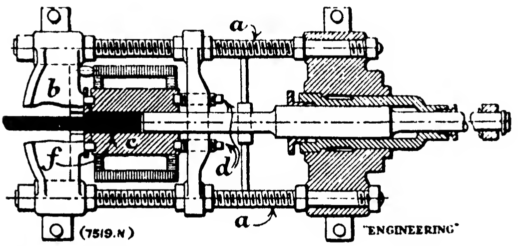

FIG. 15.—Horizontal extrusion press designed by Alexander Dick in 1894.

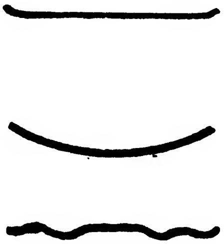

FIG. 15 (*a*).

shell (*c*). The idea of this was that although the inner liner became hot it would suffer less damage from heat stresses than a thicker one, and would moreover be easily replaced, while the outer shell being at a much lower temperature would retain its strength and therefore be capable of resisting the pressure. In addition, the heat of the billet being better maintained, it could be extruded much more readily. This construction did away with the need for external heating of the container, though it had to be warmed up to begin with by a gas-burner or by inserting a hot block of iron. For a time, as an alternative to the use of preheated billets, the practice was also followed of casting the metal directly in the con-

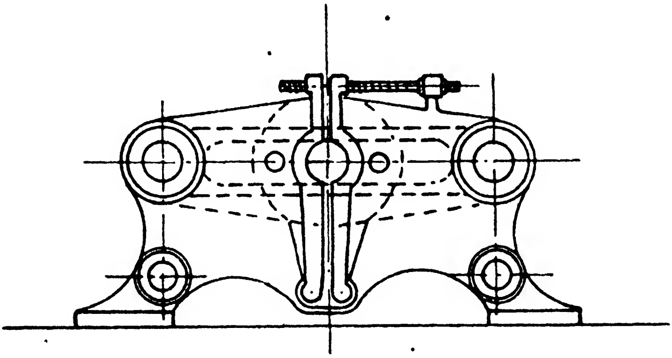

Fig. 16.—End view of above, to show the method of securing the die.

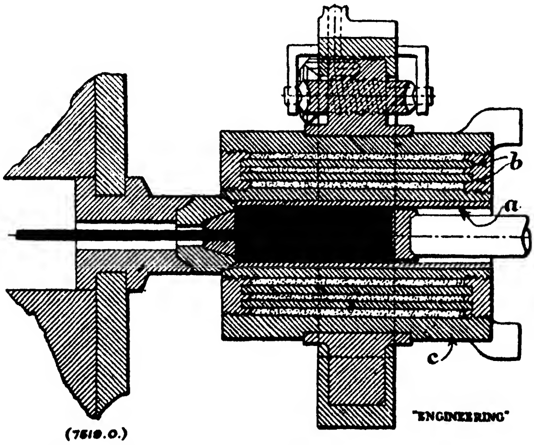

Fig. 17.—Dick's insulated container, mounted on trunnions, for the direct casting of billets.

tainer, which was mounted for this purpose on trunnions so that it could be turned into an upright position for casting. A plate closed the bottom of the container during this operation. An improved method of supporting the die in a holder placed in a diehead, as seen in Fig. 17, was soon adopted, and this assembly was locked during operation by a transverse slide buttressed against the cross-head of the press.

The diagram also shows the use of a loose follower block behind the billet which could be preheated so as to avoid cooling the latter; the ram, being then made with a clearance in the container, could be readily withdrawn.

The production of round rod and other solid sections was soon augmented by the manufacture of tubes from hollow-cast billets, though considerable difficulty had to be met, owing to the inadequate material available for the mandrel, in keeping it cool enough to prevent breaking; and in securing tubes of concentric bore. Many of these troubles yielded only slowly as steps were taken to improve machinery and materials, and as technique and experience were gathered, but Dick must be credited with many of the first steps which opened the way to progress, as, for instance, in his experiments with various types of fixed and floating mandrels. Such possibilities, too, as the application to copper alloys of inverted extrusion through a hollow ram, and the use of an electrically heated container, were also envisaged by him. In concluding this historical survey it may be said that although radical changes in design and accessory equipment have taken place during the last forty years, extrusion presses at the present time continue to embody the principles discovered by Dick.

FOOTNOTE TO CHAPTER I

George Alexander Dick was born in 1838 at Offenbach-am-Main in Germany, his father being of Scottish descent and his mother English. After studying under Fresenius, Bunsen and Kirchoff, he became an analytical chemist in a German ironworks, and was subsequently appointed blast-furnace manager to a works in Spain. Later, with his brother C. A. J. Dick, he opened up a general engineering business in Paris, which was successful until the outbreak of the Franco-German War in 1870, when he settled in England, where, with others, he founded the Phosphor Bronze Company of London, which he managed until 1881. For the next few years he devoted himself to investigating the possibilities of other copper alloys and to improving the brasses. The benefit of adding iron to brass had already been found by Baron Rosthorn in Austria, but difficulty had been met in introducing it into the alloys. Dick discovered that this could be done with more certainty by the use of an iron zinc alloy. He finally began the manufacture of some of these alloys under the name of Delta, converting his business in 1888 into the Delta Metal Company Limited. After making a study of the behaviour and flow of copper alloys in connection with the production of stampings and pressings, he became interested in the idea of making rods, tubes, and sections by a cheaper process than those of rolling and drawing, and, after preliminary experiments in a small vertical hydraulic press, he was eventually successful in 1894 in extruding certain brasses and other copper alloys, and started to manufacture by the process in London, Birmingham, and Düsseldorf. Upon his inventions, which he continued to improve up to the time of his death in 1903, the modern process of extrusion has been founded.

The above biographical details have been derived from notes prepared by Mr. Henry Rogers, to whom the author is indebted.

CHAPTER II

THE EXTRUSION OF LEAD AND OTHER SOFT METALS

In spite of the fact that tubes of metals other than lead are now used to a considerable extent for the distribution of gas, water, etc., the latter has by no means been superseded, especially in England, for these purposes, and large quantities of pipe are extruded. Lead pipe has also special applications in the chemical industry by reason of its resistance to many corrosive media. This metal in the extruded form, besides its very important use for sheathing electric cables, which is separately considered in the next chapter, is employed also in a variety of special shapes and sections for such purposes as the sheathing of T-section steel bars for patent glazing, mouldings, bullet rod, etc. Vertical hydraulic presses operating by the inverted process are those mainly used for pipes and other products. Their general arrangement follows that shown in Fig. 7. Changes in design during the last fifty years have been slight and consist mainly in improved materials for their construction and in the ancillary gear, such as pumps, etc. A unit of recent type is shown in Fig. 18. The container is moved during the stroke of the main ram, on top of which it is mounted, over the fixed extrusion ram, being guided in its travel by slides on the press columns; and the return stroke takes place by means of the two small hydraulic rams arranged at either side of the frame. A cooling channel, through which steam is passed, is provided between the jacket and liner of the container to hasten setting of the charge of lead. The die is carried on the nose of the extrusion ram, and as the pipe is formed it passes up through the latter and is bent over the pulley above on its way to the coiler. Pipes above about 2 in. in diameter are not coiled but are seized by special crane hooks and drawn up to a higher floor to avoid flattening. The presses are worked directly off the pumps without the use of an accumulator. A common capacity is 500 tons, with containers holding a charge of 250 to 500 lb. of lead, though much larger units have been built for special purposes, as, for example, that installed by the American Smelting and Refining Company having a total pressure of 1500 tons, in which a charge of 4000 lb. is cast, and which is capable of extruding pipe from ½ in. to 12 in. inside diameter. The particular advantage secured is that very large pipes, e.g. 12-in. diameter, ⅜ in. wall thickness, and 22 ft. in length, for use in chemical plant, can be made from a single charge of lead, and thus the presence of a weld where consecutive charges meet, which is liable to unsoundness, as described below, is avoided.

In the operation of a pipe press, molten lead at a temperature of about 400° C. is supplied through a chute to the container from a melting kettle holding 2–3 tons of metal. After skimming off the dross which collects on the surface of the charge, the container is raised so as to bring the ram against the surface of the lead under a small pressure in order to lessen oxidation and avoid a contraction pipe in the casting. A thin coating of tallow is applied to the mandrel and ram between each operation. The lead having set, pressure is increased to start the extrusion of the pipe. The temperature at which the latter issues varies between 200° C. and 250° C., tending to rise during the operation. When a slug or "sud" of an inch or so in thickness is all that remains in the container, the press is stopped and the container is recharged.

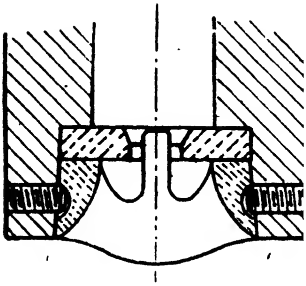

FIG. 19.—Bridge die, with short mandrel rod supported by four spider arms, seen in position in the end of the ram.

The mandrel, which is secured to the base of the container, passes for the greater part of its length through the die during the working stroke, and in order to diminish friction between the emergent portion and the pipe, which is moving much faster, a slight taper of 1–2 thousandths of an inch is given to it. In making pipe of a very small bore, the mandrel, being thin, is easily bent out of centre, leading to eccentric pipe, and to meet this the practice is sometimes adopted of using a bridge die in which a short mandrel bar is connected to the die below the constricted aperture by spider arms, as shown in Fig. 19. This device is, however, not regarded with favour and its use is being abandoned due to the fact that the radial welds formed where the streams of lead re-unite after dividing over the supporting arms are frequently imperfect. The reason for this is that inclusions of dross and oxide contained in the metal

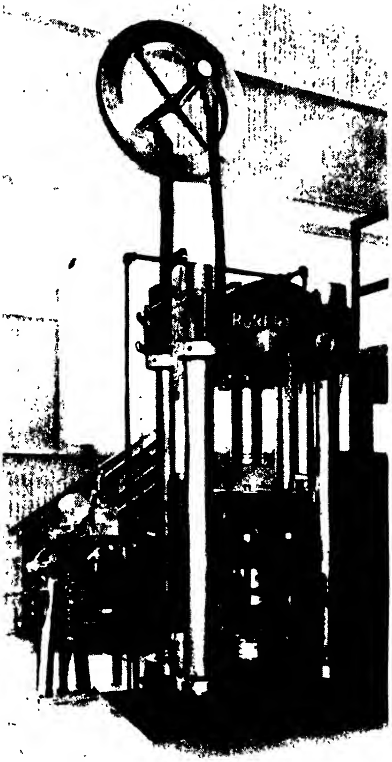

FIG. 18.—Robertson press for lead pipes.

(*Courtesy of John Robertson Company.*)

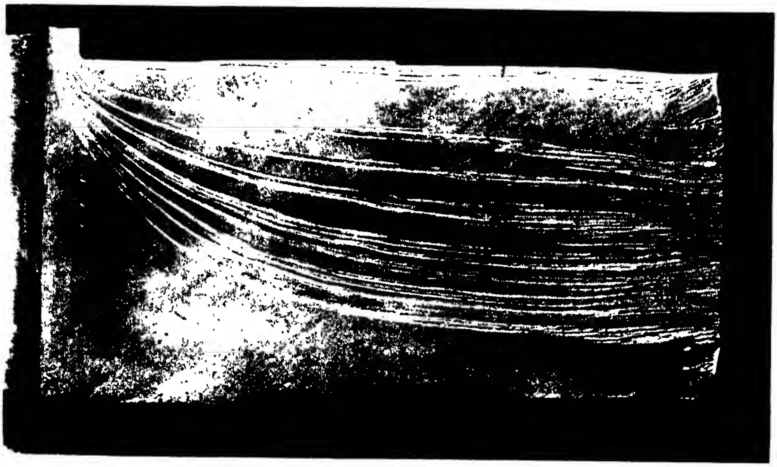

FIG. 20.—Half-section of the residual slug from a lead pipe press showing oxide layers at the interface between successive charges.

(Natural Size.)

FIG. 21.—Transverse section of lead pipe with concentric rings of oxide.

(× 4.)

become strung out longitudinally in the wake of any obstruction placed in the lead stream, and prevent metallic union between the separate parts. Transverse sections of pipe made in this way show, when etched, a discontinuous crystalline structure at the welds, which may lead to splitting of the pipe in service.

Defects occurring in Lead Pipes. Lead pipe made in the foregoing manner is liable to certain defects which are directly associated with the extrusion process. Apart from eccentric pipe which has its origin in wear, faulty adjustment, or unsatisfactory press design, the chief troubles are those arising from oxide and other inclusions, and from excessive and irregular grain-size in the metal. First of all, unless special precautions are taken during melting, such as are discussed in Chapter III, the molten lead carries with it into the container considerable amounts of dross which, though it tends to rise to the surface where it can be skimmed off, can never be completely eliminated in this way, so that the top layer in particular is relatively impure. As a result the first few feet of pipe produced are of poor quality and are cut off and rejected; unless, of course, the pipe being made forms part of a continuous length requiring more than one charge, when this is obviously impossible. In the usual form of press, in which the slug remaining from one operation is left in the container, the surface of the slug becomes oxidized during its exposure to the atmosphere, and it is also the seat of dross and of charred oil from the lubricant on the ram. Although the wash of incoming hot lead of the next charge tends to melt the surface and flush away the impurities, it is by no means completely effective in doing so, and there remains therefore after solidification a stratum of dirty metal at the junction between the two charges. The course of deformation in the lead during its extrusion, which is discussed with reference to the inverted method in Chapter V, is such that this stratum, lying as it does towards the bottom of the container, does not become involved in the flow and pass into the forming pipe until a late stage in the extrusion of a charge, and is then carried into the die to form a long, tapering scarf joint which appears in a transverse section of pipe as a ring of oxidized material between annuli of sound metal. This gives rise to the defect known as lamination. As a rule only a portion of the dirty stratum passes into the die in this way before the press is stopped for refilling, and the remainder of it is left in the slug. Fig. 20 shows a section of part of one of these slugs, extracted from the container after several successive charges, in which the separate layers due to each are easily identifiable. It will be appreciated therefore that the slugs become the source of multiple laminations such as are seen in the section from the back end of a length of pipe in Fig. 21. Here again the rejection of potentially faulty material from the back end of the extruded pipe may be practicable.

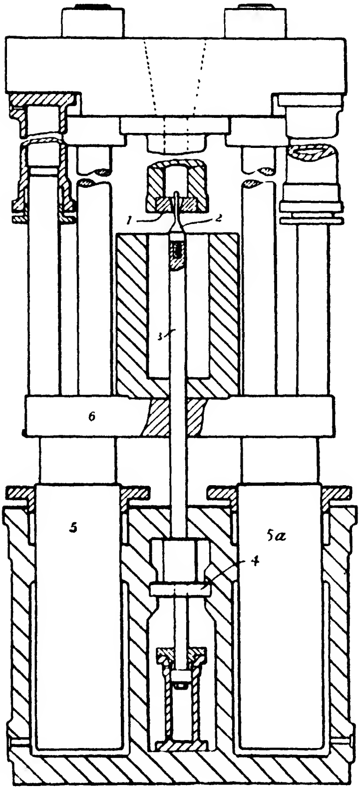

Fig. 22.

A means of circumventing lamination is obtained by removing the slug at the end of each operation, and this is arranged for in a recently patented press[1], shown in Fig. 22, which is possibly inspired by the old Hamon press already described. It operates, as is usual in lead presses, by the indirect method; the die (1) being fixed on the stationary ram, but the mandrel (2), instead of being rigidly attached to the base of the container, is screwed into a robust mandrel bar (3) passing through the bottom of the container and held securely during extrusion by a hydraulic block (4). The container is raised vertically for the extrusion on the two hydraulic rams (5, 5*a*) connected by a cross-head (6). By this arrangement the relative position of die and mandrel remain unaltered during the working stroke, and thus comparatively short mandrels, which are readily interchanged, can be used, while for pipes of a very small bore the difficulty ordinarily met of adequately supporting a long thin mandrel is obviated. A solution of this particular difficulty had, in fact, already been found in Germany along similar lines[2]. At the end of the operation, the slug in the bottom of the container is resting on the tapered shoulder of the mandrel, and when the container is lowered, it stays behind on the mandrel. A slotted plate is then placed on top of the container beneath the slug to hold it while the mandrel is lowered by means of the small hydraulic ram at the base of the press, when it can be severed from the pipe and removed, thus leaving the container empty for the next charge of lead.

The continuous extrusion press developed primarily in connection with the sheathing of cable, described in Chapter III, has also been adapted in England to the production of lead pipes which are free from the defects brought about by the intermittent nature of extrusion in hydraulic presses.

The close attention given in the last few years to the causes of failure of lead pipes in service has brought into prominence the question of controlling the grain size of the metal. It is now known that the relatively slight deformation which is imparted to the pipe when it is bent over from the vertical to the horizontal position on leaving the press, and that occurring during coiling, while it is still at a high temperature, may bring about those critical conditions which cause the development of huge crystal grains, frequently occupying the whole cross-section of the wall of the pipe at opposite sides of the diameter corresponding to the inside and outside of the bend in the pipe. Steps are taken in many instances to avoid this trouble by cooling the pipe as it leaves the press and before it is coiled by passing it through a water-trough or by spraying it. The alternative method of alloying the lead, referred to below, so as to bring about the presence of a highly dispersed constituent which acts to restrain grain-growth, has also been adopted.

Lead and Lead Alloys used in Extruded Products. Among the chief characteristics of lead upon which its applications as pipe and other extruded forms depend, are its pliability in manipulation, the comparative ease of its extrusion, and the high degree of immunity which it possesses to corrosion in the atmosphere and in a variety of media. Its resistance to sulphuric acid, for instance, make it especially valuable in the manufacture of the latter. On the other hand, it suffers the drawback of extreme mechanical weakness, and is liable to undergo continuous deformation, or creep, under very small stresses, and indeed, in some cases, under its own weight; and it is readily susceptible to cracking or brittle fracture under vibration or other fluctuating stresses, due to its low fatigue range.

Whilst the majority of lead pipes are made from soft and common varieties of lead, the actual grade used depends on the particular applications for which they are intended. Ordinary commercial lead pipes frequently contain a small quantity of tin, which is added to increase the stiffness, an average figure for the addition being 0·5 per cent. Moderate amounts of alloyed lead are now utilized, especially with the aim of reducing failure due to fatigue and creep. An example of one of these which enables a saving of weight of one-third to be made, owing to its enhanced mechanical properties, is that developed by the British Non-Ferrous Metals Research Association, containing 1·5 per cent tin, 0·25 per cent cadmium, the application of which for water pipes is approved by the British Waterworks Association. For chemical purposes especially pure lead containing only traces of other elements are required, though selected additions of other metals have been found of value in raising creep and fatigue resistance. Interesting progress has been made with an alloy containing the eutectic amount, 0·06 per cent, of copper in bringing about better control of grain-size, together with improved creep behaviour under load. The benefit of this amount of copper in lead for acid chambers is well recognized. The following analysis, given by Peters[3], is for an acid-resisting lead produced by the American Smelting and Refining Company:

	Percentage		Percentage
Copper	0·06	Iron	0·0001
Bismuth	0·019	Nickel Cobalt	0·0001
Antimony Arsenic Tin	0·0001	Cadmium	0·0002
		Silver	0·0004
Zinc	0·0002		

The reason for the bismuth addition is the enhanced resistance to chemical attack which its presence is reputed to confer.

Solders of varied composition are extruded as thin rod or wires from small vertical or horizontal presses, using multiple-hole dies having up to 15 apertures. Solder in the form of a thin tube with a flux core is also made in presses resembling those used in sheathing cable. Small precast billets, heated to approximately 100° C., are generally used for this. Extrusion is used in the manufacture of certain ornamental sections in alloys of the pewter class. The proneness to cracking or "feathering" of the edges of sections in the extrusion of these alloys can only be avoided by extruding them very slowly.

REFERENCES

[1] Brit. Pat. No. 457,445.
[2] *Metallbörse*, 1926, **16**, 2830–1.
[3] F. P. Peters. Producing Lead for Chemical Equipment. *Met. Ind.* (London), 1940, **56**, 436–8.

CHAPTER III

THE EXTRUSION OF LEAD CABLE-SHEATHING

By far the most important branch of the extrusion process, as it relates to lead and its alloys, is that devoted to the production of protective sheathing on electrical conductors for power and telegraphic transmission. Indeed, the use of lead for this purpose constitutes one of the major industrial outlets for the metal. It is estimated[1] that in a recent year 27 per cent of the production of lead in the United States was used for cable sheathing; while in England the consumption is given by Dunsheath[2] as 69,000 tons of lead per annum.

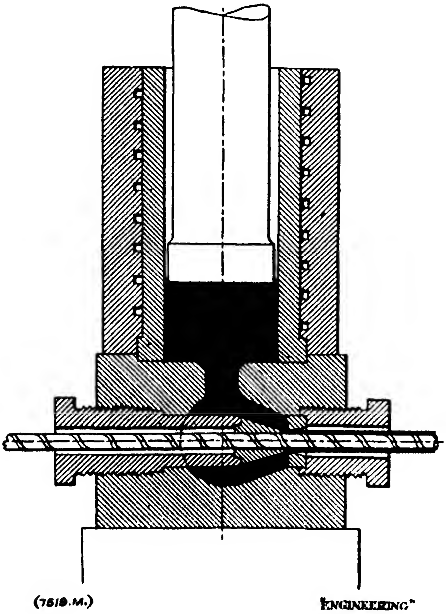

Fig. 23.—Diagrammatic section through the container and die-block of a vertical cable press.

The vertical hydraulic cable-sheathing press to which reference has already been made in Chapter I, is the one most widely adopted at the present time. Its operation may be explained with the aid of the sketch, Fig. 23, which shows a section through a die-block and container. To begin the cycle of operations, the container is filled through a chute from a lead-melting kettle, and the foam and dross which collect on the surface of the metal are removed as far as possible, after which the container is brought under slight pressure against the extrusion ram to avoid oxidation and to prevent a contraction pipe forming in the lead as it solidifies. A period of 7 or 8 minutes is allowed for the metal to freeze and cool to a suitable temperature for extrusion. This is generally about 250° C. The cooling

FIG. 24.—The shape of the mass of lead in the forming chamber of a die-block, with two entries from the container.

(*Goler and Schmid.*)

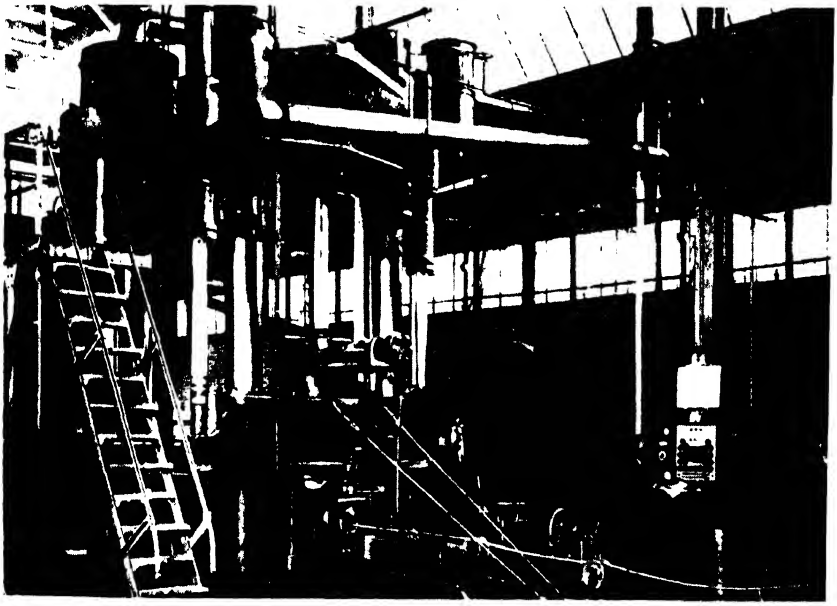

FIG. 25.—Vertical cable press by Hydraulik, with underlying hydraulic cylinder.

[*Facing*]

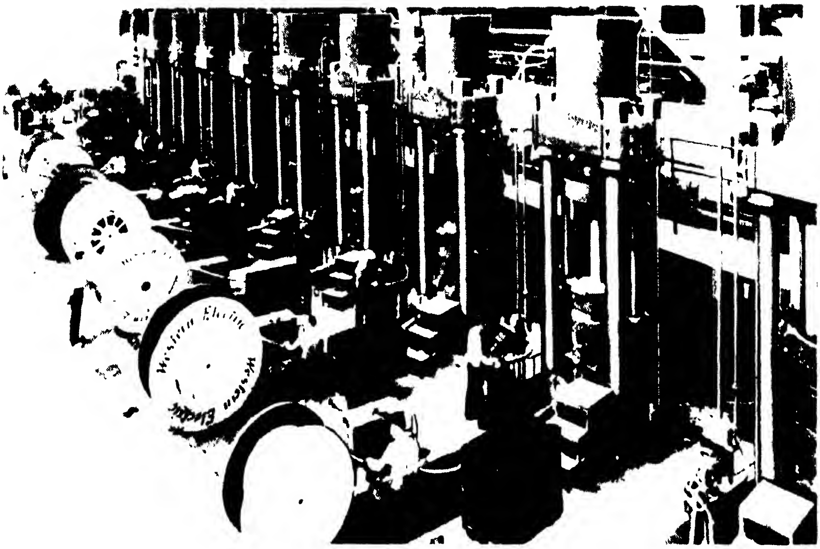

FIG. 26.—Battery of Robertson vertical cable presses arranged with the main hydraulic cylinder in the head of the frame, at the works of the Western Electric Company.

(*Courtesy of Wire and Wire Products.*)

may be hastened by passing steam or a trickle of water through a helical channel formed between the container jacket and the liner; though if the latter method is used, care is necessary to avoid the setting up of thermal stresses causing cracked liners, by passing the water first through a preheater coil. The solid lead is then forced by the ram through the channel in the top of the die-block into a forming chamber which surrounds the hollow point-holder or mandrel, in the nose of which a detachable point is mounted. The lead divides into two streams in passing round the point-holder, which meet and weld together on its under side, finally flowing as a reducing annulus to the die, from which it emerges as a sheath which grips the cable sufficiently to draw it forward through the point-holder off a drum placed behind the press. In some forms of die-block the lead enters from the container through two channels with a bridge between, the separate streams in this case passing round the point-holder to form seam welds on top of, as well as below, the latter. Fig. 24 shows the shape of the mass of lead occupying a die-block of this kind. As it leaves the press the cable is usually cooled by passing through a water-trough, or by means of a spray, and is then coiled directly on to a drum. When the greater part of the charge has been extruded the press is stopped, the ram is withdrawn and a new charge of lead is run in on top of the residual slug. The cycle is then repeated. During the stop for recharging, the cable in process of being sheathed remains in the die-block. In this intermittent manner several charges of lead may be applied as a continuous cover to one length of cable.

In general construction the press takes the form of a closed cast-steel frame—or more usually, one built up with tension columns—in either the head or base of which the hydraulic operating cylinder may be placed. An example of the second type is shown in Fig. 25. The container and die-block are carried on the main ram and ascend with it against the extrusion ram, which is fixed to the head of the press frame. A cross-head sliding on the press columns guides the container during the extrusion stroke, and to it there are also attached the rams of the two drawback cylinders for the return stroke of the main ram. This arrangement of the press has the advantage of requiring less headroom in the factory than the first type, since the main cylinder can be sunk in a pit below floor level; and in addition, there is no fear that water leaking past defective packing may enter the container or fall on to the cable entering the press. One minor drawback is that the position at which the cable enters and leaves the press varies with the height of the die-block during the stroke. A battery of presses using the alternative method, in which the container position remains fixed and the extrusion ram is attached to the main ram of an overhead hydraulic system, is illustrated in Fig. 26. The latter method, with moving ram and fixed container, is sometimes erroneously referred to as the inverted process. Actually, unlike the usual type of lead pipe press, both types of cable press employ the direct method of extrusion. In practice there seems to be little to choose between the two arrangements and both are in current use.

In size, which depends primarily on the diameters of cable to be made, presses range from 600 to 3000 tons total pressure capacity, with containers taking from 300 lb. to as much as one ton of lead in a charge, of such diameters as will allow a maximum extrusion pressure of 25 to 28 tons per square inch to be exerted. For making lead alloy sheathing, containers of somewhat reduced diameter may be required so as to increase the available pressure. The operating power is derived, almost universally, directly from pumps, which are usually of the three-throw variety on account of the steady delivery of water which they provide, and which are driven by variable speed motors of 25–150 H.P.

The die-block is a vital part of the cable press and great importance attaches to its design. A range of blocks suitable for each size of cable may be provided, or as in some modern machines, a universal block into which the appropriate points and dies may be fitted is used. In some instances the blocks may be split so that the inner surfaces against which the lead flows may be carefully shaped and finished by hand. The wall thickness of the sheath is regulated by adjustment of the relative position of the die and point, affected by the screwholders in the block. The concentricity of the product depends chiefly on the accurate positioning of the point in the die ring and on the uniform temperature of the metal entering the annulus from all sides. In most presses, provision is made for radial adjustment of the die by means of wedge bolts, whereby, when changing over to a new size of cable, correction can be made for eccentricity by extruding short trial lengths of sheathing and gauging the wall thickness. Some press manufacturers, however, prefer to fix the radial position of the die in relation to the point after test runs under working conditions in the assembly shop; taking the view that press operators tend to use any adjusting device to correct for eccentricity caused by bad temperature distribution round the die, instead of rectifying the latter, with the result that as the temperature conditions may alter during working, trouble is experienced. The question of temperature control in the die-block is one which calls for close attention in the production of sheathing to exacting specifications. To secure as uniform a temperature as possible, gas jets or electrical heaters are arranged along either side of the die-block and around the die. Thermocouples inserted in holes bored in the block at suitable positions provide the necessary indication for control. The die-block temperature aimed at varies in different works, but is generally between 160° and 200° C., 180° C. being most commonly used. Due to the replacement of the lead already in the die-block by hotter material from the new charge in the container, there is a liability for the temperature of the metal entering the die to rise during the extrusion so that a slight longitudinal variation in the wall thickness of the sheath is caused. The tendency for the heavier cables to sag as they leave the die, causes a variation in the wall thickness of the sheath between the top and bottom, and this may be corrected by adjustment of the die position or by providing a guide pulley in front of the press, to support the weight of the cable.

Defects in Cable Sheathing. In regard to the quality of the product, attention was for long directed principally to uniformity of dimensions of the sheath and to securing inconspicuous press stop marks; and little consideration was given to the possibility of internal flaws and weaknesses in the lead itself. But increasingly stringent demands on cable materials such as have come about, for example, with the introduction of high-voltage, oil-filled cables, as well as the costliness of breakdowns, have endowed the question of metallurgical defects with special importance, the more so since the other main cause of cable failure, insulation breakdown, had already been largely removed, thus throwing the former into greater prominence. In the last twenty years a great deal of careful study given to the production methods has provided a clearer understanding of many of the faults which are liable to arise and of their originating causes, and this has brought in its train many improvements in technique. In consequence, a marked reduction in the incidence of failures attributable to extrusion faults has resulted, and the proportion of these in comparison with those arising from

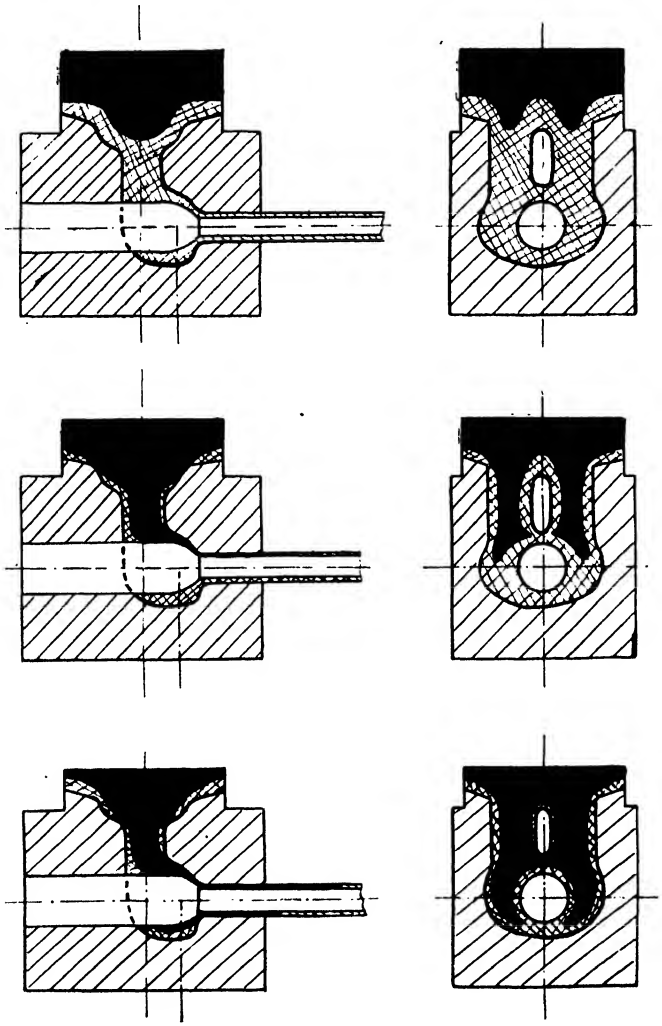

FIG. 27.—Showing the inter-penetration in the die-block of the metal of the old charge by that of the subsequent one.

other causes such as fatigue, creep, etc., is now relatively small. The work of Dunsheath and Tunstall[3], Bassett and Schneider[4], Atkinson[5], and others has shown beyond any doubt that the chief defects arise from the entraining, principally at the surface between

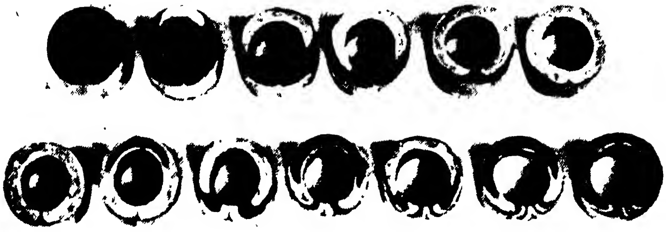

Fig. 28.—Sections of a tube resulting from the extrusion of alternate light and dark coloured charges through a single-entry die-block of the form used in the vertical cable-sheathing press.

(*Courtesy of the Institution of Electrical Engineers.*)

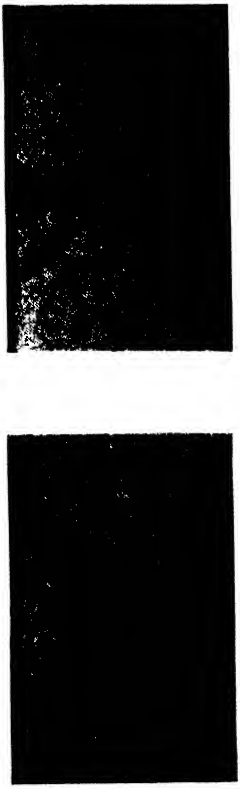

Fig. 29.—Example of the segregation of impurities in the top and bottom seams of cable sheathing in a particularly bad case.

(*Göler and Schmid.*)

two successive charges in the container, of lead oxide and dross, and to the occlusion of gas and air bubbles, already referred to in Chapter II in connection with the making of lead pipe. The subsequent distribution of these impurities in the product varies, however, from the latter case, not only because we are concerned here with the direct method of extrusion, itself causing a different type of flow, but also, of course, as a result of the peculiar flow of metal round the horizontally disposed mandrel. The diagram, Fig. 27, gives some impression of how the initially plane surface between two charges after filling becomes displaced as extrusion proceeds. As a result both of friction along the walls of the container and the internal surfaces of the die-block, and of the higher temperature in the centre of the charge, movement towards the die-block is fastest in the middle, where tongues of hot lead of the new charge intrude into the forming chamber inside the old lead. These pass gradually round the point-holder, the separate branches ultimately meeting to form weld seams above and below it. It will be recognized that, on starting up after refilling, the sheath will continue to consist for a considerable length entirely of the metal of the previous charge, and the new metal when it appears will do so as two tongues near the top side of the sheath. Over the next few feet of sheath, these tongues increase in size at the expense of the old lead, until they meet round the point-holder. As a rule the intrusion of the new into the old lead in this way can be traced in etched sections from successive positions along the sheath, being revealed by flow lines. Meanwhile the residue of the old charge becomes almost stagnant in the bottom corners of the container and contributes less and less to the stream of metal entering the die-block. By an illuminating series of experiments in which alternate cylinders of light and dark coloured wax were extruded through a model press, Dunsheath and Tunstall were able to follow the distribution of each charge in the final sheath. Fig. 28 shows, in the top row, sections cut from a length of tube in which a charge of dark wax was followed by a light one. The effect of several superimposed charges is shown in the row below. In view of the fact that the intersurface is a principal seat of inclusions, it is not difficult to understand that that length of the sheath in which the replacement of one charge by the next occurs is potentially a place where discontinuities may arise and trouble be experienced during service. This region, located a certain distance, according to the size of cable, behind the stop mark, is well recognized as one specially liable to show faults. The longitudinal weld seams at the top (when a twin entry die-block is used) and bottom of the sheath, which extend, of course, over the full length of the sheath, are also liable to be the sites of inclusions. The soundness of these seams depends on clean streams of lead being brought into contact under suitable conditions of pressure and temperature so that intergrowth of the crystals takes place across the junction. Perfect unification can only occur in the absence of oxide membranes and other deleterious impurities, and unless these are suitably reduced by precautions during melting and casting of the lead, the danger arises that, under stresses incidental to coiling or laying the cable, or those set up in service, a particularly objectionable defect in the form of longitudinal splits is met with. Microscopic examination of transverse rings of sheath reveals that without these precautions the granular structure of the metal in the neighbourhood of charge joints and weld seams is frequently very irregular, with fine grained areas which, even after annealing, are not brought up to the general grain size of the sheath as a whole. This feature is attributable to the presence of minute particles of oxide, drawn-out gas cavities, etc., which obstruct the normal process of grain-growth during hot working. Ordinary mechanical tests or short period bursting tests do not indicate that special weakness is associated with these areas ; they may, in fact, show increased strength, but, as Atkinson has shown, during tests in which internal pressure is maintained for several weeks, which approximate much more closely to service conditions, rupture occurs there preferentially. Photomicrographs of badly contaminated top and bottom seams, from examples given by Göler and Schmid[6], are reproduced in Fig. 29. It would be unfortunate if the foregoing remarks gave the impression that sheathing from the ordinary vertical cable press is inevitably defective in the sense discussed ; on the contrary, it should be emphasized that under conditions of good practice perfectly satisfactory cable can be produced with regularity.

Among other defects which may be formed in extrusion are transverse cracking and blisters on the surface of the sheath. The former, which is met with in all forms of extrusion, is due to intergranular weakness in the crystal structure at temperatures approaching the melting-point. Its occurrence in practice results, as a rule, from too high an extrusion speed, or temperature, especially with some of the lead alloys, such as that containing 0·85 per cent of antimony, in which small amounts of a low melting liquid phase may be formed at the die surface where friction is high. The occasional presence of blisters arises from air entrapped during pouring or to gas dissolved in the metal during melting.

Prominent stop marks, in the form of a circumferential ridge on the sheath, are often regarded with some dubiety. They are produced at that place on the sheath which is just emerging from the die when the press is stopped for refilling, due to the diminution of pressure at the die and its sudden increase on restarting. By careful operation of the hydraulic control valve, the marks can be rendered less conspicuous. Identical marks are formed when any extrusion press is stopped and restarted. Experience under service conditions and the results of bursting and other tests reveal no special liability on the part of cable sheaths to failure at such places. The possibility that a deterioration in properties might result from grain-growth in the metal adjacent to the stop mark during the waiting period has been examined by Radley [7] for lead and several alloys ; he concludes that this is unlikely to occur unless the temperature is above 200° C. at this point.

The recognition of the causes underlying faults in cable sheathing has led inevitably to the development of a variety of preventive measures and devices. It is impossible to deal in detail with all of these, but the importance of the question as a whole calls for a description in outline of the chief methods. The main sources of contamination of lead in the sheathing process can be classified as : (1) impurities contained in and on the surface of the original pigs. (2) Dross and oxide formed during melting and carried over to some extent with the liquid metal into the container. (3) Oxidation of the lead stream and the entraining of air during pouring. (4) The layer of oxide and other dirt on the exposed surface of the residual slug from the preceding charge in the container. The last two of these have received a good deal of attention, and much effort has been devoted to means of liquefying the top of the old charge so as to set free the dirt and promote a clean metallic junction between it and the newly poured metal, to the protection of the molten lead during casting, and to the elimination of the dross and froth which gathers on the surface by skimming or other means. Methods for this purpose include the use of an electric arc, or oxy-acetylene burner, which is lowered into the container to fuse the top of the slug. With the same object, bottom pouring in which the lead is led in down a conduit so that it impinges directly on the old lead, is frequently employed. Various methods have been devised to procure more complete removal of the impurities which accumulate towards the top of the charge. One of these consists of a spill-head attached to the top of the container as described later, while in another, illustrated in Fig. 30, a rectangular false head placed on the container has as one wall a sliding plate (*a*), which is moved across during solidification of the lead by a small hydraulic ram, pushing aside the metal in the false head, and exposing a clean surface, level with the container top, which is immediately brought into contact with the extrusion ram. To avoid oxidation during pouring, a number of operators have made use of CO_2 or other gases to flush out the container and produce an inert atmosphere, while success is also claimed in producing a good weld between the two charges, and reducing the amount of oxide inclusions, by a method in which the metal enters the container through burning hydrogen[8]. No one system or combination is universally preferred, and individual manufacturers adopt different practice in this respect.

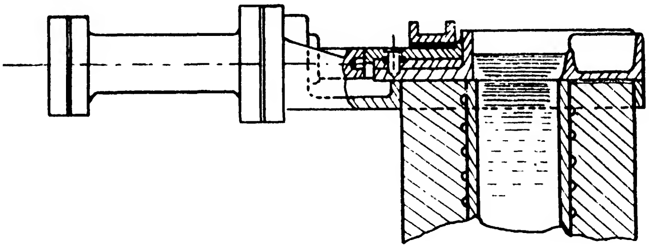

FIG. 30.—Drossing head fitted to the container of a cable press.

An interesting solution of the problem of oxidation of the old slug and in the pouring stage, which at the same time prevents gas unsoundness due to frothing, is by working *in vacuo*, the achievement of which has been described by Atkinson[9]. Fig. 31 shows a diagrammatic drawing of a press of the fixed container type, in which a metal hood secured to the container has a vacuum-tight stuffing box round the ram. Lead enters through a closed spout from the melting kettle. A high vacuum is continuously maintained, being released only when it is required to remove the shell of lead which squeezes up past the ram. This is kept small by having little clearance between the ram and the container. Alternatively, electrically heated plates placed as shown in the diagram, which melt and return the squeezed-out lead, can be fitted. In applying the vacuum method to a press in which the container moves during extrusion, the lead is fed in via an electrically heated pipe passing longitudinally through the ram. In this case, filling is carried out as the container is moved down, so that the lead enters without splashing.

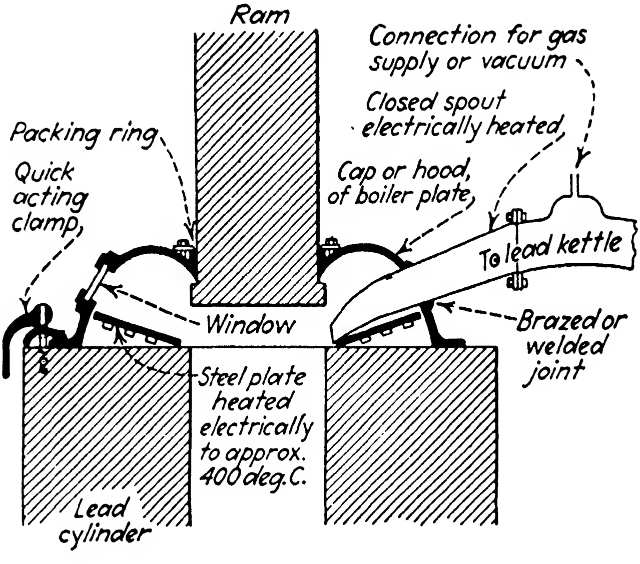

FIG. 31.—Vacuum-sealed container on a cable press. (*Courtesy of Wire and Wire Products.*)

All the above measures relate to the protection of the metal in the press itself, but it is now recognized that it is also necessary to assure that the lead is delivered from the melting unit in a clean condition and at a suitable temperature. The ordinary type of lead kettle in use prior to the introduction, in the last few years, of special units, is shown in the diagram (Fig. 32). Furnaces of this kind are heated by gas, oil, coal or electricity, gas being the commonest fuel. It will be seen that the products of combustion are passed over the metal bath, contained in a steel or cast-iron pot, to create a semi-inert atmosphere. The pot must hold at least enough metal to fill the container, and has usually a capacity of two to three tons. Larger ones capable of holding up to nine tons are now built, and have the advantage of ironing out fluctuations in temperature which occur when metal is withdrawn and replaced with cold pig lead. A casting temperature of about 400° C. is aimed at, and provision to control this automatically is favoured in newer furnaces. This aids in maintaining uniform conditions at the die-block, while excessive oxidation in the furnace is avoided; the point here being that, when lead is melted under oxidizing conditions, its surface becomes coated with litharge, the amount increasing with the temperature and becoming excessive above 500° C. In a kettle of the kind shown, surface dross carried down during charging, and that set free from melting pigs, remains disseminated to some extent in the bath whence it passes to the press. In addition, the dross removed from the furnace represents a loss of about 1 to $1\frac{1}{2}$ per cent of metal.

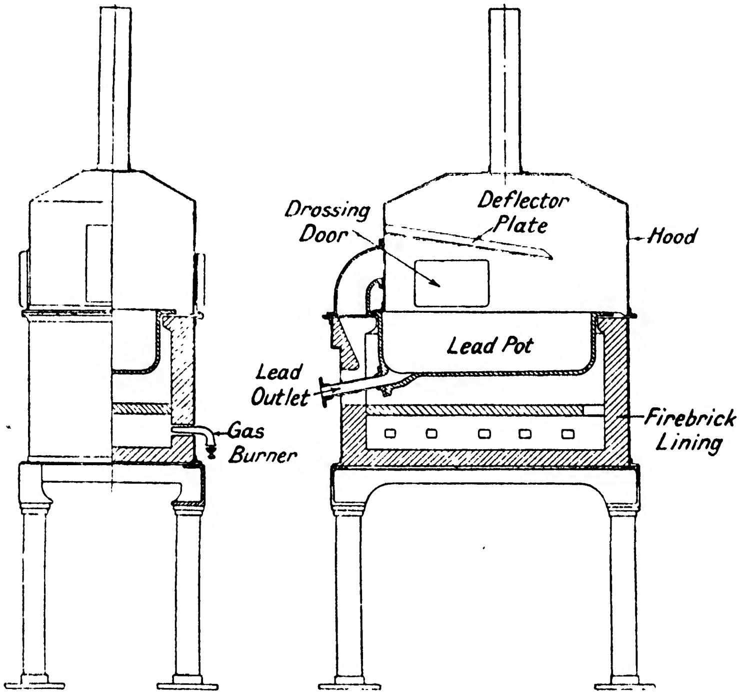

FIG. 32.—Sketch of an ordinary type of gas-fixed lead-melting furnace (Dunsheath).

It is natural to consider whether, if this mechanical transfer is prevented, oxide might not also be carried over in solution. In the absence of evidence for such solubility of oxygen in lead, this has been regarded as unlikely by most authorities, but the point has not been definitely settled. Recent work by Baker[10] has thrown some light on the question. He has determined the oxygen content of lead held molten for 15 minutes, while exposed to air at various temperatures and then chill cast. Samples heated at 400° C., 650° C., and 900° C. contained 0·006, 0·035, and 0·7 per cent of PbO respectively. While, therefore, a very considerable solubility is shown to exist at high temperatures, it would appear that the danger of contamination arising in this way is not serious at those used in good practice.

Reinitz and Wiseman[11] state that an improved product, resulting in a decrease in the number of cable faults, is obtained by pretreating the lead during melting with a sodium-lead alloy, so as to introduce 0·005–0·05 per cent of sodium. It is said that the products of the deoxidation reaction rise readily to the surface. They claim that a trace of sodium remaining in the solid sheath has no effect on the mechanical properties or on the corrosion resistance.

A representative example of one of the newer melting furnaces may well be considered in conjunction with some of the measures already briefly mentioned, so as to obtain a picture of a complete lay-out. A comprehensive system, described by Piercey[12], and adopted at the works of the General Electric Company of America, in which the lead is kept from contact with air from the time it is melted until it emerges from the press, will serve to show the care which is now given to extrusion in cable plants. The general arrangement is shown in Fig. 33. The melting furnace is divided into two chambers, both of which are heated by electric immersion heaters. In the first (1), which is open to the atmosphere, the pigs of lead are melted on a perforated grill and the dross and oxide rise to the surface while the liquid metal flows under a partition into the larger chamber (2), serving as a reservoir, where it is maintained under a neutral atmosphere. In this compartment a further opportunity occurs for entangled dross to separate so that clean lead flows into chamber (3). By raising the gas pressure in this unit, lead can be forced out, when required, through the filling spout into the container of the press. The total amount of metal held in the furnace system during operation is 22,000 lb. An atmosphere of nitrogen maintained in the pot spout prevents oxide being formed

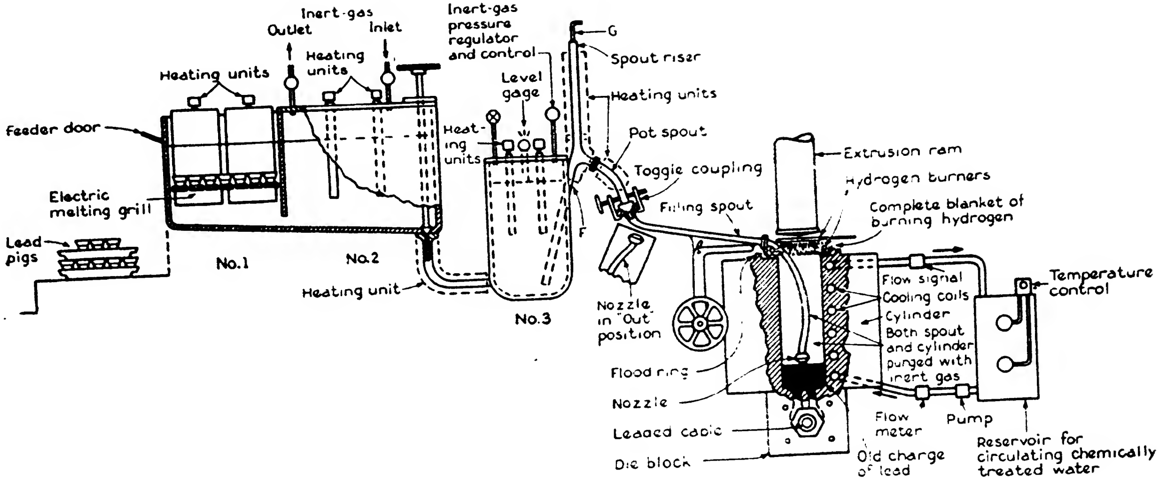

FIG. 33.—Complete sequence of melting and casting for the "nozzle-swirl" process.

(*Courtesy of "General Electric Review".*)

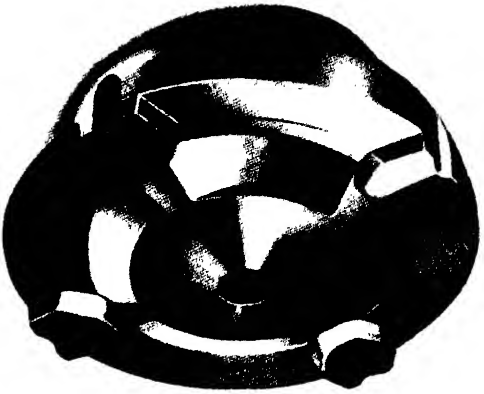

FIG. 34.—The nozzle used in the nozzle-swirl process.

(*Courtesy of "General Electric Review."*)

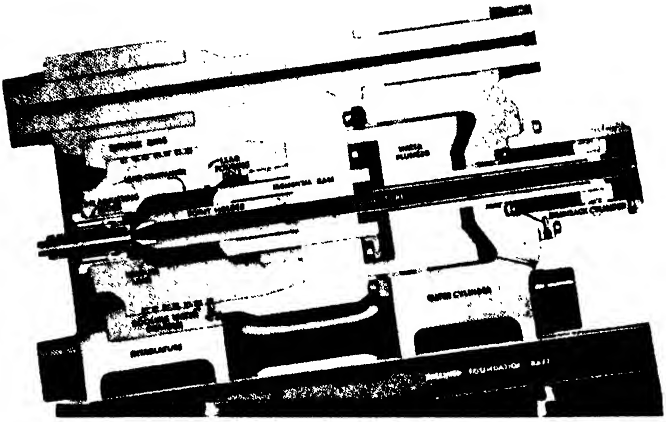

FIG. 38.—Section through the Judge cable press.

(*Courtesy of "The Engineer."*)

at the surface of the metal in the spout, and as a further precaution when the filling spout has been connected at the toggle joint, the whole supply line is swept out by gas, which purges it and the press container of air before the lead is pumped through. The filling spout, terminating in a nozzle (Fig. 34), provided with vanes to impart a swirling motion to the metal as it rises in the container, is lowered until it is just above the surface of the slug of the old charge so that the incoming hot metal washes across the latter, melting the surface and so removing the oxide layer. The swirling action, automatically controlled by the gas pressure in (3), Fig. 33, drives the relatively light impurities to the centre of the surface of the new charge, where they are removed by skimming or by overflowing 150 lb. of metal into a flood ring on top of the container. The diagrams, Figs. 35, 36, illustrate these points. The motion of the lead also causes the oxidized sleeve of lead, adhering to the walls of the container from the previous extrusion, to be melted off. During filling, a pan burner brought down over the top of the container maintains a blanket of burning hydrogen over the lead until it can be sealed from air by the extrusion ram. It is claimed that this combination of precautionary devices leads to a high degree of freedom from extrusion defects in the cable-sheathing made under the system.

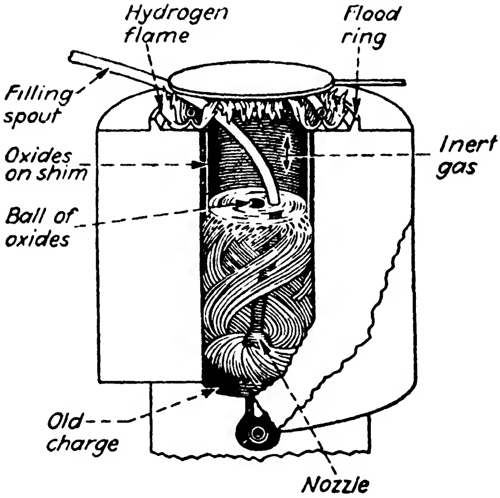

FIG. 35.—A vertical section of lead-press cylinder, showing swirl imparted to molten lead to free it of oxides and impurities.
(*Courtesy of "General Electric Review".*)

For the continuous extrusion machines referred to later in this chapter, no large reservoir of lead is required, and economy can be effected by melting it down at a rate corresponding to that at which it is being drawn off. Dunsheath's[13] design of a furnace for this purpose, for use with the Henley continuous extrusion machine, is

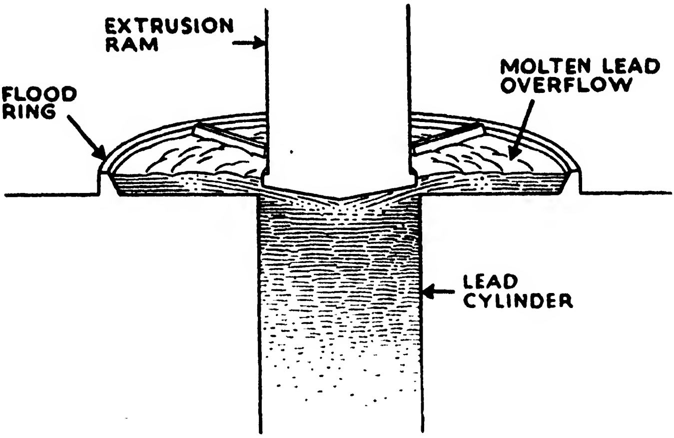

FIG. 36.—Diagram showing the flushing action of the tapered face of the ram in the cylinder of lead press.
(*Courtesy of " General Electric Review ".*)

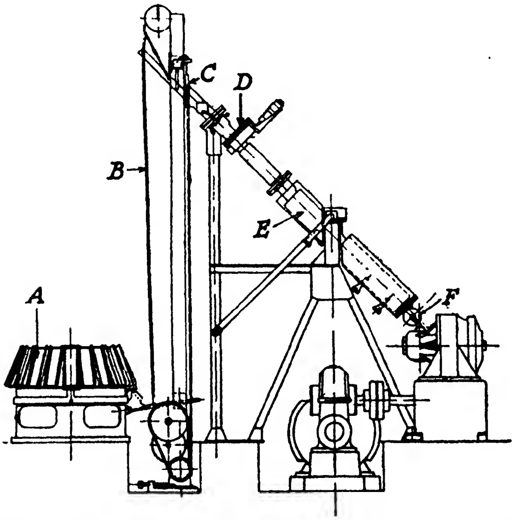

FIG. 37.—Lead-melting furnace for use with the Henley extrusion machine.
(*Courtesy of the Institute of Electrical Engineers.*)

shown in Fig. 37. It consists of a pig magazine (*a*), discharging into an elevator (*b*), which feeds the furnace. The latter in the form of a D-section tube set at 45°, is divided into three zones—an entrance lock between gas-tight doors (*c*) and (*d*); a melting zone (*e*); and a lower chamber controlled by a valve (*f*), containing molten lead at a thermostatically controlled temperature. The melting zone and lower chamber have independent gas or electric heating systems. An atmosphere of nitrogen is maintained in the furnace. In the sequence of operation, the withdrawal of lead from the furnace, by altering the level of the metal, operates a float which increases the heat supply at the melting zone, and speeds up the melting of pigs lying in the furnace tube. As each of these slides down it operates a trigger, causing the bottom door of the gas lock to open and allow the pig therein to slide down. As it does so, this in turn trips a switch which starts up the elevator motor, brings a fresh pig to the gas lock, and finally lowers the elevator cradle to pick up another pig from the magazine.

The Judge Press. There now remains to give a short account of some machines which have been designed to avoid some of the faults inherent in sheathing made in vertical hydraulic presses. One of these, in which the pressure is applied parallel to the direction of the cable, is the Judge press[14], seen in section in Fig. 38,* which appeared in 1924. The design recalls the earliest Borel press, but differs in using the "cast-in" method of charging. Its special feature is that, during extrusion, the lead, after flowing longitudinally, travels radially inwards over the point towards the die, and thus avoids the formation of a longitudinal weld seam such as is produced in the ordinary press. The container, set in the head of the press, is connected by tension bolts to the hydraulic cylinder. The die with its assembly is located in a screw block in the front end. The point-holder is screwed into the back of the container and has slots cut in its base through which a segmental extrusion ram passes, as shown in Fig. 39. Cable enters from the back via

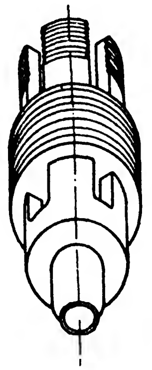

FIG. 39.—Showing the assembly of slotted point-holder and segmental ram.

---

* Facing page 41.

a guide tube passing through the main ram. The drawback cylinder for the ram is shown at the rear of the press. The latter is set on its foundation so that the front end is inclined down about 10° from the horizontal so as to permit the escape of air from the container while it is being filled. This is done by passing metal from a chute through an orifice in the back of the container which is uncovered when the ram is fully withdrawn. The level of the incoming lead rises against the face of the plug remaining from the last charge and finally overflows through the filling hole. Setting occurs under slight pressure from the ram. It is claimed that solidification in a closed container will reduce oxidation, but it is clear that care will be required to prevent entry of dross since it is more likely to become entrapped than in the open, upright type of container.

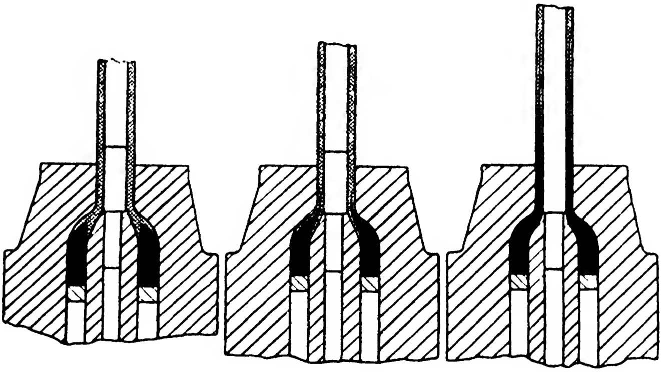

FIG. 40.—The junction between consecutive charges in the Judge press. (*Courtesy of " The Engineer."*)

Although the press makes seamless sheathing there still remains to be considered the effect of the oxidized surface between charges in the container. Actually it has been shown that, due to the differential flow in the die, the joint formed is not a sharp one, likely to cause radial weakness, but has the form of a vee-shaped weld, extending along the sheath for several feet, which is satisfactory from the point of strength. (See Fig. 40.)

It is interesting that lower extrusion pressures with a maximum of 12 tons per square inch, or of 15 tons per square inch for dilute alloys, are required with this press, on account of the simpler course of deformation and reduced friction losses in the metal. The production capacity of a 2800-ton unit, taking a charge of 1000 lb of lead, is about 2 tons an hour.

Continuous Extrusion Machines. The idea of making pipes, and of covering cables with lead by a continuous process has long been attractive. Its appeal is increased by the possibility that it offers of obviating defects inherent in the ordinary hydraulic method, arising from the intermittent nature of its operation. A number of patents have been filed in which a container is fed continuously with liquid lead under pressure by a set of reciprocating pumps, but these, and a number of ingenious variants of the method, do not appear to have progressed beyond the experimental stage. A design[15] put forward in 1906, however, in which a rotating screw was employed to carry lead forward through a cylinder to a die, though unsuccessful at the time, can be regarded as the forerunner of the two continuous methods of extrusion independently developed in England, which have now been in commercial operation for several years. The first continuous machine to extrude lead pipe successfully was the Henley Telegraph Works Company machine, developed by Dunsheath[16] as the outcome of small-scale experiments started in 1929. The machine is shown in diagrammatic section in Fig. 41. Its principal features are as follows: a point-holder (*h*), having a helical ridge on its outer surface, is screwed into the back cover of the machine, while the point which it carries is just entered into the die ring (*k*) held in the front cover. The point-holder, itself stationary, lies within a rotating sleeve called the driver (*i*), which has on its bore a helical ridge in the opposite sense to that on the former, so that the two sets of threadlike ridges do not engage like the threads of a nut and bolt but are in contact only at their peripheral surfaces. A flange on the enlarged end of the driver carries one race of a thrust bearing; the other being on the main frame. Keyed to the flange is a spur wheel forming the final member of a train of driving gears, the torque applied being balanced by providing a driving pinion on either side of the spur wheel. Power is derived from an electric motor through the reducing gears. During operation molten lead is admitted continuously to the chamber (*b*), and flows into the spaces between the ridges on the driver and point-holder, where it is cooled by an external water spray to a pasty condition, and in a short distance, solidified. Due to rotation of the driver about the point-holder, the reaction of the two threads on the solid metal causes it to travel forward to the forming chamber (*j*), into which it is delivered uniformly by turning out the ridges to act as spill-ways. The formation of a homogeneous stream of metal, and the avoidance of obstructions in the chamber is necessary to avoid "layering" of the lead. The pressure developed in the forming chamber suffices to extrude the lead through the die, so that it passes out as a sheath on the conductor lying through the point-holder, and in doing so draws the conductor forward through the machine. The problem of preventing leakage of lead past the glands on the ends of the driver has been neatly overcome by cutting threads on the bearings of such

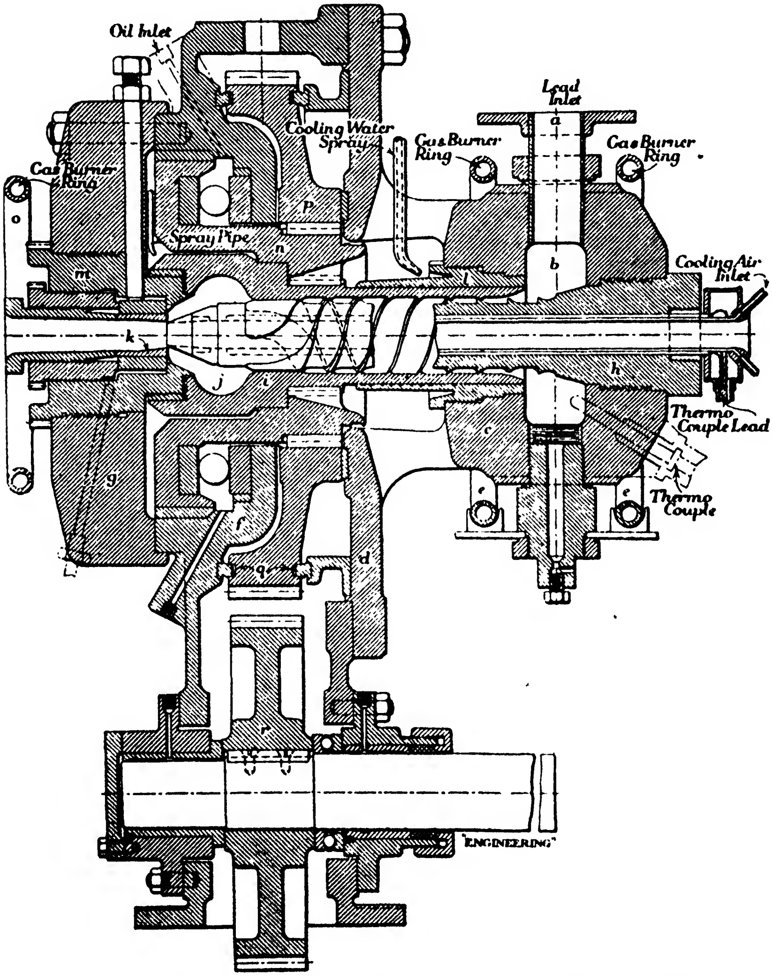

FIG. 41.—Diagram of the Henley continuous extrusion machine.

rotation that lead which enters is forced back. Very careful adjustment of the temperatures to suit the running of the machine appears to be necessary; lead entering at the intake at approximately 400° C. from a thermostatically controlled furnace is kept hot by a gas ring, and heating is also provided at the front cover to maintain the die temperature close to 200° C., as measured by thermocouples suitably disposed. In the production of a length of cable the machine is kept in continuous motion, usually at a steady speed rather below the maximum of 38 R.P.M., being slowed down temporarily while a coiling drum already filled is replaced. The die position can be altered laterally by four screws on the front cover, and moved in or out by the adjusting nut (*m*). The change over to a different size of cable is made, without emptying the machine, by withdrawing the die nut, and trepanning out the lead in the forming chamber to

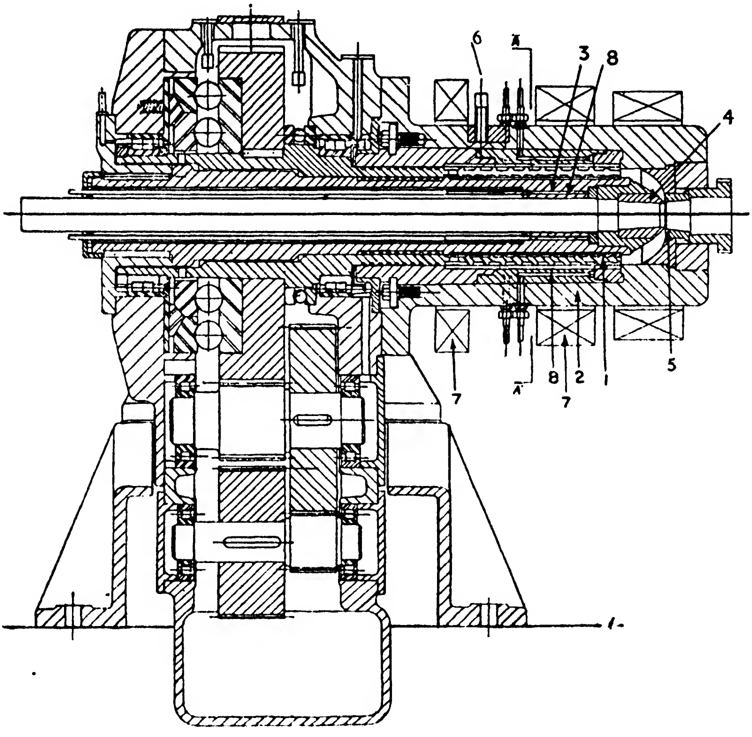

FIG. 42.—Section through Pirelli continuous extrusion machine for sheathing cables.

1. Impelling cylinder.
2. Barrel-shaped outer casing.
3. Point-holder.
4. Point.
5. Die ring.
6. Port for entry of lead.
7. Induction heating coils.
8. Cooling water channels.

allow the point to be pushed out through the die opening in the cover, whereupon a replacement die and point can be fitted.

The machine developed by the Pirelli-General Cable Co. operates in a generally similar manner, but differs in that the impelling member, of cylindrical form (1) (Fig. 42), with overhung drive, rotates in a barrel-shaped casing (2), and is furnished with external as well as internal screw threads. The inside of the casing and the stationary point-holder (3), which lies concentrically in the impeller, have longitudinal grooves which serve to key the lead against the rotating action of the impeller screws. Molten lead admitted at (6) has access to both inner and outer sides of the impeller, so that a double extrusion stream is delivered into the forming chamber. Maintenance of the correct temperatures at different points is achieved in this case by induction heating coils (7) around the casing at the inlet and towards the die end, with intermediate cooling channels (8) to freeze the lead in the threads. A layout for three of these units is shown in Fig. 43.

Both machines were in commercial production just prior to the War, which has, however, interfered to some extent with their development. As an example of their output, a Henley machine for cables of 3 in. diameter, driven by a 70-H.P. motor, will deliver rather less than 2 tons an hour. The chief claims made for continuous machines may be summarized as follows:

(*a*) Since they have not to be opened up for recharging, the metal is not exposed to oxidation.

(*b*) No longitudinal weld seam, and no stop marks are produced on the sheath.

(*c*) Exactness of temperature control giving close dimensions and uniform properties.

(*d*) The economic merit of continuous operation.

Although substantial tonnages of lead have been handled in these machines, there can scarcely be said to be available as yet a concensus of opinion as to whether their product is substantially better than that from the older presses, and it is perhaps a little uncertain whether they are easy to maintain in satisfactory operation and can be rapidly settled down to work on different sizes of cable. It is perhaps inevitable that so revolutionary a departure from well-established procedure should be received with caution, but the fact that engineering problems of considerable difficulty in reaching a practicable design have already been so successfully overcome, augers well for the future of the continuous method in the field of lead and the usual pipe and cable alloys.

Lead Slug Extrusion. When one considers the methods of extrusion as applied to different groups of metals and alloys, it is perhaps a little surprising that lead should be exceptional in that the practice of casting and freezing the charge in the container rather than the use of precast billets should be that almost invariably adopted, though it is obvious that a special reason exists where cables have to be sheathed in long lengths. In spite of the large increase in production which could be achieved by the use of billets, owing to the elimination of the setting period, it is only employed in a few instances where the quality of the product is of little importance. The reason put forward in the lead industry for this is that defects occur with greater frequency and are more difficult to avoid when billets are used. Experience in connection with the harder metals, for which the use of liquid charging was soon abandoned, has, of course, been the contrary of this. Fig. 44 shows a press of the kind used in the cable-making industry applied to the covering of rubber hose with a sheathing of lead in which it is then vulcanized and the lead is afterwards stripped off to be used again. The billets or slugs, weighing approximately half a ton, are preheated to about 100° C., and are extruded with the container and die-block heated to 180° C.

Alloys for Cable Sheathing. The earliest cables were sheathed exclusively with lead, and while this continues to be widely used, an increased measure of protection has been obtained in some directions from the substitution of lead alloys. Apart from the essential requirements that a sheathing material should be easy to extrude at economically high speeds, and should have a high degree of immunity from corrosion, a combination of other properties is required in varying degree, such as pliability for purposes of coiling and uncoiling, and handling during installation; tensile strength and hardness; and resistance to fatigue and creep. The relative importance of these depends on the class of cable, the method by which it is installed, and the special conditions to which it is exposed during working. A particular trouble experienced with overhead cables, and those laid in proximity to railways, pinned to bridge structures, and those used in ship's wiring systems, is that of intergranular cracking of the sheath. One reason for this has been made evident by the work of Haehnel[17], Beckinsale and Waterhouse[18], and others, who have shown that lead is susceptible to failure under very low fatigue stresses such as may easily arise in service as the result of vibration, expansion and contraction caused by temperature changes, and by wind pressure. The liability of lead and its alloys to deform continuously, or "creep", under prolonged loading is another matter which is receiving much consideration and is now influencing the selection of sheathing material. Very pure lead, as Greenwood[19] and his collaborators have shown, has an extremely poor resistance to creep, but impurities, even in the small amounts present in commercial grades of lead, have a marked effect in diminishing the rate of creep. Thus, a specially prepared lead with a total of 0·0005 per cent of impurities broke under a load of 500 lb. per square inch after 25 days; while a commercially pure lead withstood the same load for 500 days before failure. The addition of as little as 0·01 per cent of silver, or 0·06 per cent of copper, confer much improved properties in this respect. By suitable alloying both the fatigue limit and the creep resistance can be raised considerably, and a wide range of compositions has been proposed, and in some cases adopted, for cable purposes as the result of the close investigation which this subject has received in all countries in recent years[20, 21, 22]. The fatigue properties of relevant alloys are given in Table 1:

TABLE 1

Material	Fatigue Limit Tons per square inch	Authority
Lead	± 0·18	Beckinsale and Waterhouse
3 per cent Sn alloy	± 0·54	,, ,,
1 per cent Sb alloy	± 0·65	,, ,,
0·5 per cent Sb; 0·25 per cent Cd alloy	± 0·74	,, ,,
1·5 per cent Sn; 0·25 per cent Cd alloy	± 0·57	,, ,,
0·04 per cent Ca alloy . . .	± 0·54–0·67	Dean and Ryjord[23]
0·06 per cent Cu alloy . . .	± 0·28	Russell[24]
0·05 per cent Te alloy . . .	± 0·50	Singleton and Jones[25]

The discordancy which exists between observations of the creep strength makes it impossible to give comparative figures for the various materials in this respect. The phenomenon of creep is complex and divergences between research results are probably due to the fact that influences other than composition, such as grain-size, the magnitude of the loads, and work-hardening effects are involved.

Aerial cables are especially subject to heavy stresses, and it was in connection with these that lead hardened by alloy additions was first introduced, particularly for overhead telephone cables. To begin with, the alloys adopted contained 1 to 3 per cent of tin; these continue to be used extensively for small cables for house wiring, but on account of the high cost of tin, and the quantity which would be involved, this metal has been replaced by antimony in amounts between 0·75 and 1 per cent. The latter alloy, adopted in 1912 by the Bell Telephone System, and now often made with the further addition of 0·06 per cent of copper, has become the standard for telephone cables in the U.S.A. In England, the alloy with 0·85 per cent antimony is also favoured to some extent. Antimony contents above 1 per cent are more or less excluded on the score of cost and difficulty in extrusion.

Cables which are laid underground in ducts or trenches, such as the majority of power cables, have to fulfil rather different requirements which are in most cases satisfactorily met by the use of unalloyed lead. The A.S.T.M. specification for metal for this purpose fixes a lead content of not less than 99·85 per cent. However, the advantages of some degree of alloying in reducing the number of breakdowns is now generally recognized, especially since the advent of oil-filled high-tension cables working under internal pressure.

Where only a moderate improvement in the properties will suffice, the amount of the alloying addition can be limited. For example, 0·25 per cent of antimony is sometimes present in power cables. The ternary alloys developed by the B.N.F.M.R.A., two of which are given in Table 1, and another with the composition 0·4 per cent tin, 0·15 per cent cadmium, have found some applications as sheathing alloys, having been used in England by the Admiralty for ship's cables, and by the G.P.O. for telephone cables.

A point of importance in connection with the antimonial lead is its tendency to age-harden following rapid cooling. This arises from the change with temperature in the solid solubility of antimony in lead, which falls from a maximum of 2·45 per cent at 228° C. to

0·5 per cent at the ordinary temperature. Full hardness is not developed on standing after manufacture for several months, after which it slowly falls off, due to the agglomeration of the precipitated antimony particles. Where the hardening is regarded as undesirable, the cable is frequently blanketed as it leaves the press so as to diminish the rate of cooling instead of being passed through a water trough, as is normally done with cables to protect the core and to avoid flattening and adherence of the turns when it is coiled on the drum. Cooling by the use of steam is sometimes considered a satisfactory alternative in order to reduce age-hardening, but tests made by Chaston[26] indicate that this is not very effective. He gives figures to show that even on cooling in air from 250° C. the Brinell hardness of an alloy containing 1 per cent antimony, 0·06 per cent copper, increases on ageing from 6 to 10, as compared with a final value of 12 obtained as the result of quenching in water.

An alloy recently introduced, but which bids fair to become a serious competitor to the antimonial leads, is one made up with 0·03–0·04 per cent of calcium. This is also an age-hardening alloy, a property which it owes to the precipitation of the compound Pb_3Ca. In this case, however, the induced hardness does not fall away with time. Dean and Ryjord[27] claim that it is slightly stronger than the former in tensile and fatigue strength, while it is also favourably reported upon in regard to creep. The calcium, as Pb_3Ca, does not impair the corrosion resistance.

The alloy with tellurium mentioned in the above Table, though possessing remarkable properties in other respects, is unfortunately more susceptible to creep than most grades of commercial lead.

Pressure and Speed for Extrusion. Higher pressures are necessary to extrude most of the lead alloys than are used for lead, and this frequently makes it essential to reduce the diameter of the container, consequently decreasing the length of cable covered at each operation. The following figures obtained by Pearson and Smythe[28] exemplify this point:

Alloy	Increase in Extrusion Pressure at 240° C. as a Percentage of that for Lead
0·8 per cent. Sb	56
0·15 per cent Cd, 0·4 per cent Sn	59
0 25 per cent Cd, 0·5 per cent Sb	75

For the copper-bearing alloy, the increase in pressure is of the order of 10 per cent only.

When metals are worked at temperatures approaching their melting-points, failure readily occurs by reason of the low intergranular cohesion which then obtains. At high speeds of extrusion, temperatures considerably in excess of the nominal are built up, due to friction within the metal and at the surface of the die, which may reach the danger-point locally, giving rise to the appearance of circumferential or spiral cracks on the surface of the sheathing. This " checking " is infrequent in lead sheaths in which it occurs only if the temperature comes within 2° C. of the melting-point, and a considerable latitude is thus possible in respect of the extrusion speed, the maximum to which is generally only limited by the delivery rate of the hydraulic pump. Much greater care is required with some of the alloys, in which liquefaction begins at lower temperatures. In the case of the 1 per cent antimony alloy, for example, the top of the safe range is about 290° C., and it is necessary to regulate the speed of extrusion to suit the material and the size of section which is being produced.

The Sheathing of Cables with Aluminium. The likelihood that any other metallic material would be found to replace lead for the protection of cables had hardly been envisaged until recently, but the economic policy adopted in Germany, in the years preceding the war, of substituting metals derived from domestic raw materials for those of external origin, has led to an examination being made of this problem. The qualities which lead possesses, which may be broadly summarized under the headings of ease of extrusion at temperatures which do not harm the cable insulation, pliability in handling, and ability to resist corrosion, are difficult to find in combination in any substitute. On the other hand, the relative weakness of lead and even of the best of its alloys so far developed is such that in providing sheaths of thickness to withstand the stresses imposed in oil-filled and in marine cables, the weight of lead used may, in extreme cases, be as high as 80 per cent of the cable as a whole, and runs in ordinary cases between 30 and 50 per cent.

The metal regarded as most likely is aluminium, and this is especially the case since the advent, in 1936, of high purity metal (99·99 per cent) in commercial quantities. A comparison of some of its properties with those of lead and the 1 per cent antimony alloy, given in Table 2, is taken from a survey made by Czempiel and Haase[29]. The specific weight of aluminium (2·7) is only a quarter of that of lead (11·3), and even if the wall thickness of the sheath is unchanged, an economy results which would help to offset the higher price of the former. Aluminium also shows up favourably in respect of its behaviour towards fatigue and creep, and in the fact that it is not prone to grain-growth, like lead, at the temperatures and under the stresses engendered in service. A major question to be decided is whether it can be satisfactorily extruded over a cable. Czempiel and Haase claim some success in trials made in an ordinary vertical cable press, which had been adapted by fitting a container of smaller bore to increase the extrusion pressure. They used the "cast-in" method for charging, and say that the weld between successive charges was satisfactory. The extrusion pressure for metal of 99·99 purity at the temperature found to be necessary, 350°–400° C., was double that for lead. Some charring of the paper insulation was noted in the cable where it lay in the die-block during the stop for refilling. Hauff, Hosse and Deisinger[30] at the Siemens works, have also experimented with a 2000-ton vertical cable press, finding an extrusion temperature of at least 280° C. to be needed, and experiencing some difficulty due to the attack of the molten metal on the container. They used, in addition, a horizontal press of the type used for copper alloys in which precast billets were charged into the press in succession when

TABLE 2

	Lead	Lead with 1 per cent of Antimony	Aluminium 99·99 per cent
Hardness H_B	3·5	6·5	14·0
Yield-point, tons per square inch .	—	—	0·9
Maximum stress, tons per square inch	0·9	1·6	2·3–3·0
Elongation, per cent	55	36	40–50
Fatigue limit, tons per square inch .	± 0·28	± 0·56	± 1·5
Resistance to creep, tons per square inch (0·1 per cent extension per year)	0·04–0·06	0·06–0·13	0·5

the preceding one had been extruded to half length; a bridge die being used, in order to see whether a continuous length of tube could be produced. The probability of obtaining a good weld between the billets in this way can scarcely be regarded with enthusiasm, especially with aluminium, but they state that fault-free tube, in which the longitudinal seams due to the bridge die could only be revealed by deep etching, were made at 400° C. Further developments in sheathing cables with aluminium are believed to have taken place in Germany since 1939. It seems probable that with a specially designed press, and with the possible adoption of insulating material, such as asbestos or glass yarn, the technical problems would not be insuperable.

REFERENCES

[1] *Bell System Technical Journal*, 1936, **15**, 603.

[2] P. Dunsheath. The Continuous Extrusion of Lead Cable Sheathing. *J. Inst. Elec. Eng.*, 1937, **80**, 353–67.

[3] H. A. Tunstall and P. Dunsheath. The Physical Properties of Lead Cable Sheaths. *J. Inst. Elec. Eng.*, 1928, **66**, 280–9.

[4] W. H. Bassett and C. J. Schneider. The Occurrence of Irregularities in Lead Cable Sheathing and their Relation to Failures. *Trans. Amer. Inst. Min. & Met. Eng.*, 1933, **104**, 254–71.

[5] R. W. Atkinson. *Wire and Wire Products*, Dec. 1936, 695–704.

[6] F. v. Göler and E. Schmid. Flow Phenomena in the Extrusion of Cable Sheaths. *Z. für Metallkunde*, 1939, **31**, (3), 61–8.

[7] *J. Inst. Elec. Eng.*, 1937, **80**, 371.

[8] L. Zickerick. *Elec. World*, Jan. 19, 1935, 30–1.

[9] R. W. Atkinson. *Ibid.*

[10] W. A. Baker. Estimation of Oxygen in Metals. *J. Inst. Metals*, 1939, **65**, 345–53.

[11] B. B. Reinitz and R. J. Wiseman. *Elec. Eng.*, 1940, **59**, 165–70.

[12] C. A. Piercey. The Nozzle Swirl Process. *Gen. Elec. Rev.*, 1940, **43**, 489–91.

[13] P. Dunsheath. *Ibid.*

[14] The Straight-Through Press for Lead-Sheathing Cables. *Engineering*, 1931, **131**, 568–70.

[15] Brit. Pat. No. 12,265 (1904).

[16] P. Dunsheath. *Ibid.*

[17] O. Haehnel. On the Origin of Splits in Cable Sheathing and Other Sheathing Defects. *Telegr- und Fernsprech-Technik*, 1935, **24**, 179–82.

[18] S. Beckinsale and H. Waterhouse. The Deterioration of Lead Cable Sheathing by Cracking, and its Prevention. *J. Inst. Metals*, 1928, **39**, 375–406.

[19] J. N. Greenwood and H. K. Worner. Types of Creep Curves Obtained with Lead and its Dilute Alloys. *J. Inst. Metals*, 1939, **64**, 135–58.

[20] H. F. Moore and N. J. Alleman. The Creep of Lead and Lead Alloys used for Cable Making. *Univ. of Illinois Eng. Exptl. Sta. Bull.*, No. 243, 1932.

[21] H. F. Moore, B. B. Betty and C. W. Dollins. Creep and Fracture of Lead and Lead Alloys. *Univ. of Illinois Eng. Exptl. Sta. Bull.*, No. 272, 1935.

[22] J. McKeown. The Creep of Lead and Lead Alloys. *J. Inst. Metals*, 1937, **60**, 201–22.

[23] R. S. Dean and J. E. Ryjord. Alloys for Cable Sheathing. *Metals and Alloys*, 1930, **1**, (9), 410–16.

[24] R. S. Russell. The Properties and Uses of Lead. *Met. Ind. (London)*, 1936, **48**, 585–90.

[25] W. Singleton and B. Jones. Some Effects of the Addition of Tellurium to Lead. *J. Inst. Metals*, 1933, **51**, 71–80.

[26] J. C. Chaston. The Properties of Lead and Lead Alloys for Cable Sheathing. *Elec. Communications*, 1934, **13**, (1), 31–50.

[27] R. S. Dean and J. E. Ryjord. *Ibid.*

[28] C. E. Pearson and J. A. Smythe. *Brit. Non-Ferr. Met. Res. Assocn. Report*, No. 18, 1931.

[29] A. Czempiel and C. Haase. On the Question of Using Aluminium as a Cable Sheathing Material. *Aluminium*, 1937, **7**, 521–8.

[30] F. Hauff, G. Hosse and W. Deisinger. Aluminium as a Material for Cable Sheathing. *Siemens-Zeitschrift*, 1939, **19**, 357–68.

CHAPTER IV

EQUIPMENT FOR THE HOT EXTRUSION OF HARD METALS

In tracing the historical development of extrusion in Chapter I, it was not taken beyond the point at which, at the beginning of the present century, its employment for copper alloys had been successfully accomplished. This can be regarded as the turning-point in the wider application of the process. It would serve no useful purpose to follow chronologically the subsequent stages in progress which have been made, and it need only be said that these have not involved any radical departure in the principles employed, but have come about almost entirely as a consequence of continuous progress in the design of hydraulic presses and the elaboration of suitable adjunctive gear. There is given below a summary of the principal features which contribute to the improved performance of present-day presses: (*a*) an increase in size and total power; (*b*) the incorporation of hydraulic and mechanical auxiliaries for such purposes as conveying billets, manipulating and locking the die assembly, cutting off the extrusion and separating the discard, etc., which have increased the speed of operation; (*c*) the introduction of better hydraulic systems, now chiefly embodying accumulators of the pneumatic type, which with improved valves, pumps, and regulators available, ensure the smooth delivery and control of large volumes of high-pressure water; (*d*) the satisfactory solution of the problem of successively piercing and extruding solid billets for the production of tubes and hollow sections by the inclusion of hydraulic piercing equipment operating independently of the main cylinder; (*e*) methods of construction designed to preserve the co-axial alignment of the working parts, and simple adjustment for taking up wear, contributing greatly in ameliorating eccentricity in tube manufacture; (*f*) the evolution of steels suitable for the onerous conditions of heat and stress combined with abrasion under which such members as mandrels and dies operate.

Horizontal and Vertical Presses. For general purposes the horizontal press is the one principally used; those giving a ram pressure between 1000 and 1500 tons being of chief utility for most of the work on copper alloys. In the brass industry it has been usual in some quarters to differentiate between presses for making rod and those intended especially for forming tubes; those for the former being of simpler construction and lower precision. This distinction has lasted longest in the U.S.A., where the practice has also been conditioned by the fact that it was until recently rare for rod presses there to be operated off an accumulator, and hence the somewhat low rate of extrusion set by the delivery of the pumps makes them, in any case, unsuitable for tube-making. In England, due to the more general use of accumulators, adaptation for extruding hollow products has usually been possible, and the separation of function is more infrequent. At the present time, the universal type of horizontal press, fully equipped for piercing, with safeguards in its design to secure and retain good accuracy, has been generally accepted as the best solution where a programme which includes a multiplicity of fabricated forms has to be covered. For the general run of copper alloys, a press similar to that shown in Fig. 45 of 1500 tons, capable of working at ram speeds up to 8 in. per second, and with means where necessary of heating the container, has been found satisfactory. For dealing with billets up to 8 in. in diameter in the more refractory alloys, a number of units of 2500 tons, and occasional more powerful ones, have recently been installed, but it does not appear that there would be much purpose at present in proposing, for copper alloys, presses of 5000 tons in rating or more, such as have become necessary for high-tensile aluminium alloys. For the latter, the tendency in recent years, both on account of their relative difficulty in extrusion, and in order to provide the sections in the overall sizes and lengths in which they are required, has been to put in powerful presses ranging from 3000 to 6000 tons, the largest of these being capable of handling billets up to 20 in. in diameter. Owing to the difficulty in piercing these alloys satisfactorily such presses are usually of the non-piercing type. Even so, for extruding tubes from hollow billets the mandrel may be made to retract inside the extrusion ram for the sake of additional compactness in press design and, by reducing the length of stroke needed for the main ram, so give facility in charging billets into the container.

For certain purposes, such as the production of small diameter

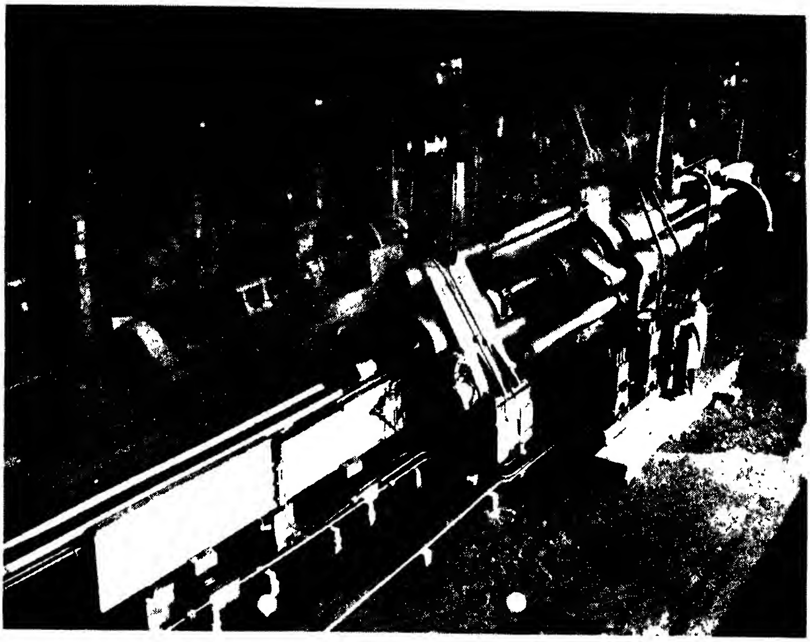

FIG. 45.—Fielding and Platt press for 1500 tons for general purposes.

FIG. 48.—Die-head withdrawn from press. Saw swinging in to sever discard from extruded tube.

(*Courtesy of Reynolds Tube Co.*)

[*Facing page* 58.

tubes with thin walls, like those used for condensers, etc., many manufacturers prefer presses of the vertical type to those which work in the horizontal position. The advantages claimed for them are: (*a*) it is somewhat easier to secure alignment of the press tools, and to assure an even flow of the metal into the die, so that tolerances in dimensions are more readily adhered to; (*b*) a high speed of operation; throughputs of 70 small billets an hour can be attained; (*c*) the presses occupy less floor space in the factory. On the other hand, they must be erected on a platform, or over a pit into which the tube or other section passes down a curved chute on to the cooling bench, and a further limitation is set by their weight and the amount of headroom which they require, with the result that the majority of those in operation are from 600 to 1000 tons in capacity, and only exceptionally are units of greater power than 1500 tons installed.

Although hydraulically operated presses are generally to be preferred for the majority of extrusion work, there are some purposes for which mechanically driven presses find application in connection with hot extrusion. They are sometimes used, for instance, in the manufacture of small tubes, and are in common use for operations of a semi-forging nature such as are involved in the fabrication of articles like poppet valves in steel. The units for these purposes are usually of small size, from 400 to 600 tons pressure capacity, though in a recent development use has been made of very heavy presses in making steel tubes. Further reference to this is made in Chapter X. While they permit a high rate of production to be achieved, mechanical presses lack the precision in control which is so important a feature of hydraulic working.

Presses for Inverted Extrusion. The inverted process has been in use since 1870 in almost all lead-pipe presses. A premature proposal to use it for the extrusion of steel billets was made in 1893,* and a design embodying it was also put forward by Dick, who patented the idea of extruding simultaneously through dies placed at both ends of the container. The practical development of inverted extrusion of brass and other metals did not come about until after 1926, when it had been shown by Genders that, owing to the manner in which flow of the metal occurred in this process, the

---

* U.S. Patent 498,304.

well-known extrusion defect met with in material made by direct extrusion, could be avoided, and that, moreover, lower extrusion pressures were required. These points are referred to later, and it will suffice at present to say that although the inverted method has aroused much interest, it has not made the headway which was at one time anticipated. There are, it is true, instances of its successful employment, but in the main, where dual-purpose presses have been installed, the direct method of working is the one preferred. Among the main drawbacks are that the size of section which can be made is necessarily limited by the need to avoid undue weakening of the hollow die stand, and the difficulty, when multiple-hole dies are used, of preventing the extruded rods becoming twisted and entangled inside the die-stand.

Horizontal Presses for Direct Extrusion. A typical arrangement for the production of rods or solid sections is shown in the diagrams in Fig. 46. It comprises the container (1), consisting of a heavy steel shell, fitted with alloy steel liners; the extrusion ram (2), in front of which is placed a pressure disc, or follower pad (3), fitting the container more closely than the ram; the die assembly (4), locked against the container during working by the wedge (5). The die assembly is made up of several parts. For most sections the actual die is in the form of a plate insert (*a*), fitting in a recess in the face of a die-holder (*b*), which is in turn supported by a bolster (*c*), held in the die-head (*d*). A conical seating between the die-holder and the container centres the die and prevents escape of metal. A normal sequence of operations

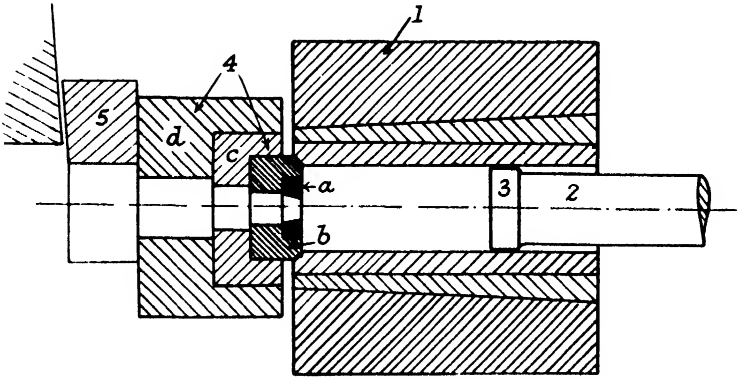

FIG. 46.

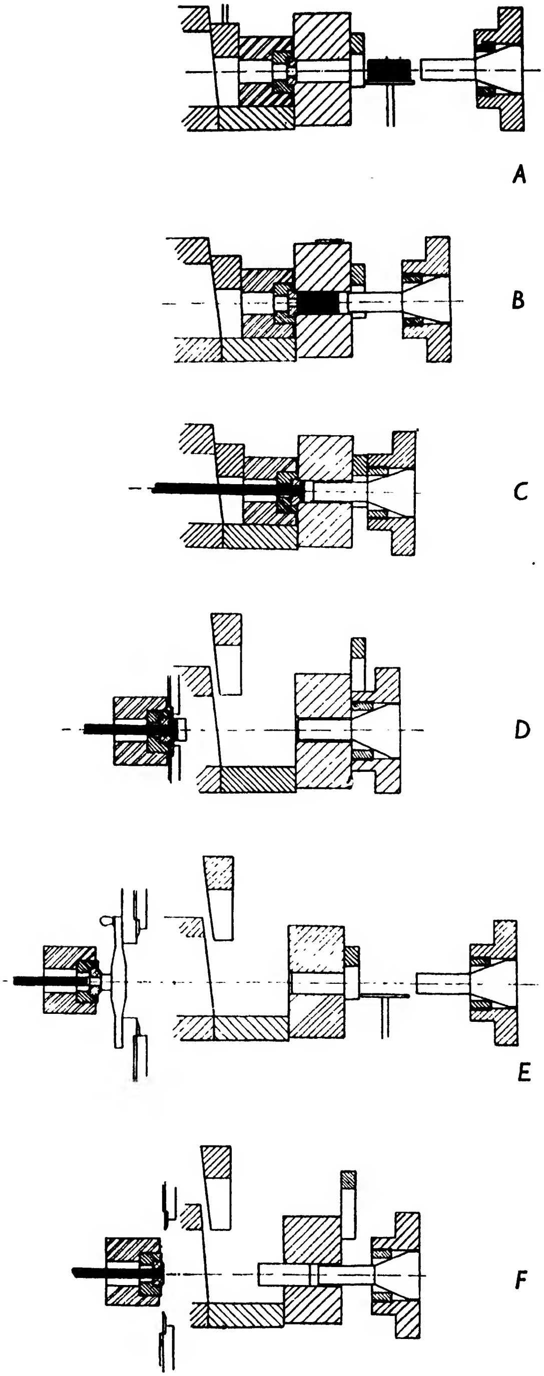

FIG. 47.

may now be followed by reference to Fig. 47. With the ram in the retracted position as shown in (*A*), a hot billet is brought to the cradle in front of the container and, (*B*) is pushed in by the ram, working for this and for other idle strokes on a low-pressure storage cylinder. (*C*) The pressure disc having been inserted, the ram is advanced to upset and then extrude the billet, the latter being effected under pressure from the accumulator. The billet is never completely extruded. Even were it desirable to do this, it is impossible to exert sufficient pressure to eliminate the thin final disc. As will be seen later, the press is stopped in practice for other reasons when a short stub of the billet, referred to as the discard, remains in the container. (*D*) The wedge having been raised, the ram is advanced further to push out the discard and is then retracted. By means of the hydraulic reciprocating gear attached to the die-head, it is moved clear of the press-head to a position where a pair of shears, or a motor-driven circular saw swinging in on an arm, severs the extruded length from the discard close behind the die (see Fig. 48).* (*E*) The die-head is now moved back against a small ejection mandrel swung in to dislodge the end of the extruded bar from the die, allowing it to be passed down the runway to the cooling bench to be roughly straightened by hand while it is still hot. (*F*) The final step is to dislodge the thin sleeve or shell of metal which is, in most forms of practice, left on the wall of the container as the result of the clearance purposely provided between the pressure disc and the container. The sleeve may come away with the discard, or it may, as shown, have to be ejected, using a close-fitting clearing disc, by a further stroke of the ram.

The Extrusion of Tubes. Before the advent of hot extrusion, tubes in brass and such other metals as it was possible to hot work were chiefly made by Mannesmann rolling, the thick shells so produced being later drawn down to the sizes required. Alloys such as cupro-nickel, to which this was inapplicable, were made into tubes by the tedious and expensive method of cold drawing from hollow-cast or bored billets. When the extrusion of brass was achieved, its use for tube making was at first mainly confined to the forming of thick-walled blanks, on which a good deal of cold drawing was still needed, on account of their poor concentricity. With the presses and tool steels now available, the direct production

---

* Facing page 58.

of fine tubes down to $\frac{1}{16}$ in. wall thickness, needing little cold finishing, has been rendered possible, even in alloys which are stiff to extrude.

The production of tubes now constitutes an important branch of extrusion. As has been seen already, the essential arrangement requires that a mandrel, passed axially through the billet, should be located with its tip lying in the aperture of the die so as to form an annular space through which, when pressure is brought to bear on the hot billet by the extrusion ram, the metal is forced out in the form of a tube, the wall thickness of which depends on the difference in the diameters of the die aperture and the mandrel.

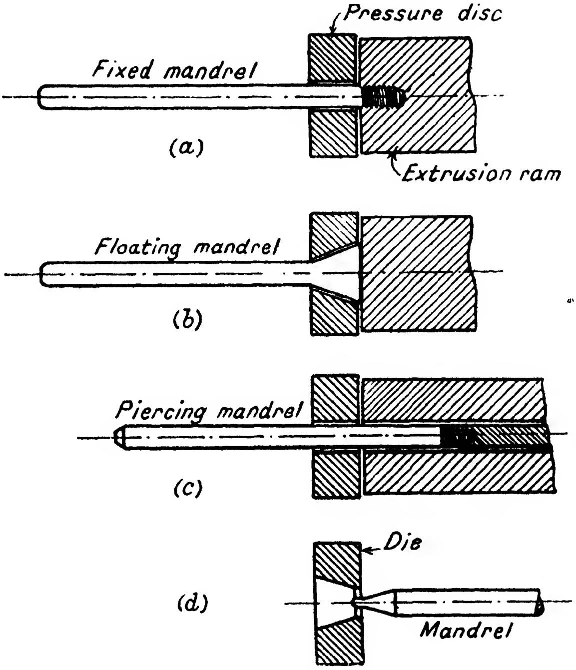

FIG. 49.—Types of mandrel for the extrusion of tubes.

There are several ways in which the press tools may be arranged for this purpose. (1) A slightly tapered mandrel is attached either rigidly as at Fig. 49 (*a*), or in a way that gives it some freedom of movement, to the end of the extrusion ram. As the latter is moved forward, the mandrel passes through a hollow-cast billet, or one in which a central hole has been preformed, and enters the die before the ram puts pressure on the metal. (2) Alternatively, the mandrel may be made a floating member which is left free to centre itself in the die. To prevent it from being pulled through the die by the faster flowing metal it is enlarged at the base which may be made conical in shape, engaging behind the pressure disc, as shown in Fig. 49 (*b*). In both the above cases the mandrel moves forward with the extrusion ram and projects increasingly through the die inside the tube.

Of the two, the floating type can be regarded as the better in point of accuracy in wall thickness, concentricity within 1 per cent being obtainable when accurately bored billets are used, since if flow in the billet is evenly distributed, as it should be if the metal is in a uniformly plastic condition, the mandrel will undoubtedly tend to centre itself, whereas an attempt to fix the position of the mandrel will, if flow should for any reason be uneven, not only fail to give concentric tube, but is likely to cause the mandrel to bend or break. A means occasionally used to centre the loose mandrel to begin with, while the billet is being upset, is to insert a close-fitting bush into the die-holder, having its end recessed to take the tip of the mandrel. The bush stays in position until it is pushed out by the metal starting to extrude (Fig. 50). On the whole it is doubtful whether this device serves a very useful purpose, for it can only centre the mandrel at the outset, and it can become deflected almost immediately if other circumstances are unfavourable.

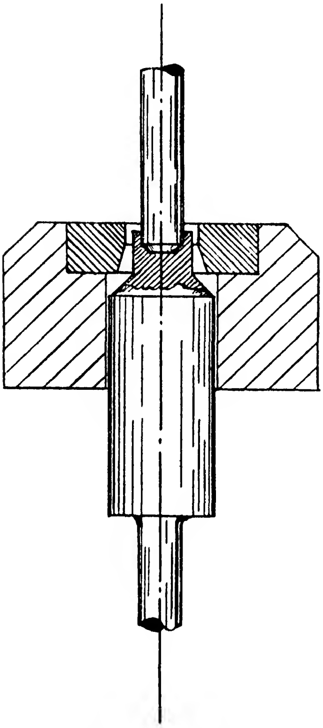

FIG. 50.—Use of bush to centre mandrel.

(3) *Piercing.* The preparation of hollow tube billets, whether by casting, boring, or piercing in a special press, is expensive, and there is the additional disadvantage that such billets become oxidized on their inner surface during preheating, increasing

mandrel wear and leading possibly to defects in the tubes. Rapid and economical production of tubes in many materials is nowadays greatly facilitated by piercing and extruding solid billets in the press as part of a single operation. It is certainly possible to do this with a mandrel fixed to the end of the ram, and which, with its nose specially shaped for piercing, penetrates the billet first and then, as the extrusion ram makes contact with the billet, serves as an ordinary mandrel during the extrusion stroke, but it is impossible to make tubes of uniform thickness in the horizontal press in this way, because the hole pierced in the loose-fitting billet as it lies in the bottom of the container is not concentric. Better results are obtained in the vertical press, especially if a small hole is drilled in the back end of the billet to locate the piercer.

In the practice adopted in many modern presses, the piercing mandrel is actuated by a separate hydraulic system, and moves coaxially with, but independently of, the extrusion ram, within which it is withdrawn initially to allow the billet to be fed into the container. This permits the billet to be upset first of all by the extrusion ram, before the piercer is driven through it. The advantage gained in thus combining piercing and extrusion in a single operation, as compared with piercing beforehand in a special machine, is the saving in reheating the billets. Piercing is not without certain disadvantages in that the operation may sometimes give rise to cracks and tears in the bore of the billet, leading to defects on the inside of the tubes. Moreover, the lubricant applied to the mandrel to begin with is mostly rubbed off during piercing so that lubrication is deficient during the actual extrusion, to the possible detriment of the inner surface finish of the tubes. Finally, piercing requires rigorous accuracy in the construction of the presses designed to perform it.

The Schloemann press shown in section in Fig. 51 illustrates the construction of a unit of 1500 tons, equipped in this way, in which are seen many features of modern design. As it is shown, it is fitted with a special inner liner in the container for extruding tubes from short billets. The operation of the press when making tubes can be followed with the aid of Fig. 52. (*a*) With the piercer withdrawn flush with the end of the ram, the billet is pushed into the container and the pressure disc, which is bored out to pass the piercer, is placed in position. (*b*) The billet is upset by the ram,

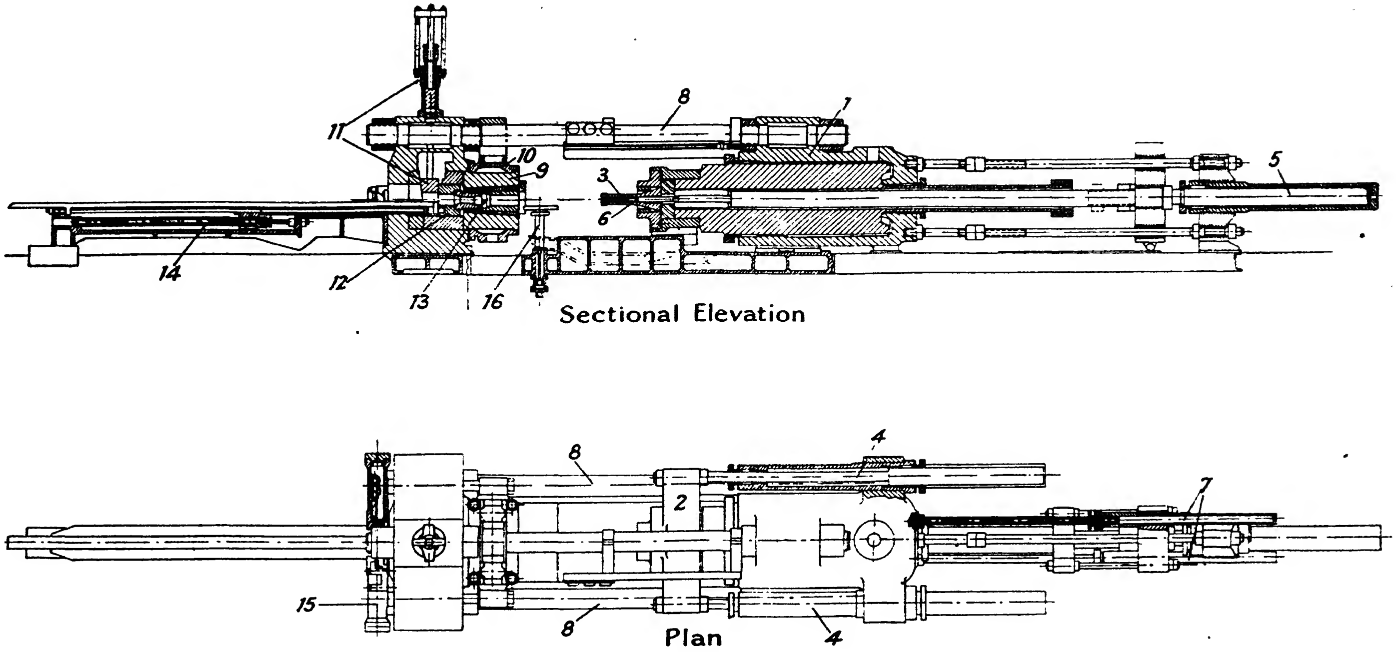

FIG. 51.

1. Main press cylinder and ram.
2. Main ram crosshead.
3. Extrusion ram.
4. Drawback cylinder for main ram.
5. Operating ram for piercing mandrel.
6. Piercing mandrel.
7. Mandrel retractor cylinder.
8. Press tension columns.
9. Container body.
10. Container holder.
11. Wedge for locking die-head, and hydraulic operating mechanism.
12. Die-head.
13. Die.
14. Hydraulic reciprocating table for die-head.
15. Hydraulic cut-off shears.
16. Billet cradle.

which is then withdrawn slightly to allow the billet to elongate during piercing. (*c*) The piercer is driven through, ejecting a small wad of metal through the die. The ram and piercer, the latter acting now as a mandrel, next advance together to extrude the tube. The piercer is then withdrawn, and the final operations are the same as those described above in connection with the extrusion of bar.

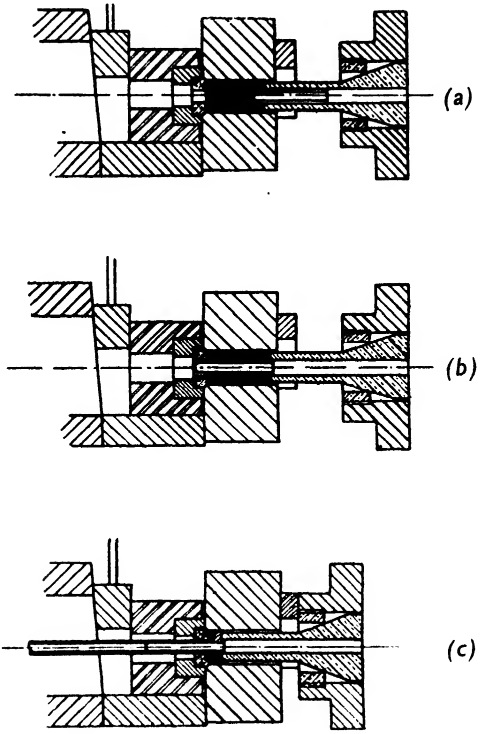

Fig. 52.

Severe tensional stress is set up in the mandrel during extrusion by the frictional drag of the metal flowing over it and tending to pull it through the die. This led at one time to a good deal of trouble, frequently causing mandrels to elongate and, sometimes, to rupture. By allowing the mandrel to move forward through the die at a rate which need not be the same as that of the ram, this stress is considerably reduced. With the newer mandrel materials, it is not essential with most metals to do this, and when it is desirable, the mandrel can be held stationary. It can be arranged to do this in any position by providing the mandrel with very powerful hydraulic actuation, or by the adjustment of special stops to limit its travel. With a mandrel having a considerable taper over the first inch or two, tubes of different bore can be made in this way, while a mandrel tapered suitably over its length, which is advanced at a controlled rate during the extrusion, can be used to give tubes which vary progressively in bore and wall thickness. Other applications of the independent regulation of mandrels are referred to later in this chapter.

Factors Affecting the Production of Tubes. It is opportune to consider these at the present stage, since the manufacture to meet specified dimensions, important for all extruded products, and beset with greater difficulty in the case of tubes, is closely bound up with questions of press design and methods of working. The chief requisites in the production of concentric tube appear to be: (*a*) that the extrusion ram and mandrel travel in axial alignment with the container and die; (*b*) the provision of tubular billets, either previously prepared, or by piercing *in situ*, in which the hole is concentric; (*c*) that the billet should offer equal resistance to deformation over its cross-section. It is one of the principal merits of the vertical press that these requirements, in general, are more easily attained in it than in the horizontal type. Under heading (*c*), for example, a billet is loosely inserted in the latter and resting at the bottom tends to become chilled at that point before squeezing up occurs, and in consequence the piercer tends to be deflected up into the hotter metal. The unequal temperature distribution also affects the plasticity of the metal, increasing the flow in the hotter zone during extrusion and displacing the mandrel towards it, so causing the tube formed to be thicker at its under side. A further point is that any lubricant applied to the container may run down to the bottom and, by affecting the friction between it and the billet, induce variations in the flow of the metal. These are all ways in which the concentricity of the tubes may be affected.

With regard to (*b*), hollow tube billets can be made by casting them directly in moulds round tapered steel cores, or oil-sand cores, or by boring out from solid ingots. The use of sand cores, once common in brass practice, is now less frequent, and where it is still employed, the billets are generally bored out subsequently to get rid of sand inclusions in the casting skin which cause defects in the bore of the tubes and damage to the mandrels. Hollow-cast billets in aluminium alloys are usually bored in any case to remove the hard oxide skin. Though, on grounds of cost, it is not possible invariably to true up billets by machining them externally and internally, this certainly forms the best starting-point in the manufacture of accurate tubes, besides eliminating surface defects. For those metals for which it is suitable, piercing, either in a special piercing press, or more usually in the extrusion press itself, has been almost universally adopted on account of its economy. •In its present form the horizontal press gives very satisfactory tube by this method. An example of its reliability in this respect is afforded in the manufacture of condenser tubes. Until recently these were almost invariably made in vertical presses, in which fine tubes only $\frac{1}{16}$ in. in wall thickness requiring only light final drawing, could be produced with the necessary precision; but for alloys like 70/30 cupro-nickel, which are comparatively difficult to work, and require a high extrusion temperature, the obvious advantages in being able to extrude so near to finished size are offset by the need to use bored billets on account of the inability of thin mandrels of small diameter to stand up to the work of piercing. It is noteworthy that several manufacturers have now found it advantageous to pierce and extrude, from horizontal presses, tube blanks of about 2 in. outside diameter and 0·25 in. thick in such alloys, and then to draw these down to condenser size, using for this purpose the new tube reducing machines; the increased amount of drawing being compensated by the elimination of the cost of boring and the loss of metal which this entails.

The explanation of the improved performance of the horizontal press in this sense turns a good deal on the measures now adopted to secure the conditions set out in (*a*) above, and these may next be examined in relation to some general features of press design. The arrangement seen in Fig. 51, in which the container is mounted in a holder carried on the press-head, which is connected to the main cylinder by heavy tension columns, is that commonly adopted, though an alternative method in which the container holder is mounted, independently of the press-head, directly on the baseplate of the press, and with freedom to be moved axially by means of small auxiliary rams, is also frequently used on large presses. While on grounds of general accessibility, especially for charging billets, the three-column type of construction, and still more the yoke frame press shown in Fig. 60, are to be preferred to that in which four tie-bars are used, the operation of changing the container is not so easy in the two former, and where this weighs several tons, the latter arrangement has the advantage of allowing it to be lifted out directly through the top pair of columns. The trend for very large presses is to revert to the four-column design used in the earlier presses.

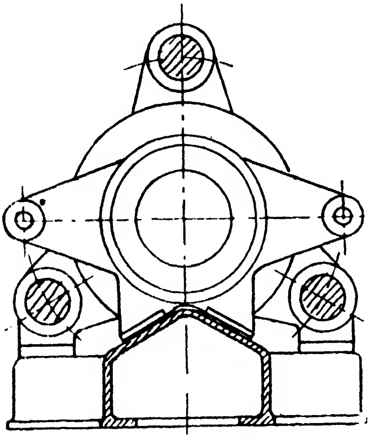

FIG. 53 (*a*).—Section through main cross-head, showing method of supporting it through shoes on prismatic slide.

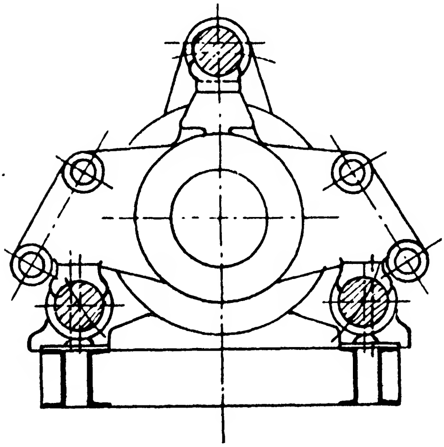

FIG. 53 (*b*).—Former arrangement with main ram cross-head supported on press columns.

For the purpose of considering how alignment of the working parts of the press is achieved and maintained, we may consider it to consist of two groups—the first comprising the main cylinder and ram, the extrusion ram, and the piercing gear; and the second composed of the press-head, the container and the die assembly. In the press shown in Fig. 51 the ram for the piercer is guided over the whole length of the main ram in a central bore so that the axes of the two coincide. The main ram is itself supported in long bronze bushes within the main cylinder and, in addition, the main ram cross-head, to which the extrusion ram is attached, travels on a prismatic slide on the baseplate, provision being made at this point for adjustment and for taking up wear on the shoes (Fig. 53, *a*). It is no longer usual, as was formerly done, to guide this cross-head on the press columns (Fig. 53, *b*), on account of the possibility of these distorting under pressure. Particular care is needed to ensure that the initial position of the container in exact axial relation with the ram and mandrel does not become disturbed during working. This is very liable to occur because the container, heated by the billets, and often heated also externally, transmits heat to the neighbouring parts of the press, such as the holder and press-head, causing them to expand. The effect of this, unless precautions are taken to arrange that this expansion can take place freely about the horizontal axis of the press, is to cause offcentring of the container, so that, with the base of the press-head resting on the base plate as shown in Fig. 54, vertical displacement of the container results. This is important enough to merit a brief survey of the measures taken to overcome it.

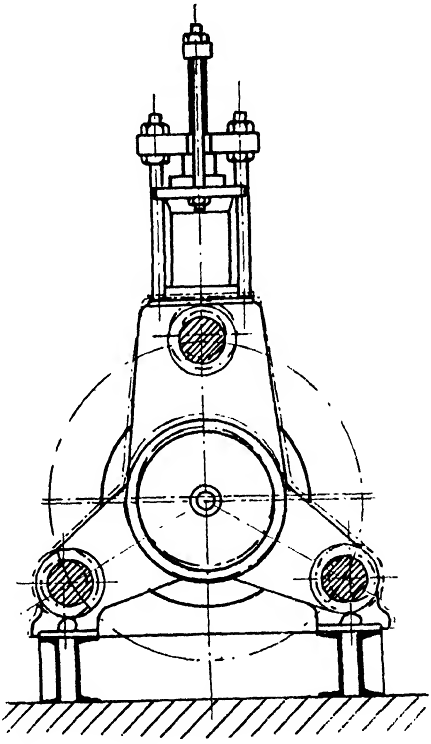

FIG. 54.—Vertical section through container cross-head, showing offcentring due to thermal expansion.

So far as heat changes in the container itself are concerned, Fig. 55 shows a method to ensure radial expansion while keeping the container (1) immobile as a whole, by surrounding it by a loose-fitting holder (2) with which it engages by means of radial ribs (3). Fig. 56 refers to a construction by which the press-head is carried on stools forming part of the baseplate, the tops of which are in the same horizontal plane as the press

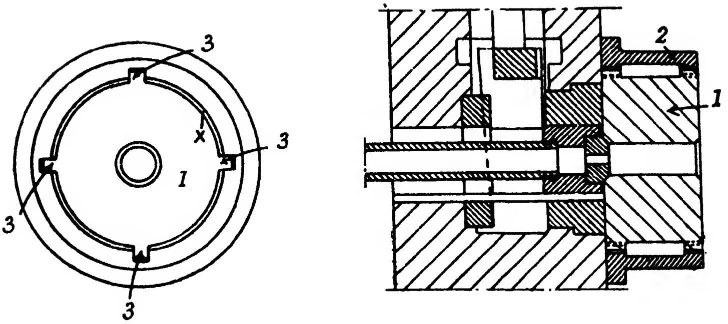

FIG. 55.—Method of mounting container in holder to permit radial expansion.

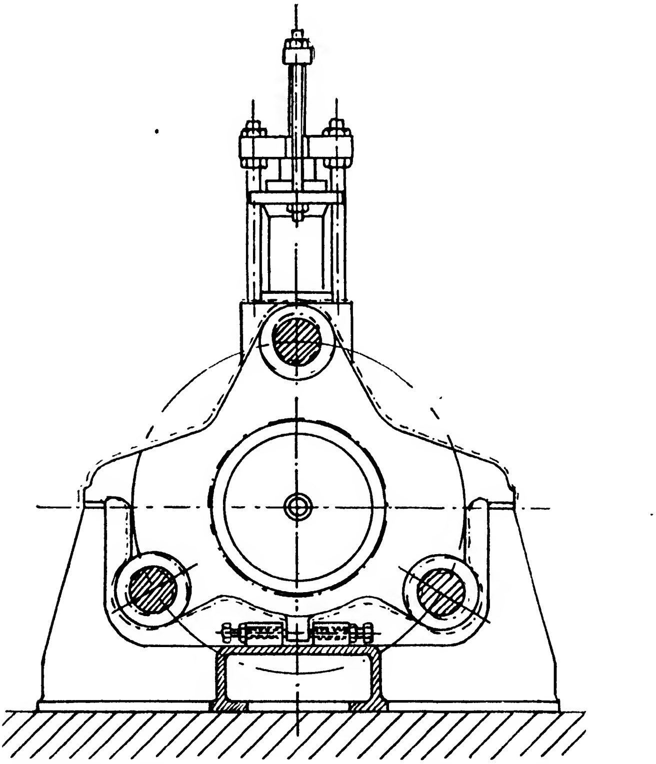

FIG. 56.—Press-head carried on stools lying coplanar with press axis to distribute thermal expansion equally.

axis, so that thermal expansion is equally distributed about this. Another design is that illustrated in Fig. 57, in which the press-head and container are carried on bevelled supporting surfaces, (*x*, *x*), on the baseplate. The planes containing these surfaces intersect at the longitudinal axis of the container, and thus the position of the latter is unchanged by expansion of the adjacent parts. In the Eumuco press semicircular projections (1) on the bottom of the main cylinder casing rest in two troughs (2) (Fig. 58), side by side on the baseplate, so that this end of the press can pivot about a horizontal axis perpendicular to the direction of working. The press-head (3), carrying the container (4), is supported on rollers (5), mounted on slippers (6) on the baseplate. The main cylinder and press-head are rigidly connected by the tension columns so that when the press-head expands, displacing the container upwards, the entire press makes a pivotal movement about the troughs under the main cylinder, while any lengthwise movement is permitted by displacement of the slippers. In a further recent device illustrated in Fig. 59, two links (1) are used to support the press-head (2). The links are attached to a carrier block (3) and to lugs (4) on the press-head, and are so located in relation to the container that they are substantially perpendicular to the direction of expansion of the press-head at the points of support.

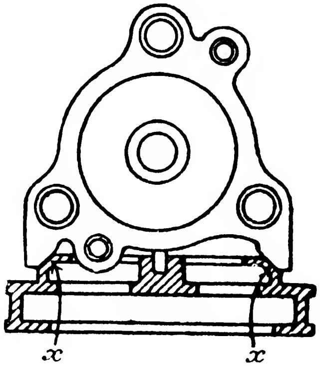

FIG. 57.—Press-head carried on bevelled surfaces which intersect at axis of container.

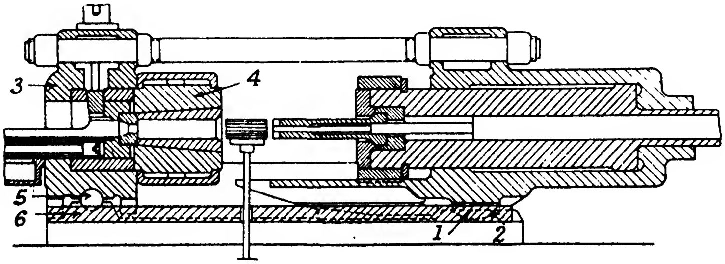

FIG. 58.—Pivoted mounting to avoid the effects of thermal expansion.

Any expansion of the press-head will cause a slight rotation of the links on their pivots, but will result in no bodily movement of the press-head or container. Screws (5) between the carrier block and baseplate provide the means of setting in the first place. A lug (6) on the head projecting into a groove in the carrier block prevents lateral displacement in relation to the vertical central plane. A feature of this scheme is that the thermal effects are taken care of without need for sliding movement between the heated and the supporting parts.

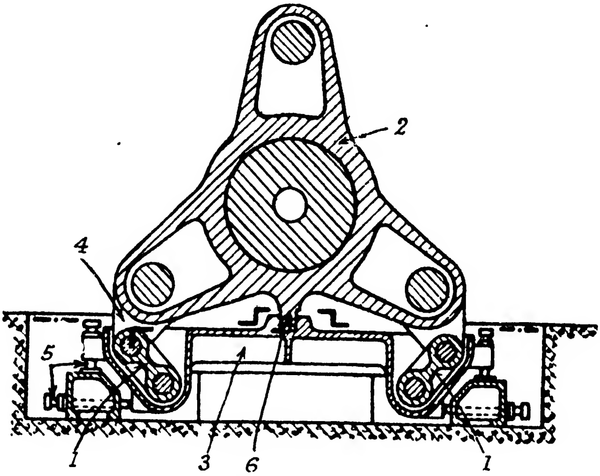

FIG. 59.—The press-head is supported on links to accommodate thermal expansion.

A Horizontal Press for Direct and Inverted Extrusion. A press which differs considerably both in design and operation from the more general type hitherto dealt with is illustrated in Fig. 60. Although it is not unique in this respect, it offers a good example of a press in which the container is movable over a long distance, and one which provides the alternative use of either the direct or the inverted method of extrusion. The press frame, formed by a heavy steel casting in one end of which is set the main cylinder, is carried on two transversely set baseplates in a way which permits longitudinal expansion but prevents lateral displacement. The main ram cross-head and the container in its holder are carried, freely of the frame, on slideways on the baseplates, where adjusting screws are fitted. The main ram is guided also by means of a thick-walled extension tube on its back end passing

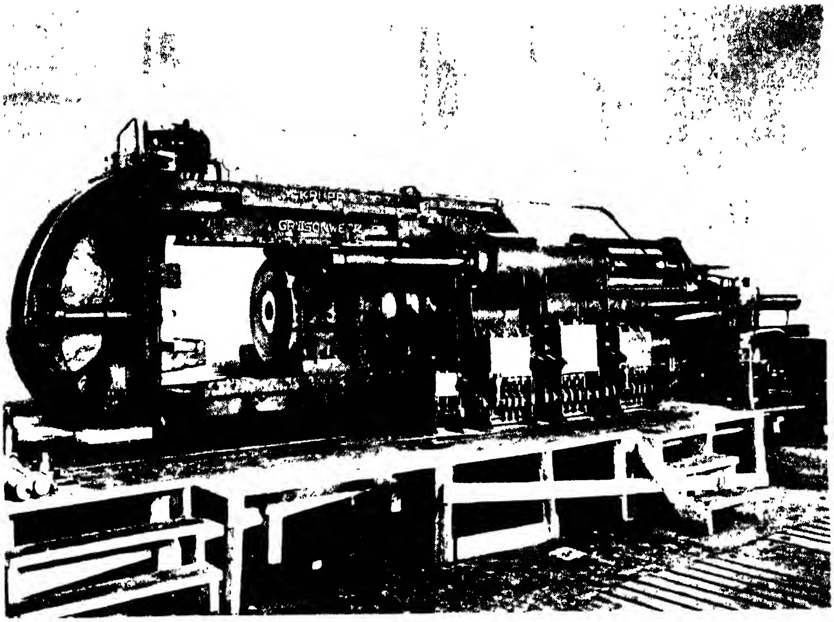

FIG. 60.—Krupp press of unorthodox design, with cast steel yoke frame and movable container, capable of being adapted to work by the inverted process.

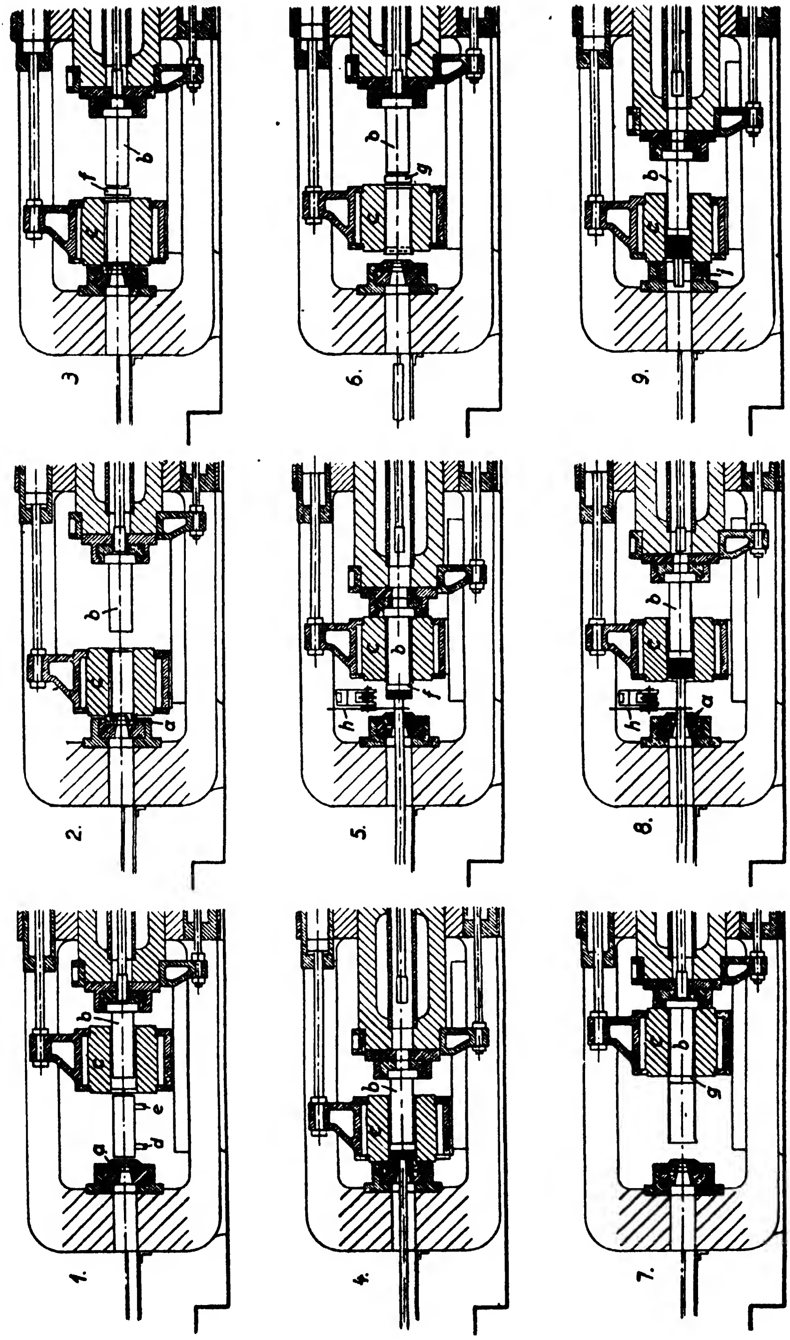

FIG. 61.

through a radially adjustable stuffing box at the rear of the main cylinder. The piercer ram is also guided in this tube. The container is set in the holder by radially adjustable segments in the latter engaging in a ring nut on the container. The container is not carried in attachment with the head of the frame, but is given a long travel by an independent ram. The die-holder is set in a sliding locking bar which is buttressed against a plate in the head of the press. At the end of an extrusion, the product is cut off and the discard removed between the die-holder and the container by moving the latter back clear, and since, when this is done, the die is accessible for inspection and attention, it can, if required, be left in place for the next extrusion. In order to change the die, the locking bar is moved transversely to bring the die-holder in front of a small ejection ram on the side of the frame. The yoke frame and the arrangement of all auxiliary mechanism on the back of the press afford particularly ready access to the tools. This press can be used to illustrate some possible modifications in extrusion procedure to that already described.

The series of sketches in Fig. 61 show the process of extrusion for solid sections. It will be seen that, for charging, the container (*c*) is drawn back over the ram (*b*), and that the billet is brought up in front of it (1). The container is then moved forward over the billet until it engages with the conical rim of the die-holder (2). The pressure disc (*f*) being inserted (3), the extrusion ram is advanced to extrude the billet (4). Both container and ram are now drawn back about 8 or 9 in., and a pendulum saw (*h*) is swung in to cut off the bar close behind the die. Next, the container is drawn back further, so that, the ram remaining stationary, the billet residue and pressure disc are pushed out (5). Finally, the ram is fully withdrawn and the container advanced to allow a clearing disc (*g*) to be inserted (6), whereupon the container is drawn back over the ram pushing out the sleeve in front of the disc (7). In the case of a sticker, where there may be insufficient power to eject the billet by moving the container as above, then, the length of bar already extruded having been cut off (8), the locking bar (*j*) is slid across until a hole in it coincides with the container bore, when the billet may be pushed out through the press-head by the ram (9). The insertion, compression, piercing and extrusion of solid billets into tube requires no further explanation than is provided by Fig. 62.

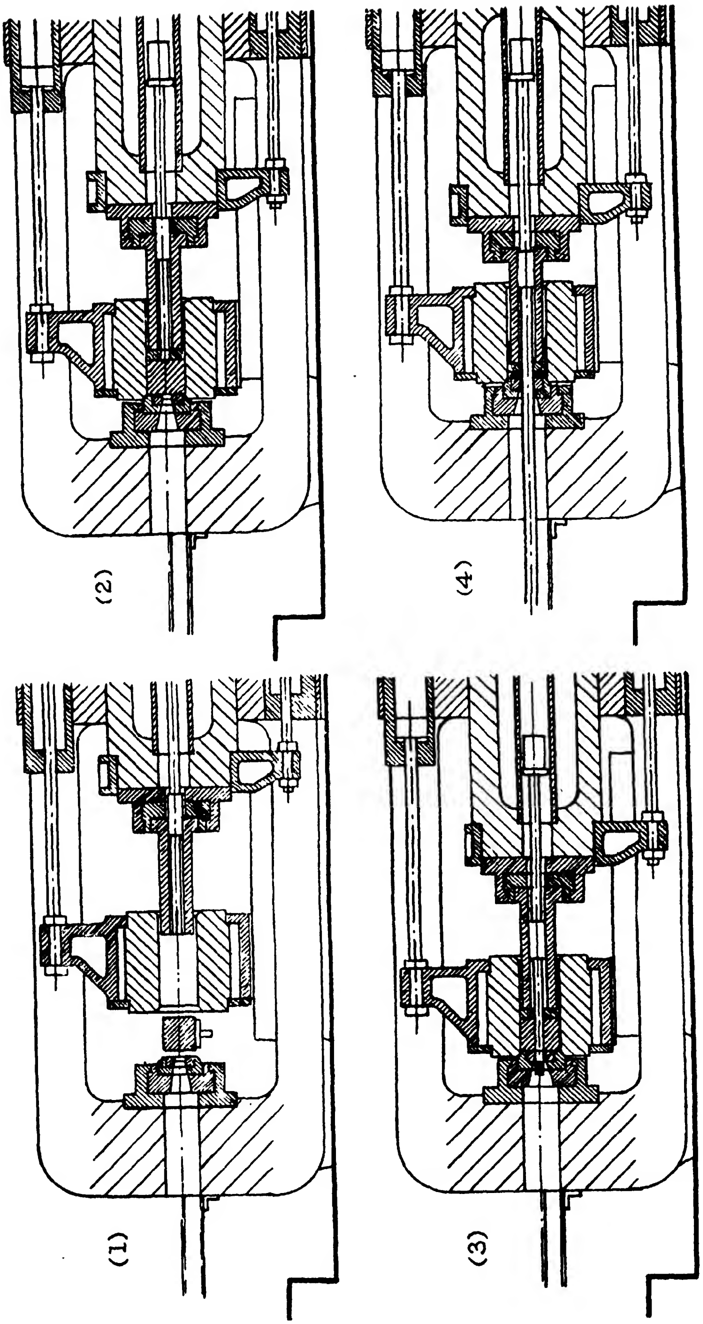

FIG. 62.

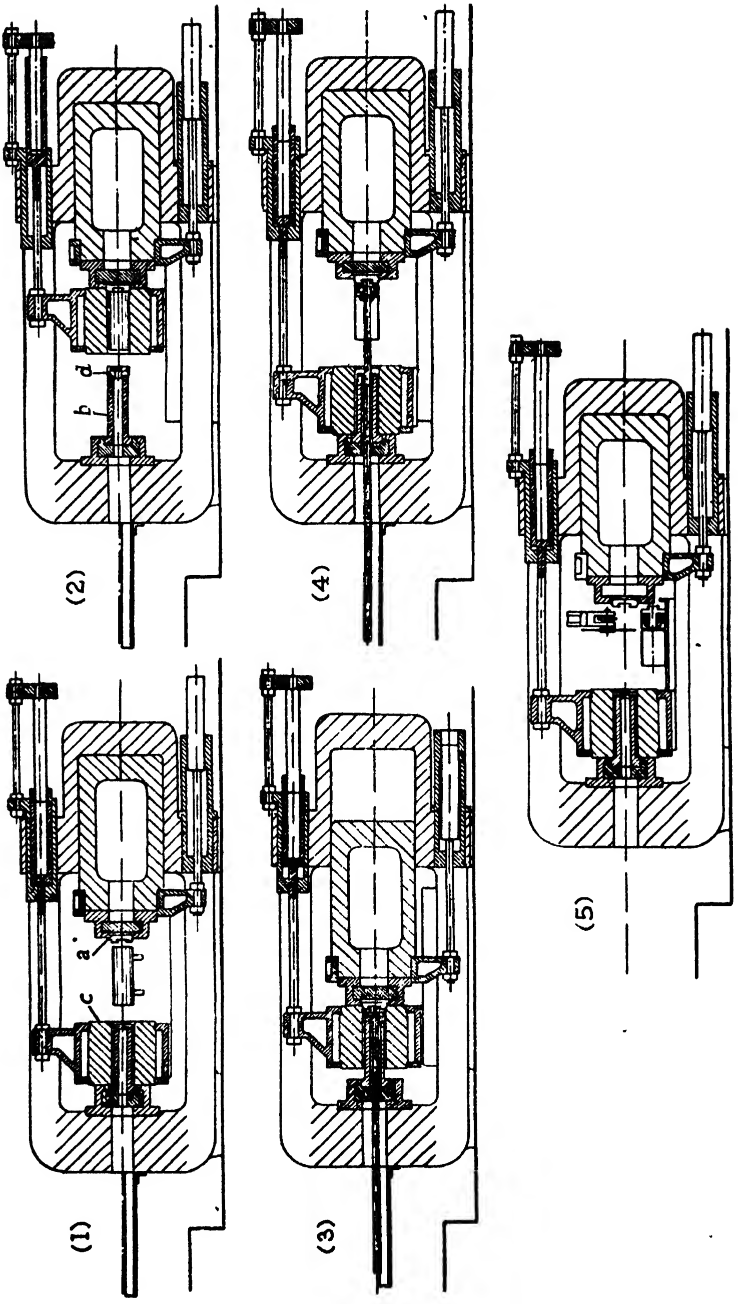

FIG. 63.

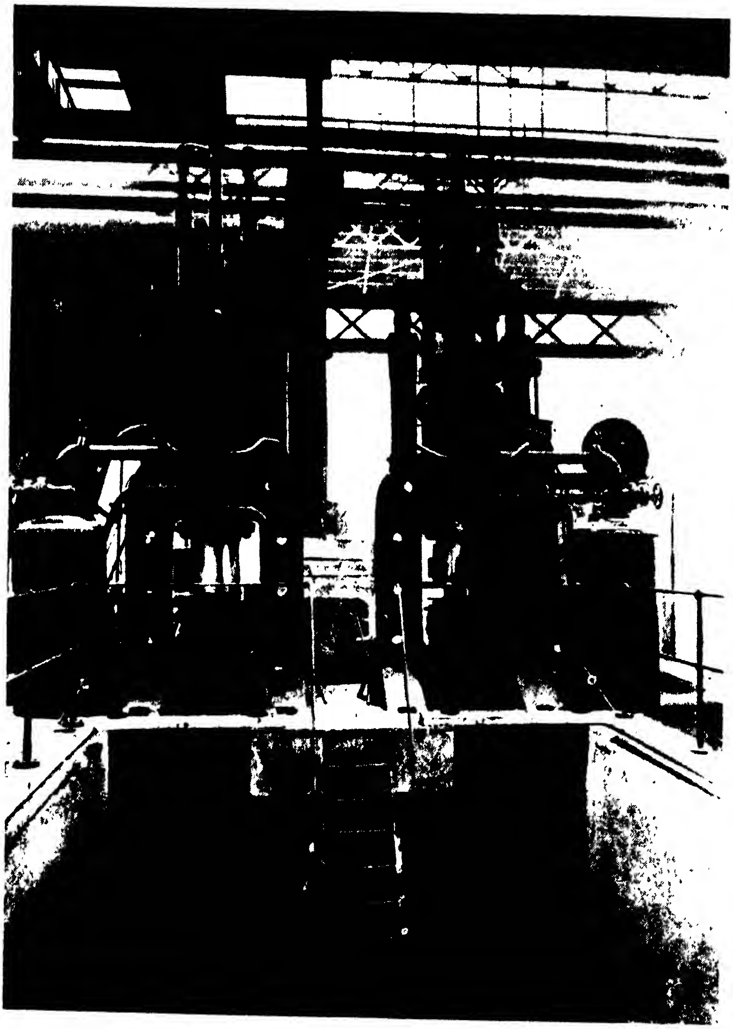

Fig. 64.—Schloemann vertical tube-presses with piercing equipment.

[*Facing page 78.*

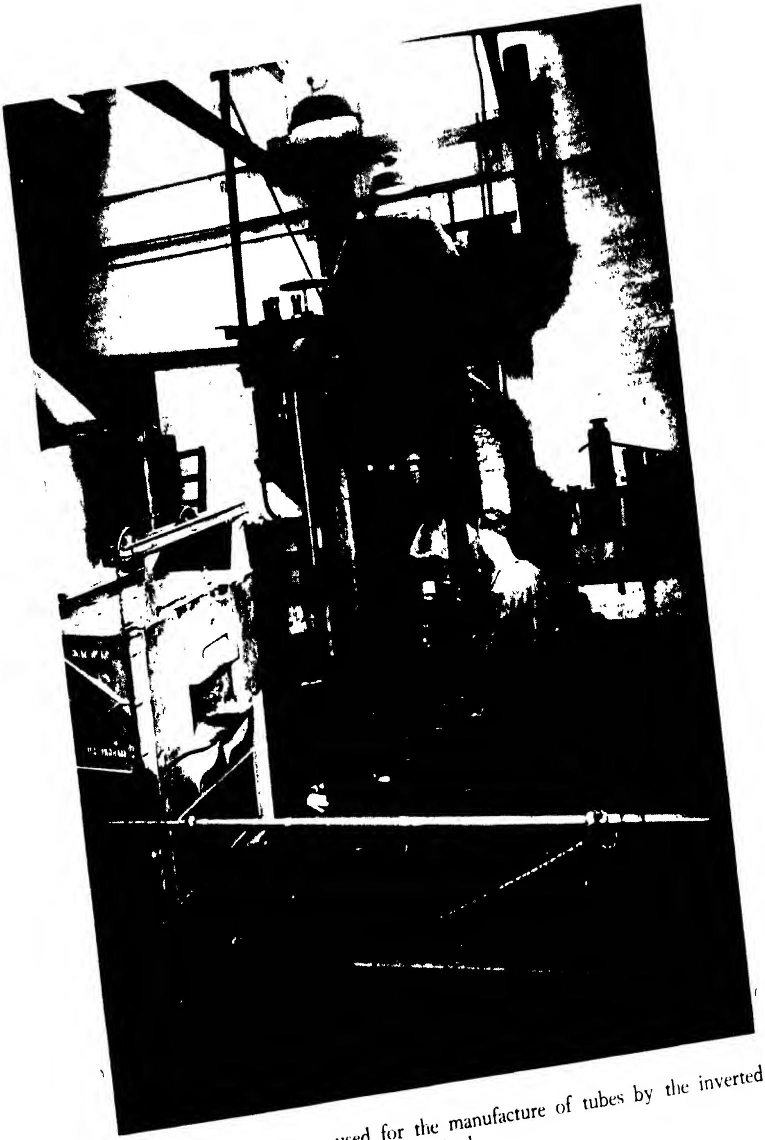

Fig. 65.—Vertical press used for the manufacture of tubes by the inverted method.

(*Courtesy of Serck Tubes Co.*)

The final stages of the cycle in this case are the same as those just described.

For extrusion by the inverted method, the die-holder is replaced by a die-stand (*b*) in Fig. 63, equal in length to the container (*c*), and the extrusion ram is replaced by the closure plate (*a*), attached to the main ram cross-head. The sketches show the method of working. In (2) the container is moved over the billet, and the die (*d*) is set in position. The extrusion stroke now begins, and it will be observed that the container is advanced under power from the main cylinder, so that the die is pressed into the end of the billet; the extruded rod passing out through the die-stand as seen at (3). (4) and (5) show the ejection and sawing off of the sleeve and discard.

Vertical Presses. In the introduction to this chapter reference was made to the pros and cons of vertical presses. As compared with the extent and variety of production from the horizontal, they are of far more specialized application, being confined very largely to the manufacture of high-quality tubes of small thickness and diameter in brass and other copper alloys, using small billets, and extruding as a rule at high speed. What has already been said concerning the factors of importance in the extrusion of tubes will probably have suggested that the most favourable combination for the production of concentric tubes is to be found in this form of press, using a floating mandrel and with hollow cylindrical billets accurately machined inside and out. All the same, extremely satisfactory results for most purposes are obtained at lower cost by starting with solid billets and piercing them in the press. As compared with horizontal machines, accurate piercing is rather easier to secure owing to the absence of unidirectional thermal expansion in the press itself and in most designs equipment for piercing is provided. Fig. 64 shows a pair of vertical presses. Actually all the methods of operation used in horizontal working, including direct extrusion with and without piercing, with fixed and movable container, and extrusion by the inverted process, are also to be found in vertical plant and, in view of the descriptions already given, the only example described will be a press by Serck, seen in the photograph, Fig. 65, in which a very successful use has been made of the inverted principle. The movable container is guided on vertical columns, which serve also as the return cylinders for the main operating ram. The arrangement of tools and conduct of an extrusion may be followed in Fig. 66. The sketch at (*a*) shows the container (1) in its top position just covering the end of the die-stand (2). When a hot billet has been charged, a closure plate (3), which also serves as a guide bush to the mandrel (4), is placed over the open end of the container and the mandrel, of floating type but fitting into a recess in the end of the operating ram (5), is put in place and entered into the hole in the closure plate. In the next stage (*b*), the operating ram pushes the mandrel through the billet, and then, as the ram comes against the closure plate, the container is forced down over the die-stand to extrude the billet. When the ram is drawn back after the extrusion the closure plate and mandrel are also withdrawn, being held by the extractors (6). Meanwhile the container which is mounted on pneumatic rams is held down in the bottom position by a catch. The last operation, which is shown at (*d*), is to replace the mandrel by a punch (7) which, in a further stroke, trims off the tube at the die and lifts out the residual disc of the billet.

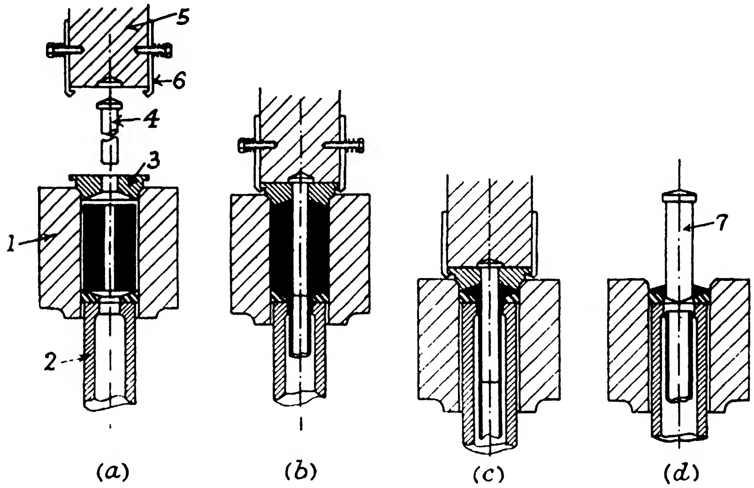

Fig. 66.—Diagram showing extrusion of tubes by inverted method.

Extrusion Tools. Certain of the press components, such as dies, mandrels, pressure discs and containers, constitute the really essential tools in connection with the process. These work under very arduous conditions, being, in varying degree, exposed to the hot metal, and having to sustain the combined effect of thermal and mechanical stresses. The high temperatures and pressures employed in certain phases of extrusion at the present time impose conditions which are extremely severe, testing to the limit the special steels used in making the various units. On the other hand, tools for use in connection with the more readily extrudable metals, like most of the brasses, and for less onerous duties for such parts as die-holders, present problems of a lower order which are fairly easily met. The steels employed for various functions naturally vary a good deal according to the metals being worked and the preferences of users; data regarding them exist only in a scattered form, although Plankensteiner[1] has given a survey of the main requirements.

Dies. The die takes some of the heaviest duty and is the tool which is subject to the greatest alteration in use. It must possess heat resistance and temper-retaining characteristics of a high order for its work in bringing about the deformation of the metal and withstanding the abrasive wear which this causes. The properties required are a high degree of hot strength in association with sufficient toughness to allow the die to adjust itself without risk of cracking. This involves a compromise in which most users incline towards toughness rather than extreme hardness, especially with dies of complex shape. Even so the Brinell hardness can rarely be allowed to fall below 300 and is generally in the range 320–75, only occasionally going as high as 450.

Typical steels of the kind now chiefly employed are as follows:

C per cent	Si per cent	Mn per cent	Cr per cent	Ni per cent	W per cent	V per cent
0·2	0·2	0·25	2·5	2·0	10	0·5
0·35	0·25	0·25	3·0	–	9	–

Treatment consists in oil hardening from 1130° to 1180° C. and tempering, according to requirements, at from 580° to 650° C. These are steels which are capable of retaining in use the properties imparted by the heat treatment. Steels of composition such as C 0·4 per cent; Si 1·3 per cent; Cr 12 per cent; Ni 12 per cent; W 2 per cent, which are entirely austenitic in structure and possess superior properties at elevated temperatures, have been put into use for very high temperature work. A steel of this kind cannot be hardened in the ordinary way, but its strength can be increased by cold forging the die blank in the first place.

Mandrels. Being of relatively small mass, and surrounded entirely by hot metal, so that they heat up quickly, mandrels required in extruding tubes are exceptionally exposed to heat in use, the more so when they are. of small diameter. Those used to pierce solid billets have to sustain powerful compressive and bending forces. During subsequent extrusion, severe friction occurs and a strong tension is set up by the drag of the metal flowing round the mandrel. Owing to the nature of the flow, this stress is highest a short distance in front of the pressure disc. Mandrel steels suitable for medium and high temperatures respectively are:

C per cent	Si per cent	Mn per cent	Cr per cent	W per cent	Mo per cent
0·35	1·0	0·5	1·3	4·25	0·35
0·35	0·25	0·25	2·5	9·0	–

These are treated to an ultimate tensile strength of 95–100 tons per square inch. In order to retain their temper, mandrels require to be cooled after each operation, either by using a fine spray cooler on them *in situ*, or in an oil-bath. This, however, does not apply to tools for light alloy presses, which are actually preheated to the extrusion temperature of the metal.

Containers. The press container undergoes severe thermal stress as the result of heat gradients set up by the hot billets, besides taking the heavy internal pressure exerted by the ram during the extrusion stroke. Much of the early trouble from cracking and scoring of the cylinder bore has been obviated by the invariable use now of replaceable liners made of special steel, which are shrunk inside the container body. The residual internal stress induced by this method of assembly serves to counteract appreciably the dangerous tensile stresses in the tangential direction during working. For extruding such metals as copper, high nickel-silvers, nickel, etc., for which the temperatures are high, a steel of the following analysis, treated to 95–100 tons per square inch U.T.S. is suitable. C 0·25 per cent; Si 0·2 per cent; Mn 0·2 per cent; Cr 2·5 per cent; Ni 1·5 per cent; W 10·0 per cent; Mo 0·2 per cent; V 0·2 per cent. Where extrusion is carried out at under 800° C., this liner can be more cheaply made from a steel of the nickel-chrome-molybdenum type, or from one having C 0·4 per cent; Cr 1·5 per cent; W 2·5 per cent; Mo 0·5 per cent; brought by heat treatment to 90–95 tons per square inch U.T.S.

Outer liners, being less subject to heat, are usually made of lower alloy nickel-chrome steel, with a tensile strength of 75–80 tons per square inch. The container body is forged from 0·7/0·8 C steel of acid quality, or from a low alloy steel as, for example, C 0·35 per cent; Cr 1·5 per cent. This does not hold good for extrusion presses for strong light alloys, when the whole of the container is heated to a temperature in the region of 450° C., at which carbon steels are insufficiently strong. In these cases, the whole assembly must be made in the special heat-resisting grades of steel.

Pressure discs are made, for medium heat, from steel containing C 0·25 per cent; Cr 1·3 per cent; W 4·0 per cent, or, for heavier duty, C 0.35 per cent; Cr 3·0 per cent; W 9·0 per cent. Extrusion rams, which are protected from the worst temperature effects by the pressure disc, are mainly subject to compressive and bending stress. Steels, for this purpose, to which are given tensile strengths of 100–110 tons per square inch, are suitably made to contain C 0·35 per cent; Cr 1·5 per cent; Ni 4·5 per cent, and often have, in addition, Mo 0·25 per cent.

The Form of Extrusion Dies. The preparation of dies for extrusion is a highly technical job calling for skill and experience that varies according to their intricacy. That such a multitude of sections as is now available to meet the needs of engineers and others can be produced, is attributable in no small degree to the resourcefulness of the die maker. He has many things to take into account, such as the special characteristics of the metal to be extruded, allowances for stress and distortion, and the thermal contraction of the extruded section after leaving the die; as well as the precautions to assure well-balanced flow of the metal into all parts of the die.

The die itself often takes the form of a comparatively thin disc or plate, smaller in diameter than the press container, which fits accurately into a recess in the face of a die-holder, which is, in turn, supported by a bolster (Fig. 67). To simplify manufacture in the case of very complex dies, the plate is sometimes made in several parts. Where the design involves high local stresses, and for heavy service in making standard sections, the plate and holder are combined to make massive dies which fit directly into the bolster.

Some modifications of the comparatively simple dies used in making round, hexagon and other plain sections and tubes are shown in Fig. 68. It is often a matter of surprise that in contrast with those used in drawing operations, the form of die most frequently adopted for extrusion is made with square shoulders with little or no lead-in, like that in the sketch (*a*). Many different profiles have been tried out, often in an attempt to shape the entry to accord with the known streamline path adopted by the metal, but experience has shown that most of these are unsatisfactory.

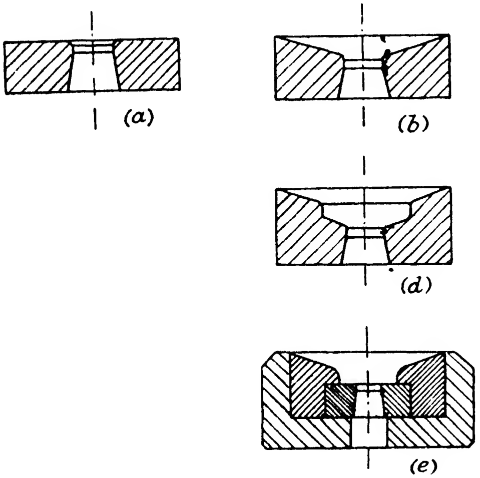

FIG. 68.

As a rule, a small radius is given to the front lip of the hole. This almost certainly gives rise to a slight increase in extrusion pressure, but is desirable to prevent the closing-in which a sharp-edged die would suffer, and which tends to occur in any case, especially with metals requiring a high extrusion pressure. There is some evidence, too, that the slight rounding of the lip helps to prevent surface cracking in extruding metals of low plasticity. For tough materials such as copper, cupro-nickel and monel, Bernhoeft[2] suggests radii, for a 1-in. die aperture, of 2–5 mm., 4–8 mm., and 10–15 mm., respectively. Aluminium, and many of its alloys, on the other hand, works best with practically sharp-edged dies radiused to 1–2 mm., having a short bearing length and well relieved on the

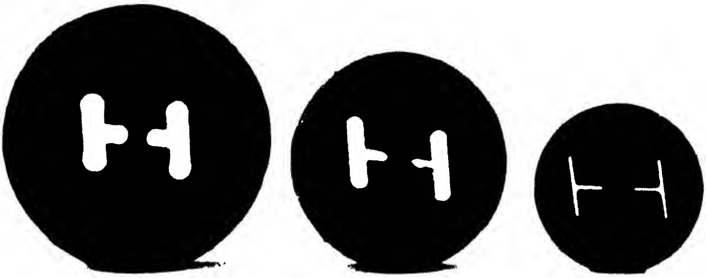

FIG. 67.—Die-plate, holder and bolster.

(*Courtesy of Reynolds Tube Co.*)

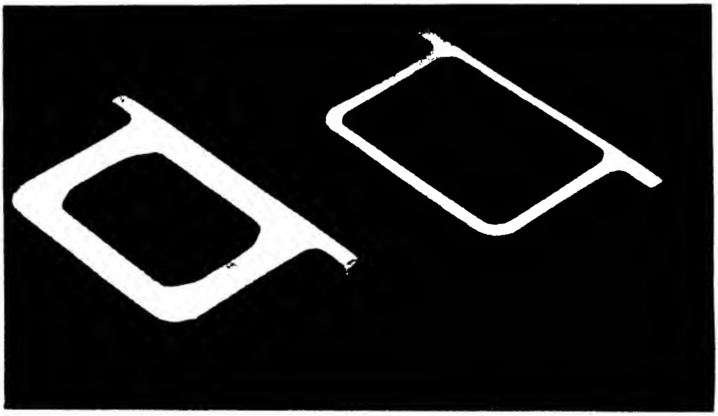

FIG. 69.—An extruded taper section.

(*Courtesy of Reynolds Tube Co.*)

[*Facing page* 84.

back side to do away, as far as possible, with the tendency of the aluminium to adhere to the die surface. A long bearing length, while it serves to strengthen the die and lengthen its life, restricts the easy flow of the metal; it is generally made from $\frac{3}{16}$ in. to $\frac{1}{2}$ in. long, being greatest for large diameter rods and easily extruded materials.

Resort to dies of conical form represented by (*b*) or less commonly by (*c*) is frequently made in making tubes, especially in tough metals. The cone angles most used lie between 120° and 160°. They possess some advantages which will be referred to later. The cascade type of die shown at (*d*) is claimed to give good results with hard alloys. In order to reduce the load on the die plate and prevent it becoming bowed, a novel kind of die (*e*) in which the die plate is recessed into the back of the die body has been developed in France. The subject of die form, as it affects the force required in extrusion, will be discussed in Chapter VI.

On the highly specialized subject of dies for the more involved sections, no more can be attempted here than to put down some general observations, and to give a few examples of unusual interest. For the extrusion of shaped sections which are of variable thickness in different parts ingenuity is required to obtain a satisfactory distribution of flow through the die. The resistance to flow is lowest in the widest parts and highest where the section is narrow or in the vicinity of sharp corners, and hence the rate of flow tends to be variable. This is partly because less deformation of the metal is entailed in the wider parts, and is partly due to the greater friction at the die surface and the increased cooling effect of the die at the narrow places. Unless it is corrected this leads to buckling and twisting of the extruded section, and to tears and ragged edges in the parts of least thickness. The main means of control is by increasing the friction at the places where flow is easiest, and this is done by increasing the bearing length of the die, or by opening it up at the front to give a slight taper to the bearing at these points, so as to choke the flow. Smooth finish to the working surfaces is needed to avoid transmission of irregularities to the extruded section. Dies for aluminium alloys are generally polished to avoid surface roughness on the section resulting from adhesion. In this connection, chromium-plated dies have shown some promise, but there is difficulty in obtaining satisfactory adherence of the plating.

Dies in which there is a re-entrant tongue, as in such engineering sections as channels, suffer from weakness owing to the difficulty of supporting the tongue, to prevent it from being pushed back or fracturing across its base. This danger is greatest with stiff alloys, and when the flanges are narrow, so that high pressures are required, and this imposes a limit on the depth of channel relative to its width. Worsdale[3] has referred to a method applied to very deep, narrow channels in strong light alloys; by which they are extruded with the flanges splayed out, these being drawn down parallel afterwards.

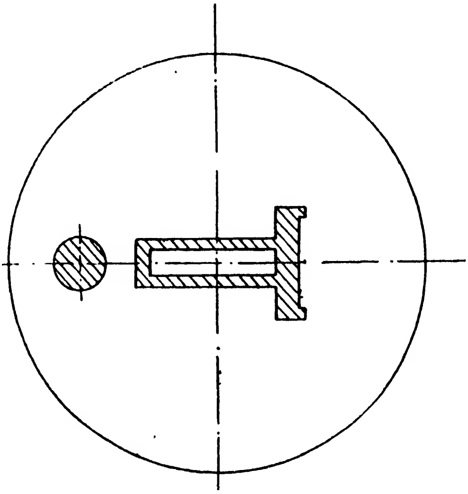

Fig. 70.—Die made with additional aperture to balance flow when extruding a section of unsymmetrical shape.

The point has been made that in extruding tubes, a homogeneous state of plasticity is wanted so that the metal flows uniformly into the die annulus and, by exerting an even pressure on the mandrel, maintains it centrally to give a concentric tube. In making hollow sections, the walls of which may be of unequal thickness, it is necessary that their shape should be such as to ensure symmetrical flow round the centrally placed mandrel. In Fig. 69, the flow round the rectangular mandrel is balanced and this would still obtain if the side walls were given a different thickness from the base and top. It is possible, exceptionally, when symmetry is unattainable, as in Fig. 70, to overcome the problem by extruding simultaneously through an additional aperture in the die placed as shown.

Taper Sections. Normally extruded products, whether of solid or hollow section, have a uniform cross-section over their length. For some purposes this is a limitation, and considerable importance attaches to the practicability of producing tapered sections. Some successful developments have been reached in regard to this. In the case of tubes, it can be effected by the use of a tapered mandrel moving with the ram, or whose position is independently regulated by hydraulic means. Fig. 69 shows an example, from the works of Reynolds Tube Co., Ltd., of the application of the principle to other hollow forms. The shape of the hole can at the same time be changed over the length, for instance, from round to square.

Tubes can not be extruded with a bore of less than a certain size, depending on the metal being worked, owing to the weakness of mandrels of small diameter, when hot, towards the powerful tensile force exerted by the flowing metal. As an instance of the use of a regulated mandrel position, heavy-walled tubes in 5 per cent manganese-copper alloy are required for locomotive stay-bolts, which are approximately 1 in. in outside diameter, with a bore of only 0·125 in. The mandrel used to produce this, Fig. 49 (*d*), has a small nipple screwed into its front end, which is maintained stationary just within the die during extrusion.

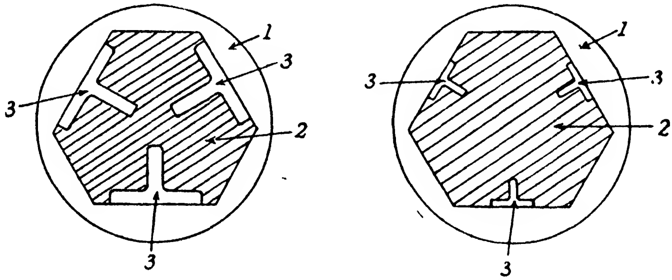

FIG. 71.—Die and mandrel for making tapered solid sections.

Several methods of making tapered solid sections have been proposed. A recent design * aimed at avoiding unwanted variations in thickness due to the lateral displacement of the mandrel is illustrated in Fig. 71. The die (1) is traversed during extrusion by the mandrel (2) of changing cross-sectional form. A number of slots (3), tapering lengthwise, which form the apertures through

---

* Magnesium Elektron Ltd. Brit. Pat. 533,082.

which the metal is extruded, are cut on the surface of the mandrel. Lateral displacement is prevented by the engagement of the mandrel with the die. The mandrel is introduced to begin with into an internal recess in the billet, which is preferably cast in.

Hydraulic Operation of Presses. The high-pressure water required in the working of extrusion presses, which is usually between 3000 and 5000 lb. per square inch, is supplied from motor-driven vertical or horizontal pumps. For the heaviest work, horizontal pumps of the three-throw type, geared directly to the motor, are chiefly used on account of their smooth delivery. The practice of working presses straight off the pumps, as is general for lead pipe and cable-sheathing presses, is, as mentioned earlier, only followed, with harder metals, in a number of rod presses, principally in the U.S.A. The large size of many presses and the call for high speeds of working render almost imperative the use of some form of high-pressure accumulator, in conjunction with low-pressure storage vessels supplying power for the idle motions of the press so as to economize the use of the relatively expensive high-pressure water. The two main types of accumulator which are in general use are the dead weight and the air-loaded or pneumatic. In the first, a steel cylinder, arranged vertically, contains water which is loaded by a piston carrying on its head-plate a set of large iron discs, or a vessel filled with metal scrap or other heavy material, to a total weight of several hundred tons. The dead weight is arranged in relation to the bore of the cylinder to produce the required pressure. Where discs are used for loading, the accumulator pressure can be varied by removing or adding to these. As pressure water is used, the loaded piston descends and is raised again by delivery of water from the pumps, the latter being automatically switched in or out at fixed points in its fall or rise. There are several drawbacks to this type: heavy foundations are required to carry the load, and severe pressure surges are liable to occur in them, with risk of damage to pipe lines and valve gear, due to the release of kinetic energy of the heavy moving mass when the withdrawal of pressure water is suddenly interrupted. In new installations their use has been almost entirely abandoned in favour of the pneumatic type which has undergone a great deal of improvement in recent years. The majority of those now employed are of the piston-less design, in which there are no moving parts within the pressure vessels and control is done externally. A schematic drawing in Fig. 72 serves to follow the principle of working of one of these. This shows a forged steel water-bottle (1) into which water is delivered by the pumps and from which it can be withdrawn as required by the extrusion press. Load is applied to the water by air compressed in a series of air bottles (2). The automatic external control system consists of a U-shaped vessel (3) containing mercury which has one limb connected to the bottom and the other limb to the top of the water bottle, so that a difference in level in the mercury in the two limbs is established which is due only to the head of water in the bottle. Rise and fall in the level of mercury in the left-hand limb with the supply or delivery of pressure water from the bottle causes the making or breaking of a series of electrical contacts arranged at different levels, and so operates controls on the pressure pumps. A contact is also provided for the functioning of a safety stop-valve in the event of the water level falling to the point where air may be carried into the pipe line. The make and break circuit also gives visual indication of the water level in the bottle by lighting or extinguishing a series of lamps at (4). A large installation by Hydraulik, comprising two water and six air bottles is seen in Fig. 73. The advantages of this and similar methods of control over those based on the internal pressure of the accumulator, which is liable to be affected by temperature variations and provides no trustworthy criterion of the amount of water in the bottle, are obvious. One disadvantage of pneumatic

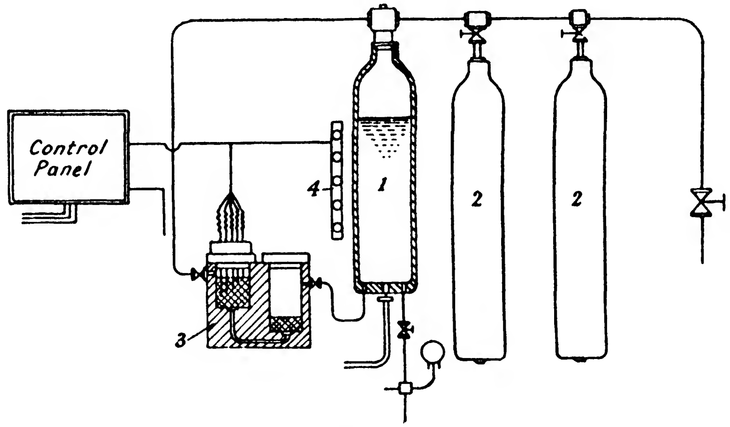

Fig. 72.

accumulators is that when the water is at its lowest level in the bottle, which, when a single extrusion press is being worked, will be towards the end of the extrusion stroke when a high pressure is often needed, the actual pressure available is slightly reduced due to the expansion of the compressed air; they should therefore be given sufficient capacity to keep this variation within 10 per cent. Quite commonly, however, several presses are supplied from one large accumulator, which reduces pressure fluctuations.

In the cycle of press operations, idle movements occupy a considerable part of the motion of the main ram and it is uneconomical to use pressure water for these; a low-pressure system is incorporated for this purpose. At the end of an extrusion the main ram is retracted by withdrawing pressure from the backs of the drawback rams, which are normally of the constant pressure type working off the high-pressure supply. The water in the main cylinder is pushed out into a vessel partly filled with compressed air. As the water level in this vessel rises, further compressing the air, a release valve opens at a fixed pressure to allow the escape of excess water. The working pressure in the air vessel is generally 40–60 lb. per square inch. To advance the main ram for a new extrusion, pressure is restored on the drawback rams, and the low-pressure water in the air vessel can then move the main ram forward rapidly until resistance is encountered by the extrusion ram coming against the billet, whereupon the control valve is moved to admit water into the main cylinder from the accumulator. There is no danger of air entering from the air vessel, since during the return stroke there enters it not only the filling water supplied for the idle stroke, but also the water supplied by the accumulator during the power stroke, and thus a certain excess of water must pass the overflow valve on the air vessel at each cycle.

The speed at which some sections in copper alloys and the high-strength light alloys in particular are extruded is of great importance, and this calls for special throttling valves, capable of giving determined speeds on the main ram, which may range from as low as 0·04 in. per second, to a maximum of 8 in. per second. The application of corrosion-resisting steels for the internal parts of valves has been a major point in diminishing their erosive wear.

Heating the Container. Hot billets introduced into a container which is at a lower temperature, cool during extrusion to an

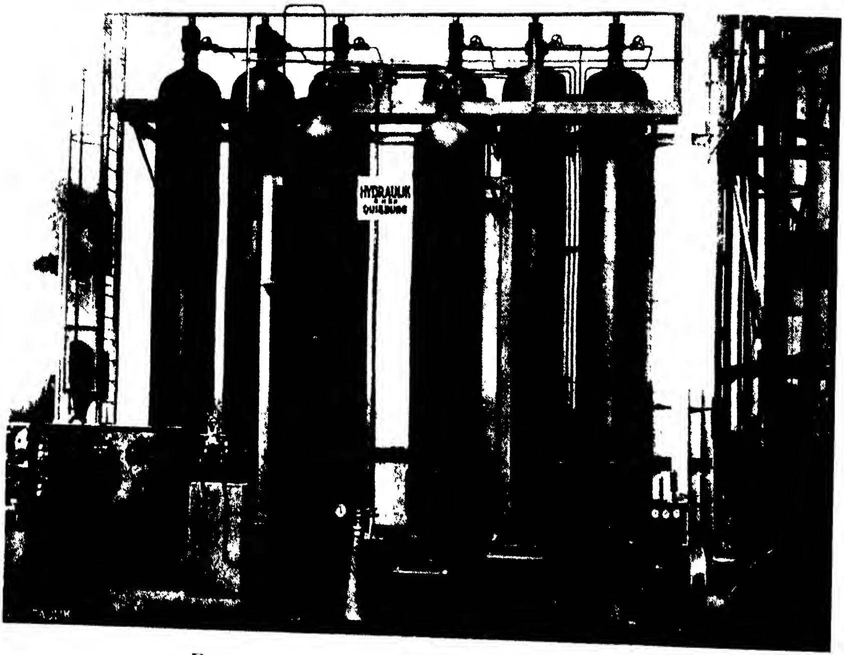

FIG. 73.—Large pneumatic accumulator by Hydraulik.

[*Facing page* 9

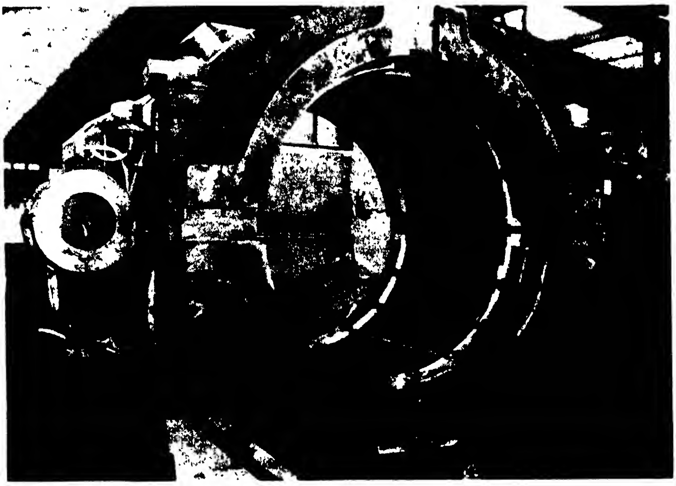

FIG. 74.—Container heating by resistance panels inside the container-holder.

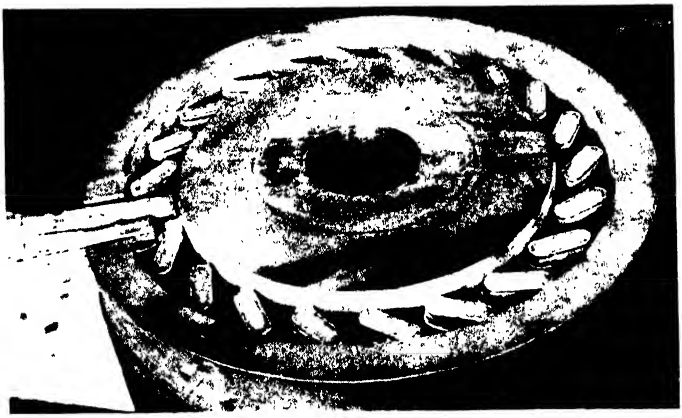

FIG. 75.—The Schloemann system of container heating by induction.

extent depending on their size, the time required to complete the extrusion, and the difference in temperature existing between the two. Even in presses not specially provided with a means of heating the container, the latter is by no means cold, since it becomes warmed by the passage through it of successive billets. In order to avoid chilling the first billets excessively when starting up from cold, the container is heated by the introduction into the bore of a gas burner or electric resistance heater, or by leaving a hot billet in it for a few minutes. The extent to which additional heating is necessary depends on the extrusion qualities of the metal concerned and on the capacity of the press to carry out the extrusion in as short a time as possible. In those cases where the speed of extrusion must be kept low specially heated containers are essential. The ordinary hot-working brasses which require comparatively low extrusion temperatures, and possess a long working range, do not require any special measures, though there is reason to think that a higher container temperature would not be without benefit in reducing the incidence of the extrusion defect by decreasing the temperature gradient from the centre to the outside of the billet as it lies in the press, and would also be conducive to greater uniformity in mechanical properties over the length of the extruded section. With more difficult alloys, such as some nickel-silvers, cupro-nickel, and monel, additional heating of the container to raise it to 300°–350° C. becomes necessary. This is also particularly the case for most of the strong aluminium and magnesium alloys, which are only extruded satisfactorily at very low rates. The latter remain in the container for considerable periods, and they therefore require that the temperature of the container should be maintained within close limits in the region of 380°–400° C. Vertical presses lend themselves to high rates of production and, on that account, even small billets of stiff copper and nickel alloys can be dealt with without providing container heating.

The heating of containers is done either by gas or electrically, the latter being the chief method for light alloy presses. Gas burners are arranged in rows within the jacket space formed between the container and its holder. Graham [4] refers to the use, in a large press for extruding nickel alloys, of hot waste gases from a near-by billet heating furnace which are led through a duct and made to circulate within the container jacket. Electrical heating, often in conjunction with automatic regulation of the temperature, is generally preferred in light alloy shops, because of the greater precision in control and more uniform distribution of heat. The usual method is to fix resistance panels, backed by thermal insulation, on the inside of the container holder, as shown in Fig. 74. Containers heated by electric induction have been brought into use in recent years; Fig. 75 shows the Schloemann system in which current with the normal frequency of 50 cycles is passed in series through a set of insulated copper rods in longitudinal holes drilled in the container body. Low voltage current in ranges from 30 to 80 volts, or 50 to 100 volts, is taken from a transformer. The temperature is controlled by thermostat. Heating up a replacement container from cold to 400° C. occupies 6 to 7 hours, but this can be done before fitting. Due to the cost of drilling the containers, the method is expensive and has been used hitherto only on light alloy presses, where the container temperatures are high. It has the advantage that since heat is developed within the container, stresses due to thermal gradients, which play an important part in determining its life, are much reduced. The French Morane press may be fitted for induction heating by means of a water-cooled induction coil round the outside of the container.

Billet Preheating Furnaces. Smooth working of the extrusion process requires the supply to the press of billets which are heated throughout to a uniformly plastic condition, and frequently involves the control of their temperature within narrow limits.

The preheating furnace which is principally used for copper alloys is of the " roll-down " type. In this, taking advantage of the invariably circular cross-section of the billets, they are placed one behind the other on a hearth which is slightly inclined to the discharge end, so that as they are successively withdrawn, the remainder roll forward and cold ones are fed in at the top end (Fig. 76). The simplicity of construction and absence of moving parts make this furnace cheap to build. By their revolution the billets are evenly exposed to the source of heating which is done rapidly by fuel firing, using gas or oil burners. The high billet temperatures now required for alloys which can be only extruded at temperatures in the neighbourhood of 1100° C., has stimulated the design of other types of furnaces. In one of these, for example, which operates automatically, the billets rest on refractory covered trays which are pushed by pneumatic rams through successive zones of higher temperature into which the furnace is divided. More attention is being paid to securing better heat distribution by employing special systems of combustion, and the control of furnace atmospheres is also receiving more consideration in a number of cases.

The special problems involved in the preheating of aluminium alloys have caused the adoption of new methods. The main object to be secured is uniform soaking of the billets, some of them of very large size, to bring them to a closely controlled temperature. Electrical resistance heating of the furnaces, with thermostatic regulation of temperature, has been most widely employed for the purpose, though firing with town gas has been successfully used in some designs. While electric roll-down furnaces are much used abroad, they have disadvantages for heating these alloys which are not easily overcome. For instance, the greater coefficient of friction of aluminium as compared with copper alloys renders the feeding forward of the billets uncertain even when steeper hearths are provided ; side doors through which the billets can be urged forward by hand interfere with the arrangement of the resistors, and are dangerous unless the power is cut off whenever they are opened. In England, resort has been general to mechanical means of conveying the billets through the furnace, with the object of making their travel as positive as possible. Only

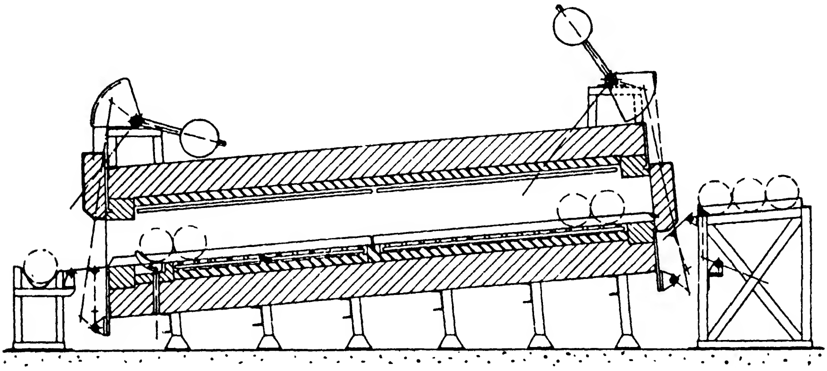

FIG. 76.—Billet preheating furnace of the gravity feed type.

(*Courtesy of " Metallurgia."*)

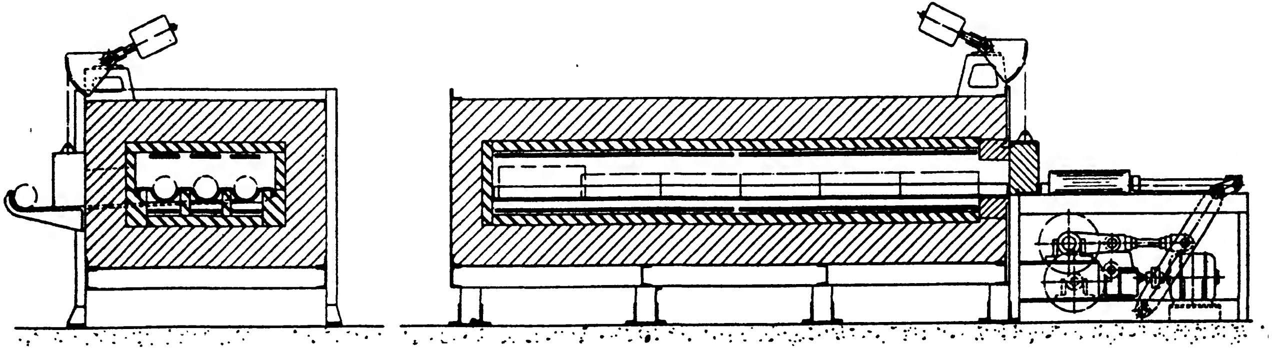

FIG. 77.—Pusher-type preheating furnace.

(*Courtesy of "Metallurgia."*)

brief reference to these developments can be made here, but the relative merits of modern conveyor systems for light alloy billets has been fully discussed recently by Lindner.[5]

Attempts in the first place to supersede gravity feed by the introduction of pneumatic or hydraulically driven pusher mechanism operating from the charging end, which act on billets lying lengthwise in longitudinal grooves in the hearth plates (Fig. 77), have not been satisfactory. This is due to high friction against the hearth plates requiring much power to be used, and the consequent danger of damaging the soft billets. In a recent modification the billets are carried on shoes sliding on rails in the hearth.

The greatest success has attended the use of conveyor-type furnaces. A system, which can be selected as an example, from which good results have been obtained, is shown diagrammatically in Fig. 78. The conveyor, comprising a number of mild steel strands for temperatures up to 500° C., travels entirely within the furnace and so avoids loss of heat. The shaft of the driven drum at the discharge end of the furnace is taken through the wall and carries outside a pair of ratchet wheels which are operated electrically by means of levers and blocks as may be seen in Fig. 79. Aluminium has a low absorptive capacity for radiant heat and it is therefore necessary to increase the transfer of energy by vigorous agitation of the air in the furnace. The diagram shows the method of obtaining directional air flow over the billets at roughly 30 ft. per second by means of a multi-blade centrifugal fan. The heater elements are mounted in the roof of the furnace, and a suitable baffle is placed so as to direct the air stream. Automatic charging gear, in this case, comprises a hoist interlocked with the door gear, so that when the door lifts the charging cradle is hoisted and a billet is gently tilted into the furnace. At the discharge end a receiving cradle is provided inside the furnace, and this, when depressed by a billet, automatically opens the circuit of the charging and conveyor gear.

The tilting cradle inside the furnace is interlocked with the discharge door. When the door, which is electrically operated, is opened, the tilting cradle discharges the billet which runs out into a receiving trough, whence it is picked up and transferred to the extrusion press. A furnace of this type, dealing with billets 20 in. in diameter, and 48 in. long, which is in operation, has an

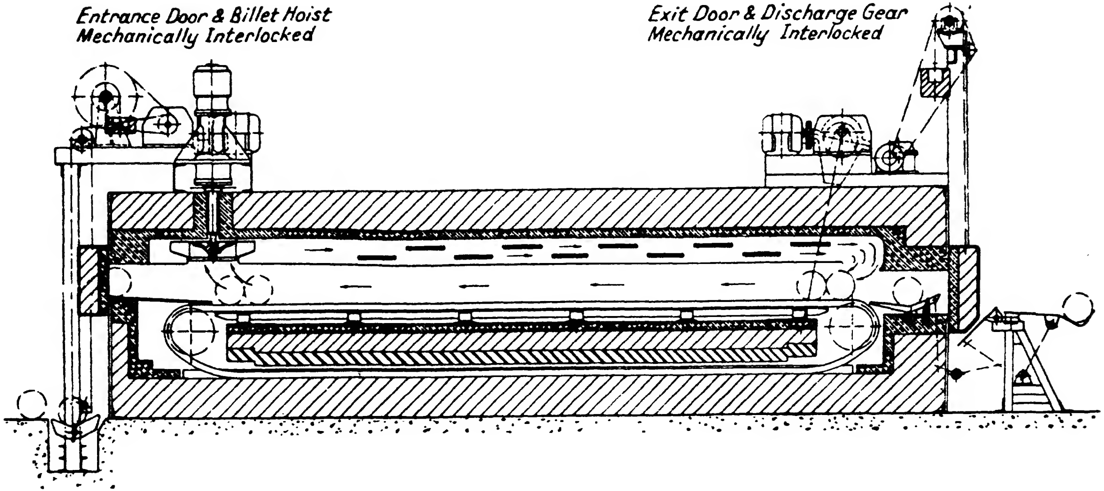

FIG. 78.—G.W.B. conveyor-type furnace.

FIG. 79.—G.W.B. furnace for preheating billets of aluminium alloys.

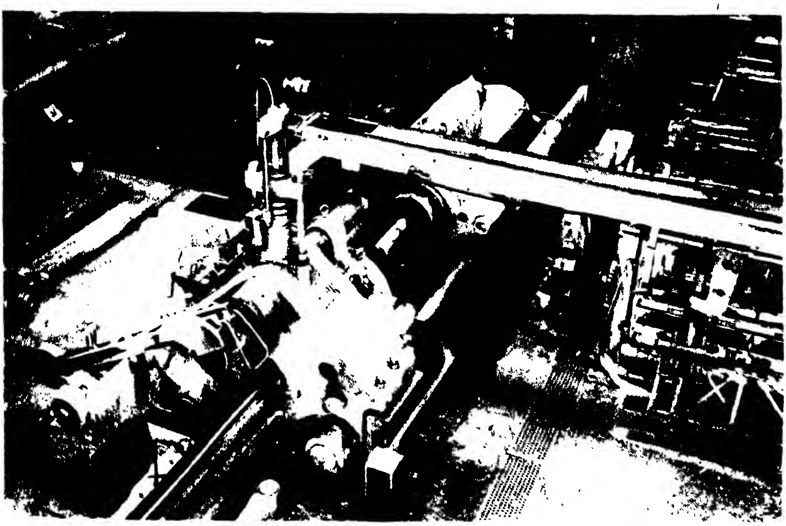

FIG. 81.—Fielding and Platt press of 2000 tons, showing the billet conveyor.

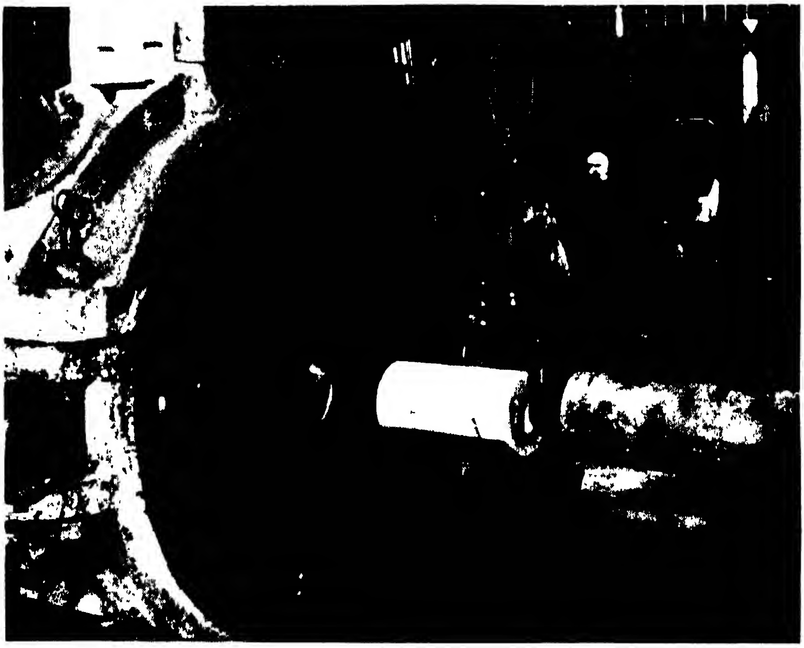

FIG. 82.—Billet on conveyor arm about to be inserted in the press container.

(*Courtesy of Reynolds Tube Co.*)

output of 3 tons per hour. Several other interesting forms of conveyor furnace have been brought into operation to which adequate discussion can not be given in a brief account.

In transferring billets from the furnace to the press container, the smallest ones are simply carried in hand tongs; rather larger ones requiring the aid of an overhead chain sling. With heavy billets some form of conveyor is necessary, of which there are several patterns in use. Inclined roll-ways are often used. The sketch, Fig. 80, shows one of these in combination with a mechanical arm which places the billet on the press cradle in front of the container. In one modern plant, a bogie running on rails is used to carry billets weighing half a ton. These are carried on the bogie in an overhung position so that they can be brought to the press centre. Another type of mechanical conveyor can be seen in Fig. 81. In a similar one shown in Fig. 82, the roller arm pushes the billet off the conveyor cradle into the container.

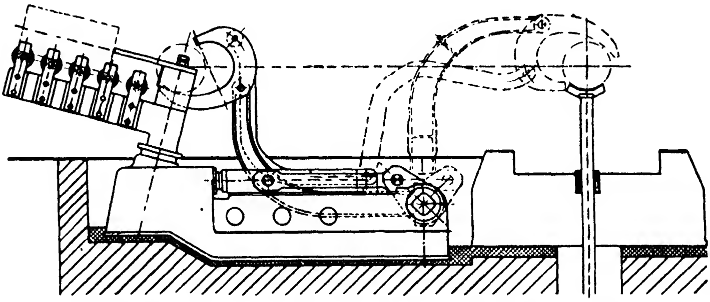

FIG. 80.—Mechanism for conveying billets from furnace to cradle of press.

REFERENCES

[1] S. Plankensteiner. Metal Rod and Tube Presses and Their Tools. *Stahl. u. Eisen*, 1936, **56**, 1497–1504.

[2] P. Bernhoeft. The Operation of a Directly-driven 1500-ton Press. *Z. für Metallkunde*, 1932, **24**, 210–13, 261–3.

[3] R. Worsdale. The Manufacture of High-Strength Light-Alloy Extrusions. Assocn. of Engineering and Shipbuilding Draughtsmen. Pamphlet. 1938.

[4] A. B. Graham. Developments in Alloy Sections and Tubes for Marine Engineering. Inst. of Engineers and Shipbuilders of Scotland. 1938.

[5] H. G. Lindner. Developments in Electric Billet Heating Furnaces for Extrusion Presses. *Metallurgia*, 1939, **20**, 53–6.

CHAPTER V

FLOW IN METALS DURING EXTRUSION

THE properties and, in particular, the quality of extruded metals are influenced in a decided fashion by the manner in which the metal flows during the process to take up its final dimensions in issuing from the die. By the study of this flow, and by observing how it is affected by variation in the conditions of operation, a great deal of valuable information can be derived regarding the degree and distribution of the deformation undergone by the metal in different parts: it is also chiefly by such means that it has been possible to assign the cause to certain of the defects which are peculiar to extruded metals. There seems no reason to doubt that metals undergoing all kinds of deformation adapt themselves to the new shape in a manner which resembles the flow in liquids, following a streamline course of flow determined in accordance with the geometrical conditions. The plastic deformation which occurs during extrusion is basically no exception to this, although the flow generally shows very considerable departures from a simple streamline form, partly owing to strong frictional effects, and partly because the billets, for various reasons, are not invariably in a uniformly plastic condition throughout. In the result, the flow sequences become extremely complex and are difficult to interpret, the more so because some of the factors to which they are subject are only imperfectly understood. However, there is sufficient data available from numerous investigations to make the main outlines of the problem reasonably clear, and to allow the flow which takes place in the extrusion of such simple shapes as plain cylindrical bars and tubes to be reasonably well understood.

Methods of Studying Flow. The investigation of flow phenomena in metals during deformation originated in the classical work of Tresca[1], whose long series of experiments demonstrated the essential plasticity possessed by many crystalline bodies. His studies included the deformation of billets made up from superimposed lead discs when forced through a die. It is interesting, too, to record his attempt to extrude heated discs of wrought iron through a die by repeated blows from a steam hammer.

It was not until about the period of the war (1914–18) that serious attention was attracted to the course of flow in technical extrusion processes in the attempt to discover the origin of defects in extruded materials, then disturbingly frequent in their occurrence. In a research published in 1918 Schweissguth [2] gave what has turned out to be the proper explanation of one of the most serious of these troubles, though without being able to offer any satisfactory means of overcoming it. Since that time much ingenuity has been shown in devising improved methods of identifying the flow process.

One of the commonest methods is simply to macro-etch longitudinal sections of billets after they have been extruded to different residual lengths. This has the advantage of being easy and quick to do, but the picture presented by the distorted crystal structure leads to no more than a general qualitative understanding of the flow process. In an attempt to trace the actual path followed by individual parts of the original billet, Schweissguth prepared brass billets through which rods of brass of slightly different composition were inserted longitudinally, so that differentiation between the two could be obtained by etching subsequent to partial extrusion. Doerinckel and Trockels [3] also used composite billets, building them up from brass discs separated by thin sheets of a second brass, which was used, too, for the longitudinal bolts holding the discs together. Besides those consisting of transverse discs, Schmidt [4] had further resort to billets made up with concentric cylinders alternately of magnesium and 5 per cent zinc-magnesium alloy. In laboratory experiments composite billets have been much used. Several investigators [5, 6, 7] have recorded observations made from experiments with layered billets of coloured wax, and of plasticine; while Unckel [8], using mixtures of chalk, beeswax and vaseline, to which colouring matter was added, created billets consisting of cubical units of different colour, from the ultimate distortion of which in sectioned residues, deductions could be made regarding the distribution of flow.

By far the most satisfactory method is that by which an ordinary cast billet, after first being accurately cut longitudinally into two equal halves, has a co-ordinate net or other pattern inscribed on one of the cut faces (see Fig. 83). The two halves are then put together and secured, during preheating, by bands which are later removed when the billet is inserted into the press container. It is essential that the assembled halves fit the press closely so that the plane of separation lies in the axis of the container. For a die of circular aperture which is also axially placed, the conditions are symmetrical, and tangential displacement of metal across the plane of separation can not occur during extrusion; the billet therefore behaves as though it were uncut. After carrying extrusion to the desired amount, the remaining part of the billet can be removed from the press and both it and the rod extruded from it are then easily broken apart by a light blow. The distortion of the original pattern now affords a ready and accurate means of tracing the course of flow and one which is capable of quantitative examination. This important method appears to have been applied first to the study of the cold drawing operation by Zagorski[9], and in the observance of geological phenomena by Riedel[10]. Its application to extrusion was made later by Siebel and Hühne[11], and by Sachs and Eisbein[12]. Several means of applying the pattern have been adopted. Sachs and Eisbein cut a rectangular system of fine grooves on the prepared faces of copper and brass billets, which were filled in with a mixture of clay and graphite. On large billets of aluminium, Unckel[13] cut grooves 5 mm. deep, 2 mm. wide, and spaced 20 mm. apart, into which he hammered strips of 1 per cent copper-aluminium alloy, finally rubbing the prepared faces with graphite and clay to ensure their easy separation after partial extrusion of the billet. For the final examination of the flow, the residue of the half-billet carrying the inserted strip was smoothed with emery and then etched with concentrated hydrochloric acid to blacken the alloy strips. An adaptation of the method used by the author[14] for small billets of lead, tin, aluminium, etc., consisted in inscribing the required pattern with printer's ink on one of the billet halves, which were then wired together tightly. Even on aluminium billets heated to as high as 600° C. for extrusion, this has proved satisfactory, since the close contact between the surfaces preserved the pattern from destruction by heating.

Examples of Flow in Direct Extrusion. There will be considered first of all the results obtained from the extrusion of small billets in a laboratory type of press. This has the advantage that the conditions can be made fairly simple and are well defined. If attention is confined to the flow of metal through a cylindrical die with square shoulders, which is the one most frequently used in extrusion, then there can be selected for description three kinds of flow sequence which typify the behaviour in the direct process of extrusion.

Type A. (Fig. 83) shows the distortion of the net pattern of a billet of tin after extruding by 66 per cent of its initial length. In producing this, it is to be noted that the billet and the press itself were heated to a uniform temperature of 100° C., and this was held while the extrusion was performed. The container had a smoothly finished surface and was lubricated with oil and graphite. The die aperture is large to help in following the distortion of the pattern, but this does not affect the general features which are the same when a greater reduction is employed. It is apparent that the billet has moved easily through the container, undergoing no deformation until the metal comes within a short distance of the die. There the centre part travels forward more rapidly than the sides, which are held back under the shoulders of the die. Next to the latter, the units of the first outer ring of pattern elements have become stagnant, and between this dead zone and the outer elements further along the sides of the billet there has developed a funnel-shaped region in which deformation is severe. As the side units enter this zone, they are first of all compressed and then pass diagonally with heavy shearing into the die to constitute the outer part of the extruded bar. The general effect, therefore, is that whereas the centrally-lying elements undergo a minimum of deformation by pure elongation which corresponds with the actual change in cross-section between the billet and the bar, the outer units have experienced much additional working and are stretched out along the sides of the rod, lying well in rear of the centre ones with which they were initially horizontally aligned. It will be seen that the front end of the bar differs from the remainder in having received slight working. It consists of the pattern units which lay, to begin with, directly opposite the die orifice and so have not had to pass through the deformation zone at the approaches to the die. This short length, in which the cast structure of the billet is more or less completely preserved, soon gives way to material which, in the longitudinal sense, has had approximately uniform working. Extrusion carried beyond the stage shown in Fig. 83 produces no new features until the back end of the billet comes within the deformation zone. This happens when the billet has been reduced to a disc of thickness about one-quarter of its diameter. The rapid inflow directly under the die aperture, made apparent by the upcurve of the transverse lines of pattern in Fig. 83, creates a tendency for a hollow funnel to be formed in the middle of the base, which develops increasingly if the extrusion is pressed as far as it will go: the back end of the bar thus becomes unsound over a short length (see Fig. 84).

Siebel and Hühne have applied a method of analysis based on the distortion of a co-ordinate net pattern to flow during extrusion of the type just described. This begins with the consideration that the deformation in an element bounded by mutually perpendicular faces can be resolved into a deformation normal to the faces, and superimposed shear strains. If the boundaries of the element are so selected that two opposite faces lie perpendicular to a direction of stress—as happens if a face lies in a plane of symmetry—then shear is only possible in planes normal to the limiting surfaces and investigation is made simpler. It has been seen in Fig. 83 that the deformation during extrusion is such that only in the vicinity of the axis of the bar has it occurred as a simple elongation, corresponding to the reduction in area from the billet to the bar. The pattern units lying off the axis must necessarily have undergone equal elongation, but have also experienced additional shear deformations which are very severe towards the outside of the bar. Thus a total deformation is produced in them which is considerably greater than that at the axis. Now the deformation suffered by an object during shaping can be assessed from a comparison of the initial and final dimensions of the object only if parallel-walled elements continue to have plane parallel faces after deformation. The fact that here only the axially placed elements show such parallelepipedial deformation is an indication of extra deformation having occurred which can not be estimated from the external dimensions of the bar, and represents an internal loss of work which must have an effect on the force required to cause extrusion, making it greater than that theoretically required.

The extent of the additional deformations in extrusion has been calculated for some simple cases by reference to the deformation of spheres located within each cubical pattern unit, which participate in their distortion, becoming converted into ellipsoids, the principal axes of which characterize the changes in form which have been

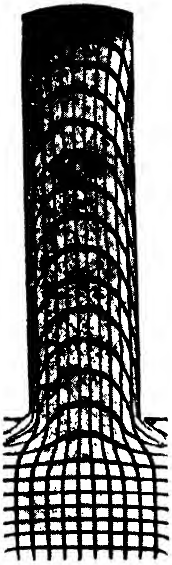

FIG. 83.—Flow shown by distortion of co-ordinate net pattern. Direct extrusion of tin at 100° C., using lubrication.

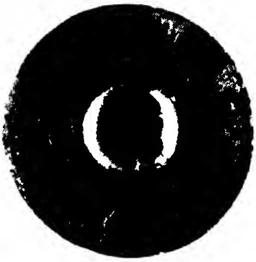

FIG. 84. —Funnel formed in rear end of billet residue if extrusion is carried to full extent.

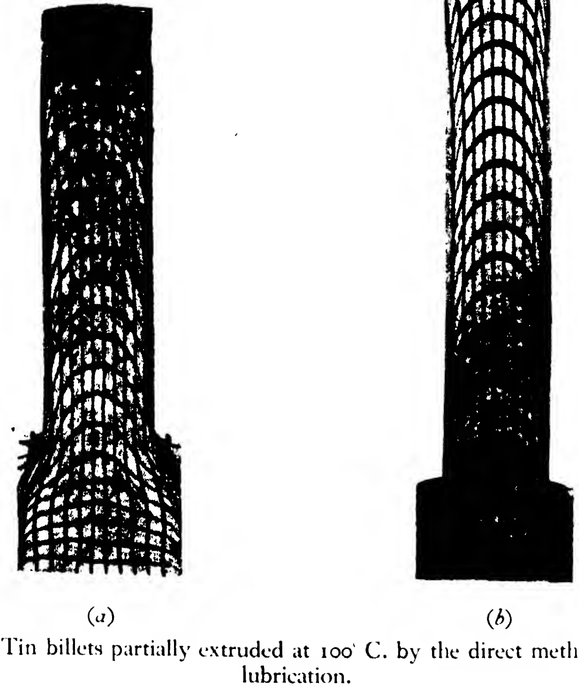

(*a*) (*b*)

FIG. 88.—Tin billets partially extruded at 100° C. by the direct method, without lubrication.

[*Facing page* 102.

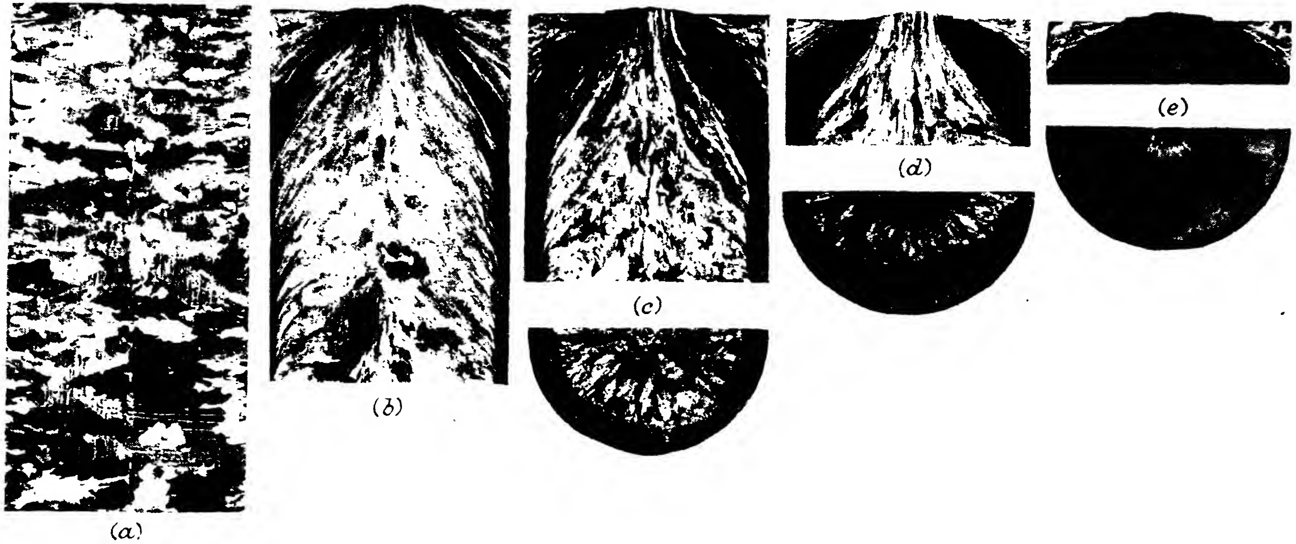

FIG. 87.—Etched sections of partially extruded billets. Direct method, showing flow of type B.

produced. The spheres can be regarded as being transformed first by a deformation which corresponds with the alteration of the external dimensions of the whole body into ellipsoids whose long axes coincide with the axis of the bar, and these then being converted into the final form by shear displacement through an angle which is greater the further the distance from the central axis of the rod (Fig. 85).

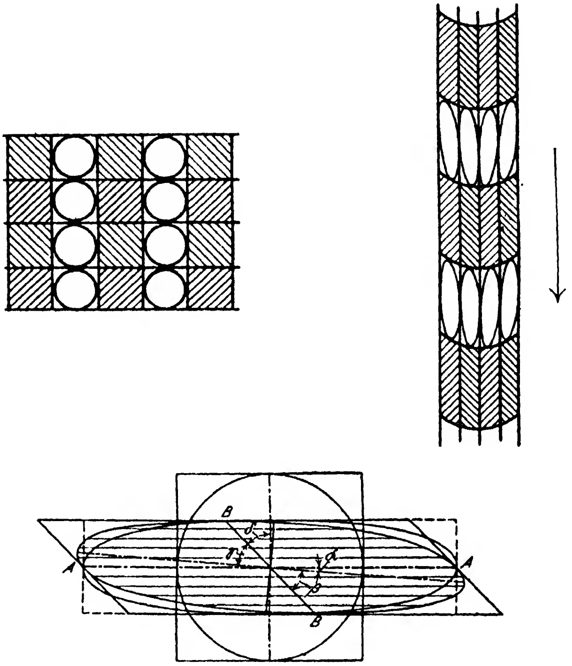

Fig. 85.

The results of their experiments along these lines on billets of lead, using different dies to give extrusion ratios of 2, 3 and 4, are reproduced in Fig. 86. The lower curves show the distortion of a transverse set of pattern elements in each case, while the upper curves show the calculated deformation undergone by each element. The outstanding fact emerging from this is that even in these cases, where the flow is relatively simple, the deformation close to the surface of the extruded bar has been approximately double that required for pure stretching such as the centre has undergone. As it will be seen later, this lateral difference can be much greater in practice.

Type B. The etched billet residues in Fig. 87, and those in Fig. 88,* on which the net pattern method was used, were obtained in experiments with bismuth and tin respectively, for which the only variant from the preceding case lay in the omission of lubrication; the container being used with a dry emeried surface. A uniform temperature was again held during extrusion. The general features of the last type are reproduced with the addition that the restraining effect of friction has led to heavy shear all along the sides of the billet close to its surface. This sheared region is continuous with that under the die shoulders. The effect is to increase the rate of travel of the centre part into the die relatively to the metal at the outside, and to augment the severe deformation of the outer layers of the bar. Apart from this, over the greater part of its length the extruded bar preserves the same general features as in the preceding type A. In the later stages, the effect of the continued shearing of the billet past its peripheral layers causes the latter to build up at the rear end of the billet in front of the advancing pressure disc, and, when the billet has become reduced to about one-third of its first

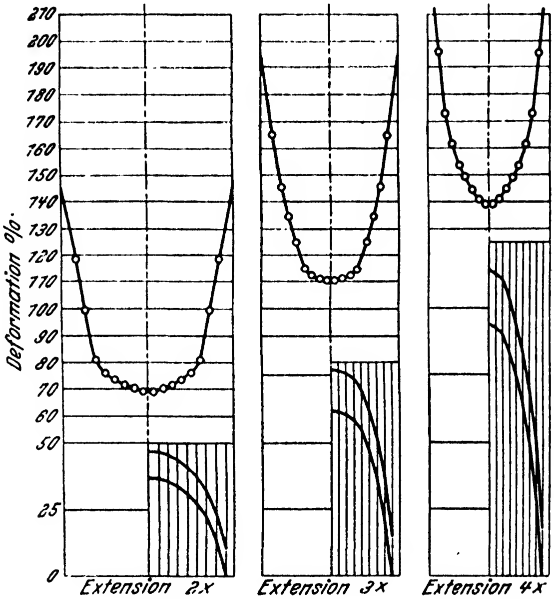

FIG. 86.—The amount and distribution of deformation in extrusion calculated by reference to the distortion of spherical units.

---

* Facing page 102.

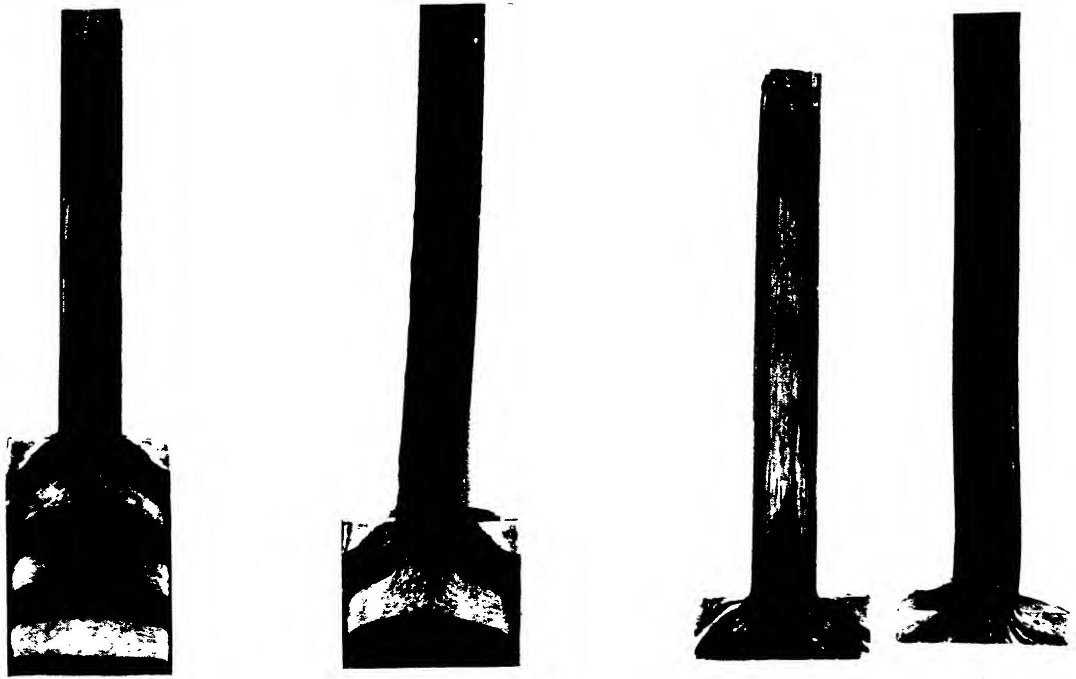

FIG. 89.—Flow in the direct extrusion of tin at 100° C. as shown by distortion of transverse banded pattern.

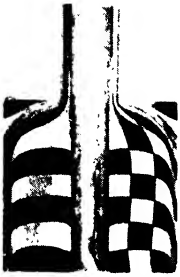

FIG. 90.—Tube extrusion, direct method, using polished mandrel, but without lubrication.

FIG. 91.—Irregular flow in direct extrusion caused by trace of lubricant.

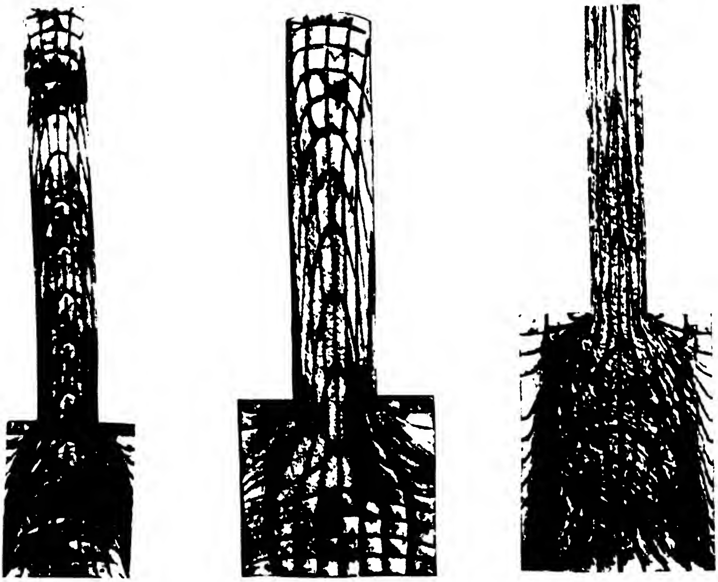

(*a*)
Copper billet of circular section
($\frac{1}{12}$ nat. size).

(*b*)
Copper billet of hexagonal section
($\frac{1}{8}$ nat. size).

(*c*)
Hard brass billet of circular section
($\frac{1}{8}$ nat. size).

FIG. 92.

length, this accumulated material bulges inwards and begins to affect the deformation of the metal in the centre (see Fig. 88 (*b*)). Ultimately the bulges come right in and, as shown in Fig. 87, reduce the more lightly worked core to a narrow cone, so that the last 10 per cent or so of the extruded bar has a heavily deformed outer ring which extends almost to the middle. A point to be noted here is that these changes do not, in this case, begin to effect the structure of the issuing bar before the billet has come down to a disc of roughly one-fourth of its diameter in thickness, as may be seen in Fig. 89. Now it is important that the possible ways in which the displacement of the billet through the container may take place in direct extrusion should be clearly understood. It may occur, as seen in type A, by the overcoming of the interfacial friction between the billet and the container. This may be expected to depend on the conditions at the interface. With smooth, lubricated surfaces it occurs easily. Without lubricant, the roughness of the container and the coefficient of friction between the metals tend to control the facility of translation, and a point is reached at which the friction resistance exceeds the shear resistance of the hot metal. In that case part or all of the displacement of the billet occurs by shear in its surface layers leaving the skin clinging to the wall of the container. In the examples shown in Figs. 87 and 88 shearing has predominated over sliding, as it has also in Fig. 90, as can be seen by tracing the history of successive chequer units on the right-hand side. The left side of this billet was given a different pattern consisting of transverse bands. Incidentally this photograph, which applies to the extrusion of a tube, also shows some effect on the flow caused by the friction at the surface of the mandrel, which had been polished. Under practical conditions of extrusion, too, it is usual for the skin of the billet to be immobile, and it would seem more correct then to refer the force needed to move the billet through the container to that required for internal shear than for overcoming friction. This should be borne in mind where further reference to this question is made later and formulae are suggested in which friction coefficients are introduced. Nevertheless, flow of an intermediate type between A and B, in which sliding and shear are combined, can be produced experimentally and also occurs in practice. The extrusion of a metal which is stiff and has a high shear resistance will tend to lead to sliding. A trace of lubricant on one side of a billet is sufficient, as shown in Fig. 91, to alter the flow and leads to an eccentric pattern. The significance of the above remarks in relation to the origin of defects will appear shortly.

Two points to be mentioned are that the examples shown are the outcome of trials with metals of low melting-point, such as lead, tin, and bismuth, for all of which the flow under similar conditions was found to be identical. Moreover, the extrusion of particular metals at widely separated temperatures did not affect the manner of flow so long as the temperature in the billet was uniform.

Type C. The flow experienced in the previous cases is not representative of that which occurs in the majority of instances in technical extrusion, though it is typical of some, as will be seen later. A very significant difference which is generally found can be illustrated by considering the flow process of the hard brasses. Fig. 92 (*c*) shows the half-section of a large billet removed from an ordinary industrial press after partial extrusion, and Fig. 93 a similar billet which has been macro-etched. The first thing to notice is that the zone of shear formed by the displacement of the centre through the outer part retained by friction, is now at a greater depth below the surface and is more broadly diffused, leaving a fairly thick rim of dead material extending down the sides from the stagnant zone under the shoulders of the die to the back of the billet. As the extrusion ram advances this rim is gathered up in front of the pressure disc and bulges in towards the centre to take the place of the rapidly flowing metal there. In a later stage this material is enfolded and projects tongues into the centre stream, which enter the die and form part of the bar over as much as 30 per cent of its length, at the back end. The whole sequence is very well shown in Fig. 94, for which Schmidt used billets 6 in. in diameter, made from concentric cylinders of magnesium and 5 per cent zinc-magnesium alloy. The accretion of the dark-etching outer zone at the back corners and its eventual intrusion into the bar is very apparent. It will be seen that the chief difference between types B and C consists in the retention, in the latter, of more material along the sides and its much earlier intrusion, from the back end, into the die.

The Extrusion Defect. The opportunity can be taken here to refer to a characteristic fault which, under the name of " the extrusion defect " or " piping ", has long been well known in copper alloys, but to which other metals are also susceptible. This can

Fig. 93.—Etched section of hard brass billet, 40 per cent extruded.

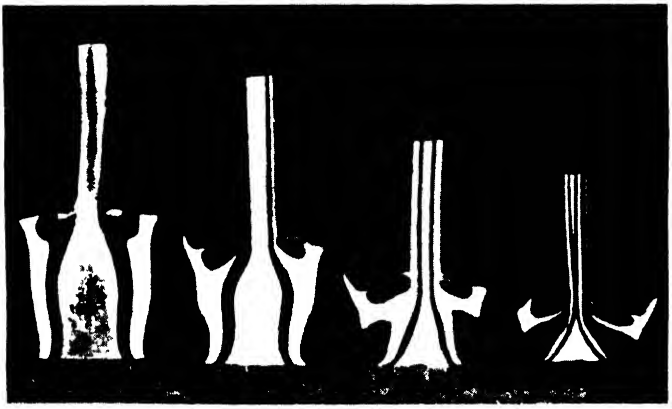

Fig. 94.—Composite billets, showing enfolding at rear corners. Direct extrusion, flow of type C.

[*Facing page* 100.

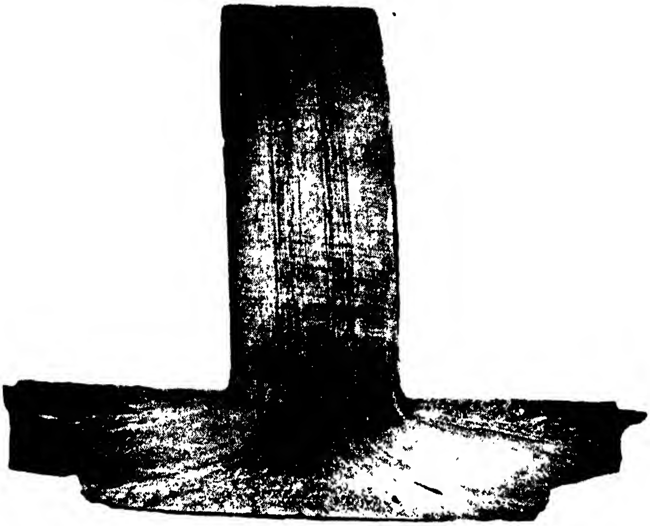

FIG. 95.—Extrusion defect entering at back end of an extruded bar.

FIG. 96.—Section of fuse rod, with loose core resulting from extrusion defect (Genders).

definitely be associated with flow of type C, is slight or absent in type B, and does not occur at all in type A.

It is still sometimes confused with defects of a different origin, but its real nature, first explained by Schweissguth, and amply confirmed by Genders[15] and other workers, must be regarded as being beyond doubt. Although its incidence has been greatly reduced, constant vigilance is still needed to avoid its inclusion in material passing into service. The defect has its genesis in the oxidized skin of the billet. This constitutes part of the material which, as just described, becomes enfolded during extrusion at the rear corners of the billet. The actual path followed by the unsound metal can be seen in Fig. 95. It takes the form of a funnel closing in from the corners and continuing into the die as a tubular fault. In the bar, the defect appears in section as a partial or complete annulus which, wide at first, becomes of less diameter as the back end of the bar is approached. It is marked by the presence of drawn-out fragments of dross and oxide. Fig. 96 shows a bad case in which the core of the bar is detached from the outside. The defect is most apparent in larger sizes of bar, and is more attenuated in thin sections and tubes. Its presence to any serious extent greatly impairs the quality of the metal for most purposes.

A further consequence of flow of type C, which should be mentioned here, although it will be referred to more fully in connection with the properties of extruded metals, is that the working of the product over its length is nowhere near as uniform as in the other types. At the back end, and extending roughly over a third of the total length, the metal is subjected to an intense and complex deformation except near the axis of the bar. As the back end is approached metal which has undergone very severe working, often, as mentioned below, at a lower temperature than elsewhere, comes to occupy more and more of the cross-section, extending finally almost to the centre of the bar.

Several explanations have been advanced to account for flow taking the course it does in type C, in contrast with type B in the experimental billets. An obvious difference lies in the temperature conditions. For instance, in the extrusion of copper alloys, the strongly heated billets are placed in a cooler container so that the outer layers are chilled and therefore become relatively stiff. This will accentuate the tendency for the centre part of the billet to be displaced through the outer portion and will therefore increase the liability of the harder chilled rim to be turned in at the back of the billet. The temperature gradient between the centre and outside will also cause the shearing displacement between the two parts to occur at greater depth below the surface, and so leave a thicker rim of metal along the sides. That such a modification of the flow can be caused by the temperature factor alone can be demonstrated. Fig 97 represents a billet of tin, extruded at 100° C. from a cooler container at 30° C., the flow pattern of which is closer to Fig. 92 (*c*) than to Fig. 88 (*a*). In agreement with this result, it is a matter of experience that the proportion of defective material is lower when working with a hot press and when a rapid rate of extrusion is used. The defect is however encountered acutely in the extrusion of high strength aluminium alloys for which the press container is held at a temperature only slightly below that of the billet, and this points to the fact that variable plasticity arising from unequal temperature distribution is not the sole determining factor and that other causes must be found. In this connection, the very strong adherence of aluminium to the wall of the container, and the high coefficient of friction of aluminium, may be significant. Although no evidence of it was found in experiments with pure metals, there is some reason to believe that under similar conditions of extrusion, some alloys flow differently from others. Sachs and Eisbein have demonstrated that, when extruded from the same press, hard brass showed flow of type C, and copper of type B (cf. (*c*) and (*a*), Fig. 92). This also receives support from Crampton's[16] statement that high copper alloys, consisting entirely of the α phase, are little subject to the central extrusion defect, but are apt instead to be unsound at or just below the surface skin of the extruded parts; the latter form of fault, as will be seen shortly, may originate when flow follows type B. It is possible that this difference has its cause in variability of properties within the billets. In alloys which have a heterogeneous structure, the constituents in the outer layers may differ in quantity and size from those in the core, due to the conditions of cooling in the mould. Unequal plasticity in working can also be expected where there is any degree of inverse segregation.

In order to avoid the extrusion defect, one way is to leave part of the billet unextruded and to treat this as scrap. As much as 30 per cent of each billet may need to be rejected, but this is very uneconomical and the better plan is to extrude further and reject unsound material by inspection of fractures on the back end of the bar. In brass extrusion, the practice most widely adopted to overcome the worst of the trouble is to use a pressure disc smaller in diameter than the container, so that a skull, about $\frac{1}{8}$ in. to $\frac{3}{16}$ in. in thickness, containing the skin of the billet, remains on the wall ot the container. This is very largely effective, but is not altogether reliable. Its efficacy obviously depends on the pressure disc being well centred, for if the skull is eccentric or incomplete, a partial or semicircular defect is likely to appear in the bar. Moreover, surface oxide carried in by the crumpling of the skin when the billet is upset in the press before it begins to extrude may lie too far in to be included in the skull. A means of centring the pressure disc, assuming that the extrusion ram enters the container axially, is afforded by providing a tapered projection on the end of the extrusion ram which engages in a recess in the back of the disc. The same purpose is fulfilled, in the case where the ram and disc are hollow to allow the passage of a mandrel, by having a projecting ring on the ram face engaging in an annular recess in the disc. An alternative to cutting a skull which is almost invariably adopted with such metals as 20 per cent nickel-silver, cupro-nickel, monel, and pure nickel, is to turn the exterior of the billets to remove the casting skin and surface blemishes. In the manufacture of high-grade tubes it is also a fairly general practice to machine the billets. The extrusion defect is not entirely obviated in this way, since superficial oxidation of the turned surface occurs during preheating, though it is possible to obtain some degree of control over this by regulation of the furnace atmosphere.

The idea that the entry of impurities into the bar might be prevented or delayed by the use of specially shaped pressure discs has often been entertained, and various trials have been made which have led to divergent opinions. The general plan has been to use discs with concave, ribbed or roughened surfaces with the purpose of trapping or immobilizing the enfolding defective metal. On the whole no success can be claimed for these measures : the creation of a stagnant layer at the base of the billet is ineffective in preventing the oxide, etc., from entering at the rear edge of the billet since it follows a curved path over this layer. The most that can be said is that a concave or conically recessed disc slightly delays the appearance of the defect.

Reverting in this connection, however, to the hollow funnel which forms in the base of the billet when it has been reduced to a thin disc, and which, incidentally, is not peculiar to any of the above types of flow, this can be almost completely suppressed by using a dished or conical pressure disc. Such a disc, in conjunction with a conical die, is sometimes used to reduce the weight of the discard from the billet (Fig. 98).

In the course of their trials, Sachs and Eisbein obtained some curious results by extruding billets of hexagonal cross-section in an ordinary cylindrical container. The flow in copper in such a case was, as shown in Fig. 92 (*b*), considerably altered as compared with that in a round billet (Fig. 92, *a*). A change in flow, though not so pronounced, was also found with the brass billets which they tried in the same way. It is difficult to find a satisfactory explanation, unless it is assumed that the hexagonal billet does not become squeezed up under pressure to make even contact with the container, so that the friction surface is not as great as under ordinary conditions.

The position now reached is that it has to be recognized that in extruding most of the technically important metals some proportion of the material is liable to extrusion defect, and though by use of palliative measures it can be mitigated very largely, so that the scrap loss from this cause is probably not higher, on the average, than 12–17 per cent, it is not thereby avoided altogether. There still remains to consider the feasibility of inducing a radical alteration in the flow, and the question whether this, while providing a means of overcoming one trouble, will introduce new difficulties. The possibilities of modifying the flow lie in (*a*) reducing the interfacial friction between billet and container by using some suitable lubricant; (*b*) altering the form of the entry to the die to avoid the rapid inflow from the centre of the billet while the sides lag behind; (*c*) the use of the inverted method of extrusion.

Lubrication. To the extent to which lubrication is used in practice, its effect on flow is often rather obscure. For copper alloys, graphite, or graphite and oil, is applied thinly to the die entry (and to tube mandrels) in the interests of surface finish, and to reduce wear. The container too is usually swabbed out cursorily between

FIG. 43.—Layout of Pirelli continuous extrusion shop.

A. Extrusion machine.
B. Heated stores.
C. Lead-melting furnace.
D. Lead ingots.
E. Drying ovens.
F. Take-off stands.
G. Control panels.
H. Sheathed cables.
J. Unsheathed cables ready for drying.

(*Courtesy of Pirelli General Cable Co.*)

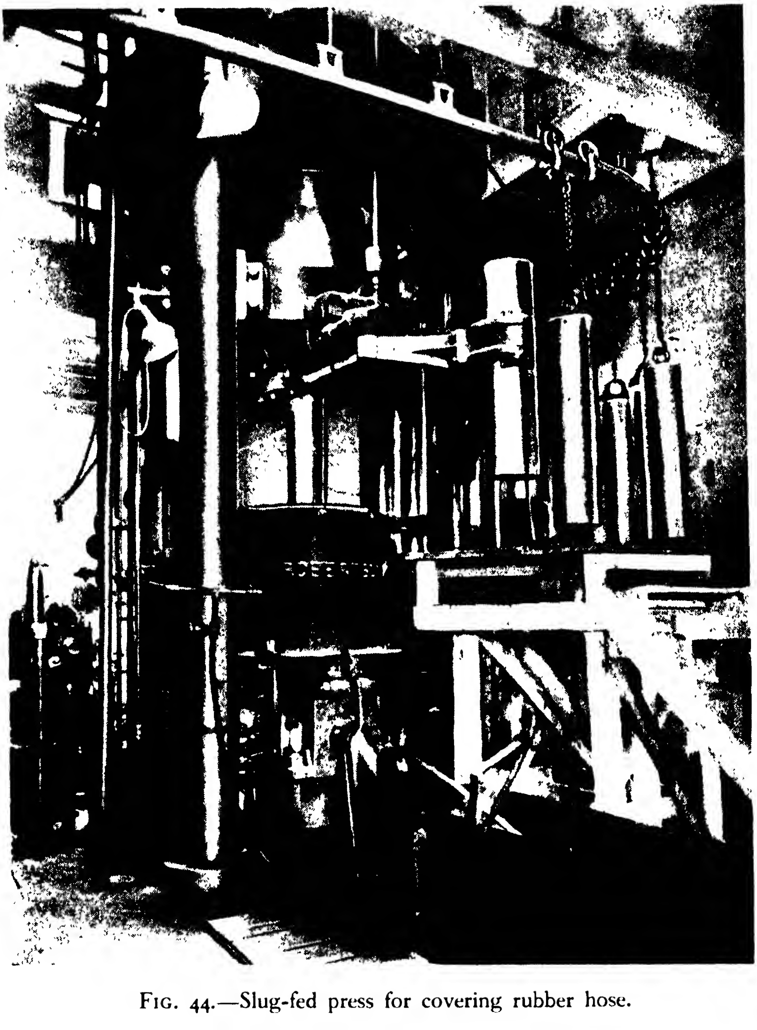

FIG. 44.—Slug-fed press for covering rubber hose.

(Courtesy of John Robertson Company.)

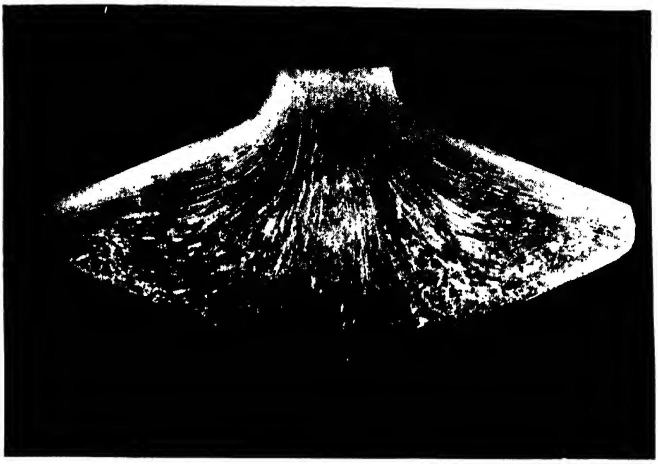

FIG. 98.—Discard from steel billet resulting from use of conical die and recessed pressure disc.

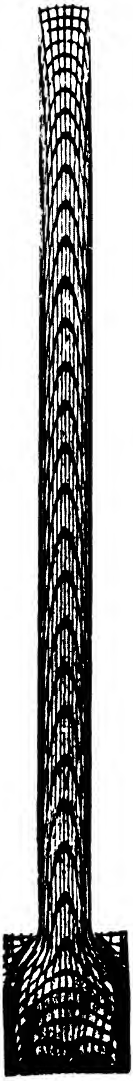

FIG. 97.—A billet of tin extruded at 140° C. from a cold container, bringing out the effect of a temperature gradient. (Cf. Fig. 88 *a*.)

FIG. 99.—Separation at flow surface in discard end of hard brass billet.

Fig. 100.—Aluminium billet extruded 60 per cent at 500° C. Showing how entraining of oxidized surface layers can lead to subcutaneous defects. Direct extrusion.

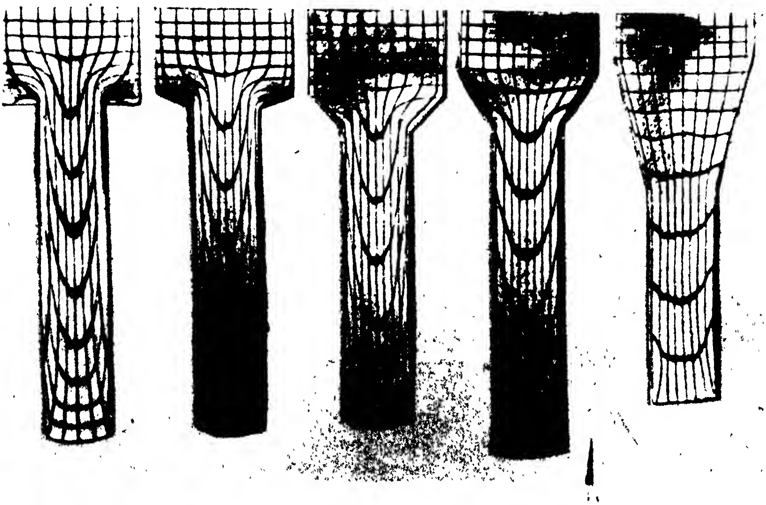

Fig. 101.—The effect on the distribution of flow caused by the use of dies of different conicity. Small-scale experiments with tin. (*Sachs and Eisbein.*)

each extrusion. Aluminium alloys, on the other hand, are generally worked without a lubricant, or with only a very little in the die. Graphite, if it is used, imparts a dark skin to these metals, which can not be got rid of.

It has been seen that, in the experiments with small billets, effective lubrication exercises a profound effect on the course of flow. A good deal of attention has been given to its possible advantages in practice, including a reduction in the power required to extrude long billets. Newson[17] has described trials in which a wash of graphite was applied to hot billets of P.M.G. alloy. These extruded more easily than usual, the view being taken that the billets slid through the container after the manner of that in Fig. 83. On extracting the unextruded discs of the billets from the press, they fell into two parts, the separate faces, seen in Fig. 99, being coated with graphite. The bars produced were unsound on the outside, having a wrinkled skin covering a laminated surface which was also coated with graphite. This provides a good example of the fact that when conditions of flow are such that the skin of the billet is not enfolded to give the central defect, it may be entrained elsewhere to give rise to a subcutaneous defect. This is not confined to the case where lubricant is used, but seems to be associated with flow of types A and B when some sliding occurs with the latter. Copper and high copper alloys are somewhat liable to show, usually over the final third of the extruded length, a rough bark-like skin which has to be cleaned up by scalping. Reverting to Fig. 89, to see the mechanism by which this occurs, the outer layers of the billet become concertinaed in the deformation zone near the die with the result that oxide, etc., is liable to be drawn in through this zone, passing out through the die at or just below the surface of the bar (see also Fig. 100). An almost identical defect can occur in inverted extrusion.

Conical Extrusion Dies. It is justifiable to feel that, so far as the flow of the metal is concerned, the square-faced type of die so far considered is not the most ideal shape. It is clear from the foregoing that it is one of the main factors in causing the deformation to be very unequal by its effect in holding back the inflow from the outer zone of the billet. A bell-shaped entry to the die, suggested by the flow surface which the metal creates for itself by the formation of the dead zones under the shoulders of the die, might appear to have merits, and this and other shapes have been tried from time to time. It has, however, to be borne in mind that regulation of flow is only one aspect to be taken into account, and that the strength of the die, and the effect of its shape on the extrusion pressure, have also to be considered. Dies of conical form are now often used in rod and tube extrusion. Fig. 101 illustrates the effect in small-scale experiments of using polished, lubricated dies of varying conicity. Even with the widest angle, the dead zone is absent, and the outermost units of pattern pass out along the face of the die. As the angle is made more acute, the superimposed deformation towards the outside of the bar becomes less, and, in the final case, there is a fairly close approximation to uniform deformation by simple elongation. Although this appears to be favourable and looks as if it might entail a reduction in the force needed for extrusion, the latter is not the case, as will be seen when this aspect of the matter is discussed in Chapter VI. Such a die as the last of this series would also be quite unsuitable because it would not withstand the bursting stresses in use.

In so far as, with conical dies, the skin of the billet is caused to pass across the die face, the enclosure of impurities inside the extruded bar will tend to be avoided, and they will be apt to appear instead on its surface. In extruding nickel alloys, using conical dies and with a graphite lubricant, it seems probable that flow of this kind is brought about. Attention to adequate lubrication, and the use of turned billets, conduce then to the production of clean extruded surfaces.

Flow in Inverted Extrusion. It is of interest to compare the flow in direct extrusion with that which accompanies the inverted method, wherein friction between the container and billet is altogether absent owing to there being no relative movement between them. Fig. 102 shows a series of etched billets residues, and Fig. 103 one of 2·5 per cent copper-aluminium alloy, the latter extruded at a uniform temperature of 360° C. The similarity with flow of type A is striking. Deformation is confined to a zone near the die and, as the latter travels forward, the deformed zone moves with it into the unaffected metal. Up to the point to which extrusion has been carried in Fig. 103, five horizontal sets of the chequer pattern have been involved, and the sixth row is just beginning to be affected in the centre. Of these five rows, the three centre units

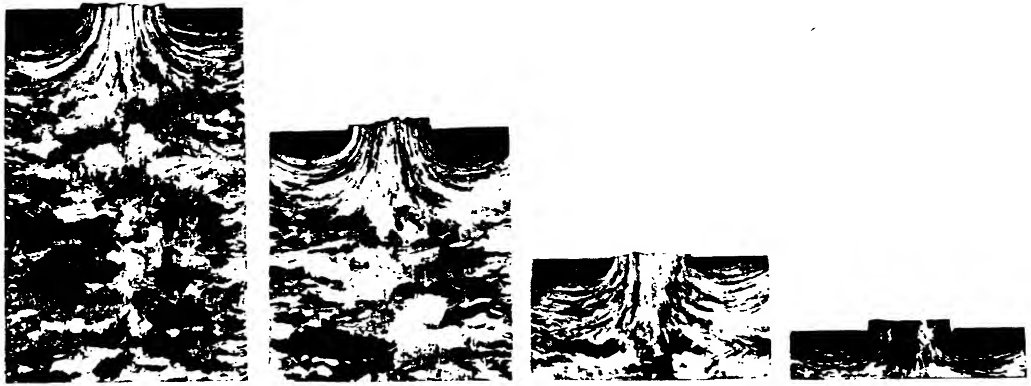

FIG. 102.—Flow in the inverted process of extrusion.

FIG. 103.—2·5 per cent copper-aluminium alloy extruded at 360° C. by the inverted method.

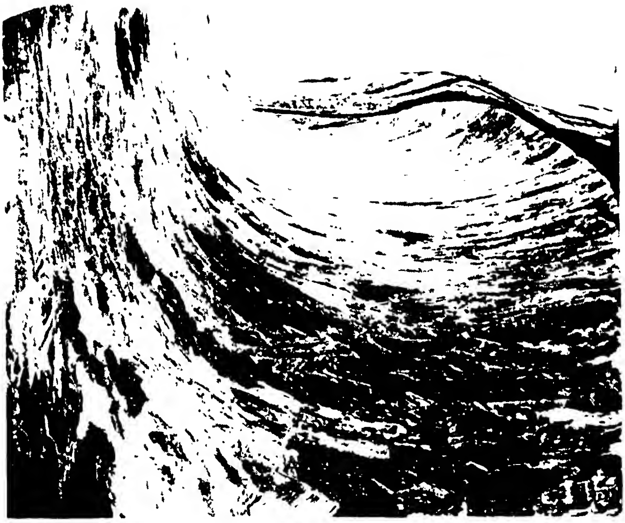

FIG. 104.—The enfolding of the skin of the billet in inverted extrusion.

in each have gone completely into the rod, while portions of the outermost units remain foreshortened under the die shoulders where they still contribute to the stream entering the die. The leading end of the bar shows, as before, only slight working. At the extreme back end the usual hollow funnel can be made to form by pushing extrusion far enough.

It is generally agreed that notwithstanding some serious practical disadvantages of the inverted method, it gives a product which is more uniformly worked in a lengthwise direction than that made by direct extrusion, for which flow of type C is most common, and this is seen to be so. In the transverse direction marked inequality of deformation as between centre and outside persists. The inverted process gives freedom from the central extrusion defect, but as already mentioned, an alternative defect is liable to occur close to the surface of the bar. The origin of this is clearly shown in Fig. 104. It can be largely avoided by providing a clearance between the die and container, so as to cut a skull, just as in the direct process.

REFERENCES

[1] H. Tresca. On the Flow of Solid Bodies under High Pressure. *Comptes Rendus*, 1864 (2), **59**, 754–8; 1867 (1), **64**, 809–12. *Mem. Sav. Ac. Sc.*, 1868, **18**, 733–99; 1872, **20**, 75–135.

[2] P. Schweissguth. The Course of Flow in Extruded Brass Billets during the Hydraulic Extrusion of Bars. *Z.V.D.I.*, 1918, **62**, 281–310.

[3] F. Doerinckel and J. Trockels. Processes of Flow in Brass Ingots during Extrusion. *Z. f. Metallkunde*, 1921, **13**, 466–73.

[4] W. Schmidt. The Extrusion of Elektron Metal. *Z. f. Metallkunde*, 1927, **19**, 378–84.

[5] R. J. Redding (discussion). *J. Inst. Metals*, 1921, **26**, 246.

[6] W. Rosenhain and F. S. Tritton (discussion). *Ibid.*, 250.

[7] R. H. Greaves (discussion). *Ibid.*, 254.

[8] H. Unckel. *Z. f. Metallkunde*, 1921, **13**, 466.

[9] J. Zagorski. *Diss. T.H.*, Berlin, 1929.

[10] W. Riedel. *Neues Jahrb. Mineral*, 1929, B, **67**, 151.

[11] E. Siebel and H. Hühne. Investigation on the Course of Deformation during Technical Forming Operations. *Mitt. K.W. Inst. Eisenforschung*, 1931, **13**, 43–62.

[12] G. Sachs and W. Eisbein. Power Consumption and Mechanism of Flow in the Extrusion Process. *Mitt. Material*, S. **16**, 1931, 67–96.

[13] H. Unckel. The Heterogeneity of the Material as it Affects the Flow Process in the Dick Extrusion Method. *Z. f. Metallkunde*, 1936, **28** (6), 151–4.

[14] C. E. Pearson. A Comparison of the Extrusion Properties of Some Aluminium Alloys. *J. Inst. Metals*, 1939, **64**, 299–310.

[15] R. Genders. The Extrusion Defect. *J. Inst. Metals*, 1921, **26**, 237–45.

[16] D. K. Crampton. The Extrusion of Metals. *Trans. A.S.M.*, 1936, 55–79.

[17] J. E. Newson (discussion). *J. Inst. Metals*, 1931, **45**, 378.

CHAPTER VI

THE PRESSURE OF EXTRUSION

APART from certain impact processes carried out with cold blanks, extrusion forms one of a group of technical hot-working operations, including hot rolling and forging, in which very extensive deformation is brought about in the upper working ranges of the metals. Regarding the conditions which govern such shaping operations at high temperatures, accurate knowledge is still somewhat incomplete and is not comparable with that which has been accumulated in respect of the behaviour of metals when subjected to cold-working operations. Research in relation to high temperature deformation has been concerned for the most part with the ability of materials to endure stress in service, and with the development of alloys capable of bearing continuous loading when heated without undergoing " creep ". The converse properties which involve the workability of metals in relation to technological shaping in the course of manufacture have been less fully examined, and have only recently been studied to any extent. The high degree of practical success with which the present great variety of technical alloys are extruded has been attained, for the most part, on the basis of empirical knowledge, using experience to discover the limits within which satisfactory working can be obtained.

The force which it is necessary to apply to cause the continuous discharge of a metal through an extrusion die will obviously be affected by a variety of circumstances. Primarily there will be involved the nature of the metal concerned and the manner in which its properties are influenced by the temperature and the speed at which the work is carried out. Besides these, there must enter into account the amount of deformation involved, as an index of which can be taken the dimensions of the billet in relation to those of the section which is being produced. Additional factors are the shape of the section and the design of the die used in forming it. While the problem is thus one of considerable complexity, the derivation of systematic data from which it can be studied is rendered very difficult, under industrial conditions. For apart from the cost which is involved and the need to avoid interference with production programmes, there is also the fact that these conditions, especially as regards temperature, but also in other respects, are usually insufficiently constant to allow of accurate mensuration.

Just as in the study of flow phenomena, the resort to experiment with suitable apparatus has provided a means of overcoming some of the practical obstacles, and, by breaking down the problem and examining the variables independently, some light has been cast on the fundamental aspects of the process. Such studies have, of course, their limitations and it is necessary to exercise caution and to avoid a too literal interpretation in seeking to apply the results, since the dissociation of the various factors necessitates experimental procedure which departs from ordinary practice. Nevertheless, there are many points at which a direct comparison between the experimental work and its practical counterpart can be made, and at these a remarkably high measure of agreement is obtained.

Tammann [1] appears to have been the first to attempt to ascertain what pressures are required in extrusion. In his apparatus, the metal to be examined was placed in a cylinder closed at one end, and a ram of smaller diameter than the cylinder bore was forced into the open end so as to cause the metal to flow out through the annular space between the two. The principle is therefore essentially that of inverted extrusion. Several metals were examined at different temperatures, though the effect on the egress velocity of only two pressures was measured in each case. Among his main conclusions were that, for constant pressure and temperature, the rate of extrusion is uniform, and that, for a given pressure, an increase of 10° C. nearly doubled the rate of flow through the same aperture, although as the melting-point was approached, the increase was found to be somewhat greater. He placed the metals which he used in order of decreasing ease of extrusion as follows: K, Na, Pb, Tl, Sn, Bi, Cd, Zn, Sb. Portevin [2], working mainly with magnesium alloys, concluded that for a metal under given conditions, the speed and pressure of extrusion form only one variable, the one determining the other. The important series of investigations into processes involving plastic deformation pursued at the K.W. Inst. für Eisenforschung, of which a review has been given by Körber [3], and at the K.W. Inst. für Metall-Forschung under Sachs, have gone a long way in elucidating many of the problems encountered in the working of metals. As part of these researches Siebel and Fangemeier [4], and Sachs and Eisbein [5] studied the extrusion process, using the metals lead and tin at the ordinary temperature. The latter, in particular, took account of a large number of relevant factors, and also extended their work to cover some aspects of the extrusion of copper and brass on an industrial scale. Using a heated press, Pearson and Smythe [6] examined the relation between extrusion pressure and speed, and the influence of temperature for a number of soft metals. The former has done the same for certain aluminium alloys [7]. The diagram shown in Fig. 105 provides an example of an apparatus for extrusion which has been found very suitable for small-scale experiment, and which is convertible for either direct or inverted working. In order to conduct

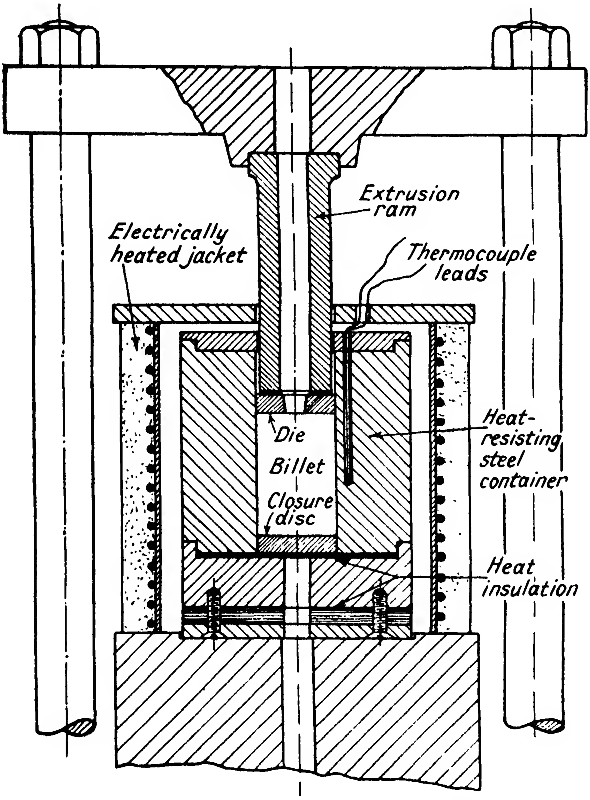

FIG. 105.—An apparatus for experimental extrusion adaptable for the direct or inverted method.

an extrusion at a predetermined temperature the whole of the press body, which is made from special heat-resisting steel, is enclosed inside an electrically heated jacket, by which means temperatures up to 600° C. can be uniformly maintained. With this apparatus, the power for operation is obtained from a single lever hydraulic testing machine arranged for compression. In working, it is possible, alternatively, to fix the load and measure the speed of extrusion by observation of the rate at which the ram enters the container, or, to ascertain the load required to maintain a selected rate of extrusion. Unless specifically mentioned all speeds of extrusion referred to below are measured at the ram, and are not the efflux velocities, which are, of course, dependent also on the reduction which is being effected. Pressures are quoted in tons per square inch on the extrusion ram.

Extrusion-Pressure Curves. By making observations in an apparatus of this kind of the pressure changes which take place during the extrusion of a billet at a predetermined rate, and with the metal in a uniformly heated condition, curves such as are shown in Fig. 106 are obtained. Of these, (*a*) represents the direct method of extrusion, and is a typical pressure record for the case where a dry unlubricated container is used; it corresponds therefore with flow of the type B in the preceding chapter. The pressure rises sharply while the billet is being compressed to fill out the container, and is at a maximum as extrusion starts. As the stroke continues, the pressure falls progressively until, when only a thin disc of the billet is left, it increases rapidly again due to the increasing resistance

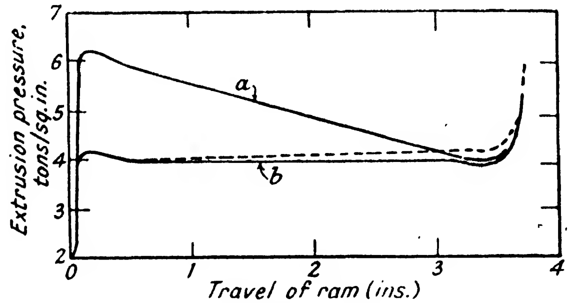

FIG. 106.—Pressure curves for the extrusion of aluminium by direct (*a*) and inverted (*b*) methods to rod, involving a reduction of 90 per cent; ram speed 0·2 in./min. Temperature held at 450° C.

to the radial inflow of this residue to the die aperture. The difference between the maximum and minimum pressures can be attributed to the force which is required in moving the billet through the container against the frictional impedance which, as we have seen, has generally to be overcome by severe deformation in the peripheral zone of the billet. The actual pressure which has to be exerted on the ram at any moment is therefore not only that which is required to bring about the deformation at the die, which is the real pressure of extrusion, but is greater by an amount which depends on the residual length of the billet, and only falls to the true extrusion pressure as this length approaches zero. It is easily seen that the maximum pressure will vary also according to the amount of friction between the billet and the container: when the latter is smooth and adequately lubricated, so that the flow follows type A, the initial pressure is very little greater than that towards the end of the extrusion.

For the case of inverted extrusion, in which the billet has not to be displaced relatively to the container, the pressure curve, (*b*) has a different form. Deformation inside the billet is now confined entirely to a zone in the neighbourhood of the die entry, and the pressure recorded is solely that required to induce it to flow through the die. Once, therefore, the zone of deformation has been created at the beginning the pressure remains substantially constant throughout the operation until the end of the billet is approached.* The value of this steady pressure corresponds very well, as might be expected, with the minimum value in the direct method. Where figures for the extrusion pressure are given in succeeding pages they refer either to the constant pressure in the inverted, or the equivalent minimum pressure in the direct process.

The Degree of Deformation. The extent of the deformation which is entailed in an extrusion operation must obviously be one of the decisive factors in regard to the force which it is necessary to apply. The deformation is ordinarily given in terms of the percentage reduction based on the cross-sectional areas of the con-

---

* As indicated by the broken curve in Fig. 106, the pressure in inverted extrusion frequently rises slightly as extrusion proceeds, the increase being usually not more than 5 per cent. This is brought about by metal becoming interposed between the die and the container and obstructing the movement of the former.

tainer and the die aperture, $\frac{A-a}{A} . 100$. The term "extrusion ratio", taken from the ratio $\left(\frac{A}{a}\right)$ of the above areas, is also frequently referred to. The question of how the pressure of extrusion is affected by the reduction can be approached by observing the pressure to cause extrusion at a predetermined rate through a series of dies of different size but otherwise of standard form. This has been done by several workers [8, 9, 10], using for the most part flat dies having a constant bearing length. The results of experiments on lead at the ordinary temperature using the inverted method, and with the ram advanced at 0·1 in. per minute, are given in Table 3, and a similar series for brass, at a much higher rate, in Table 4.

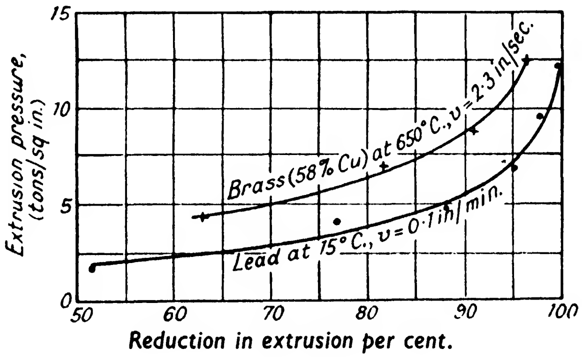

FIG. 107.—The extrusion pressure in dependence on the degree of deformation.

From the graph, Fig. 107, plotted from these data, it is seen that the pressure increases rather slowly to begin with until the reduction is about 90 per cent, after that it shows an increasingly sharp rise, especially when it exceeds 97 per cent. This brings out very clearly the greater difficulty that there is in extruding very small sizes from a large diameter billet, and emphasizes the need, in case of the stiffer metals, for using a container of suitable size in relation to the section which is to be made. With the more easily extrudable metals reductions are frequently given which exceed 99 per cent. On the other hand, the reduction on some of the harder materials can not be taken beyond about 95 per cent, corresponding to an extrusion ratio of 20.

TABLE 3

THE EXTRUSION PRESSURE IN RELATION TO THE DEGREE OF REDUCTION FOR LEAD AT 15° C.

Inverted Method. $v = 0{\cdot}1$ in. per minute. Flat-faced die.

Reduction by Extrusion per cent $\left(\frac{A-a}{A} \cdot 100\right)$	Extrusion Ratio $\left(\frac{A}{a}\right)$	Extrusion Pressure tons/sq. in.	$\log_e \frac{A}{a}$	" Resistance to Extrusion " tons/sq. in. (vide p. 124)
99·1	112	13·0	4·71	2·53
98·2	55·6	10·25	4·02	2·34
95·0	20·0	7·25	2·99	2·22
88·2	8·5	5·25	2·13	2·30
81·0	5·3	4·2	1·67	2·31
52·4	2·1	1·9	0·73	2·42

TABLE 4

THE EXTRUSION PRESSURE FOR DIFFERENT REDUCTIONS (Sachs and Eisbein)

Brass (58 per cent Cu; 2·7 per cent Pb). Direct Extrusion from 1000-ton Press.

Diameter of Billet In.	Diameter of Rod In.	Reduction per cent $\frac{A-a}{A} \cdot 100$	Extrusion Ratio $\frac{A}{a}$	Extrusion Pressure tons/sq. in.		Mean Temperature ° C.	Ram Speed In./sec.
				Initial	Minimum		
7·25	1·22	96·6	28·2	17·7	12·5	640	2·3
7·25	2·05	90·7	10·7	15·5	8·3	640	2·3
7·25	2·8	82·2	5·6	14·2	6·4	650	2·6
7·25	4·0	63·8	2·8	12·3	3·9	660	2·9

Sachs and Eisbein have shown that if the extrusion pressure is plotted against the logarithm of the ratio $\frac{A}{a}$, straight lines are obtained which pass through the origin (Fig. 108), indicating a relation given by

$$P = c . \log \frac{A}{a} \quad . \quad . \quad . \quad . \quad (1)$$

in which " c " is a constant involving the resistance to deformation of the metal.

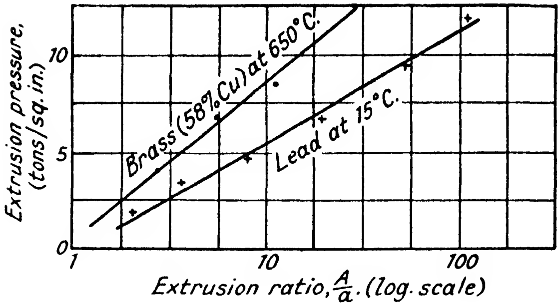

FIG. 108.

Calculation of the Power Required in Extrusion. The work required to be done in deforming a plastic material was deduced by Fink[11] as early as 1874 from observations on the rolling of metals. His formula states that, *assuming uniform deformation*, the work performed is equal to the product of the volume of the deformed body, the resistance to deformation of the material, and the greatest principal deformation. Siebel[12] has applied this to the calculation of the force required in carrying out extrusion. For this process, in transforming a cylindrical billet to a circular bar, the greatest principal deformation is given by the natural logarithm of the ratio of the original and final lengths, so that the work done is expressed by

$$W = V.k.\log e.\frac{l}{L} \quad . \quad . \quad . \quad . \quad (2)$$

hence

$$F = A.k.\log e.\frac{A}{a} \quad . \quad . \quad . \quad (3)$$

and

$$P = k.\log e.\frac{A}{a} \quad . \quad . \quad . \quad . \quad (4)$$

W is the work done in extruding a billet of length L to a bar of length l; A and a are the respective cross-sectional areas; F is the total force required, P the extrusion pressure, V the volume of the billet, and k is the resistance to deformation. The resistance to deformation is not a constant characteristic of a metal but depends on the temperature, and on the rate at which deformation is carried out, that is to say, in this case, on the speed of extrusion. It is independent of the extent of working, since, in extrusion, the deformation is by hot working, the criterion of which is that the resistance remains unchanged as working proceeds. This, of course, is in contrast with cold work, during which, due to work-hardening, the resistance increases rapidly during deformation.

The above relationship takes no account of the effect on the extrusion pressure of non-homogeneous flow in extrusion, or of friction at the die surfaces, and can serve therefore only as an approximation. In practice the forces necessary, and the amount of work requiring to be performed in metal-forming processes are always greater than the theoretically calculated values. This is because the deformation which is effective in producing the required change in shape is always accompanied to a greater or less extent by further deformation which contributes nothing to the change and represents an internal loss in the process. As already seen in Chapter V, this supplementary deformation is very extensive in extrusion, where it causes a marked departure from uniformly distributed flow of a parallelepipedial kind. Besides such internal losses, work is also consumed in overcoming friction between the material and the deforming tools.

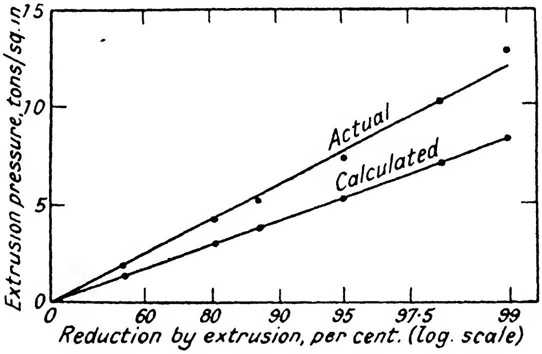

FIG. 109.—The calculated and observed pressures for the extrusion of different sizes of bar.

The usefulness of the theoretical equation can be tested by measuring the values of P for different die sizes and comparing these with the results obtained from calculation according to the equation (4). In doing this, using values for k obtained from compression tests at appropriate speeds of deformation, Sachs showed that the actual values of the extrusion pressure are considerably in excess of those calculated. The extent of the deviation is shown in Fig. 109, from which it is evident that the observed extrusion pressures are about 45 per cent above those calculated. The actual extrusion pressure is therefore given by

$$P = \beta\, k . \log e . \frac{A}{a} \quad . \quad . \quad . \quad . \quad (5)$$

in which β is a constant which will depend on the design of the die, but which for a flat-faced die has the approximate value of 1·5. βk can be termed " the resistance to extrusion " for a given set of conditions. In Table 3, for lead extruded at 15° C. to give widely different reductions, it will be seen that consistent values for this term are obtained.

For extrusion by the direct process, on the assumption that the drop in the power required during the extrusion of long billets is ascribable entirely to reduced friction between the billet and the container, Siebel gives as the additional force (R) which this entails.

$$R = \pi . D . L . \mu . k \quad . \quad . \quad . \quad . \quad (6)$$

L being the length of the billet at any moment, D its diameter, and μ the coefficient of friction between the metals concerned. S, the total pressure exerted in extrusion, is then:

$$\begin{aligned} S &= F + R \\ &= \left(A . k . \log e . \frac{A}{a}\right) + (\pi . D . L . \mu . k .) \quad . \quad . \quad (7) \end{aligned}$$

For the inverted method of extrusion, there being no displacement of the billet through the container, the extrusion force remains constant.

$$S = F = A . k . \log e . \frac{A}{a} \quad . \quad . \quad . \quad (3)$$

Considering that, for the ordinary case of a flat extrusion die, there exists no practicable way at present by which an accurate assessment of the power necessary can be made on account of the complexity of the flow process for such a die, Sachs and Eisbein have offered a tentative solution based on a die with a conical lead-in. With dies of different conicity increasing steepness causes a gradual change in the flow of the metal, which, as seen from Fig. 101, becomes much more nearly uniform across the section. When the die angle is made very small, the problem becomes identical with that for a drawing die. For the case of drawing, it has been possible to devise experimental methods by which all the essential relationships, including the measurement of the internal and friction losses, have been established, with results that have been of great value in assessing the results of variations in drawing technique, and in arriving at the best working conditions in regard to the optimum die angle, etc. Taking the theoretical equation (4), they propose a modification to bring in the friction at the die surface for a conical die on the basis of knowledge derived from drawing, so that the extrusion pressure becomes increased, for a die of angle α, to

$$P = k\left(1 + \frac{\tan\alpha}{\mu}\right)\left[\left(\frac{D}{d}\right)^{\frac{2\mu}{\tan\alpha}} - 1\right] \quad . \quad . \quad (8)$$

This formula, however, involves assumptions which are only strictly justified when the die angle is very small. To include the friction between the billet and the container in direct extrusion, they propose to adjust the formula (4) to

$$P' = (P + k)\, e^{\frac{4\mu L}{D}} - k \quad . \quad . \quad . \quad (9)$$

Zholobov[13] has tested the applicability of the formulæ (7) and (9) to direct extrusion practice on an industrial scale, and concludes that (9) is the more satisfactory. The greatest difficulty which he found was in regard to the coefficients of friction, the previously assigned values for which were unsuitable. This is not to be wondered at, for as shown earlier, the displacement of a billet through the container does not involve a straightforward friction problem, and in any case, a good deal must depend on the surface condition of the container. However, by substituting values for μ as follows: 1000°–900° C., $\mu = 0{\cdot}10–0{\cdot}15$: 900°–800° C., $\mu = 0{\cdot}15–0{\cdot}18$ for copper; and 850°–725° C., $\mu = 0{\cdot}15–0{\cdot}18$: 725°–650° C., $\mu = 0{\cdot}18–0{\cdot}20$ for brass, and taking the true resistance to deformation (k), from compression tests, as being

Temp. ° C. .	900°	850°	800°	750°	700°	650°
Copper k (tons/sq. in.)	0·95/1·14	1·27/1·4	1·46/1·6	1·9/2·2	—	—
Brass (58/42) k (tons/sq. in.)	—	—	—	0·8/0·9	0·9/0·95	1·0/1·14

he obtained results of which a selection taken at random is shown in Table 5. It will be seen that, with these various adjustments, it

TABLE 5

	Dimensions of Billet		Extruded Bar or Tube Diameter In.	Extrusion Ratio $\frac{A}{a}$	Speed of Extrusion In./sec.	Extrusion Temperature ° C.	Observed Maximum Extrusion Pressure Tons/sq. in.	From Equation (9) using Corrected Values of μ		
	Diameter In.	Length In.						μ	k	Calculated Extrusion Pressure Tons/sq. in.
Copper	7·1	15	2·75	6·6	0·8	850°	**13·2**	0·16	1·4	**14·2**
	7·1	21·5	2·36	9·0	1·1	860°	**26·3**	0·15	1·27	**21·0**
	10·0	15·8	3·0	11·0	1·4	760°	**31·0**	0·21	2·2	**30·5**
	16·0	21·5	8·3 × 9·0	17·5	0·4	910°	**18·4**	0·14	1·15	**21·0**
	7·1	14·8	1·58 × 2·15	22·0	2·0	880°	**23·6**	0·15	1·27	**27·5**
	7·1	14·0	2·36 × 2·68	28·8	3·0	860°	**33·7**	0·15	1·27	**34·5**
	7·1	14·0	1·75 × 2·1	38·0	2·0	850°	**39·0**	0·16	1·4	**38·2**
58/42 Brass	16·0	21·5	7·1	5·1	0·4	725°	**11·2**	0·18	0·89	**6·2**
	12·0	18·5	5·5 × 7·0	6·8	1·2	730°	**15·0**	0·18	0·89	**17·9**
	16·0	25·0	4·5 × 7·0	7·9	0·6	730°	**12·7**	0·18	0·89	**13·2**
	12·0	20·5	3·75 × 5·0	13·0	1·2	720°	**14·3**	0·18	0·89	**18·9**
	7·1	13·0	1·6 × 2·25	18·7	3·0	700°	**27·5**	0·20	0·95	**25·4**
	7·1	14·0	2·0 × 2·28	35·5	2·0	730°	**40·6**	0·18	0·89	**31·6**

is possible to obtain a fair measure of agreement between the observed and derived extrusion pressures. It would be unwise to attach too much significance to these results, but they do represent at least an interesting attempt in a most difficult and involved problem to arrive at a means of calculating the extrusion pressure.

The Influence of Speed on the Extrusion Pressure. The extrusion process is significantly affected in several ways by the speed at which it is conducted. For the moment we shall be concerned only with the bearing which this has on the pressure requirements. The rates used in extruding metals vary a good deal, and although there are reasons for this which are not governed by the pressure requirements, it is nevertheless a matter of decided interest which calls for examination.

TABLE 6

Extrusion Pressure Tons/sq. in.	Corresponding Speed of Extrusion
0·60	1
0·69	1·8
0·92	10
1·15	35
1·38	86
1·60	175

The data in the above table are derived from tests in which lead billets kept in a heated press at 200° C. were subjected to extrusion by the inverted method under constant loads, and the uniform rates at which the ram moved into the container were measured. Similar results have been obtained in numerous experiments at other temperatures and using several of the soft metals. Summarizing those for lead only, which are typical of the remainder, it is found that to bring about a tenfold increase in speed, the pressure has to be increased as follows: at 17° C. by 36 per cent: at 100° C. by 44 per cent: at 166° C. by 50 per cent: and at 325° C. by 55 per cent.

When we come to consider how the pressure is affected when, say, brass is extruded under technical conditions, at different rates, the matter is complicated by a factor, namely the cooling of the billet, the extent of which is greater the lower the rate of extrusion and the hotter the billet in relation to the press container. Thus, the pressure curve taken in direct extrusion is similar to the experimental curve (*a*) in Fig. 106, only when extrusion is completed in a matter of 3 to 4 seconds, so that hardly any loss of heat occurs; at lower rates the pressure shows less fall during the working stroke, and it may, in fact, be found to rise as a result of the increasing stiffness of the cooling metal. Evidence of this is afforded by the records made by Sachs and Eisbein which are reproduced in Fig. 110. The upper set refers to brass billets inserted at 650° C. into a container well warmed from previous working, and for these it may be seen that the pressure at the beginning is higher the greater the rate used, but that because of the greater opportunity for cooling at the lower speeds, the final pressures approach the same value for all of them. The lower graph was obtained when the container was comparatively cold, with the result that the more slowly extruded billets became severely chilled, and that the final pressures of this series are in the reverse order to what they were to begin with. It was obviously useless to compare the final pressures in order to assess the effect of extrusion speed, and they had to be content to do so therefore by comparing the initial pressures for billets which were all of equal length, concluding therefrom that to increase the speed of extrusion by ten times the pressure at 650° C. and 700° C. must be raised by 30 and 60 per cent respectively. The extremes of speed normally used on brass

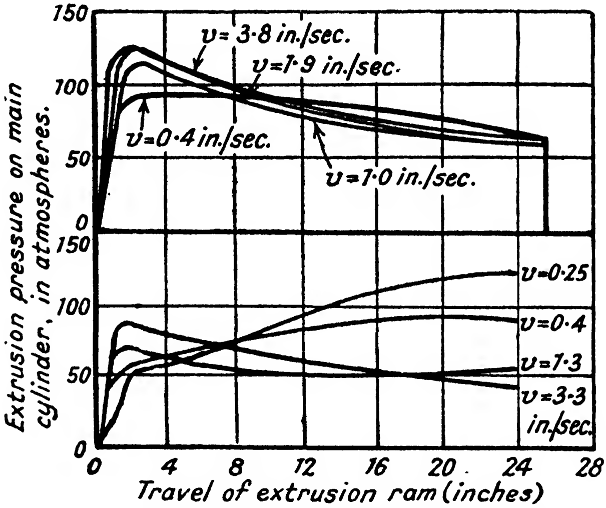

FIG. 110.—Pressure records taken during the extrusion of brass billets.

presses can be taken as being certainly not less than 0·5 in. per second, or more than 5 in. per second, and are generally well within these limits, and it would seem therefore that, leaving aside its consequential effect on the cooling of the metal, the rate at which extrusion is conducted has, per se, only a moderate effect on the pressure which is required.

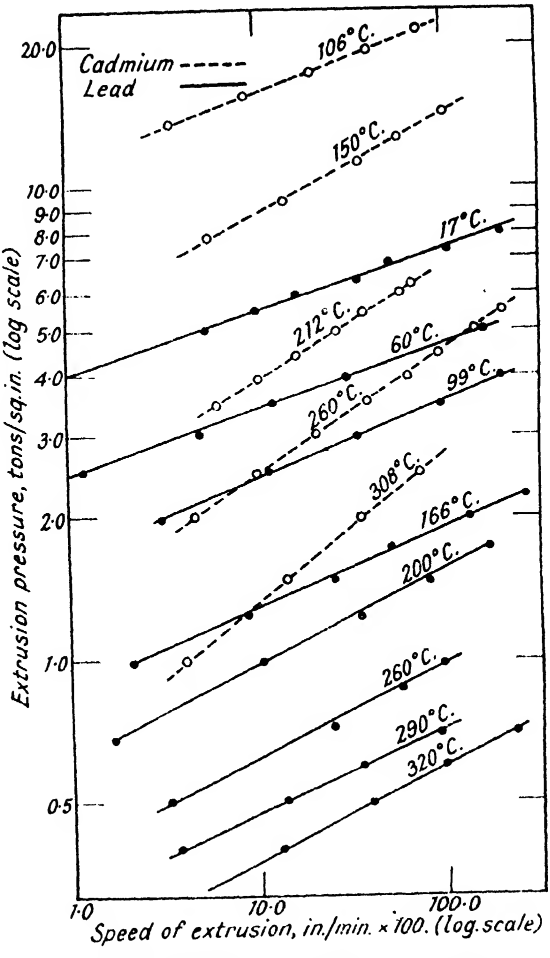

Fig. 111.—The relation between the speed and pressure of extrusion.

There are ample experimental data relating to the soft metals from which to derive an expression for speed and pressure of extrusion. When values for these are plotted logarithmically the points fall on a series of straight lines according to the temperatures at which they were determined, their relationship being given by:

$$v = b\,P^{a} \quad . \quad . \quad . \quad . \quad . \quad (10)$$

in which a and b are constants for any temperature. The index a, giving the increase in the rate of extrusion with increasing pressure, shows little variation in the higher range of temperatures, as may be seen in Fig. 111, from the fact that the lines are approximately parallel, but at lower temperatures a increases in value, and the lines incline more steeply to the pressure axis. In explanation of this, it can be suggested that at low temperatures a certain threshold pressure has to be exceeded before continuous flow can occur. Thus a given percentage increase in the pressure will produce a greater effect on the speed than it does at high temperatures where the limiting pressure for flow is very low or no longer exists. The mean value of the index for several metals in the high ranges where it continues to be fairly constant are as follows:

Lead	(200°–325° C.)	5·2
Tin	(100°–220° C.)	5·3
Cadmium	(200°–300° C.)	3·5
Bismuth	(100°–250° C.)	8·3

These high values bear out the observation made above for lead and brass that variations in speed of the order usual in practice have, in themselves, a rather minor influence on the pressure for extrusion.

The Influence of Temperature. The temperature of extrusion, like speed, has implications in the process other than its effect on the pressure, but these can be left aside for the time being. The essential features of all hot-working processes are that the work should be carried out in a range of temperature in which the metal has sufficient plasticity to allow the shaping process, usually severe, to be conducted with the power which is available; a range, too, in which the effects of the deformation are dissipated rapidly enough to prevent the resistance of the material from being affected, at all events to any serious extent, by work-hardening such as occurs at lower temperatures. It is an almost invariable rule that the resistance to deformation of metals and alloys falls off as the temperature is raised and tends often to become very small as the melting-point is approached, though there are considerable differences both in the rate at which this change occurs and in the ultimate degree of softness which is attained. By taking advantage of this increasing softness working operations can be made easier, but a limit to the temperature which it is possible to employ is reached owing to the loss of cohesive strength which ultimately leads in all materials to intergranular disintegration. The temperature at which hot shortness sets in depends not only on the particular metal, but also on the nature of the deforming process, and can also be influenced by the rate of deformation. Some forming processes lead more readily than others to hot failure, according to the kind and intensity of the stresses to which they give rise. It happens that the forces in extrusion are predominantly compressive, thus permitting rather higher working temperatures than are possible in rolling or forging. All the same differential stresses are present in metal as it leaves the die, due to unequal flow throughout the section, and these are greater the more intricate the shape, so that hot tears and cracks develop at lower temperatures than with products of simpler form. So far as the metals themselves are concerned, hot shortness does not generally appear in pure metals until they are close to their melting points, but the presence of a small amount of a more fusible phase, due in some cases to particular impurities, or in alloys, to a small amount of a eutectic constituent which causes a long freezing range, leads to its earlier incidence and often has the result of seriously restricting the range in which work can be performed, confining it to one in which the general matrix of the alloy is still very stiff. Where this occurs the difficulties of working are greatly enhanced. Thus the hot-working range of a metal can be regarded as lying between limits set by hot shortness on the one hand and by growing stiffness at low temperature on the other, and to assess its capacity for undergoing a particular shaping operation it is important to know the resistance of the material and the effect on it of temperature, and also its ability to hold together without rupture. There are several ways of determining the resistance to deformation of metals in the cold, as by hardness, tensile and compression tests, some of which can be made applicable to show its variation in the high temperature ranges. These, however, do not cover the second point. Tests have also been introduced to measure the forgeability of metals at different temperatures, both as regards the power which is required and the liability to failure by cracking, but these, especially as regards the latter, do not form a reliable guide to the extrusion characteristics. All the same, qualitative data derived in this way afford an interesting comparison with the relative behaviour of metals in their extrusion. For instance, Doerinckel and Trockels[14], and Genders[15], whose results are reproduced together in Fig. 112, have examined the properties of different brasses in hot forging trials. Their results give numerical expression to differences which are already well recognized in the extrusion of these alloys. Undoubtedly the effect of temperature on the behaviour in extrusion can best be determined under actual conditions of extrusion, indeed the process lends itself rather well to this in an experimental sense

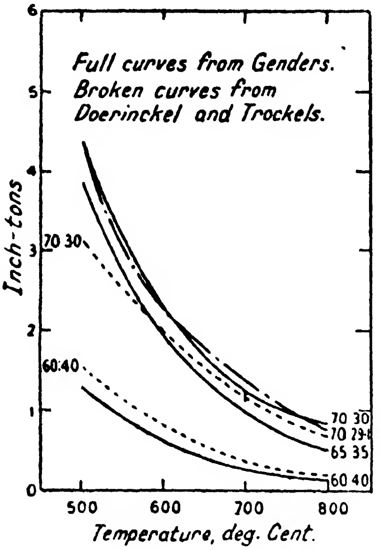

FIG. 112.—The work required in forging various brasses.

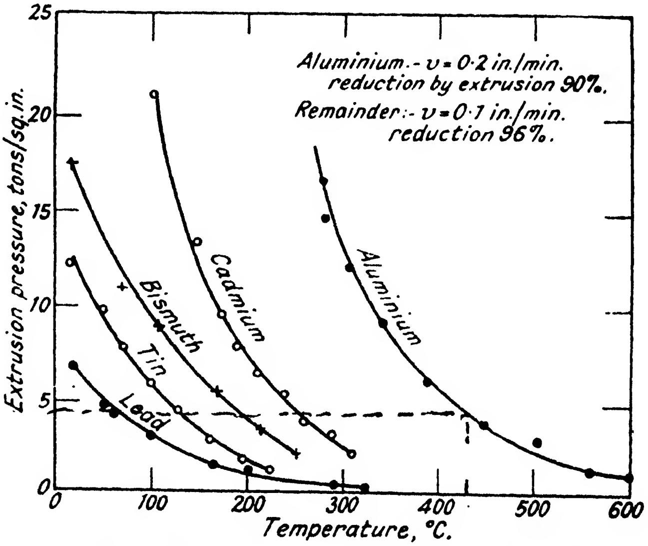

FIG. 113.—The effect of temperatures on the pressure of extrusion.

in those cases where the temperature of the metal under test can be maintained during the trial, and where other causes of pressure fluctuation can be excluded. In Fig. 113 are shown the results of experiments in which the extrusion pressures required to maintain a particular rate of flow through a standard die orifice, at different temperatures, was measured. It will be seen that the general temperature-plasticity relationship is the same in each case, though the rate at which the stiffness increases with reduced extrusion temperature differs considerably. Using similar data Schishokin[16] has derived the formula

$$P = A.e^{-\lambda T} \quad . \quad . \quad . \quad . \quad . \quad . \quad (11)$$

where T is the temperature of extrusion and λ is a coefficient for the metal. This formula has been confirmed by the author in working with aluminium alloys for which λ had the following values:

Aluminium (99·5 per cent)	0·0082
2·5 per cent Cu-Al alloy	0·0064
5·0 per cent Cu-Al alloy	0·0064
5·0 per cent Zn-Al alloy	0·0078
11 per cent Zn, 1·3 per cent Cu rem. Al	0·0068

Similar temperature-plasticity curves for technical alloys would be of great interest since those above do no more than indicate the general relationship which may be expected. Experimental

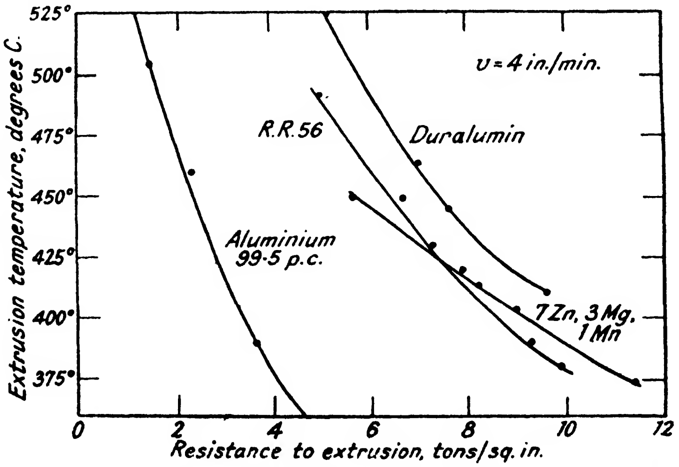

FIG. 114.—The relative resistance to extrusion of some aluminium alloys.

difficulties preclude this at present in the case of copper alloys, but a comparison of the relative extrusion properties of some high-strength light alloys is shown in Fig. 114. One of the advantages of examining metals thus by actual extrusion is that it also affords some evidence of the practicable limits such as are caused by hot shortness.

Pressure and Die Shape. It has been indicated already that while the majority of extrusion dies used for round bars are of the plain cylindrical type without lead-in, and with sharp or only slightly radiused edges to the aperture, various other shapes are also used. These special forms usually serve some definite object such as controlling the flow of the metal, securing better surface finish on the extruded stock or the avoidance of cracking. There is some evidence that metals which are sensitive in respect of the speed at which they are extruded can be taken at higher speed through suitably shaped dies. This is a matter which could probably be profitably examined more fully. How the pressure of extrusion is affected (in the case of different technical alloys) by die shape is an interesting question to which there is frequent reference in the literature, though not as a rule in very precise terms. A considerable amount of experimental work on it has been done, mostly on lead and tin.

For dies with a radiused lead-in, Siebel found that for lead at room temperature, increasing radii gave a progressive reduction in extrusion pressure, amounting finally, with a very large fillet, to about 10 per cent. This is contrary to the general experience. Sachs and Eisbein recorded, also with lead, a pressure increased by 15–20 per cent over that for a sharp-edged die. In trials at high temperature with several soft metals the author obtained results which disfavour the use of large radii. Evidence from technical practice also supports the conclusion that this form of die puts up the pressure. Bernhoeft[17], for example, gives figures showing that for some brass alloys a radiused die such that $\frac{b}{a} = 2$ (Fig. 115) increased it by 25 per cent, and the same tendency has been observed with aluminium alloys. The slight radiusing adopted in most practice has only a small effect.

On the other hand, there is almost unanimous agreement that from the pressure point of view, an advantage is derived from the use of dies with a conical lead-in. From the reduction in the amount of deformation undergone by metal with dies of increasing conicity, as shown in Fig. 101 also, it might seem that the extrusion pressure would be diminished. Actually the lower force required in the working of the metal as the die angle is reduced tends to be offset by the greater area of the friction surface in the die. That is to say, that reduction in the amount of work expended internally is accompanied by an increase in the external losses at the tool surface. Experiments by Sachs and Eisbein with lead and tin indicate that the best compromise between these opposing factors is reached with a cone angle around 90° at which there is a definite minimum in the pressure, showing a reduction over the flat die of about 30 per cent. Where conical dies are used in practice they are usually of wider angle than this, between 120° and 160°, but even so the general concensus of opinion is that they effect a lowering of pressure in the region of 10–20 per cent. Exceptionally, Löhberg[18] has reported that, for zinc-base alloys, conical dies bring about a slightly increased pressure.

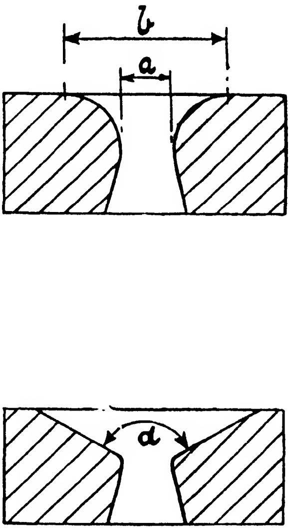

Fig. 115.

A characteristic of a die which has some influence on the pressure is the length of the cylindrical bearing in the aperture before it is relieved at the back side. This has been referred to earlier as affording a means by which the tendency for unequal flow through an irregularly shaped die can be controlled by varying the bearing length so as to retard flow at some points and accelerate it elsewhere. In extruding cold lead billets through carefully polished dies, Sachs and Eisbein found little difference in pressure with bearing lengths varying in the ratio 15 : 1, but drilled, unpolished, dies showed a difference in pressure of × 2 for the same variation. Considering the extremely wide difference in the bearing length, this change in pressure seems, perhaps, rather small, but the frictional effects in the case quoted may well be dissimilar to those in hot extrusion practice with other metals. There is, for instance, a strong tendency with aluminium alloys for the hot metal to bite on to and adhere strongly to a steel surface. Another point to be remembered in connection with the control of flow in a die is that, as shown above, the rate of extrusion is strongly affected by small changes in pressure, so that quite a small change in bearing length at some point in a die will have a marked influence locally on the rate of flow.

Multiple-hole dies are often used in extruding small sections. It is obvious that the pressure required when several holes are provided will be greatly reduced over that for one hole of the same size. Actually the pressure when using several holes is reduced almost to that for one large hole with a sectional area equal to the sum of the smaller ones. Thus, with lead, a three-hole die called for only 10 per cent, and a four-hole die for 22 per cent, more pressure than a single hole of the same total area.

REFERENCES

[1] G. Tammann. On the Rate of Extrusion of Crystalline Substances. *Ann. Physik.*, 1902, **7**, 198; 1903, **10**, 647.

[2] A. Portevin. Experiments on the Compression and Extrusion of Metals and Alloys at High Temperatures. *Rev. de Metallurgie*, 1929, **26**, 435–43.

[3] F. Körber. The Plastic Deformation of Metals. *J. Inst. Metals*, 1932, **48**, 317–42.

[4] E. Siebel and E. Fangemeier. Researches on Power Consumption in the Extrusion and Punching of Metals. *Mitt. K.W. Inst. für Eisenforschung*, 1931, **13**, 29–43.

[5] G. Sachs and W. Eisbein. Power Consumption and Mechanism of Flow in the Extrusion Process. *Mitt. Material*, S. **16**, 1931, 67–96.

[6] C. E. Pearson and J. A. Smythe. The Influence of Pressure and Temperature on the Extrusion of Metals. *J. Inst. Metals*, 1931, **45**, 345–69.

[7] C. E. Pearson. *Ibid.*, 1939, **64**, 299–310.

[8] E. Siebel and E. Fangemeier. *Ibid.*

[9] G. Sachs and W. Eisbein. *Ibid.*

[10] V. A. Bobrov. The Relation between Specific Pressure, Temperature and the Elongation Factor (in the Extrusion of Light Metals). *Trans. Sci. Res. Inst. Light Metals—" Nüsalumini"*, 1933 (1 and 2), 63–73; (3), 31–51; 1933 (5), 32–43.

[11] C. Fink. *Z. Bergwes. Preusz*, 1874, **22**, 200.

[12] E. Siebel and E. Fangemeier. *Ibid.*

[13] V. V. Zholobov. The Pressure of Flow in the Hot Extrusion of Non-Ferrous Metals. *Metallurg.*, 1937, **8**, 77.

[14] F. Doerinckel and J. Trockels. The Hot Working of Brass. *Z. für Metallkunde*, 1920, **12**, 340.

[15] R. Genders. The Aluminium Brasses. *J. Inst. Metals*, 1930, **43**, 163–80.

[16] W. P. Schishokin. The Extrusion Properties of Metals and Alloys at Different Temperatures. *Zhur. Priklad. Khimii*, 1929, **2**, 663.

[17] P. Bernhoeft. The Operation of a Directly-driven 1500-ton Press. *Z. für Metallkunde*, 1932, **24**, 210–13, 261–3.

[18] K. Löhberg. *Ibid.*, 1939, **31**, 279–83.

CHAPTER VII

METALS AND ALLOYS FOR HOT EXTRUSION

THERE are wide differences in the facility with which metals can be extruded : while certain ones lend themselves readily and present few problems, others are, in varying degree, more difficult and make special demands on technique and equipment. Among the reasons which contribute to this are differences in the stiffness of the metals and the length of their extrusion range, and also the position on the temperature scale of these ranges. In a number of cases trouble mainly arises from the susceptibility to speed effects shown by some metals. It is, of course, with the difficult materials that the operating conditions become of chief concern, since for those that are soft and have a long plastic range no closer control is required than will suffice to give ready extrusion and the attainment of suitable properties and structures.

The Extrusion Range. The full range for hot-working a metal can be regarded as lying between temperature limits at which, on the one hand, it becomes hot short, and, on the other, marked work-hardening sets in or the force required to deform it becomes excessive. Thus, for extrusion, it extends from a temperature at which the metal cracks or breaks up as it leaves the die down to one at which, under the full power of the press, the billet fails to extrude and becomes a " sticker " in the container. This interval depends primarily on the metal itself, and may be long or short, depending on the softness and plasticity which it acquires and retains with altering temperature, some metals being inherently stiff by comparison with others. The length of the working range is also reduced, as already mentioned, in alloys in which, from their constitution, hot shortness persists to low temperatures. Now it is clear that the limits of extrusion can only be defined in the above way with reference to other factors. For instance, it is obvious that the stalling point in a given case will depend on what pressure can be applied to the billet. It will depend therefore on the total power of the press in relation to the size of the container and the dimensions and shape of the product to be made. In direct extrusion the length of the billet, too, will be material, since it affects the pressure which is required. Within limits, the fitting of a container of smaller diameter, where the overall dimensions of the required section permit this to be done, confers a twofold advantage in extending the range and easing extrusion because less pressure is needed for the lower reduction which is then involved, and also because greater pressure is available on the smaller sectional area (Table 7). A resort to this expedient can only be taken so far, for when extrusion temperatures are high a contrary influence arises from the rapidity with which a small billet loses heat: while the cooling surface of a billet decreases with reduction in its diameter, its total heat capacity varies as the square of its diameter. There is, besides, a limit to the stress that can be imposed on the extrusion ram; this is not usually taken above 75 tons per square inch, although ram pressures up to 100 tons per square inch are sometimes employed. Moreover billets of small diameter, by causing a reduction in the amount of work put upon the metal, may adversely affect its mechanical properties.

TABLE 7

Capacity of Press Tons	Diameter of Container In.	Corresponding Maximum Pressures on Extrusion Ram Tons/sq. in.	
1000	5, 6, 8, 9	51, 36, 20, 15·5	Screwing, stamping and high-tensile brass, 70/30 brass, copper, and up to 12 per cent nickel-silver
2000	5, 6, 7	100, 72, 55	Nickel, cupro-nickel, monel, inconel, etc.
5000	12, 15, 20	44, 30, 16	Duralumin and high-strength light alloys

The question of the cooling of the billet during the extrusion operation is an important one, for the possible working range becomes reduced by the amount of the temperature fall, and the initial temperature of the billet must be high enough to allow for the loss. In cases where the cooling is considerable the latitude left for the conduct of the extrusion may become very small. For this reason one is often concerned in practice not so much with the interval in which the working of a metal would, theoretically, be possible under steady temperature conditions as with the permissible variation in the temperature at which billets are fed into the press, and it is with the latter connotation rather than the former that the term " extrusion range " is ordinarily used. The extent to which heat is lost during extrusion depends on the relative temperatures of the billet and its surroundings, its dimensions, and the time it is in the press. With metals such as lead, magnesium and aluminium, extruding at fairly low temperatures, the container can be kept hot enough to minimize any change, but when extrusion temperatures from 900° C. and upwards to 1200° C., many hundreds of degrees above the press components, are necessary, serious chilling is liable to occur. Thus the higher the temperature required for extrusion the shorter the effective range tends to become.

For metals possessing only a short working range, and especially one lying at high temperatures, it is clear that the speed of extrusion becomes of paramount importance. To extrude such materials from a press in which the ram speed is limited may be impossible or require the most critical control of preheating temperatures, whereas a press with a rapid stroke allows comfortable latitude. At the highest temperatures, a serious problem is to find tool materials that will stand up to the work. In this connection, also, rapidity of operation is a vital consideration both to avoid excessive damage under the heavy pressures that are occasioned if the temperature is allowed to fall, and to prevent long exposure of the tools to the hot metal. The most durable and resistant steels yet available lose strength and undergo rapid destruction by abrasion if they are permitted to rise above 600°–700° C.

From the foregoing it is evident that an exact extrusion range for a metal applicable in all circumstances can not be specified. For the readily extrudable materials this is of no particular consequence, and it is only necessary to select a mid-range which will give the required results. Where stringent limits are put forward for an especially difficult alloy, covering perhaps as little as 10° C., it will be seen that they bear strict reference only to certain sizes, and to particular plant conditions which involve the power of the press and the rate at which it is operated, the container size, and the precautions taken to conserve heat by heating the container, etc. One result of this is that it is not uncommon to find temperature limits designated from one source for an alloy which are less stringent than those insisted upon from another. It also occurs sometimes that the temperatures proposed cover slightly different ranges. The latter is not surprising in view of the real difficulty that there is in measuring the true temperature, where this is high, of the billets leaving the preheating furnace. Apparent temperatures observed by optical pyrometer, or those measured by contact instruments, are satisfactory for control purposes but are not readily converted into true figures.

The sensitivity of some metals in regard to the speed of their extrusion is referred to later in this chapter.

Brass and Other Copper Alloys. The extrusion process is probably still most familiarly associated with its application to various brass alloys, for not only were they the first of the harder metals to be used in this connection, but they continue, in a multitude of extruded forms, to occupy a position of the highest industrial importance; this being especially the case for those ranging in composition from 55 to 65 per cent of copper, which easily predominate in terms of quantity over the other members of the series. In general, the ease with which they can be extruded and the number and intricacy of the shapes it is possible to produce falls off as the copper content increases, so that, although the whole range of commercial brasses can now be extruded without much trouble, by far the greatest choice of manufactured forms is to be had between the above limits. The reason for this lies in the fact that alloys belonging to the β and $\alpha + \beta$ series, the latter reverting to β at high temperature, are characterized by their extreme plasticity, which they retain between 600° C. and 800° C. With slightly more difficulty, due to their greater stiffness, and the rather higher temperature which is needed, as already indicated by Fig. 112, the α brasses, the more important lying about 70/30 in composition, are now available in all but the most complex shapes. To be capable of hot working the lead content of these alloys must be low.

The purposes to which extruded brass products are put may be roughly classified as follows: (*i*) For use as extruded in the form of channels, tees, box, girder and such-like sections for constructional applications; and as tubes, for condensers, heat exchangers, distillation plants, and so forth. (*ii*) For further fabrication in the engineering industries, extruded material forms a convenient starting-point. Instances are to be found in rod and wire made in free-machining alloy for high-speed automatic machines; stock for forging and hot stamping; blanks in high-tensile alloys for gears and pinions; tube for roller and ball-bearing cages. (*iii*) In a variety of special shapes and hollow forms for electrical and architectural purposes, shop fronts, doors, stairways, decorative trimmings in transport vehicles, etc. A small selection from the many thousands of current brass sections are illustrated in Fig. 116.*

It would serve no useful purpose to attempt an exhaustive catalogue of the various brass alloys which are used in these ways, and mention must be confined to a few representative examples. A large percentage of the output consists of free-cutting brass with 57–60 per cent of copper—or rather higher in American specifications—and 2·5–3·5 per cent of lead, employed for rapid screw-machine work. Hot stamping brass, with 57–59 per cent copper, generally with lead up to 2 per cent, is an important product, as, too, is naval brass. High-tensile brasses, or, as they continue to be better known, manganese bronze alloys, which, due to high mechanical properties combined with good resistance to corrosion have many applications, and are very serviceable under marine conditions and for certain types of chemical plant, are commonly produced in the extruded form. They are among the most easily extruded of the copper alloys.

Copper, while it is capable of being hot-worked over an extensive range of temperature, is distinctly harder when hot than most brasses. It can, however, be obtained in all the common extruded forms, as round, hexagon and flat sections, and is produced in large quantities as tubing. Production is made in the arsenical, high-conductivity, deoxidized and tough grades.

Tables 8 and 9, compiled by Crampton [1], give a convenient summary of copper alloys used in the form of extrusions, and of their average properties. Table 10, derived from data given by Bernhoeft [2], gives some indication of the relative extrusion pressures for different brasses. These were obtained from a directly driven 1500-ton press working at a speed of 0·5 in. per second, which, though rather below what is now a normal rate for such alloys, was constant for all, so giving them a comparative value. The figures are comparative also in that they refer to the extrusion in each case of 1-in. diameter rods from billets 6·5 in. in diameter (extrusion ratio 42).

---

* Facing page 152.

TABLE 8

COPPER-BASE EXTRUDED ALLOYS—ROD

Alloy	Approximate Composition *							Approximate Temperature Range for Extrusion °C.	Approximate Mechanical Properties as Extruded		Most commonly used Temper	Approximate Mechanical Properties for such Temper	
	Cu	Pb	Sn	Ni	Mn	Al	Misc.		Tensile Strength Lb./sq. in.	Elongation percentage in 2 in.		Tensile Strength Lb./sq. in.	Elongation percentage in 2 in.
Free-cutting brass	61·5	3·5						700–760	48,000	45	Drawn	55,000	30
Forging brass	60	1·75						680–730	50,000	45	As extruded	50,000	45
Architectural brass	58	3						650–700	54,000	45	As extruded	54,000	45
Naval brass	60		0·75					650–730	55,000	45	(Light drawn)	63,000	25
											(Hard drawn)	70,000	25
Free-cutting naval brass	60	1·5	0·75					650–730	55,000	45	(Light drawn)	63,000	35
											(Hard drawn)	70,000	25
Manganese bronze	57·5		1		0·05		1 Fe	620–700	65,000	35	Drawn	80,000	20
Muntz metal	59							680–730	52,000	45	Drawn	62,000	30
Rivet metal	63							700–760	46,000	50	(Rivet temper)	60,000	35
											(Hard drawn)	80,000	10
Free-cutting commercial bronze	89	2						700–820	36,000	50	Drawn	45,000	30
Copper	100							820–900	32,000	40	Drawn	42,000	25
Leaded copper	99	1						820–900	32,000	40	Drawn	42,000	25
Silicon bronze	96						3 Si	790–840	53,000	70	(Drawn half hard)	73,000	45
											(Drawn hard)	90,000	35
											(Drawn extra hard)	108,000	25
10 per cent nickel-silver	45	2		10	0·5			700–760	80,000	10	As extruded	80,000	10
13 per cent nickel-silver	41	1·25		13	0·5			700–760	90,000	7	As extruded	90,000	7
Nickel-aluminium bronze	91			7·5		1·5		760–820	50,000	45	Quenched and aged	100,000	20
Nickel-aluminium bronze	85			12·5		2·5		870–930	60,000	35	Quenched and aged	125,000	10
Aluminium bronze (5 per cent)	95					5		820–870	50,000	60	Drawn	70,000	30
Aluminium bronze (8 per cent)	92					8		730–790	60,000	60	As extruded	60,000	60

* Properties shown are *average*. Balance in all cases is zinc. Includes all types of copper.

(*Reproduced by courtesy of the American Society of Metals.*)

TABLE 9

COPPER-BASE EXTRUDED ALLOYS—TUBE

Alloy	Approximate Composition						Approximate Temperature Range for Extrusion ° C.	Approximate * Mechanical Properties			
								As Extruded		After Final Condenser Tube Anneal	
	Cu	Ni	Al	Sn	Pb	Zn		Tensile Strength Lb./sq. in.	Elongation percentage in 2 in.	Tensile Strength Lb./sq. in.	Elongation percentage in 2 in.
High brass	66·5				0·5	33	660–690	45,000	65	50,000	55
Admiralty brass	70			1		29	650–680	46,000	65	52,000	60
Red brass	85					15	775–800	38,000	50	44,000	42
Aluminium brass	76		2			22	730–760	48,000	65	52,000	60
Ni silver, 18 per cent	65	18				17	870–900	55,000	45	60,000	40
20 per cent Cupro-nickel	75	20				5	980–1010	48,000	40	53,000	35
30 per cent Cupro-nickel	70	30					1010–1050	54,000	35	63,000	30
Silicon bronze	96		3 Si			1	730–760	53,000	65	60,000	60
Nickel-aluminium bronze	92	4	4				820–850	50,000	45	60,000	30
Aluminium bronze	95		5				800–830	50,000	55	58,000	35

* Properties shown are *average.*

(Reproduced by courtesy of the American Society of Metals.)

TABLE 10

Material						Usual Extrusion Temperature ° C.	Minimum Extrusion Pressure Tons/sq. in.
Cu	Zn	Pb	Sn	Al	Mn		
100	–	–	–	–	–	870–910	19·4 (880° C.)
62·5	37·5	–	–	–	–	780–790	—
58	40	2	–	–	–	760–780	13·5 (750° C.)
56	40·5	–	–	1·5	2	730–780	11·9 (760° C.)
67	33	–	–	–	–	790–810	25·4 (790° C.)
60	39	–	1	–	–	750–780	14·9 (770° C.)
48	41	1	nickel 10%			760–780	23·9 (770° C.)

As material comes from the press, it is liable to show some deviation from the nominal dimensions to which it is being made. This arises for such reasons as gradual alteration in the die during use, and the thermal contraction of the metal in cooling from the working temperature. In the case of brass an allowance of 0·02 in. per inch is usually provided when the die is made, to offset the latter. More difficult to eliminate entirely is the variation in size which is apt to occur between the leading and back ends of an extruded length owing to the alteration in the temperature at which the metal passes through the die. In an actual example quoted by Wragg[3], for a bar for which the specified diameter was 1 in. ± 0·004 in., the first 3 ft. were just on the lower limit, over the next 34 ft. the bar was inside the top limit of 1·004 in., while the last 21 ft. were above this, with a maximum diameter of 1·006 in. For many purposes the order of accuracy obtainable is sufficiently near for the intended application, and no further processing other than straightening is required, but a bar such as the above can be brought within finer limits and made serviceable over its full length at little additional cost by light drawing, which also has the advantage of sharpening up the profile of sections to which it is applied. The exacting specifications needed for engineering work must be met by drawing or reeling or both.

Extruded brass rod can be obtained in all sizes from $\frac{3}{16}$ in. to 5 in. diameter, tubes up to 5 in. o.d., with wall thicknesses ranging from $\frac{1}{20}$ in. on small sizes up to $\frac{3}{4}$ in. A few of the usual manufacturing limits are given below, though somewhat closer tolerances than these can be worked to, the cost being increased in order to provide for a greater proportion of reject.

Examples of normal manufacturing limits:

Round bars $\frac{3}{16}$–$\frac{7}{16}$ in. diameter inclusive ± 0·002 in.
" " 1–$1\frac{3}{8}$ in. " " ± 0·004 in.
" " above 2 in. " " ± 0·008 in.
Tubes and hollow sections
on outside diameter up to 3 in. ± 0·003 in.
on inside diameter up to 3 in. ± 0·010 in.

Concentricity

Tubes up to $1\frac{1}{2}$ in. o.d. 0·01 in. out of centre
above 2 " " 0·02 " " "
above 3 " " 0·025 " " "

Aluminium bronze. This is an important series of alloys which can be taken as falling into two main groups. In the first the principal alloys, containing 4–8 per cent of aluminium, while considered primarily as cold-working alloys, can also be extruded at about 850° C., and are now used extensively in the making of condenser tubes. Their working behaviour is similar to that of 70/30 brass, than which, however, they are rather stiffer. The second group of alloys, running mostly from 9 to 10 per cent of aluminium, are the more widely used for extrusion. Their working qualities are excellent and a very full range of sections can be made, extruding at 850°–900° C., where they are only little less plastic than is 60/40 brass at 750°–800° C. They are attractive on account of their high strength associated with the ability to withstand electrolytic and direct corrosion and also behave well under erosive conditions.

The Tin-bronzes. The position in regard to these alloys is interesting. Up to a short time ago, the application to these of extrusion had made very little progress, and only those containing up to 4 or 5 per cent of tin were a practicable proposition. The chief difficulty in hot-working those of higher tin content lay in the presence, in the cast alloys, of excessive amounts of the hard δ constituent and in its uneven distribution owing to inverse segregation to which these alloys are especially susceptible. While this could be overcome to a limited extent by annealing so as to bring about the absorption of the δ phase, the degree of heterogeneity made this an inordinately long process, and the extrusion of bronze containing up to 9 per cent tin, after homogeneizing them in this way, was of no great practical significance. As the result of modifications in foundry technique, a remarkable change has been brought about. Lepp[4] has shown that, by steps taken to eliminate the gas absorbed in the molten alloys, a nearer approach to an equilibrium structure in the cast ingot is obtained, less δ is formed, and segregation becomes inappreciable. The degassing is accomplished by a process * known as selective oxidation in which a controlled addition of copper oxide is made to a neutral or basic slag as it lies on the alloy.

Extrusion billets of bronzes with 10–14 per cent of tin, prepared in this way, become homogeneized sufficiently to enable them to be extruded after an annealing period of only about 4 hours at 650° C. Although it is well known that the extrusion of bronzes on a technical scale has now been developed, very little data regarding it has yet been published. Brownsdon[5] has referred to the excellent mechanical properties obtainable from extruded gun-metal, quoting an ultimate tensile strength of 31 tons per square inch, with elongation of 75 per cent.

Phosphor-bronzes. The situation in respect of these is similar to that of the ordinary bronzes, and it would seem that somewhat parallel progress has been made. Lepp[6] has given figures for the properties of an extruded bronze with 8 per cent of tin, and various amounts of phosphorus, as follows:

TABLE 11

Phosphorus Per cent	E.L. Tons/sq. in.	U.T.S. Tons/sq. in.	Elongation Per cent
0·33–0·36	13·3–14·0	28·5–29·8	62–58
0·39	14·6	29·6	57
0·44–0·54	14·0–14·6	29·8–31·0	63
0·64–0·80	14·0–15·2	31·7–32·8	61–59
0·80–0·90	15·2–19·0	33 –34·5	53–48

Among comparative new-comers in the field of extrusion are the *nickel-aluminium bronzes*, from which, when advantage is taken of their capacity for undergoing precipitation hardening, extremely good mechanical properties are obtainable.

---

* Brit. Pat. No. 436,204.

The Silicon-bronzes have assumed importance in recent years and have found considerable application in the U.S.A. Although consisting essentially of copper alloyed with 2–4 per cent of silicon, other metals as, for example, iron, manganese, zinc, tin, aluminium, and lead are frequently also present in small amounts. They can be extruded in the majority of forms, and are in demand for their strength and non-corrodible properties.

Nickel-silvers. The ternary alloys of copper-nickel-zinc may be divided into two classes. The better known of these, the nickel-silvers, contain from 8 to 30 per cent nickel; 10 to 30 per cent zinc, and come within the limits of the α solid solution range. Mainly regarded as cold-forming alloys, they can also be hot-worked by rolling and extrusion. The latter is relatively easy if the nickel content lies not higher than 10–12 per cent, but above this they become increasingly stiff, and this calls for progressive raising of the extrusion temperature as the percentage of nickel is increased. The range for satisfactory working becomes short, and demands careful control of preheating and press operation. By reason of their more silvery colour and greater freedom from tarnishing, the high nickel members of the series have come into prominence, notably for decorative and architectural work, a typical alloy for this purpose containing 18–20 per cent nickel, 20 per cent zinc. For ordinary sections this material is extruded at 870°–890° C.

The second group, often referred to as nickel brasses, are those which consist of the α and β phases of the system in proportions varying according to their composition, which is found between 8 and 18 per cent nickel, and 38 to 45 per cent of zinc. These are hot-working alloys which lend themselves to extrusion rather more readily than the nickel-silvers, at temperatures in the neighbourhood of 800°–850° C., in the production, chiefly, of forging stock.

Cupro-nickel. The straight copper-nickel alloys, or cupro-nickels, constitute an important group in connection with their use for condenser tubes. The alloys first employed for this purpose about 1922 were of lower nickel content than the 70/30 mixture, which has now been found to be the most satisfactory. To begin with, the tubes had to be made by boring out the cast billets and subsequently drawing them. This was a most tedious and costly method of manufacture. However, the excellent properties of the alloys provided a stimulus to the solution of the, at first, serious problems encountered in extruding them. One of the main obstacles to be overcome lay in the inability of the press tools to withstand the pressures and temperatures involved, and this was only finally remedied by the advent of tungsten-chrome steels for these parts. In the manufacture of 70/30 cupro-nickel tubes, the billets are turned to remove surface blemishes and skin defects. The practice widely followed is to extrude tubes close to the final size, about 1 in. o.d., $\frac{1}{8}$ in. thick in the wall, so leaving a minimum of cold drawing to be done. For this purpose, the billets are bored out, since piercing mandrels of this size are not robust enough to stand up to the operation. As mentioned earlier, the alternative method of piercing and extruding thicker shells of larger bore from horizontal presses, and bringing these to the required dimensions in tube-reducing machines, has lately been found advantageous.

High Nickel Alloys. The progress made in widening the range of extrudable copper alloys, made it possible to contemplate the extrusion of more refractory materials, and for some time now it has been a commercial proposition to deal in this way with a number of nickel alloys, and to extend the process also to certain steels. Among the former is monel metal, containing 65–70 per cent nickel, about 27 per cent copper, with small amounts of other elements, such as iron, manganese, and silicon, which has a high repute because of its immunity from attack by sea water and in a great many other media, in addition to having good strength properties at high temperatures. It will be well understood that the toughness and resistance to deformation possessed by this alloy when hot is not conducive to its easy extrusion. However, both monel and the related dispersion-hardening alloy, K-monel, are being made in the form of a number of the more simple engineering sections and as tube. Certain of the nichrome alloys, such as inconel, with 80 per cent nickel, 12–14 per cent chromium, remainder iron, which possess to a degree even more marked than monel the property of heat resistance, are now being extruded with success in the range 1150°–1200° C., even though production is limited as yet to rounds, hexagons, squares, and some tubes. A description of the extrusion of these has been given by Graham[7].

The Extrusion of Steel. The term extrusion is frequently used in connection with certain press-forging operations, such, for example, as the manufacture of automobile valves, in which the extrusion principle is also involved. A description of these is included in Chapter X. They are, however, quite distinct from extrusion proper in which the product is of constant dimensions determined by the form of the die orifice through which the metal flows. Such extrusion of steel is a direct development from the ordinary hot process for non-ferrous metals. The practicability of making seamless steel tubes in this way—which is the principal application—was only demonstrated in England in 1928, and regular commercial production was not under way until about 1937. The temperatures to bring steel to a sufficiently plastic state for extrusion are much higher than with the general run of non-ferrous metals, and it is this more than anything else which has constituted the main difficulty. The pressures which are necessary vary with the composition, but in most cases are not excessively high. The resistance to deformation of the majority of steels in the region of 1100°–1250° C. is actually not so high as for some of the nickel alloys, and is roughly 50 per cent above that for most of the copper alloys. The real difficulty is to find tool steels which are capable of withstanding these pressures at the temperatures involved. Wear and tear suffered by the tools—to which oxide scale on the billets is a contributory factor—is extremely severe and tends to make the production of tubes in the cheaper grades of steel an uneconomic proposition, hence manufacture has been confined for the most part to the more expensive austenitic type of stainless steels. The successful extrusion of steel depends primarily on securing a high rate of working. It is essential to extrude at an average speed of 4 in. or more of billet length a second so as to avoid the damage which the tools would sustain if their contact with the highly heated metal were prolonged. In its modern form the hydraulically operated press, both vertical and horizontal, can be made to fulfil this requirement, and this type has found preference in America and England over the mechanical press. The general practice is to scalp the billets before preheating them and to extrude without leaving a skull. With the chrome-nickel austenitic steels this is the more feasible since they are not subject to excessive scaling during preheating, though in any case precautions against this can be taken by the maintenance of a suitable furnace atmosphere. Conical dies are generally used, and special attention is paid to the lubrication of the die, mandrel and container, using an oil-graphite paste, to ensure a good surface finish.

Much attention has been given in Germany recently to the extrusion of steel tubes in powerful mechanical presses which, though they do not compare so well in some respects with hydraulic machines, have the advantage of giving a very rapid stroke. Evans[8] has described the method developed at the Mannesmann works for making tubes of small bore which is applicable to low-grade Bessemer steels as well as to special alloy steels. The output of tubes had already reached 4000 tons a month before the war. The process is fundamentally the same as in non-ferrous tube extrusion. A solid billet at 1250° C. is placed in the container, where it is pierced and then extruded in one press stroke. The very heavy press shown in Fig. 117 will extrude at the high rate of two billets a minute. Actual extrusion occupies only 3–4 seconds, the remainder of the time being taken in cutting off, cooling the tools, and in inserting a fresh billet. The billets are prepared from long steel bars which are nicked and broken into suitable lengths. After preheating they are passed rapidly through a descaling mill, the rollers of which detach the oxide scale, before they are transferred to the press. The hot tubes, up to 40 ft. in length, are at once fed into reducing rolls arranged in sequence to give the required diameter and wall-thickness. Finally they are passed to travelling cooling racks which carry them to the automatic machines which screw the ends. The tubes produced are up to 65 ft. long, in diameters of $\frac{3}{8}$ in., $\frac{1}{2}$ in. and $\frac{3}{4}$ in., with the usual wall-thicknesses. As compared with methods involving cross rolling, which tends to open out and extend defects present in the original steel, the production of tubes by extrusion has the merit that such defects are closed up by the action of the all-round pressure in the latter process.

The Extrusion of Light Alloys. The earlier preoccupation of extrusion with copper alloys has been modified in a striking fashion by the employment of the process on a quickly growing scale for aluminium and magnesium alloys. Development has been accentuated, as is well known, under the stimulus of the urgent need for aircraft and aeromotor components for which, by reason of their high strength/density ratio, these alloys are so suitable, especially for high-speed and reciprocating parts. In all industrial countries a heavy programme of plant expansion was pressed forward in the years immediately preceding and after the outbreak of the war, and production has now reached a high tonnage. It is an important augury for the future prospects, however, that as distinct from the immediate wartime requirements, there are innumerable instances where the saving in weight and other economies rendered possible by the use of such materials, as in rail and road transport, the textile, building and other industries, make them attractive and their possibilities are already well realized. It is in these directions, many of them already exploited as fields for the application of light alloys, that much activity must be looked for in the post-war period, and it seems probable that after not too long an interregnum the large plant capacity for their extrusion which will then be available will find full occupation.

Besides the fabrication of sections in almost the finished form, extrusion has an extremely valuable function to perform in converting the rather fragile cast structures into a stronger fine-grained condition, so rendering them better able to withstand further working in the forge or rolling mill. In many works dealing with the high strength alloys of both groups, pre-extruded material is used for all subsequent shaping operations. Pre-extruded billets made in a large press are, in fact, sometimes extruded in a second stage into the final shapes in which they are required. All the same, extrusion is not an invariable preliminary to the working of all light alloys; some of the softer aluminium and magnesium alloys can be rolled satisfactorily from the ingot, and even for duralumin a slabbing mill is used in some instances for the breaking-down process.

Extrusion Presses for Light Alloys. The equipment required is essentially similar to that in use for copper alloys, the principal differences arising out of the need for speed and temperature control in the presses; in the types of billet preheating furnaces; and from the somewhat different work requiring to be done after extrusion in heat-treating and straightening. Aluminium alloys in particular are required in the form of large engineering sections, and to obtain them in the gauges and in the lengths, up to 70 ft., which are called for in aircraft spars, etc., it has been found necessary to lay down very heavy presses. In this there has also been envisaged the probable future requirements for light alloy sections to take the place of rolled steel in a number of applications. Both in England

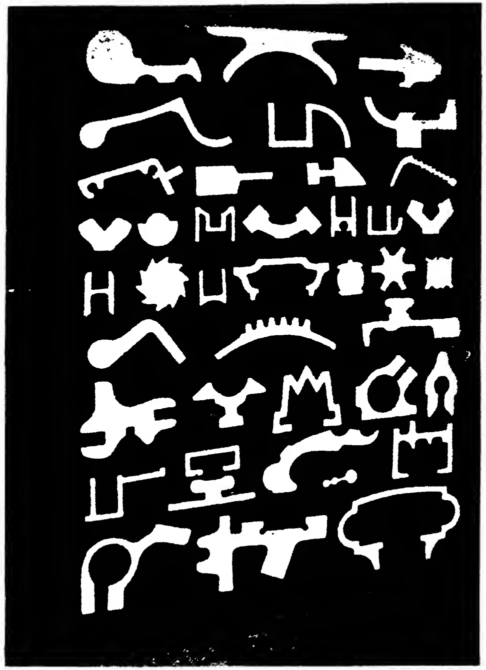

FIG. 116.—Selection of extruded brass sections.

(*Courtesy of Delta Metal Co.*)

(*See page* 142).

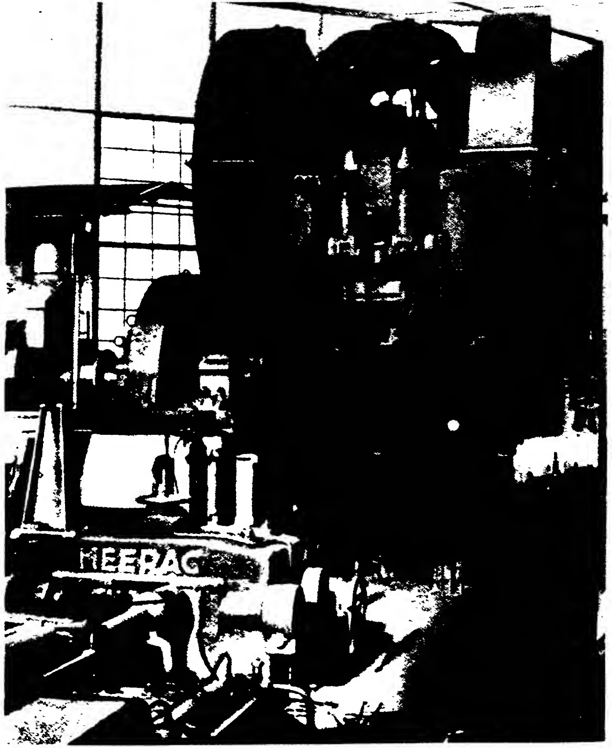

FIG. 117.—Heavy mechanical press used in the extrusion of steel tubes.

(*Courtesy of " Iron and Steel Industry.*")

[*Facing page* 152.

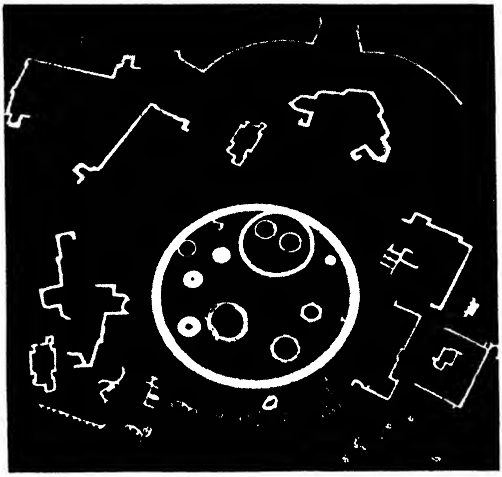

FIG. 118.—Extruded sections in aluminium alloy.

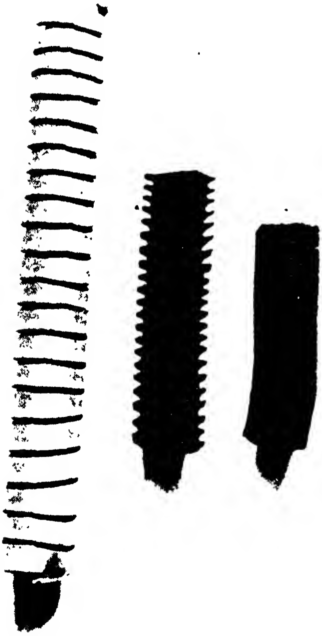

FIG. 119. (*See page* 156.)

and Germany a number of units rated at 5000 tons, suitable for dealing with billets up to 4 ft. in length and 20 and 16 in. diameter, in soft and strong alloys respectively, have been brought into use. A press now in service with Reynolds Tube Ltd. in Birmingham, with a capacity of 5600 tons pressure, is designed to handle high-tensile alloys in billets 20 in. in diameter, weighing roughly ¾ ton, from which sections lying within a 16-in. circle, and tubes up to 12 in. in diameter, can be formed. A selection of extruded light-alloy sections is shown in Fig. 118.

The low throughput consequent on the very limited rates of extrusion which it is possible to use has made it desirable to fit hydraulic speed indicators, covering the ranges from 0·01 in. per second to 1 in. per second, so as to enable the maximum safe speed, once this has been determined in any given case, to be maintained. Since, for the above reason also, a single extrusion may occupy as much as 20 minutes, the adoption of special methods of container heating, already described, is required in order to maintain the metal within what is often a narrow extrusion range. In addition, a small automatically regulated furnace is generally provided adjacent to the press to preheat dies, mandrels, and pressure-discs ready for use.

The importance of supplying billets as homogeneous and free as ever possible from casting defects of all kinds as a prerequisite to the production of sound extrusions, is certainly no less for these alloys than for any others, and calls for the adoption of suitable technique in melting and casting procedures. Several types of melting furnace are in use, of which the electrical resistance or low-frequency methods are preferable owing to reduced danger from turbulence, and of gassing from the presence of water vapour which is apt to arise in other types. Besides the more usual casting methods employing chill moulds, thin water-cooled moulds are also used, and it is interesting to note that continuous casting machines have reached the stage of development at which they have been introduced on a practical scale in preparing extrusion billets in light alloys. A unit for this purpose was installed in Birmingham in 1939, and this example has since been followed elsewhere.

As a starting-point in the extrusion of tubes and hollow forms in aluminium alloys, hollow billets are made either by casting round steel cores in the moulds or by boring from solid billets. The high-strength alloys in particular are not well suited to piercing on account of their stiffness, leading to damage to the piercing tool and giving it a tendency to wander. Moreover, there is considerable risk in making a quick piercing stroke in these materials of forming cracks and tears along the bore, leading to internal defects in the tube when it is formed.

It is customary in good practice to remove the strong oxidized casting skin by machining all over the surface of the billets. A difficulty in regard to aluminium and its alloys is that of removing the layer of metal remaining on the wall of the container after extrusion. This layer, the thickness of which depends on the annular clearance round the pressure disc, can not, as in the case of the skull which is often cut when extruding copper alloys, be completely detached, since it alloys with the container. A tight-fitting clearing disc is used to eject most of it, leaving a thin smeared layer behind. In some works the disc is put through after each extrusion; in other cases the layer is left to accumulate during several operations. Its frequent removal is of considerable importance since it will embody the outer skin of the billet which must always be oxidized to some extent, and this may contribute, if left, to the formation of the familiar extrusion defect in the following extrusions. In discussing this question, Colombel[9] states that failure to clear the container can give rise to blisters on extruded material, and that responsibility for this has been established by the fact that the skin of such blisters has been shown to have the composition of the preceding billet, where this has been of a different alloy.

The Control of Extrusion Speed. There is need now to discuss the question of the rate of extrusion in some additional aspects to those already touched upon. So far the general influence of it on the pressure for extrusion has been dealt with, and the necessity when working at very high temperatures for extremely rapid operation has also been stressed. It is not uncommon to find rates being used for some copper alloys as high as 8 in. per second, with small sections leaving the press at velocities up to 2000 ft. a minute in vertical working. In contrast with this there are many metals belonging to diverse groups of alloys, such as those of aluminium-, magnesium-, lead-, and zinc-base which are distinctly sensitive in respect of the rate at which deformation is carried out on them. If certain critical speeds, which depend on the alloy, the temperature, and the size and shape of the extruded part, are exceeded, characteristic faults ranging from roughened, torn or repeatedly cracked surfaces to more complete disintegration are exhibited.

It can scarcely be said that the cause of this is understood with certainty in every case, but there are several factors which can be regarded as possibly contributing. Among these are (*a*) differential stresses set up owing to unequal distribution of flow through the die aperture, (*b*) a rise in the temperature of the metal due to the heat generated by internal and external friction in the course of deformation, (*c*) strain hardening caused by working which may not be removed sufficiently rapidly by recrystallization: thus in magnesium alloys, in which relief occurs somewhat slowly, it is possible for the capacity of the metal for deformation to become exhausted if work is applied rapidly. The first of these has already been discussed: liability to cracking from hot shortness arises in all metals when the attempt to work them is made at excessively high temperature, but its onset is naturally earlier in those alloys in which either from their constitution or due to lack of equilibrium in the cast condition, a liquid phase occurs at low temperatures. When this is combined with inherent stiffness so that extrusion must be confined to a narrow range close to the point of incipient fusion, the likelihood of trouble becomes greater. The second factor above has a bearing on this. It is not difficult to show that the temperature of metal may rise considerably during extrusion. For instance, it has been observed in the laboratory that lead extruded cold at a fairly high rate emerges from the press at over 100° C. A similar observation can often be made in ordinary practice where the egress temperature of aluminium alloys may be found to be as much as 60° above the billet temperature. It is evident that most of the heat generated will be in the zone where deformation is most severe, in the region near the entry to the die, and is likely to be marked in the very heavily worked zone near the surface of the section, where there is also friction at the bearing surface of the die. When extruding slowly, the generation of high local temperature tends to be prevented by the dissipation of heat into the surrounding mass, and into the tools, but at high rates, when moreover the heating is greater on account of the enhanced pressure which is required, the temperature may easily be raised far enough to bring the surface layers to the point where hot ruptures develop. Fig. 119* shows typical examples of the cracking which is encountered. All the cases of this kind examined by the author have shown that the path of rupture is intergranular. The same fault may on rare occasions be met with in brass, but, partly because the heat engendered by working tends to be more than counterbalanced by the effect of the cooler container and die, and also because most of the alloys allow of being extruded at temperatures well below the danger-point, it does not ordinarily interfere with the use of high extrusion rates. It is usually due, when it occurs, to the billets being too hot, and it is then sufficient when the front end of the bar is seen to be cracked, to ease back the pressure on the press for a few moments.

In the extrusion of aluminium alloys, indication that the rate is on the high side is first given by a scored, broken surface on the material. This is due to fouling of the die apparently as the result of alloying between it and the metal, occuring, maybe, when a critical temperature is attained. " Pick-up " of this kind constantly tends to occur when working close to the maximum permissible speed, and makes it necessary to dress up the die with emery cloth between operations. Interesting experiments† have been made by the Aluminium Company of America to avoid pick-up, and so make possible a higher rate of output. In one method, the die is cleaned, and incidentally cooled, by spraying it with 10 per cent caustic soda solution after each extrusion, a rejection of a few inches from the leading end of the bar being made to avoid danger of later corrosion from the surplus reagent which may be carried through. Alternatively, an attempt is made to prevent the die from reaching the critical temperature by spraying it externally with water during extrusion. Both methods are claimed to permit several-fold increase in the rate of extrusion, though it is easy to foresee difficulties in applying them.‡

For any alloy it is a matter of trial to determine the actual conditions of speed and temperature which will give the best results. The form and size of section also enter into this : thus, for example, squares need to be extruded at a lower speed than round sections. Generally speaking, as high a temperature and speed as is possible

---

* Facing page 153.   † U.S. Pats. 2,047,237 and 2,135,193.

‡ Mr. Dix, Jr., in a private communication, states that some practical success has been obtained with the former of the above methods.

are to be preferred to low ones, since with the latter the tendency is increased for excessive grain growth to occur in the back end of bars, especially in stock which has subsequently to be reheated.

Ordinary commercial grades of aluminium extrude readily, requiring only low pressures, and having a long plastic range upwards from about 370° C.; the usual limits employed being from 450° to 500° C. A few of the softer alloys, such as the Al-Mn, Al-Si and Al-Mg-Si series, are also fairly simple, but many of the high-strength alloys are distinctly refractory, and strict attention has to be given to the extrusion conditions. Close control of temperature during soaking and extrusion is needed to conform with plastic properties which often persist only within a narrow band. Regulation of the extrusion rate, of little consequence with aluminium itself, for which it can be as high as 1 in. per second, becomes imperative for the harder alloys. For duralumin, for example, the rates, depending on other factors, are as low as 0·05–0·2 in. per second, giving egress speeds up to 10 ft. per minute.

Table 12 gives a short list of representative alloys belonging to the principal groups, and the extrusion conditions for a few of these are subjoined.

TABLE 12

Designation	Alloy Group	Composition						
		Cu	Si	Mg	Mn	Fe	Ni	Ti
Commercial aluminium (2.S.)	—	99·0 per cent minimum						
Aluman (3.S.)	Al-Mn	–	–	–	1·3	–	–	–
Anti-corodal (51.S.)	Al-Mg-Si	–	1·0	0·65	0·7	–	–	–
Birmabright (No. 214)	Al-Mg	–	–	3·5	0·5	–	–	–
Duralumin (17.S.)	Al-Cu-Mg	4·5	0·6	0·5	0·6	–	–	–
Hiduminium (RR56)	Complex	2·0	0·7	0·8	–	1·4	1·2	0·1
Y-alloy	”	4·0	0·7	1·5	–	0·6	2·0	–
25.S.	Al-Cu-Si	4·5	0·8	–	0·8	–	–	–
Super-duralumin	Al-Cu-Mg-Si	4·0	1·2	0·5	0·5	–	–	–
Hiduminium (RR77)	Al-Zn-Mg-Cu	2·0	–	2·7	0·5	–	Zn 5·0	–

	Billet Temperature for Extrusion, ° C.	Temperature of Container, ° C.	Approx. Egress Speed of Section, ft./min.
Anti-corodal	450–490	350–460	up to 50
RR56	440–475	350–420	5–20
RR77	410–415	380–400	1–3
Super-duralumin	425–455	380–400	3–8

The following data, given by Zeerleder[10], indicate the normal working conditions for different types, and afford a comparison of power requirements.

TABLE 13

Extrusion Temperature °C.	Aluminium 450°/500°	Al-Mg-Mn 450°/500°	Al-Mg-Si 450°/500°	Al-Cu-Mg 380°/460°	Al-Mg 380°/420°
Dimensions of sections (in.) which can be extruded from a container 15·5 in. dia. under pressure of 16 tons per square inch	$\frac{5}{16} \times 4$	2×4	$1\frac{1}{4} \times 4$	3×4	5×4
Pressure in tons per square inch required to extrude a section of $\frac{1}{8}$-in. wall thickness from billets 8 in. dia. 30 in. long	20–25	45–65	22–48	54–70	76–95

A determination made in the laboratory of the relative specific extrusion pressures of several alloys has already been shown graphically in Fig. 114.

Finishing Treatment. The greater number of extruded aluminium alloys which are intended for structural uses require to be heat-treated after they leave the press in order to develop the maximum properties of which they are capable. Briefly, this treatment of age- or precipitation-hardening involves in the first place a period of soaking at a high temperature somewhat below the solidus curve of the alloy concerned, to cause the entry into solid solution of the hardening compounds; this is followed by rapid cooling, usually by quenching in water, with the object of retaining these in a condition of supersaturation, and is completed finally by a precipitation stage which is brought about in some materials by a period of ageing at the ordinary temperature, but is induced in others as the result of heating at comparatively low temperatures. It is practicable to quench extruded lengths directly in water troughs as they come from the press, but the properties obtained in this way are not so high as those secured after the proper treatment.*

---

* Most of the alloys require a higher quenching temperature than is used for extrusion. RR77, for which the quenching temperature approximates that used in extruding the alloy, is an exception to this.

Some alloys are prone to harden considerably on air cooling after extrusion, and, in the case of tube shells or other sections which have to be cold drawn, it may be necessary to soften them first by annealing. Tube-reducing machines, giving reductions up to 85 per cent in one operation, are now being increasingly used for aluminium alloys.

The methods adopted in bringing sections, many of which are very intricate, into a serviceable condition have been described in some detail by Worsdale[11]. As extruded, the lengths are reasonably straight, but severe distortion and warping is found to take place on quenching after the solution treatment. The latter is carried out generally in salt baths fired by gas or oil, or in electrically heated furnaces provided with air-circulating fans. The cradle with its load is withdrawn mechanically from the furnace and immersed as quickly as possible in the quenching tank. After quenching the sections are treated to remove the distortion to which it has given rise. This is done first of all in hydraulic stretching machines in which a strictly limited amount of extension* is given to straighten the lengths without reducing them below the permitted dimensions, or unduly decreasing their ductility. Some channels and **I** beams, in which local warping is not always removed sufficiently by stretching and hand straightening to bring them within specification, are corrected by careful pressing at the points which require it. Worsdale points out that much improvement in avoiding distortion has been effected by the use for solution heating of vertical electric furnaces in which the extruded sections are suspended, being ultimately allowed to drop into deep water-tanks placed underneath, this method giving very good results with large and complex sections.

Magnesium Alloys. Technical difficulties in the removal of chloride inclusions from the manufactured metal delayed progress in the development and engineering uses of magnesium and its alloys in the period when a great advance was being made in the application of aluminium-base alloys. With the eventual solution of this problem the way became clear, and an impetus was given to the discovery and exploitation of new alloys, which, once again, has been reinforced by the requirements of the armament industries in the current period. The particular merits of magnesium alloys

---

* Usually limited to a permanent extrusion of not more than 1 per cent.

are similar to those which give aluminium alloys their chief value, and consist primarily in the advantages derived from the association of low specific gravity with satisfactory strength figures; the advantage being increased by the still lower density (approx. 1·8) of the former than the latter (about 2·8), despite the fact that the mechanical properties of magnesium alloys are below those of the strongest of the aluminium alloys. A particular attraction of magnesium alloys, however, lies in their extraordinarily good machining properties, in which respect they are superior even to screwing brass. There is perhaps no group of alloys to which extrusion is of more importance than it is to these, since the comparatively coarse-grained structure of the cast material causes most of them to be too susceptible to cracking to be worked by an alternative means until sufficient deformation has been imparted to refine the grain: except, therefore, for one or two soft alloys, it forms an invariable preliminary to other shaping processes.

No great amount of pure magnesium is extruded for it has somewhat poor properties, especially as regards its proof stress. The alloying elements of chief concern at present are aluminium and zinc; manganese is usually also present, since, though it has little effect on the strength, it has a valuable function in improving corrosion resistance. One important binary alloy, containing up

TABLE 14

Designation	Composition				Mechanical Properties as Extruded			
	Al	Zn	Mn	Ce	Proof Stress 0·2 per cent Tons/sq. in.	Ultimate Tensile Stress Tons/sq. in.	Elongation Per cent	H_B
Magnesium	–	–	–	-	—	12·0	8	35
A.M. 503, ASTM 11, D.T.D. 140A	–	–	2·0	–	11·5	19·0	5	43
A.M. 537	–	–	2·0	0·5	13·5	17·0	23	41
A.Z.M., ASTM 8, D.T.D. 259	6	1·0	0·2	–	15·1	20·0	16	56
A.Z. 855, ASTM 9, D.T.D. 88B	8	0·5	0·2	–	15·2	21·5	14	59
Magnuminium	11	1·5	1·0	–	16·0	20·0	14	60
Dowmetal X, ASTM 15	3	3·0	0·2	–	12·0	18·5	19	50

to 2·5 per cent manganese, is used extensively for the manufacture of rolled sheet. It is comparatively soft and easier to extrude than other alloys, and is also one of the few which are capable of being rolled directly without pre-extrusion.

The stiffness of the alloys towards extrusion is increased in proportion to the amount of the hardening elements which they contain, and the temperature employed is generally higher the greater the quantity of these. The temperature is also affected by the size of the sections, being higher for heavy reductions. The extreme range is from 320° to 420° C., but much narrower limits than these are generally used, being determined in accordance with the composition, dimensions, and the properties being sought. 350°–375° C. represent more usual working limits.

Pre-heating of the billets requires to be carried out uniformly to promote as far as possible a homogeneous structure by absorption of compounds, such as Mg_4Al_3, present in the alloys. Fox[12] points out, and this is also applicable to aluminium alloys, that the initial structure of the billet has an important bearing, and casting methods which lead to a fine grain are well worth adoption, since if it is coarse, larger particles of the compounds are present which are less readily dissolved, and tend to give rise to a solution gradient. In magnesium alloys this results in internal stress, since solution is accompanied by a small contraction, and it can also influence the evenness of response to heat treatment later.

From the aspect merely of the power required, strong alloys like A.Z.M. and A.Z. 855 are not difficult to extrude, and heavy reductions are possible, but they are subject to the same drawback as aluminium alloys in having to be extruded very slowly. This, indeed, applies to all the alloys, and to the metal itself, but rates become lower the greater the amount of alloying additions.* They range from 0·01 in. per second to 0·2 in. per second on the extrusion ram, the latter being attainable only for soft alloys and subject, of course, to the other factors. The relation of extrusion speed to properties can be appropriately left for consideration elsewhere.

It is known that work has gone forward in developing improved

---

* As an example of the extremity to which they may have to be taken, a German company in trials upon an alloy being examined before the war found it necessary to adopt a rate at which the extrusion of a single billet required four hours.

magnesium alloys which will also be capable of more rapid extrusion, but details of these are not likely to be revealed at the present time. The explanation of the low extrusion rates does not appear to lie outside the reasons put forward for other metals, though Altwicker[13] considers that the most significant cause is connected with the degree of recovery from crystal deformation, which is less complete when work is applied quickly, causing higher stresses and the exhaustion of the capacity for slip in the crystals. This is worthy of consideration, for the speed with which recrystallization takes place varies from one metal to another, and according to the temperature prevailing. It is also a fact that metals worked in what are considered to be their hot working range can frequently be made to show marked work hardening if they are quenched immediately following deformation, showing that temporary loss of plasticity can easily accompany rapid working.

Zinc-base Alloys. There has been a considerable increase in the extrusion of zinc alloys in Germany in recent years, where, arising out of the policy of seeking substitutes for copper alloys, a close study has been made of the fabricating qualities and mechanical properties of those based on high purity zinc, containing copper and aluminium as the alloying additions. Among the principal applications have been tubes for cold-water systems, inflator pump bodies, hand rails, and as fittings in the electrical industry, A summary of the results achieved has been given by Kästner[14], while problems connected with extrusion and the origin of faults in the latter have been discussed by Löhberg[15] and Wolf[16].

TABLE 15

Composition of Alloy			Properties in Extruded Condition		Extrusion Temperature ° C.
Al	Cu	Mg	U.T.S. Tons/sq. in	Elongation Per cent	
3·8/4·2	0·9/1·2	0·02/0·05	27	7	200
			25	10	320
9/11	1·8/2·0	0·02/0·05	34	4	200
			32	16	320
—	4·0	—	20	32	240

The best temperatures for extrusion vary with the composition. Alloys containing copper alone are found to extrude best at 200°–240° C., at which, though the pressure is very high, a greater speed can be used than in lower ranges. Those containing aluminium are best worked above this, at between 270° and 320° C., at which, as the table above shows, the properties are not inferior, while the ease of extrusion is improved by working above the transition temperature of the cubic β solid solution. These alloys provide one further example in which the speed of extrusion limits the rate of output, and this, combined with the necessity for small drafts in later drawing operations, goes a long way to offset the lower metal cost as compared with the brasses they are designed to replace. Kästner gives the following figures to compare one of them with other commonly extruded materials, in terms of their extrusion pressure and permissible speeds of working.

TABLE 16

Material	Extrusion Speed from Die (ft./min.) for Tubes as under (in.)			Extrusion Pressure (tons/sq. in.) for Tubes $1\frac{1}{2}'' \times \frac{1}{8}''$	
	$1 \times \frac{5}{64}$	$1\frac{1}{2} \times \frac{1}{8}$	$3\frac{1}{4} \times \frac{5}{32}$	Beginning	End
Brass (63 per cent)	500	250	250	29	38
Aluminium	300	250	250	19	19
Al-Mg-Si alloy	33	50	50	33	38
Zinc alloy with 4 per cent Cu	40*	16	16	48	24

* Refers to a pre-extruded billet.

It will be seen that the pressures for extrusion are considerably higher than for brass of the composition indicated: they are in general roughly the same as for duralumin.

Owing to the adverse effect which cold-working has on the properties of these zinc-base alloys, hot methods of deformation are much to be preferred. However, since in extrusion the limiting wall-thickness which can be made is about $\frac{1}{16}$ in., any further reduction must be obtained by drawing. In this connection it may be remarked that the effect on the properties produced by cold work is quite different from that which it has on most materials, and although the response of the different alloys is not identical, it may be said that, in general, in the initial stages of drawing, the tensile strength increases slightly, but this is followed, as more work is done, by a fall in strength, while the elongation values increase. If large reductions are attempted at each pass, therefore, there is danger of stretching or tearing the tube; moreover, as the number of passes increases the permissible reduction at each diminishes.

REFERENCES

[1] D. K. Crampton. The Extrusion of Metals. *Trans. A.S.M.*, 1937, **25**, 55–79.

[2] P. Bernhoeft. The Operation of a Directly-driven 1500-ton Press. *Z. für Metallkunde*, 1932, **24**, 210–13, 261–3.

[3] A. Wragg. The Extrusion of Non-Ferrous Metals. *Metal Industry (London)*, 1936, **48**, 73–7.

[4] H. Lepp. The Mechanical Properties of Some Tin Bronzes. *Tech. Pub. Internat. Tin Res. Dev. Council*, Series D, 1937 (3).

[5] H. W. Brownsdon. Discussion. *J. Inst. Metals*, 1939, **64**, 373.

[6] H. Lepp. Discussion. *J. Inst. Metals*, 1939, **64**, 364.

[7] A. B. Graham. Developments in Alloy Sections and Tubes for Marine Engineering. *J. Inst. Eng. & Shipbuilders of Scotland*, 1938–9, **82**, 188–224.

[8] G. Evans. Progress in the Manufacture of Seamless Tubes. *Iron and Steel Industry*, 1938, **11**, 169–71.

[9] C. A. Colombel. The Extrusion of Metals. *Rolling Mill Journ.*, 1931, **5**, 479–82.

[10] A. v. Zeerleder. Comparison of the Power Requirements in the Extrusion of Capsules of Pure Aluminium and Various Aluminium Alloys. *Aluminium*, 1937, **19** (10), 634.

[11] R. Worsdale. Modern Practice and Developments in the Extrusion of High-Strength Light Alloys. *Metallurgia*, 1940, **21**, 117–20.

[12] F. A. Fox. Magnesium Alloys. Physical Characteristics. *Metal Industry (London)*, 1941, **59**, 2–7.

[13] H. Altwicker. *Tech. of Magnesium and Its Alloys*, published by F. A. Hughes & Co., Ltd.

[14] H. Kästner. The Production of Zinc Alloy Tubes. *Metallwirtschaft*, 1939, **50/51**, 1010–15.

[15] K. Löhberg. The Properties of Extruded and Rolled Zinc Alloys. *Z. für Metallkunde*, 1939, **31**, 133–4, 279–83.

[16] W. Wolf. The Origin of Defects in the Fabrication of Extruded Zinc Alloys. *Z. für Metallkunde*, 1939, **31**, 64–75.

CHAPTER VIII

THE PROPERTIES OF EXTRUDED METALS

In the main, extruded metals enjoy a high reputation both in regard to their standard of quality and for their good physical properties: the latter, indeed, are commonly superior to those obtained in other wrought forms. All the same, it has to be acknowledged that they are not always entirely homogeneous, being subject, just as are metals fashioned in other ways, to a number of aberrations which are liable to impinge to some extent on certain of their applications. It is important to avoid exaggerating these unduly, and to get them in their right perspective by seeing in what they consist and how they come about. In any examination of the consistency and uniformity of quality and properties there are two main aspects to consider. The first concerns the presence of definite flaws and defects arising from the inclusion of impurities, gas, oxide, etc., which takes place either during the casting of the billets or, as has been seen may occur, as the outcome of the mode of deformation of the metal during extrusion. The second arises from the manner in which the properties are affected according to the amount of the deformation, its distribution over the length and cross-section of the extruded part, the temperature at which the working is carried out, and so forth.

Extrusion billets are mainly prepared by casting in plain or trunnion-mounted moulds. Water-cooled moulds are in growing favour for some materials on account of the improved surface which is obtained, with freedom from mould troubles such as blowing, and also on account of the finer grain of the ingots. Following the active development work in continuous casting methods, especially in Germany and the U.S.A., the preparation of extrusion billets in this way looks like becoming increasingly important in the future.

Without entering upon a discussion of melting and casting practice, concerning which there is nowadays no lack of authoritative information, reference can be made to some of the chief sources of extrusion faults traceable to the billets. Enough has been said about flow during extrusion to show the importance of the surface condition of the billet; it must be as clean, smooth, and regular as possible. Casting procedure must therefore be adapted to this end to avoid wrinkling or roughness of the skin, splashes and laps, and the entraining of oxide membranes. Subcutaneous gas cavities, due to blowing, or from the mould dressing, are most undesirable. Gas is also an important form of unsoundness in the ingots generally, and has, of course, several sources beyond those just mentioned. Much depends on the melting conditions with the opportunity which is given for the absorption of gas, especially hydrogen, from the furnace atmosphere or the fluxes. Gas is also formed in some instances by reaction between dissolved oxide and the mould dressings, and between oxides and gases dissolved in the molten metal. In addition, air may be entrained during pouring. To all of these must be adjoined the possibility of the retention of gas originally in the metal. From whichever of these potential causes they arise, gas inclusions can be troublesome in extruded material, particularly when they are situated near to the surface, for then they are liable to open out as blisters. These sometimes appear immediately on extrusion, or do so often when material is reheated, as, for instance, during the heat-treatment of aluminium alloys.

Other forms of unsoundness are associated with shrinkage, arising out of unsuitable pouring conditions or as the result of failure to obtain satisfactory feeding. A discard is made from the casting head, and sometimes too a rejection is made from the bottom of the ingot in the interests of soundness. It is often convenient to cast long ingots which are sawn into billets of the required length.* This gives a proportionate reduction in the amount of scrap, but their production requires care in regulating the teeming to secure that freezing occurs from the bottom, so that these long castings of relatively small diameter are free from axial porosity.

Inhomogeneity, due to inverse segregation, occurs to a serious extent in extrusion billets of some alloys, as, for example, in duralumin. It has a special significance in regard to the satisfactory extrusion of tin bronzes.

The presence of inclusions of dross, and oxide, is mainly connected with the melting and pouring conditions. Protection from oxidation during pouring can be obtained in the case of metals

---

* This applies mainly to copper alloys and is less suitable for high-strength light alloys owing to segregation difficulties.

Section of the Extruded Rod at

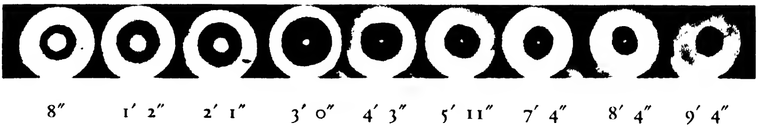

Section through billet.

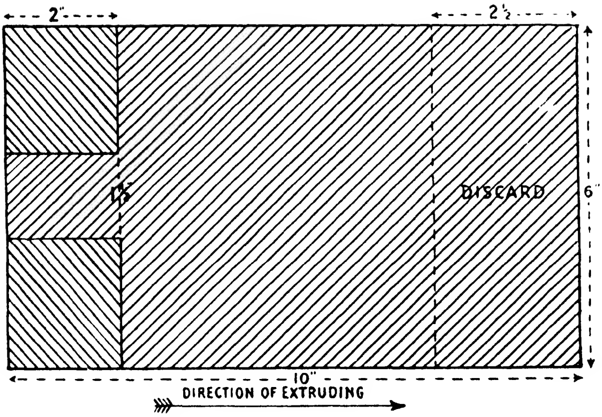

Flow of metals during extrusion of composite billet.

Fig. 120.

[*Facing page* 167.

such as brass, bronze, and deoxidized copper by the use of oily dressings on the moulds which give off volatile hydrocarbons. Aluminium alloys on the other hand, and copper alloys containing aluminium, which form tough, irreducible oxide skins that are liable to become entangled in the metal, are difficult to cast satisfactorily by ordinary methods. To deal with these without turbulence and churning special casting processes are used. These include the well-known Durville method, and others such as that in which the metal is slowly poured into an almost horizontal mould which is gradually turned up into the vertical position. In another the book type of mould, with a false side which is built up as filling proceeds, thus allowing metal to be run in quietly with absence of splashing from a spout at low level, is used.

Opinion is divided as to whether it is better to insert the billet into the container with its upper end next to the die, or vice versa. From the point of view of possible unsoundness at the cast head, which may not be entirely eliminated by cropping, there is something to be said for the former because defective material then passes at once into the front end of the bar and is confined to a short length, whereas, as consideration of the flow has shown, the same material situated at the rear central part of the billet travels forward rapidly and enters the die at an early stage, continuing present in a drawn-out form over the greater part of the length of the bar. This is rather well exemplified by an experiment made by Newson[1] with composite brass billets. Two of these, of different composition but similar extrusion properties, had discs parted off one end and bored out centrally. These were then fitted on to a spigot machined on each billet, the disc of one brass going on to the opposite billet in each case, as shown in Fig. 120. The two brasses could be differentiated by etching sections taken after extrusion. In bars 13 ft. 6 in. in length extruded from these, the discs, placed next the pressure disc, were found to constitute part of the bar only 4 ft. from the front end, and extended over the rest of the length. Zeerleder[2], on the other hand, firmly favours extruding with the head of the billet to the rear with aluminium alloys which show inverse segregation.

Those extrusion defects which have their origin in the flow sequence have already been mentioned in Chapter V, and will not be referred to again here.

The Dependence of the Properties on the Degree of Deformation. The fact is familiar that the properties of most metals can be improved by working, and that while the extent of the improvement bears a relation to the amount of the deformation undergone, some metals require more than others to produce the maximum effect. For pure metals and uniform solid solutions possessed of high malleability in the cast state, the benefit produced is not very great and is fully realized without need for very extensive working: it is due mainly to the elimination of the ingot structure by the breaking up of columnar and other unfavourable crystal arrangements which give a predisposition towards weakness in particular planes and directions. Metals which do not belong to the cubic system, like magnesium and zinc, are affected much more by working and show some peculiar effects due to their crystallographic anisotropy. The case of bismuth is interesting: extremely brittle in the cast state, breaking readily to expose large cleavage faces, it can nevertheless be extruded without difficulty at 40° C. or above, and is then found to have acquired a high measure of pliability. In alloys of more complex structure changes other than that of mere grain refinement are required to bring them into a fully wrought condition. The high-strength aluminium and magnesium alloys, for example, contain appreciable amounts of hard compounds in eutectic colonies or as groups of coarse particles rather unevenly distributed through the matrix of the alloy. Many of these are brittle and do not deform much during extrusion but are broken down into smaller fragments. The reduction required to do this and to distribute them uniformly in order to obtain the highest benefit from working, is high and seems to increase roughly with the amount of the hard phases and with the evenness of their occurrence in the first place. Sachs considers that for duralumin the reduction in cross-sectional area from the billet to the bar should preferably be not less than 85 per cent. Sections ought therefore to be extruded from a container large enough to allow an extrusion ratio of 7 at least.

Table 17 shows the variation in properties with increasing reduction in the case of a high-tensile brass containing Cu 59·0 per cent, Sn 1·0 per cent, Pb 0·65 per cent, Fe 0·85 per cent, Al 1·3 per cent, Mn 1·0 per cent. The figures refer to test-pieces taken axially from the extruded bars at corresponding positions.

TABLE 17

Reduction by Extrusion Per cent	Extrusion Ratio	Yield Point Tons/sq. in.	Ultimate Tensile Stress Tons/sq. in.	Elongation Per cent
75	4	17	35	30
86	7	18	36	30
94	16	19	37	27
97	36	22	40	25

The fact that deformation is greater in the outer zones of a bar than it is at the centre may result in differences between the properties at these places. The variation is greatest when the extrusion ratio is low, for then the centre receives only light deformation: in smaller sections, involving heavier reductions, both central and outer regions are sufficiently, even though not equally, worked to bring them into a fully wrought condition and the properties become more uniform.

The importance of doing enough work on the metal, and the effect of not doing so, is well illustrated by the figures in Fig. 121, relating to Schmidt's work on the alloy Electron VIw, quoted by Fiedler [3]. These allow it to be seen that, given a certain minimum degree of reduction, there should be no great disparity in properties. Cook and Duddridge [4] have explored the hardness across the sections of several sizes of rod, representing different reductions in 60/40, free-cutting, and a high-tensile brass, finding only small variations to exist. The highest hardness, just below the surface of the bars, was only 2–6 per cent above that in the middle. Some of their results are reproduced in Fig. 122, being included for their interest in showing the effect of reeling and drawing on the hardness distribution in extruded bars. No appreciable change in diameter resulted from reeling. The curves for the drawn condition represent successive drafts of 3·7, 5·7, and 5·9 per cent. In further tests, on rods of a manganese bronze for which the extrusion ratio had been 31, the ultimate tensile strength of the outer layers was 35·5 tons per square inch, compared with 32·6 tons per square inch at the centre.

Changes in Properties along the Extruded Length. From end to end of extruded lengths there are usually to be found

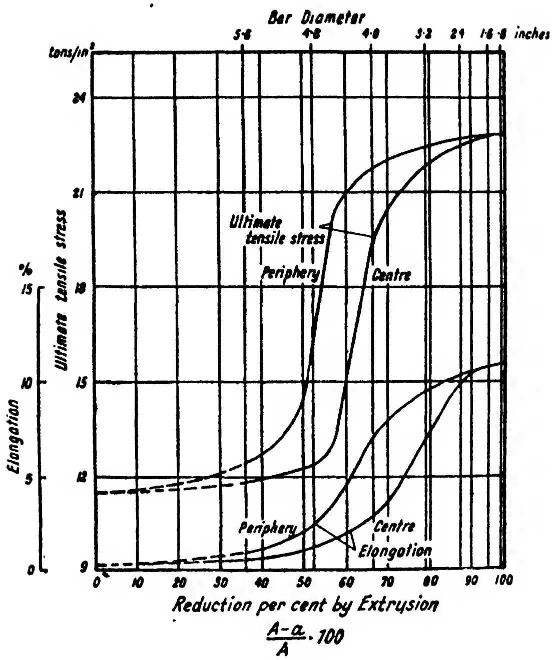

FIG. 121.—The tensile strength and elongation of extruded Elektron (*VIw*) in relation to the percentage of extrusion. Starting from 7 inches diameter cast billet.

(*Courtesy of F. A. Hughes Ltd.*)

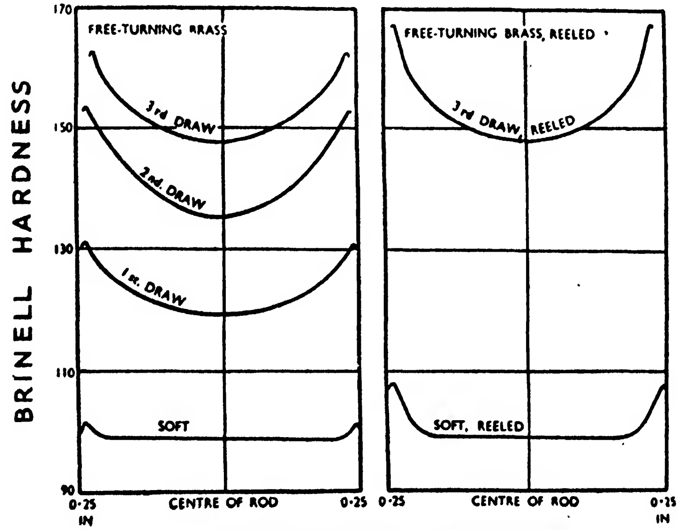

Hardness Variation in ½-In. Diameter Rods.

FIG. 122.

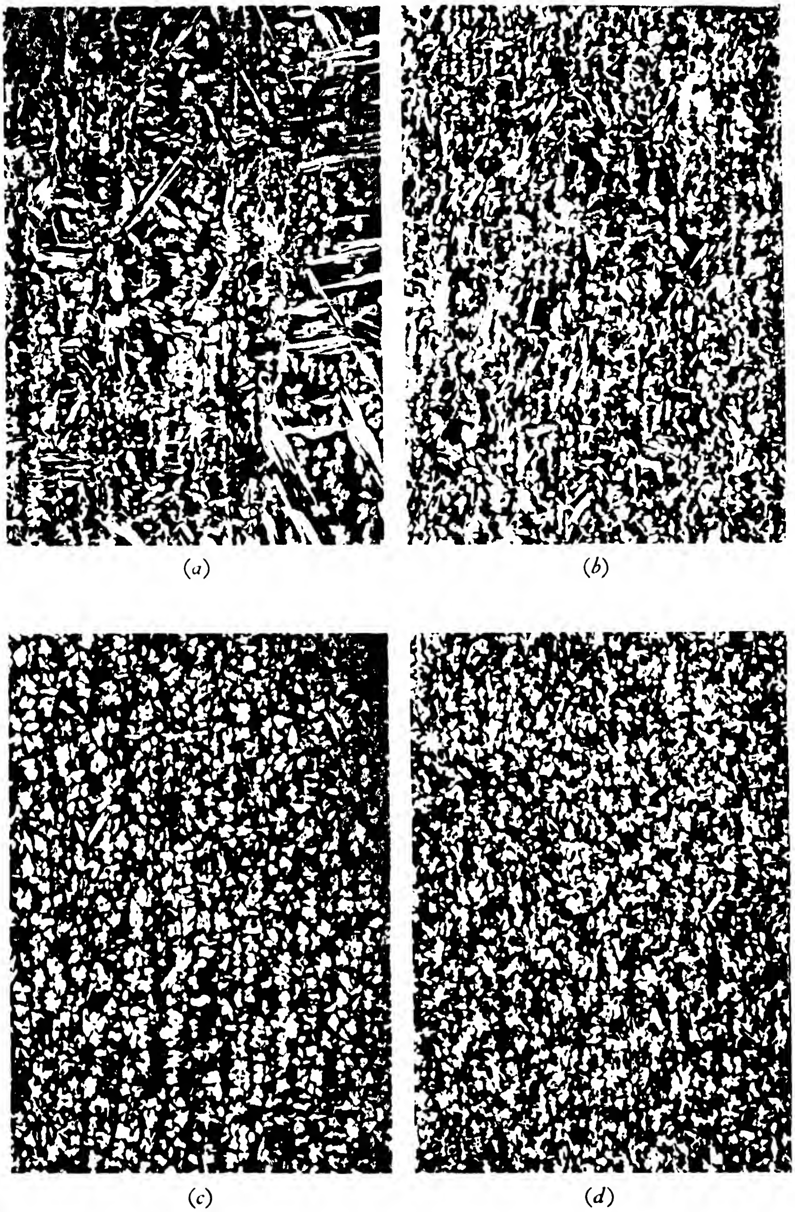

(*a*) (*b*)

(*c*) (*d*)

Fig. 123.—Micro-structures at different positions along 2¼-in. extruded bar (92 per cent reduction by extrusion) of brass with 58 per cent Cu, 2 per cent Pb.

(*a*) Front end, centre of bar. (*c*) Back end, centre of bar.
(*b*) Front end, outside of bar. (*d*) Back end, outside of bar.

All at 50 diameters.

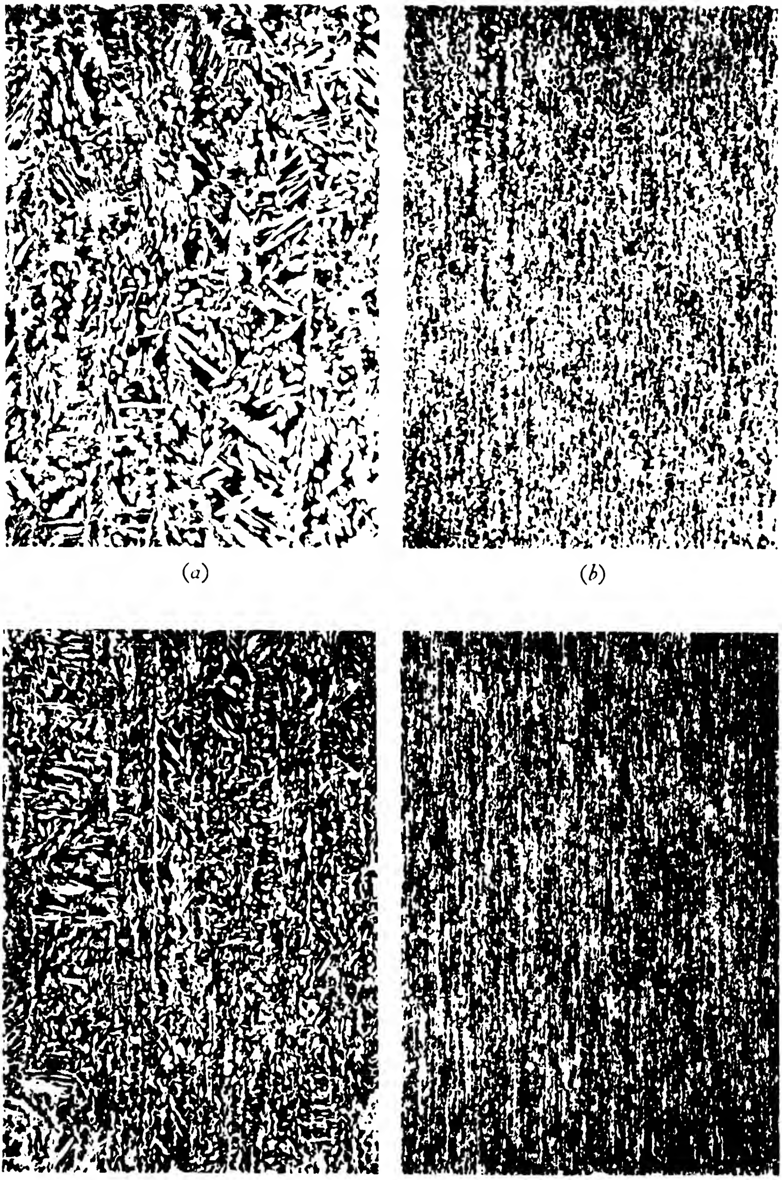

(*a*) (*b*)

(*c*) (*d*)

Fig. 124.—Micro-structures at different positions of brass bars (58 per cent Cu, 2 per cent Pb).

(*a*) 1·6 in. diam. (96 per cent reduction), front end.
(*b*) ,, ,, ,, ,, back end.
(*c*) 0·5 in. diam. (99·6 per cent reduction), front end.
(*d*) ,, ,, ,, ,, back end.

All at 50 diameters.

progressive changes in structure and in the associated mechanical properties. While this is the case with most materials, it is more pronounced in those having a heterogeneous structure. The figures in the following table refer to test-pieces taken axially from the first and final thirds of extruded brass bar containing Cu 58 per cent, Pb 2 per cent.

The photomicrographs in Figs. 123 and 124 indicate the front and back end structures typically found in bars of different sizes in such material.

TABLE 18

	Proof Stress (0·1 per cent) Tons/sq. in.	Ultimate Tensile Stress Tons/sq. in.	Elongation Per cent	H_B
Front end . . .	12·8	27·9	40	88
Back end . . .	14·6	29·2	32	96

From an examination of duralumin, in which were included tests made on pieces cut eccentrically so as to include the highly worked peripheral zones seen in Fig. 125, as well as those taken axially from the middle of the bars, Walbert [5] obtained the results below, from which it will be observed that the lateral differences are slight in comparison with the longitudinal.

TABLE 19

Position of Test-piece	Elastic Limit Tons/sq. in.	Ultimate Stress Tons/sq. in.	Elongation Per cent
Front end	19·0	29·1	15·2
Middle of Length . . .	19·6	30·6	14·1
Back end:			
(*a*) fine grained outer zone .	21·0	32·7	17·6
(*b*) centre of bar . . .	21·5	32·1	13·5

Several factors contribute in causing these variations. In part they are attributable to the varying deformation sustained in different parts along the length which, as shown above, can exercise a considerable effect. In this respect it would be expected by reason of the flow distribution that material extruded by the inverted method would be more uniform in its properties than that from the direct process, and this is generally conceded to be the case. However, it is the latter process which is of greatest practical concern. In this, as already shown, after the immediate leading end which, having received only slight working, is coarse in structure and poor in properties, there follows over 60–70 per cent of the length metal that has received fairly uniform deformation in a longitudinal sense. Finally, as the back end is approached the metal has been subject to increasingly complex flow in the course of which it undergoes very severe working.

In the case, especially, of copper alloys and others requiring a high initial billet temperature there is superimposed on this variable working a progressive fall in the temperature at which the actual extrusion through the die occurs. The extent of this fall naturally depends on several factors, such as the actual temperature, the speed of extrusion, etc., and the range covered is generally greater when small sections are being made. It will be appreciated that the effects produced over the extruded length from this cause will be somewhat similar to those which would be brought about in hot rolled material from the use of different finishing temperatures, and will lead, if the temperature is high, to an overheated structure, or, if low enough, will give rise to some work-hardening. An example of the extent to which the properties are influenced by the extrusion temperature alone is given, for the case of a simple metal, in Fig. 128.

The structural variations encountered in brasses of the type referred to above are broadly as follows: starting with a high extrusion temperature, the front end tends to consist of large equi-axed β grains containing acicular masses of the α constituent. The corresponding tensile properties are rather low, improving, however, as the grain-size diminishes. Behind this in the bar, or replacing it if the billet temperature to begin with was rather lower, the β grains possess an elongated character with the α phase preserving the Widmannstätten arrangement within these at first but changing gradually to assume a banded form lying parallel to the rod axis. This change is accompanied, both as regards tensile strength and elongation, by an improvement in properties. As the back end of the bar is approached, the directional character becomes more marked, especially in bars of small diameter. Finally, the tendency arises for the elongated α particles to change into chains of more or less rounded pieces, and this coincides, owing to the resulting continuity of the β phase, in a sharp rise in strength and fall in the elongation value.

Structural heterogeneity of this kind is often of importance in relation to the further processing of extruded material, particularly where this involves reheating. Two instances of this may be given. Several investigations[6, 7, 8] have been made covering the structures found in extruded brass bars used for forging stock, with about 58 per cent of copper and 2 per cent of lead. For this material, extruded at 725° C. at approximately 0·5 in. per second, Hinzmann, for example, found that the first third of a bar consisted of equi-axed β grains with long acicular pieces of the α constituent in a Widmannstätten arrangement. The temperature had been high enough to maintain an entirely β structure during its extrusion, and separation of the α phase had only taken place after the metal had passed through the die. About halfway along the bar the β grains had an elongated character and the α occurred partly in a rounded form as a result of having begun to separate before and during extrusion. The last 30 per cent or so of the bar, formed at a lower temperature, possessed a strongly marked fibre structure, consisting of a background of elongated β crystals embodying rounded masses of α linearly arranged. These changes took place first in the outer parts of the bar. When a bar with these features is cut into blanks, which are then reheated for forging, those from the first two-thirds of the bar behave satisfactorily, but those from the back end are unstable, showing pronounced grain growth which leads them to crack or split when they are pressed. The most effective remedy for this, by ensuring that the deformation is carried out at a temperature which will give the stable structure throughout, is to extrude at a higher speed of 2–4 in. per second, so that the extent of the cooling is reduced.

There is a general similarity between the above and the case of extruded duralumin reheated for forging or heat treatment. Here the rod, at first, has both its core and more-worked exterior consisting of long, spindly crystals. Continuing along the length, the highly worked outer zone increases in width until, at the back end, it extends well towards the middle; at the same time it becomes extremely fine-grained, as seen in Fig. 125, for a two-hole die. Often the fine-grained zones contain concentric rings of larger crystals which form in the extremely heavily worked metal coming in from the sides of the billet, where their origin can frequently be seen in sections of billet residues; in other cases they appear close to the die surface where the metal, already subjected to severe deformation, is further worked at the entrance to the die, where high local temperatures also tend to occur. Zones of this kind are shown in the section of bar in Fig. 126. On reheating, excessively large grains are liable to develop in the fine-grained areas at the back end of the bars, and this is the more marked the lower the rate at which they are heated. It is generally observed that liability to this gross crystallization extends over a greater length from the back end and further into the bar the lower the temperature at which extrusion is carried out.

The above phenomena appear to be related to other instances in which abnormally large grains are produced in worked metals. The best-known cases are those brought about in many metals when slight cold-working at the ordinary temperature is followed by annealing in an appropriate range: a critical degree of strain hardening is necessary, for which the deformation required is usually quite small, and larger deformations result in a much finer grain-size. Now the deformation in extrusion is, on the contrary, extremely heavy, and moreover is performed in the hot-working range in which strain hardening is absent. Thus the conditions are quite dissimilar. If, however, the temperature of extrusion is low, or falls to a low value during the operation, there is a possibility that some of the metal becomes cold-worked to some extent. It is perhaps significant, in this connection, that the *degree* of strain hardening as the result of cold-work depends on the temperature at which the work is applied and is less the nearer the approach to the true hot-working range. Thus it may well occur, in extrusion, that the degree of strain hardening requisite to the development of very large crystal grains is only attained in regions of very heavy deformation. The fact that temperature and deformation gradients exist in extrusion will favour the critical concurrence of these two factors, and it would seem possible to have, in different parts, (*a*) zones in which conditions favoured recrystallization with the development of fine-grained structure, (*b*) places at which the deformation and temperature coincided to cause abnormal grain growth, and

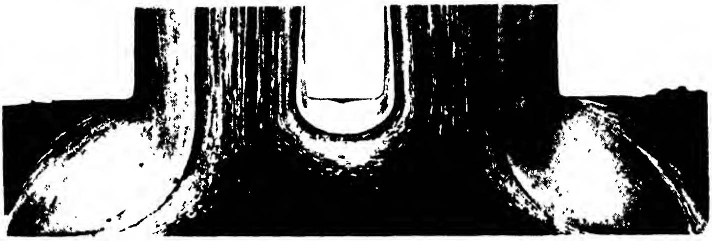

FIG. 125.—Etched residue of duralumin billet extruded through a two-hole die.

FIG. 126.

FIG. 126.—Transverse section of extruded bar showing annulus of coarse crystals at the surface.

(*c*) other zones where the work was insufficient or the temperature too low for recrystallization of the elongated grains, though later, if these were heated, they might become the seat of grain growth.

Transverse Properties. Extrusion readily gives rise to directional properties due to the formation of a fibre structure in the direction of working. This may originate in several ways, as by the stringing out of inclusions or particles of hard constituents, by the linear distortion of cored dendrites to give a banded structure, and by the development of preferred orientations in the crystals. The properties in various directions relative to the axis for a manganese bronze rod, the extrusion ratio for which was 7·8, and of composition Cu 57·6 per cent, Sn 0·98 per cent, Mn 1·14 per cent, Fe 0·60 per cent, Pb 0·46 per cent, Zn rem., have been reported by Cook and Duddridge as follows:

TABLE 20

Position of Test-piece	U.T.S. Tons/sq. in.	Elongation Per cent	Izod Impact Ft.-lb.
Longitudinal	31·5	41	28
45° to axis	30·3	29	26
Transverse	28·5	20	22

The transverse strength is almost invariably lower than in the longitudinal direction, the difference being most pronounced with heterogeneous materials which show a well-marked fibre. This has no great significance in the majority of applications since the applied stresses in service are generally such as to make the longitudinal properties of most importance.

A very low transverse strength is sometimes found in the back ends of extrusions in the strong aluminium alloys containing high alloying additions. Sachs associates this with the occurrence of minute longitudinal cracks, and puts out the suggestion that the intense shearing deformation in certain zones, combined with the presence in the flowing metal of stringers of particles of hard compounds, can cause loss of cohesion and the development of fissures. The transverse strength is most affected when the extrusion is done at a low temperature.

Extrusion Temperature. A remarkable instance of the influence of the extrusion temperature is found in its effect on the properties of certain aluminium alloys. It is frequently observed that extruded rods and other sections in high-strength alloys are considerably harder and stronger than the same materials in the rolled or forged condition. As pointed out by Sachs in regard to duralumin, the proof stress, tensile strength and hardness are often 20–50 per cent above the normal values. These higher properties persist after annealing or hardening treatment but come down to normal if heat treatment is preceded by cold drawing by about 15 per cent. This enhancing of the strength is most marked in material extruded at a temperature approaching the upper practical limit, though it is then accompanied by low elongation. Even so, by using a high extrusion temperature and maintaining it uniform, the alloy can be regularly produced with a tensile strength 10–15 per cent above the normal specification. Low extrusion temperatures give lower and less regular properties. The effect is not an isolated one, and is strongly shown by other alloys. For example,

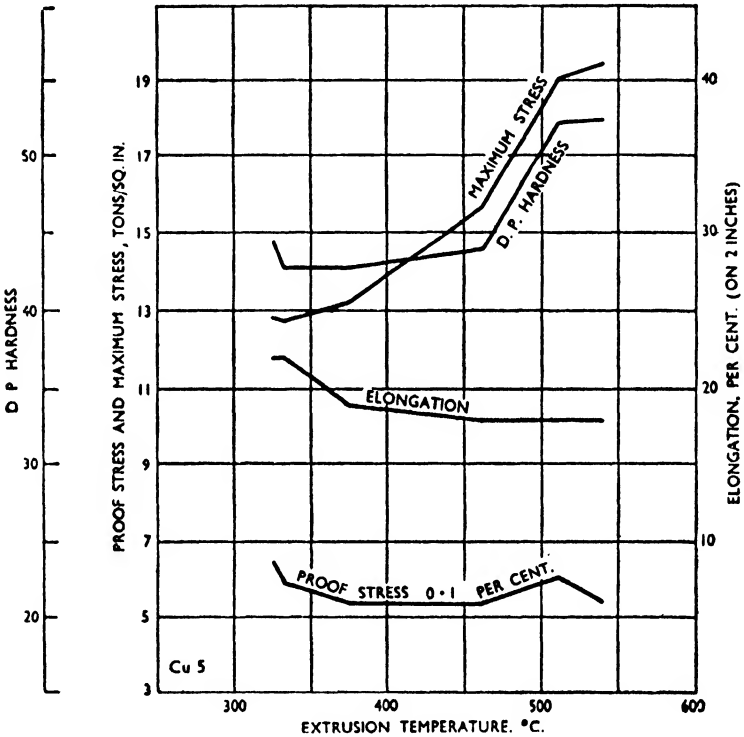

FIG. 127.—The mechanical properties of 5 per cent copper-aluminium alloy extruded at different temperatures.

Fig. 127 shows, for a 5 per cent copper-aluminium alloy, the result of tests on bars extruded at different temperatures. Compared with Fig. 128, for aluminium in which the hardness and strength are lower the higher the working temperature, the results for the former are in the opposite direction.

Owing to the fact that it crystallizes in the hexagonal system, magnesium and its alloys acquire preferred orientation in crystal structure as the result of working to a greater extent than do the cubic metals. In extruded bars the grains are oriented so that the base of the hexagonal prism in each case lies approximately in the direction of extrusion, the main axes of the crystals having random orientation. This occasions a difference between the values of the proof stress in compression and tension, the former being only half to two-thirds the latter. This is a serious disadvantage for many technical purposes, and attempts have been made to remedy it.* Schmidt[9] puts the low compressive yield-point down to

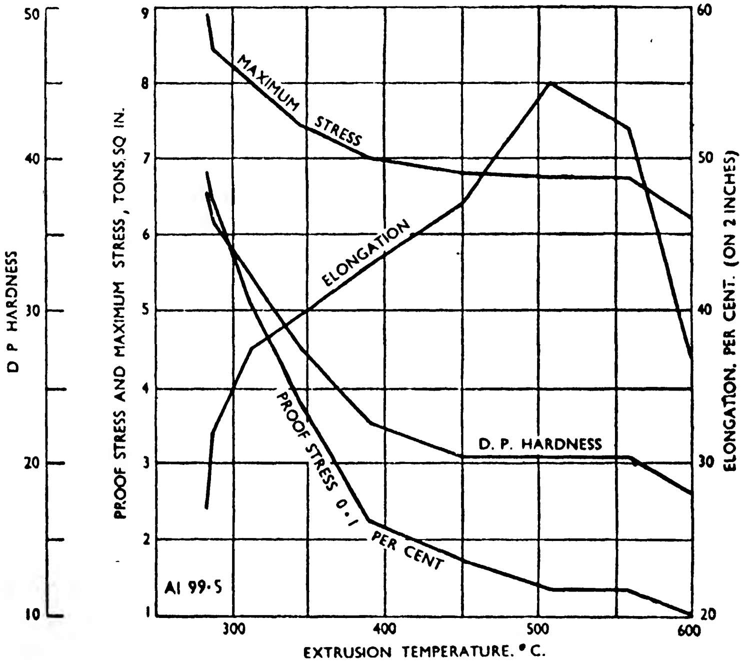

FIG. 128.—The mechanical properties of aluminium extruded at different temperatures.

---

* Brit. Pat. 337,706.

twin formation, which does not occur under tensional stress, and has shown that if it can be arranged to produce a fine-grained structure, in which twinning is much more difficult, a marked improvement can be obtained. This can be done either by extruding at a speed much below the maximum possible, and using a low temperature, or by extruding at a normal temperature and full permissible speed and quenching the metal immediately it leaves the die to suppress the growth of the grains. The figures in Table 21 show the effect of these methods.

TABLE 21

Extrusion Temperature ° C.	Proof Stress Tons/sq. in.	Speed of Extrusion, in. per second on ram		
		0·08	0·25–0·3	0·6
250	in tension	15·5	15·2	15·2
	in compression	14·0	11·4	10·8
350	in tension .	14·6	14·6	—
	in compression	8·3	7·9	—
350 followed by quenching	in tension	—	15·5	—
	in compression	—	14·9	—

REFERENCES

[1] J. E. Newson. Discussion. *J. Inst. Metals*, 1931, **45**, 378.

[2] A. v. Zeerleder. *Tech. des Aluminiums*, 265.

[3] R. Fiedler. *Tech. of Magnesium and Its Alloys*, 370.

[4] M. Cook and G. K. Duddridge. The Effect of Drawing on the Hardness and Tensile Strength of Brass Rod. *J. Inst. Metals*, 1939, **64**, 311–29.

[5] H. Walbert. The Process of Flow in Light Alloys Extruded through Single and Multiple Dies. *Aluminium*, 1938, **6**, 379–85.

[6] R. Hinzmann. The Heat Treatment and Structure of ($\alpha + \beta$) Brass. *Z. für Metallkunde*, 1927, **19**, 297–303; 1933, **25**, 67–70.

[7] W. Köster. The Technological Behaviour of Drawn Brass Rods. *Z. Anorg. Chem.*, 1926, **154**, 197–208.

[8] G. Sachs and W. Eisbein. The Power Consumption and Mechanism of Flow in Extrusion Presses. *Mitt. Material*, S. **16**, 1931, 67–96.

[9] W. Schmidt. Crystal Structure and the Working of Metals, with Special Reference to Elektron. *Z. für Metallkunde*, 1933, **25**, 229–36.

CHAPTER IX

THE IMPACT METHODS OF EXTRUSION

The Manufacture of Collapsible Tubes. The production of collapsible metal tubes has its origin in a patent taken in 1841 by John Rand for the making of " vessels so constructed as to collapse under slight pressure and thus force out the fluid contained therein through proper openings for that purpose ". A simple form of screw-down press (Fig. 129) was used to begin with, and the method was applied to make lead tubes to contain artist's colours. Tubes made of tin were introduced some years later. According to Askew, the method was in operation in France in 1855, where Richard exhibited tubes at the Paris Exhibition in that year. It does not appear to have been actively taken up in America until about 1870, being introduced there by Wirtz from Austria. The industry has developed an ever-widening field of usefulness in the packing of such toilet preparations as tooth paste, shaving cream, cosmetics, etc.; and a diversity of other commodities like adhesives and cements, mustard, shoe polish, and so forth. The estimated production of collapsible tubes at the present time has reached 4 million gross a year, consuming 15,000 tons of metal.

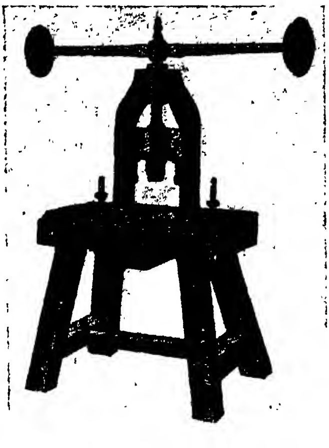

FIG. 129.—The first tube-making press used in 1841 by John Rand, inventor of collapsible tubes.

(*Courtesy of International Tin Research and Development Council.*)

Essentially the process consists in placing an unheated slug of metal, of thickness suitable for the length and wall thickness of the required tube, in a shallow die and subjecting it to a percussive blow by a punch or former to cause the metal to flow up over the punch through the annular orifice between it and the sides of the die. Normally the punch is undercut above a narrow shoulder so that the tubes fit loosely upon it and can be readily stripped off.

Conical punches, which aid centring in the die and thus in giving concentric tubes, are preferable to those with flat ends. Meticulous polishing of the working surfaces of the tools over which the metal flows is required. A diagram of the arrangement is shown in Fig. 130. The base of the die in which the projecting nozzle of the tube is formed may be threaded so as to form an external thread on the nozzle ready to receive the screw-cap. In this case the die is either made in halves to open in removing the tube, an arrangement which lacks robustness in meeting the heavy stresses entailed in the process, or that part of the die containing the thread may be made to revolve to unscrew the tube. Generally, however, the nozzle is threaded in a subsequent operation. The die, which takes the form of an insert in a heavy steel holder, and the punch, are of fully hardened tool steel and have an average life of 300,000–400,000 tubes. Excellent service has been obtained in some instances by the use of cemented carbide tools, though particular care is needed with this material, owing to its rigidity, in ensuring that the die ring is fitted with extreme accuracy into the holder.

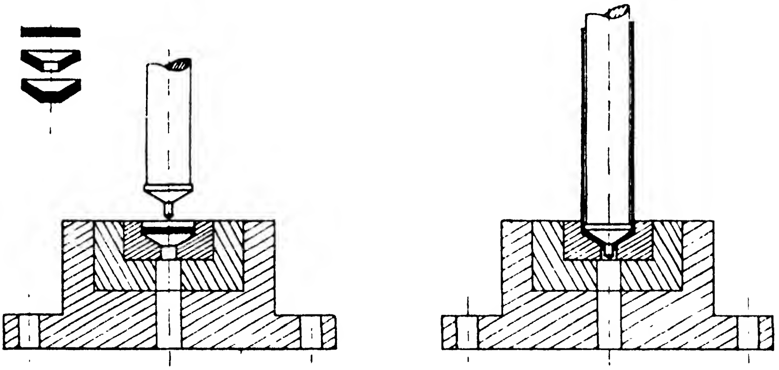

FIG. 130.—Formation of collapsible tubes by impact extrusion.

According to the purpose to which they are to be put, collapsible tubes are made of tin, lead or tin-lined lead, and also of aluminium. In normal times about 50 per cent of the total production consists of tin; lead and tin-lined lead account for a further 40 per cent, the remainder consisting principally of aluminium. In the U.S.A. the Federal Food Laws disallow the employment of lead containers for food products, tooth paste, etc., and the use of tin tubes preponderates; in Europe, on the other hand, the cheaper tin-coated tube is very commonly resorted to. The tin used is not, as a rule, in the pure form, but is alloyed with 0·4–0·5 per cent of copper to increase the stiffness of the tubes; for the same reason lead tubes generally contain 0·6 per cent of antimony. Where, owing to the nature of the contents, corrosive action may be anticipated, it is by no means infrequent for the tubes to be sprayed internally with lacquer, or flushed out with hot wax. Alternatively, since corrosion is especially liable to occur at the nozzle where there is exposure to the atmosphere, a method has been evolved in which a pure tin nozzle is welded on in a later operation.

In the preparation of blanks for extrusion, the metal after melting and alloying in gas or electric furnaces, is cast in vertical or open chill moulds into the form of slabs ½–1 in. thick, which are rolled out into sheets of the required gauge. These are fed into automatic blanking machines which cut out a number of circular discs at each stroke which are then rumbled in batches to detach adherent rags of metal. At this stage a measured quantity of lubricant is added to each batch. The question of lubrication is one of special importance in promoting even flow of the metal over the punch. Of the materials used for this may be instanced mixtures of powdered paraffin wax and olive oil, or one of white vaseline with starch.

For the tin-coated tubes the blanks are cut from sandwich plates prepared by rolling a sheet of lead between two thin tin sheets, the relative thicknesses of the tin coating on each surface of the blanks being of the order of 2½ per cent. In another method a sandwich ribbon, from which blanks are cut, is prepared by the extrusion of a composite billet of lead and tin from a small hydraulic press. In the blanking of tin-coated material it is desirable to contrive that the tin is drawn over the sheared edges of the blank, otherwise difficulty is met in securing a continuous coating over the tube. The making of extrusion blanks by die-casting has attracted attention, but, except in the case of zinc, has not proved yet to be economically feasible.

Mechanical presses of the crank, eccentric or toggle types are used to carry out the extrusion. Modern practice calls for machines of rugged construction in order to give the rigidity needed to meet the precision required of the product. An illustration of one of these is given in Fig. 131. In some designs the stroke of the press is more than double the maximum length of tube produced to allow the latter to be stripped off the punch, but more usually a very short stroke is made and the punch, on withdrawal from the die, is tilted forward for stripping either by hand or by means of compressed air directed through the punch. A type of press has been introduced embodying a modified motion in which the punch comes almost to rest touching the blank and then accelerates to perform the extrusion, thus regulating the speed of the working stroke and easing the flow, whilst avoiding the shock of impact. It has still to be proved whether the advantages claimed for this modification in working are sufficiently real to warrant the additional cost involved in construction.

While blanks may be fed into the machine by hand, in the latest methods this is done through coin or hopper feeds, and by employing these in conjunction with air stripping and a conveyor system, the operation of the presses can be rendered entirely automatic. Semi-automatic presses operate at speeds of 20–30 strokes per minute, and those which are fully automatic at about 60 S.P.M., giving an output of 200 gross per day.

After extrusion, the nozzles of the tubes are pierced, and screw threaded, and the open ends are trimmed to length by removing the flash; these operations being done in small high-speed lathes. They are then ready to receive a base coat of cellulose paint, after which they pass by conveyor through thermostatically regulated drying ovens and thence to a two or more colour printing machine where they receive a design appropriate to their intended purpose. They finally travel through a drying oven, and, after undergoing inspection, proceed to the packing stage.

At the present time, collapsible tubes can be made in sizes up to a maximum of 3 in. in diameter and 12 in. in length, with wall thicknesses varying according to the other dimensions from 0·005 in. to 0·010 in. Larger tubes than these could doubtless be made by the use of more powerful presses.

Although the impact extrusion of collapsible tubes is often referred to as cold extrusion, it is scarcely to be regarded, so far as tin and lead are concerned, as a cold-working operation. Even at temperatures around 15° C. work-hardening in these metals is only transitory, and, moreover, in practice the

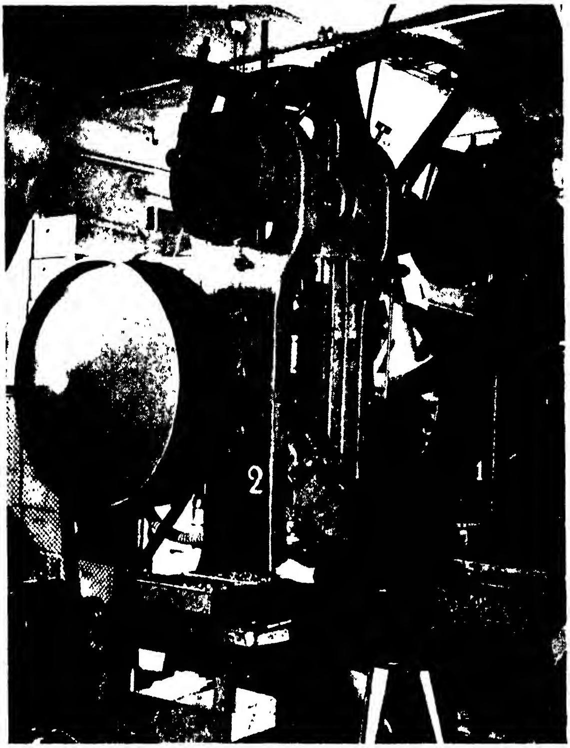

FIG. 131.—Modern 80-ton semi-automatic tube extrusion press of Danish manufacture.

(*Courtesy of International Tin Research and Development Council.*)

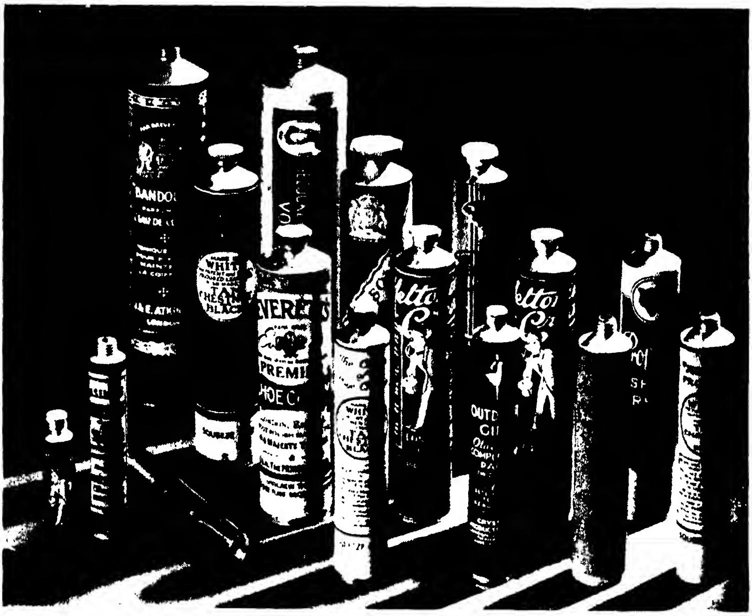

FIG. 133.—Collapsible tubes in aluminium.

(*Courtesy of H. G. Sanders & Son, and British Aluminium Company.*)

heat developed during the actual working stroke, which occupies about $\frac{1}{10}$ second, is sufficient to raise the temperature of the newly formed tubes to over 100° C., so that they are obtained in the fully recrystallized condition. Possibly on account of the inherent experimental difficulties, there is very little published information regarding the effect of such factors as the composition and structure of the metals employed; form of punch, speed of operation, etc.

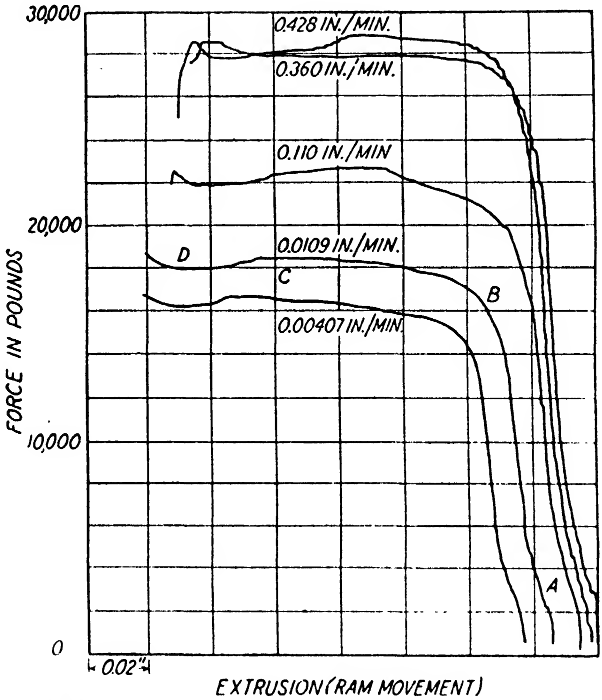

FIG. 132.—Autographic pressure records for the extrusion of tin at various speeds.

Derge and Warren Stewart [1], in a study of the process in an experimental apparatus, have investigated the form of pressure curves obtained at different speeds of extrusion for alloys of tin containing small amounts of copper, and for various grades of pure tin. The changes in pressure as the punch descends are shown in the autographic records in Fig. 132. Between *A* and *B* the slug is compressed in the die and elastic strain in the apparatus is taken up. During the actual extrusion occurring between *B* and *C* it will be observed that the pressure remains approximately constant, later tending to rise when a thin wafer only of the original slug remains in the die. These results confirm those found by Pearson and Smythe[2] for the extrusion of rods from long billets in that the pressures required are found to vary exponentially with the extrusion speed. Any attempt to extrapolate these results to cover the very high rates which obtain in impact presses is, however, rendered unsafe owing to the heating effects mentioned above. Owing to the marked influence which temperature has on the resistance to deformation (cp. page 132), this generation of heat during working must exercise a profound effect on an impact as compared with a slow-forming operation.

The Impact Extrusion of Aluminium. Following upon pioneer work in the U.S.A. and Germany, the extrusion of aluminium by impact methods started as a commerical proposition in 1920. Besides being concerned with the manufacture of collapsible tubes, such as those in Fig. 133, many other articles in the form of deep shells are also made, and the process enters into competition with methods involving deep drawing sequences. Such additional outlets include cans and capsules for food products, radio condensers and shielding pots, electric torch cases, etc.; there are also applications in the textile and aircraft industries, while the use of the method in the manufacture of aluminium cartridge cases was under consideration in Germany before the outbreak of war.

Although as compared with cold drawing, the call made upon the tools is very heavy, the advantages of extrusion are numerous. A single operation in the latter replaces several drawing stages with intermediate annealing treatment, so that fewer machines are required and production is more rapid. In addition, the higher strength of the extruded product often permits a reduction in the thickness of the article to be made. The point at which extrusion can economically replace drawing depends not only on the depth of the shell required, but also on other factors such as shape. For instance, rectangular shells which present difficulty in drawing, are readily extruded. For plain round shells with a flat base it may be taken that extrusion becomes profitable when the length exceeds 1½ times the diameter. Other special advantages are that the thickness of the base is not related to that of the wall, but may be regulated by adjustment of the stroke of the press; the base can be made flat or conical and may include integral lugs, which need not be centrally placed. Holes in projecting lugs or nozzles can be pierced during extrusion only if they are coaxial with the shell. The sides of shells, on the other hand, must usually be straight, of even thickness, and free from projections; fluting of the walls, for example, must be done subsequently if it is required. Embossed lettering can only be formed on the base, by engraving the bottom of the die.

Though they are generally rival processes, impact extrusion and drawing can often be combined with advantage, shells made in a preliminary stage by the former being later increased in depth by drawing. There are indications in this direction of a fruitful field which is only beginning to be exploited.

The grade of aluminium for impact work is of very considerable importance, for while metal of a purity of 99·5 per cent can be used, it imposes arduous conditions on the tools, causing wear to be heavy, and a purer metal of 99·75 per cent is much to be preferred. Following the introduction in 1936 of the refined product containing 99·9–99·99 per cent of aluminium, it has been used in increasing amounts, possessing distinct advantages on account of its high ductility. Its physical properties are shown in Table 22.

TABLE 22

Al Per cent	H_B	Maximum Stress Tons/sq. in.	Elongation Per cent
99·5	22	5 –5·5	35–40
99·99	14	2·3–3·0	40–50

Despite the movement towards the softer grades of aluminium for most purposes, where superior strength is required there is a tendency to look in the direction of the more easily worked aluminium alloys, and the production of shells in several of these has been achieved.

As a general rule aluminium is extruded cold in impact methods, although by heating the blanks to 175°–250° C., an advantage is obtained both in the diminution of pressure on the tools, and in increasing the depth of shell which it is possible to form. The following figures, quoted by Zeerleder[3], show the relative resistance to extrusion offered by aluminium and some of its alloys at 20° C.

and at 250° C., from which it will be inferred that many of them do not lend themselves to impact extrusion.

TABLE 23

Material	H_B at 20° C.	Specific Extrusion Pressure Kg./sq. mm. At 20° C.	Specific Extrusion Pressure Kg./sq. mm. At 250° C.
Refined aluminium (99·99 per cent)	14	81	–
Aluminium (99·5 per cent) . .	23	114	42
Aluman	32	120	–
Anticorodal	34	152	83
R.R.56	52	194	–
R.R.59	58	204	–
Avional D	58	230	162
Peraluman 2	58	240	–

After the blanks have been cut, they must be annealed to make them as soft as possible for extruding. In this connection the grain-size is of some importance, for while slightly lower hardness is associated with a coarse-grained structure, such a structure is most undesirable in other respects. In a series of tests on aluminium made by Stelljes [4], blanks having grain-sizes varying from 150 per sq. mm. to 0·04 per sq. mm., with hardnesses ranging from 20·4 to 18·6, were extruded. A coarse grain in the blank was found to persist in the shell, giving rise to a rough, orange-peel effect on the surface. Photographs illustrating this also serve to give an insight into the manner and distribution of the deformation, and are reproduced in Fig. 134. The material which first passes over the punch to form the top of the shell suffers least deformation, but this increases as extrusion proceeds, and finally, towards the base, a zone of equi-axed crystals may be seen. From this it would seem that increasingly severe work, coupled with a rise in temperature, has brought the metal to a point where recrystallization has taken place locally.

A few of the blank shapes which are used are shown in Fig. 130. The cupped form, with an angle of 45°, is of benefit in securing a deep shell. When a nozzle is to be formed on the base, the blanks are pierced to allow the passage of the projection on the end of the punch. Rectangular shells are formed from similarly shaped blanks.

The work-hardened condition in which the shells leave the press is retained where stiffness is desirable; on the other hand,

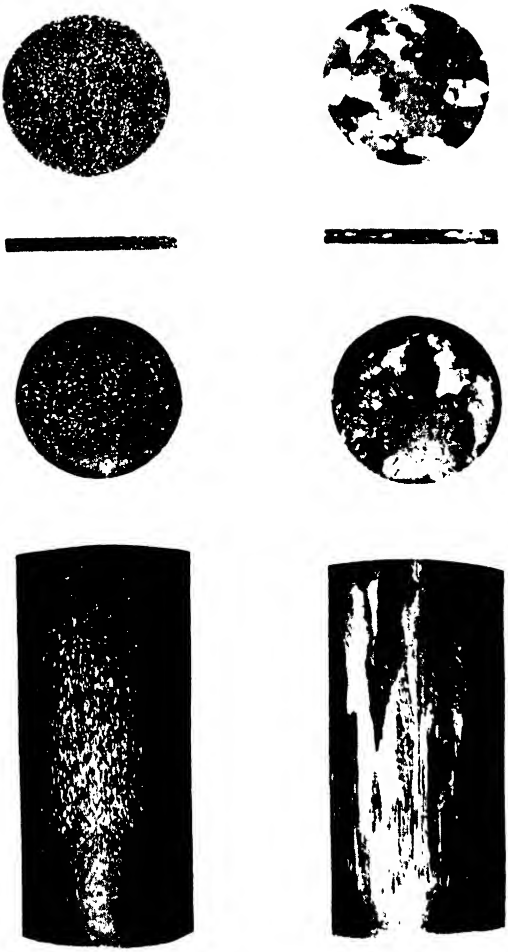

FIG. 134.—Impact extruded aluminium shells from blanks with different grain-size. The macro-etchings show, starting from the top, the surface and section of the blanks, and the base and side of the extruded shells.

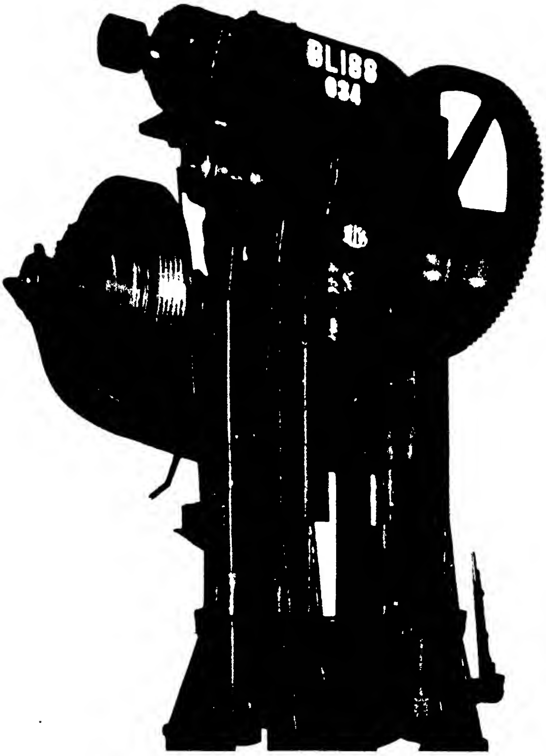

FIG. 135.—350-ton Bliss press for impact extrusion of aluminium.

for collapsible tubes, or in cases where further working remains to be done, complete or, possibly, local annealing is carried out.

Aluminium is much stiffer to work than lead or tin, so that it is necessary to have much heavier presses than for the latter. One of these is illustrated in Fig. 135. The extruded shells are stripped by compressed air, as with the softer metals, or, in the case of tubes with perforated ends, by means of spring stripper plates which push them off the punch on its upstroke.

The range of impact extruded shells in aluminium is from 0·5 in. up to 5 in. in diameter, with a maximum length for the widest of these of about 10 in., the thickness to which the walls can be made varying with the size from 0·004 in. to 0·06 in.

The Production of Zinc Shells. Zinc is a comparative newcomer in the domain of impact extrusion. The question of purity affects its successful working to an extent even greater than with aluminium, and practice is confined almost wholly to the use of the special grades containing 99·99 per cent of the metal, though restricted use is made of an alloy with 0·6 per cent of cadmium for dry battery cells. In addition to their application in this direction, extruded zinc parts find outlets in the radio industry and for small electrical units, having one advantage over aluminium in the ease with which they can be soldered. Production is mainly confined to cylindrical parts. The metal is unsuitable for making collapsible tubes.

The blanks are preheated prior to extrusion to bring them into the range from 150° to 180° C. in which the metal possesses considerable plasticity. Chase[5] gives the limiting sizes which come within practical operation as being from 0·437 in. outside diameter to a maximum of 2·125 in., with a lower limit for the wall thickness of 0·014 in. for the smallest shells, to 0·020 in. for the largest. These dimensions can be held to 0·003 in., while the thickness of the base can be controlled to 0·007 in. The longest shells, obtainable with the greatest width, are 8 in., and the smallest 2½ in.

The Hooker Process of Impact Extrusion. The impact extrusion of soft metals had long been established when, in 1903, George W. Lee stumbled across an interesting modification which has proved valuable in making thin tubes in the harder metals. While he was engaged at Binghampton, N.Y., U.S.A., in the manufacture of collar-studs, Lee conceived the idea of the bachelor button type of fastener consisting of two parts, a stud and a press fastener. As it was made at first, the stud was pressed from an aluminium blank to the form shown at *a*, Fig. 136. It occurred to him that by a slight modification of the tools, a stud of improved appearance, as seen at *b*, could be produced without additional cost. This seemed to require that the punch should have a small projection at the end; one made with the projection somewhat longer than had been the intention was found, surprisingly, to give, when it was tried, a short length of tube attached to the flanged part of the stud, as at *c*. This result led him to make further experiments on the same lines, and, finally, to seek patent protection for a method of producing tubular bodies by extrusion in this way. Considerable difficulties were encountered in obtaining this, since the Patent Office at Washington could not be convinced from the drawings that the method was feasible, and only agreed to grant a patent after arrangements had been made for the process to be witnessed.

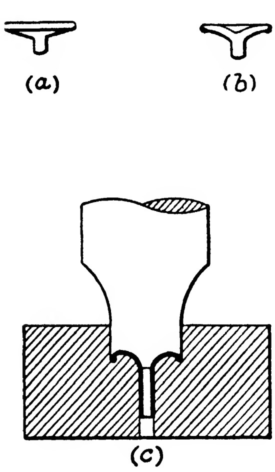

FIG. 136.

Despite all his efforts, Lee was unable to make a commercial success of his idea, and after a few years of endeavour, he sold the rights to a patent lawyer, Leslie Hooker, who had been following the process, and from whom it derives its present name. Hooker and his associates formed a company with a factory at Pawtucket, R.I., where, when some improvements in detail had been effected, they were able to bring it to the productive stage.

The Hooker process as it is run to-day remains fundamentally the same as when Lee developed it. Briefly, it consists in introducing a cold blank into a strongly supported cylinder containing a die bush, into which is entered a punch made to fit the die closely so as to prevent the escape of metal round its sides. The pressure exerted by the shoulder of the punch upon impact first squeezes up the blank, and then as the punch continues to descend, causes it to extrude through the annulus formed by the projection on the punch and the die bush. The diagram in Fig. 137 shows the principal features of the method. The close resemblance which the arrangement bears to that used in the production of tubes by direct extrusion of hot billets in hydraulic presses may be remarked.

While the Hooker method is applicable to lead and tin, it is chiefly utilized in fabricating metals which undergo work-hardening during deformation. The metals which are most suitable are those possessing a good degree of ductility, such as copper, 70/30 brass and aluminium. For these materials Hooker extrusion has the advantage over the other impact method that the pressure required in forcing a thick-walled blank down into a thin shell is less intense than in making the metal flow up round the punch; thus the tools, which are necessarily subjected to extremely arduous duties in bringing about large deformations in a single blow on such stiff metals, are relieved to some extent.

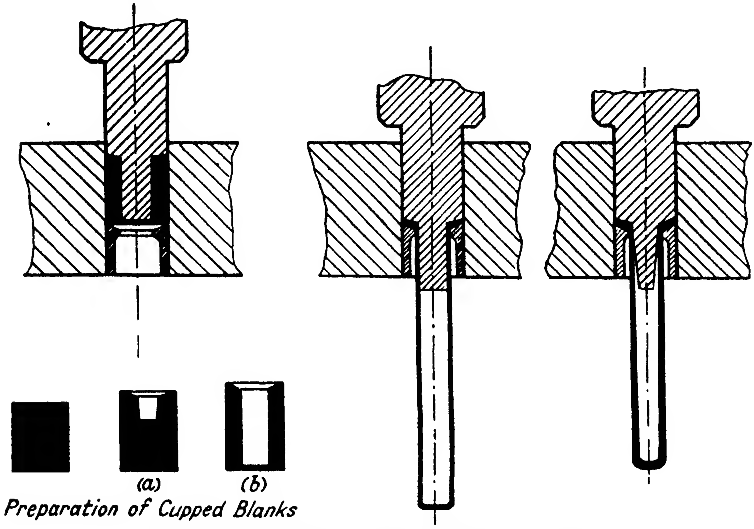

FIG. 137.—Hooker impact process for tubes.

Flat blanks are occasionally used in Hooker working, but the cupped type, despite the additional coining which they entail, are preferable and economically worth while, since by leaving a lower degree of reduction to be effected by extrusion, thin tubes are more readily made. Open-ended or closed tubes can be made at will. If a heavy base is required, as for cartridge-cases, the blank is cupped so as to leave the bottom thick; tubes in which the base is to have the same thickness as the walls are made from blanks which, after cupping, are stamped to thin the base to the extent required, while for open-ended tubes a thickness of only a few thousandths of an inch is left in the base after blanking. By tapering the end of the punch, so that, as it descends into the die during the extruding motion, the annulus diminishes, tubes with a tapered wall thickness can be produced. The sketches in Fig. 137 show some of these variations.

Used at one time extensively in the U.S.A. for forming brass cartridge-cases, the process is utilized chiefly at present for the manufacture of copper tubes for the radiators of liquid-cooled aircraft engines, and for heat exchangers. The following is an outline of the sequence of operations for this purpose. In the first place, high-grade copper of at least 99·9 per cent purity must be selected, and it is usual to employ the electrolytic product. Lightly drawn rod is cut in a shearing machine into cylinders $\frac{7}{16}$ in. in length, and these are formed into blanks for extrusion in two operations in heavy draw presses. After a preliminary anneal at 600° C., they are indented in the first stage to the form shown at *a* in Fig. 137, and are then re-annealed before being fully indented as at *b* into cups $\frac{9}{16}$ in. in length, $\frac{7}{16}$ in. in diameter, with a wall $\frac{1}{10}$ in. thick. These are once again annealed before being extruded directly into tubes 10 in. long, 0·265 in. diameter, having a thickness of 0·006 in. ± 0·0005. If necessary, the wall thickness can be reduced to as little as 0·004 in. The tubes are produced in a severely work-hardened state, so that before the ends can be pressed into the final hexagonal form, local annealing must be carried out.

The presses which have been found most satisfactory for the process are straight-sided crank presses of the geared or plain type, with a stroke of only about 2 in. One of these is shown in Fig. 138. Each press carries two sets of dies, above which the punch-holders are mounted on slides to which a transverse reciprocating motion is given, travelling at half the speed of the press. Each slide carries two punches, one for extrusion, the other for trimming. Taking the sequence of events for one of these sets: a pin-ring hopper feeds the cup blanks on to a friction dial-plate, and, as the cross-head of the press descends, the extrusion punch picks up one of the cups, while at the same time the trimming punch enters the die and severs the tube previously extruded from the residual flange or discard which it lifts out of the die on its nose, the released tube dropping out on to a tray below the press. The slide now moves across, and on the next down-stroke the extrusion punch, carrying the blank, enters the die and, after compressing the blank, extrudes it into a tube. Simultaneously the trimming punch enters a spring stripper which pulls off the discard on the upward stroke. The other slide with its two punches is meanwhile carrying out the same sequence over its particular die, but on the opposite stroke, so that tubes are extruded alternately from each die at every revolution of the press, which operates at 120 S.P.M., giving a production of about 45,000 tubes in an 8-hour day. Crane refers to a modification of the process by which, instead of using the reciprocal motion and trimming punch, a single punch is fixed to the cross-head. One blank follows another in succession without clearing the discard out of

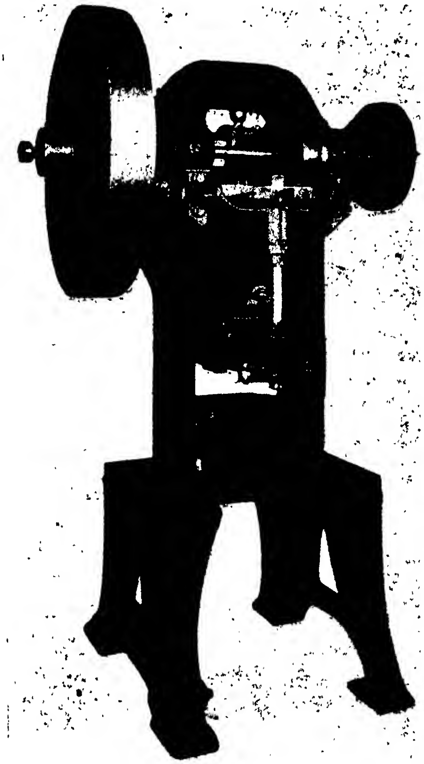

FIG. 138.—40-ton Bliss press used for the Hooker process.

the die; each new blank forcing out the remnant of the previous one. The consecutive tubes, separated by a film of lubricant, are said to be easily broken apart for trimming.

The die assembly consists of a soft steel holder plate shrunk round a die-ring of hardened high-speed steel. Within the die-ring is fitted a die-bush, also of high-speed steel, which is replaceable when it becomes worn. The average life of this part, working on copper, is about 60,000 operations. The upper surface of the bush, forming the step in the die with a bevel of about 30°, is highly polished and is given a small radius at the inner edge. The aperture of the bush, which, of course, controls the outside diameter of the tubes, is ground and lapped to size. The extrusion punch is made in two parts, so that the projecting nose which serves as a mandrel and suffers the heaviest wear, can be renewed, usually after making about 15,000 to 20,000 tubes. The extruding shoulder on the punch is tapered to 20°; actually extrusion takes place most readily with a flat punch and steep die, but a compromise is effected on this to reduce the amount of discard.

The astonishing reductions which it is possible to effect on copper and brass in what is apparently a cold-forming process would probably repay fuller investigation than it has hitherto received. The reduction of 95–97 per cent imposed in the extrusion of the copper tubes described above, is far in excess of that which can be given in other forming processes without the introduction of annealing stages. The case of 70/30 brass is similar, though the reduction by extrusion does not usually exceed 75 per cent. Attempts to carry out the extrusion operation slowly instead of under impact invariably results in the breaking of the tools under the excessive pressure, and the success of the impact method is, therefore, related to the speed of deformation. Considerable heat is, of course, generated during the interval of about $\frac{1}{15}$ of a second, during which compression and extrusion of the blank takes place. Foisy[6] states that during production of copper blanks of the size given, weighing 7·5 gm., the initial pressure on the punch is 50,000 lb., falling to 10,000 lb. when flow has started. Taking the mean pressure as 20,000 lb., and neglecting friction losses in the machine, and transfer of heat to the tools, the heat developed would be sufficient to raise the copper to 360° C., at which self-annealing would be possible. It is certainly the case that unless the tools are kept cool by copious lubrication, the tubes produced are in the soft condition. Ordinarily, however, the dies are flooded with oil, and the tubes leave the press at 150° –200° C., showing work-hardening. An explanation which may be offered for the unusual plasticity under impact, lies in the well-known fact that the extent of hardening as the result of deformation is dependent on the temperature, being less at high than at low temperatures in the cold-working range; hence the heating up of the blank as it is upset and begins to flow allows greater subsequent deformation than would ordinarily be possible without ductility becoming exhausted or the pressure becoming excessive. Jevons[7] has put forward the interesting suggestion that, as indicated by high-speed tensile tests, hardening as the result of deformation is not instantaneous, but takes an appreciable, though small, time to manifest itself, so that work done under impact may be complete before hardening has asserted itself. It may be pointed out that indications of the existence of a stage of momentary fluidity in metals during straining are not lacking, and if a phenomenon of this kind was definitely established it might well prove to be of importance in cold-forming processes generally.

REFERENCES

[1] G. Derge and J. Warren Stewart. The Extrusion of Tin and its Alloys. *Trans. Amer. Inst. Min. & Met. Engrs.*, 1940, **137**, 389.

[2] C. E. Pearson and J. A. Smythe. The Influence of Temperature and Pressure on the Extrusion of Metals. J. *Inst. Metals*, 1931, **45**, 345–69.

[3] A. v. Zeerleder. *Tech. des Aluminiums* (published by Akademische Verlagsgesellschaft, Leipzig), 1938, 265.

[4] H. A. J. Stelljes. Questions Regarding the Worked Structure of Pure Aluminium in Impact Extrusion. *Aluminium*, 1939, **21**, 279–300.

[5] H. Chase. Extruded Zinc Parts Produced by Impact Methods. *Product. Eng.*, 1937, **8**, 214–15.

[6] G. A. Foisy. The Manufacture and Application of Extruded Copper Tubes. *Trans. Amer. Soc. Mech. Eng.*, 1927, **50** (9), 93.

[7] J. D. Jevons. New Applications for Press Work. *Metal Industry* (*London*), 1938, **53**, 615–18.

CHAPTER X

SOME SPECIAL APPLICATIONS OF EXTRUSION

Extrusion-Forging. An example of a combined forging and extrusion process is to be found in the manufacture of poppet valves for internal-combustion engines. These are made in one operation from a heated steel blank which is partly extruded through a die to form the shank, leaving the remainder of the metal to form the head. The general arrangement of the punch and die used for this is shown in elevation in Fig. 139. The die is lubricated before the operation with a high-flash oil. In the method used at the Chevrolet works[1] slugs 1¼ in. diameter and $\frac{15}{16}$ in. long are sheared off steel bars which have been heated to 850° C. These slugs are then smoothed and descaled in tumbling barrels before being reheated to 1100° C. in a gas-fired furnace. Extrusion is performed in a 300-ton punch press, in which the blanks are fed directly into the die, where they are struck by the descending

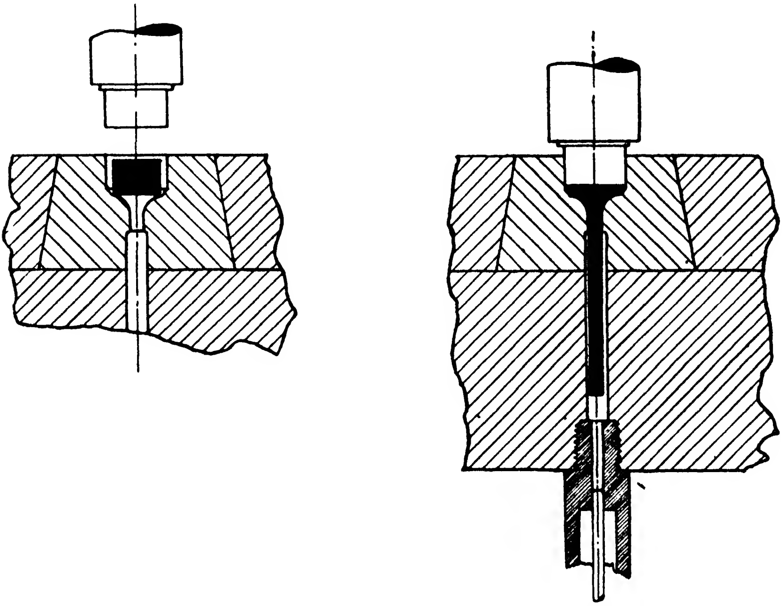

FIG. 139.—The extrusion of steel poppet valves.

punch. The metal is squeezed up to fill out the die and is then forced, in part, through the aperture in the base to form the valve stem. The base of the die is so shaped that the material remaining unextruded when the punch has made its full stroke forms the head and shoulders of the valve. After extrusion the valves are tumbled again, cut to length in a punch press, and finally annealed. A chrome steel with the following composition is typically used for the valves: 0·4–0·5 per cent carbon, 0·3–0·5 per cent manganese, 3·0–3·5 per cent silicon, 8–10 per cent chromium, 0·025 per cent sulphur and phosphorus.

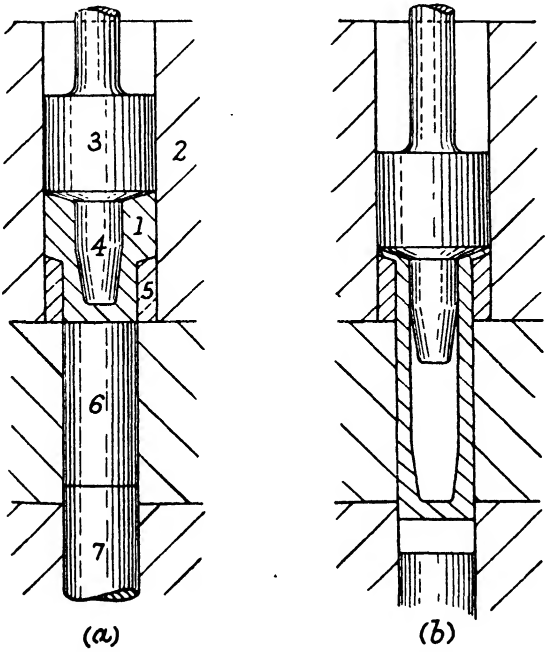

FIG. 140.—A forging-extrusion operation.

A method * of forming projectile shells from steel billets by a continuous operation in which a forging stage in a closed die is followed by extrusion is illustrated in Fig. 140. To begin with a hot billet, 1, inserted in a press container, 2, is acted upon by a ram, 3, with attached mandrel, 4, so as to force the metal into the die-chamber formed by the die-ring, 5. During this the lower end of the die-ring is closed by a plug, 6, to permit the base of the shell

* Brit. Pat. 469,550.

to be formed and consolidated. The completion of this stage is shown at (*a*). In one method of operation, the plug is held in its operative position by a hydraulic ram, 7, the pressure on which becomes released when the pressure on the plug exceeds a predetermined value. When this is reached, and the plug is free to be displaced, the operation is completed by the further descent of the press ram causing the extrusion of the remaining portion of the billet through the die-ring and so giving rise to the hollow shell as seen at (*b*).

The production of hollow forgings includes many examples in which extrusion is a factor in that the dies are only semi-enclosed, and have an opening at the top through which the punch is entered, leaving an annulus through which the metal, while going partly to take up the special configuration of the die cavity, is also forced out to form part of the object. These really result from an out-growth of processes for making shells and projectiles by piercing methods. Cone[3] has described the practice in America of the Bethlehem Steel Corporation in making speciality forgings in nickel-chrome, chrome-molybdenum, nickel-chrome-molybdenum, and corrosion-resisting steels, as well as in ordinary carbon steels. Billets broken off long steel bars are preheated to suitable temperatures in the range 1150°–1260° C. These are inserted in the die where they are pierced by the descending punch, causing the die

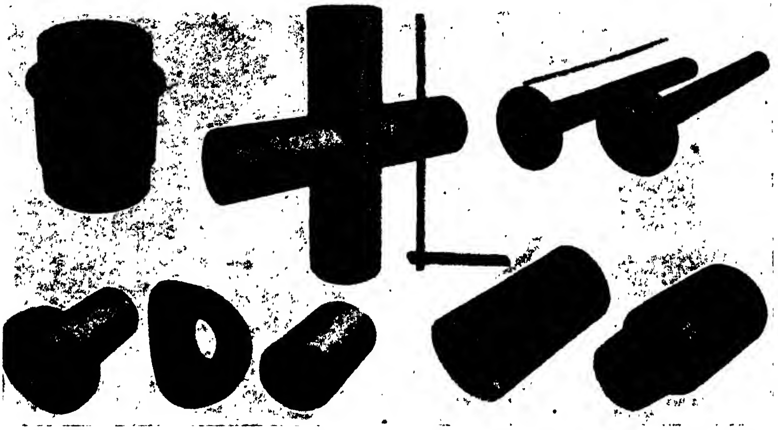

FIG. 141.—Examples of hollow extrusion-forgings.
(*Courtesy of " Steel."*)

to be filled out and the extrusion of part of the metal. The hollow pressings so derived are then often push-drawn by being placed on the end of a long mandrel and forced through a series of drawing rings. In this way they are elongated and have their wall thickness reduced. Instances of the above kinds of forgings are illustrated in Fig. 141, which include those for such applications as cylinder sleeves for aero-motors, trunk pistons for loco-boosters, valve bodies, and short lengths of tube for bearing races.

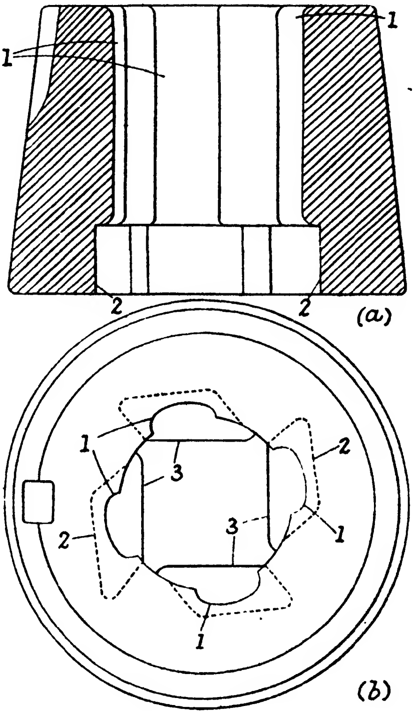

Fig. 142.—Sketch of the special ram and die used in the extrusion of turbine blades.

A further interesting adaptation of extrusion is in the production of turbine blades. It is possible to form a turbine blade with an integral root from a round or flat billet, much after the manner described above in making poppet valves, by extruding part of the metal to form the blade section and leaving enough of the billet in the container to form the root. In the case where a round billet is used, the root section can be flattened while the metal is still hot after removal from the press. A method* recently devised by Henry Wiggin & Co., however, gives the advantage that several blades, each with integral root, are extruded simultaneously from one billet, and that the root portion receives more adequate working. The essential feature of this process lies in the use of a specially shaped container, or die, the inner wall of which is formed with a number of recesses each shaped to correspond with a turbine blade of the required form. In Fig. 142, (*a*) and (*b*) show the sectional elevation and plan respectively of such a container designed to

---

* Brit. Pat. 459,742.

make four blades at the same time. The bottom of each recessed opening, 1, is shaped as indicated at 2, so as to conform with the desired shape of the root of the blades. The container, which is mounted in a 400-ton vertical hydraulic press, has a closure block at its lower end during the extrusion stroke. The extrusion ram has an approximately squared end, indicated by the lines 3. A hot cylindrical billet having been inserted, the extrusion ram enters the container and forces the metal to flow outwards into the recesses, whence it extrudes upwards into the space between each recess and the exterior of the ram.

On completion of the working stroke, the article consists of a thin residual disc in the base of the container with four rooted blades extending from it at right angles. By moving the closure block laterally to a position where a large opening in it coincides with the bottom of the container, the extruded assembly can be ejected by the ram and removed from the press.

The process can be applied to produce blades of different section and length in such materials as monel, austenitic heat-resisting steels, stainless steel, as well as in brass or copper. As extruded, the blades in some of these metals tend to be somewhat soft and, with the object both of bringing up the physical properties and of finishing the blade profile to very accurate dimensions, they are subsequently subjected to a cold rolling or swaging process which increases their hardness.

The Extrusion of Cathode Copper. An interesting technique which deserves attention is that developed in the U.S.A. for the conversion of electro-deposited copper cathodes into commercial products in the form of tubes, rod, wire and strip without the necessity for remelting it in the first place[3, 4]. In the result a material of very high purity is obtained, free from all but the merest traces of oxide, which compares favourably in its analysis, and electrical characteristics, with O.F.H.C. copper. It also meets the usual hydrogen-anneal bend test for the latter. The principle of the process depends on the fact that if particles of cathode copper are subjected to a stream of reducing gas at a high temperature and the clean surfaces are then brought together under pressure, they cohere. Perfect metallic union occurs, with crystal intergrowth between the surfaces so as to produce a homogeneous mass. The process is covered by the term " coalescence ".

The operations which are involved are: (*a*) the production of the cathodes in a brittle condition to allow them to be broken up, (*b*) cold briquetting, (*c*) heating and cleaning in a reducing atmosphere, (*d*) simultaneous coalescing and extrusion. The practice followed in the deposition of the brittle cathodes has been adapted to that of the standard multiple tankhouse, with precautions against entry of dust. Blanks similar to the ordinary starting sheets, but attached by soldered contact to the cathode bars, are dipped, before immersion in the depositing tanks, in a bath of embrittling agent. This consists of a solution of corn oil and asphaltum in petrol and carbon tetrachloride. During deposition the film of reagent prevents close adherence of the metal to the blank, and also between the deposited crystals themselves. After washing, the brittle deposit is stripped by rapping it with a hammer. It is then passed through 4-in. openings in a hard-drawn copper grizzly, and after automatic weighing, is conveyed to the briquetting press. This is a hydraulic press in which cylindrical billets approximately 300 lb. in weight, 9¾ in. in diameter, and 16 in. in length are pressed up cold under a pressure of 15 tons per square inch. A density of 83 ± 2 per cent of that of massive copper is aimed at so as to give the necessary bonding strength and at the same time allow gas penetration in the next stage.

Gas purification is carried out in a "pusher" type of gas or electrically heated furnace. The briquetted billets rest on carriers, and are kept isolated to prevent them sticking to one another. They remain in the furnace for 3 hours and are brought up to about 850° C. The reducing gas mixture, which must contain hydrogen and/or carbon monoxide and be freed from sulphur, has a high proportion of water-vapour. Its action is to reduce any surface oxide and to eliminate most of the sulphur in the metal, as well as removing about 15 per cent of the arsenic and antimony.

Special measures are required to transfer the hot billets from the furnace to the extrusion press in the same atmosphere in order to avoid reoxidation of the copper aggregate. Each billet is pushed by a hydraulic ram through a gas-tight metal housing into a sealed loading chamber in front of the press container. The extrusion ram then pushes it into the container. Apart from this the extrusion press is of the conventional horizontal type. The container used is 10¼ in. in diameter, and extrusion pressures from 10 to 30 tons per square inch are required, the latter for products down to 0·6 sq. in. in cross-sectional area. As in standard practice, flats and small rods are coiled hot as they come from the press. Table 24 shows the average composition of the coalesced copper product in comparison with that of wire-bar from the same anode source, and with that of O.F.H.C. copper.

TABLE 24

	Wire-bar from Tough Cathodes	Coalesced Copper	Oxygen-free, High-conductivity Copper
Cu	99·9534	99·9871	99·9800
O	0·0372	0·0035	0·0000
S	0·0014	0·0008	0·0025
As	0·0008	0·0007	0·0008
Sb	0·0016	0·0013	0·0028
Se, Te	0·0002	0·0003	0·0031
Ni, Co	0·0005	0·0005	0·0016
Fe	0·0005	0·0005	0·0015
Pb	0·0004	0·0005	0·0004
Ag	0·0016	0·0020	0·0016
Au	0·000026	0·000033	—

It will be apparent that, in principle, the foregoing process has a near resemblance to those methods by which powdered metal aggregates are consolidated and shaped into serviceable forms by the application of pressure and heat. The differences lie chiefly in the much smaller sizes of particles used in ordinary powder-metallurgy practice and in the means adopted for shaping, which in the latter case is usually carried out in a cold pressing operation followed by sintering. The existence of definite limitations in regard to the size, and especially the length, of product that can be made in pressed powder compacts has caused some attention to be given to the possibility of extruding the powders. Though the idea has attractions from more than one point of view, there are likely to be difficulties in its application. These are discussed in a survey of the question by Jones.[6] The above refers to dry powders, but in other directions extrusion has for long found application in connection with metal powders, for it formed the basis of one of the early methods of manufacturing metal lamp filaments. In this, tungsten powder admixed with a binder to give plasticity was extruded into threads which were then rendered strong and tenacious by sintering. More recently, the commercial production of rods, tubes, nozzles and other shapes, consisting of hard carbides of metals such as tungsten, tantalum, and titanium, has been undertaken. Here again a plastic binder, such as starch or gum arabic, is mixed with the carbide powder for the extrusion process, the products being subsequently baked, and finally sintered at a high temperature in a protective atmosphere. An application of a similar kind lies in the preparation of special rods for arc welding. An interesting feature of this is that a small amount of flux is incorporated with the comminuted metals, besides the usual binder to facilitate extrusion. An instance of such a mixture is one consisting of 38 per cent copper, 53 per cent phosphor-copper (15 per cent P), 8 per cent tin, and 1 per cent borax. The rods are sintered at 235° C.

REFERENCES

[1] J. B. Nealey. The Extrusion and Annealing of Chevrolet Motor Valves. *Heat Treating and Forging*, 1936, **22**, 523–4.

[2] E. F. Cone. Extruded Steel Forgings. *Steel*, 1934, **94**, 25–7.

[3] H. H. Stout. Coalesced Copper: Its History, Production and Characteristics. *Amer. Inst. Min. and Met.*, Tech. Pubn. 1238, 1940.

[4] J. Tyssowski. The Coalescence Process for Producing Oxygen-free Copper. *Amer. Inst. Min. and Met.*, Tech. Pubn. 1217, 1940.

[5] W. D. Jones. The Extrusion of Metal Powders. *Metal Industry* (*London*), 1940, **57**, 27–30.

INDEX