ENGINEERING MATERIALS

ALSO BY

A. W. JUDGE

Companion Volumes

ENGINEERING MATERIALS

Vol. I. **The Ferrous Metals. 25s.** net.

Vol. II. **Non-ferrous and Organic Materials. 30s.** net.

AUTOMOBILE ELECTRICAL MAINTENANCE

Supplies the need for an inexpensive but informative work for maintenance engineers, motor mechanics, and owner-drivers concerned with the upkeep, maintenance, and overhaul of the electrical equipment of motor cars. **7s. 6d.** net.

AUTOMOBILE ENGINE OVERHAUL

A practical handbook for service and maintenance engineers and owner-drivers. It gives general information on dismantling and overhauling the engine, decarbonizing, valve removal and reconditioning, the piston and piston rings, engine faults and their causes, etc., and other matters of importance. **5s.** net.

AUTOMOBILE AND AIRCRAFT ENGINES

This volume records the results of modern scientific research into all branches of the subject. A recognized standard work for designers and students. **42s.** net.

Pitman House, Parker St.
Kingsway, London, W.C.2

ENGINEERING MATERIALS

BY

A. W. JUDGE
A.R.C.Sc., Wh.Sc., D.I.C., A.M.I.A.E., A.F.R.Ae.S., M.S.A.E. (U.S.A.)
AUTHOR OF
"AUTOMOBILE AND AIRCRAFT ENGINES," "AUTOMOBILE ELECTRICAL MAINTENANCE," "AUTOMOBILE ENGINE OVERHAUL," ETC.

VOLUME III
THE TESTING OF MATERIALS

SECOND EDITION

LONDON
SIR ISAAC PITMAN & SONS, LTD.
1947

SIR ISAAC PITMAN & SONS, Ltd.
PITMAN HOUSE, PARKER STREET, KINGSWAY, LONDON, W.C.2
THE PITMAN PRESS, BATH
PITMAN HOUSE, LITTLE COLLINS STREET, MELBOURNE
UNITEERS BUILDING, RIVER VALLEY ROAD, SINGAPORE
27 BECKETTS BUILDINGS, PRESIDENT STREET, JOHANNESBURG

ASSOCIATED COMPANIES
PITMAN PUBLISHING CORPORATION
2 WEST 45TH STREET, NEW YORK
205 WEST MONROE STREET, CHICAGO
SIR ISAAC PITMAN & SONS (CANADA), Ltd.
(INCORPORATING THE COMMERCIAL TEXT BOOK COMPANY)
PITMAN HOUSE, 381-383 CHURCH STREET, TORONTO

BOOK
PRODUCTION
WAR ECONOMY
STANDARD

THE PAPER AND BINDING OF
THIS BOOK CONFORM TO THE
AUTHORIZED ECONOMY STANDARDS

MADE IN GREAT BRITAIN AT THE PITMAN PRESS, BATH
D7—(T.5305)

PREFACE

THIS volume is the third of a completely revised and largely rewritten version of a work published originally about twenty-five years since under the title of *Aircraft and Automobile Materials*. It completes the series of three recent volumes issued under the present more general title of *Engineering Materials*.

This book is intended primarily for engineers, designers, test assistants, students, and other users of materials as a general introduction to the subject of testing methods and appliances, to ascertain the behaviour of materials under conditions simulating those of their practical application. In the present treatment, the term engineering materials relates to ferrous and non-ferrous metals and their alloys, and to plastic materials, but excludes other organic materials, e.g. the timbers, mainly for reasons of allowable space.

The broad scheme adopted is, first, to give a general outline of certain theoretical principles relating to the strength of materials considered essential to a proper understanding of the title-subject, and then to continue with accounts of the behaviour of materials under various test conditions, methods of conducting tests, and testing machines and associated apparatus.

Special consideration and additional space have been given to both the theoretical and practical aspects of Fatigue, Impact, and Hardness Testing, and the results of typical investigations are discussed.

New sections which have been included in this edition are those on the Testing of Cast Iron, Tests for Thin Sheet Metals and Strip, Impact Tests, and Special Testing Machines; there is also included an account of the Testing of Plastic Materials—a subject at present in its earlier stages. In view of the importance of the various Non-destructive Methods of Testing Materials, and of the big developments of such methods in recent times, it was considered fitting to include accounts of the acoustical, electrical, and magnetic aspects of the subject, with special reference to the location of surface and internal flaws, and to the detection of non-standard conditions in metals and metal articles. Included in this section is an outline of the examination of materials by X-rays and Gamma Rays, together with some information on engineering applications of X-ray Diffraction Patterns or Photographs.

The final section of this book includes accounts of certain Indirect Methods of Stress Determination, e.g. by strain measurements, thermal changes, and the use of polarized light with transparent models. In this section, also, there is a useful account of Electrical Strain Gauges, now being more widely employed for measurements of stresses in complex engineering structures, such as aircraft frames and wings, propeller blades, boiler shells, bridges, and similar built-up constructions.

In view of the wide range of subjects dealt with special attention has been given to the preparation of the index. A perusal of the latter will give some idea of the scope of the book and at the same time enable special items to be readily identified.

It is realized that the subject of testing materials is so extensive that it has been possible to give only a more general account, but in most instances the footnote references will enable the original sources of information to be consulted by those wishing for fuller particulars.

A. W. JUDGE

FARNHAM, SURREY
1945

CONTENTS

CHAPTER I

Experimentally determined stresses—Stress—Elastic materials: Hooke's law—Stress and strain conditions in actual metals—Slip bands in metals—Transverse strain—Bulk or volume modulus—Relation between elastic constants—Work done in elastic strain: application to springs, etc.—Simple stresses (inclined sections)—Complex stresses—Combined normal and shear stresses—The stress ellipse—More general case of principal stresses—Properties of beams—Bending moments and shearing forces—B.M. and S.F. diagrams—The stresses in beams—The engineer's beam theory—Stresses across the section of a beam—Shear stress in beams—The resultant stresses in beams—Deflection of beams—Mathematical expression for curvature, slope, and deflection—Special cases of loaded beams—Shape of bent beam (transverse bending)—Work done in bending a beam—Stresses due to torsion—Angle of twist—Combined bending and torsion—Work done in torsion

CHAPTER II

Metals—Definitions—Behaviour of metals in tension—Elastic or proportional stress limit—The yield point—Visual methods for determining yield point—The yield ratio—Elongation of specimen: ductility—Sizes of tensile test pieces—Reduction of area—Extended strain scale—Stress-strain values for alloy steel—Materials with indefinite yield points: proof stress—Total deformation of specimen—The four-point method for proof stresses—Yield strength—The Beaumont proof-stress indicator—Behaviour of typical metals in tension—Tensile tests on non-ferrous metals—Ductile materials in compression—The modulus of elasticity—Notes on the elastic modulus—The modulus of rigidity—Utilization of tensile test results: the quality factor—Time influence in tensile tests—Hysteresis—Effect of temperature on recovery of elasticity—Annealing—Local hardening effect of shearing and punching—Effect of drilled holes in plates—Effect of shape of test piece

CHAPTER III

Cast iron—Mechanical properties of typical cast irons—Effect of temperature on tensile strength—Shearing strength of cast iron—Testing of cast iron—Effect of dimensions on strength of cast iron—The British Standard test method for grey cast iron—Modulus of rupture—Notes on the transverse test—Cast-iron piston rings—Practical tests of cast iron rings

CHAPTER VIII

CHAPTER IX

CHAPTER X

CHAPTER XI

CHAPTER XII

Shackles and grips—Notes on the use of wedge grips—Pure compression difficulty—Shearing tests—Cable grips—Fabric grips—Autographic stress-strain recording apparatus—Extensometers—Dial extensometers—Single-screw extensometer—The Lindley extensometer—The Hounsfield extensometer—The Olsen adjustable extensometer—Electronic high magnification recorder—A mirror extensometer—The Olsen compression micrometer—Bauschinger's extensometer—Unwin's extensometer—Ewing's extensometer—The Cambridge extensometer—Calibration of extensometers and strain gauges—Strain meters and gauges—A linear movement amplifier—A bending test indicator—The Cambridge scratch extensometer

CHAPTER XIII

Torsion test machines—The Buckton torsion testing machine—Avery-Buckton torsion test attachment—Measuring torsional strains—A mirror torque meter—Wire testing machines—Cable testing machines—Chain and wire rope testing machines—Transverse testing machines—Spring testing machines—Cement testing machine—Fabric testing machines—Tool steel testing machine—A file testing machine—Bending test machine for tool steels—Brake-lining friction testing machines—Wear resistance—Deductions from wear tests—Typical abrasion testing machines—The Avery-Brownsdon wear and lubricant testing machine—The Amsler abrasion testing machine—Machines for testing bearing metals and oils

CHAPTER XIV

Available non-destructive methods—Nature of defects—Acoustical crack detection methods—Magnetic methods of crack detection—Demagnetizing inspected parts—Limitations of magnetic crack detection method—Crack detection in non-magnetic materials—Crack detection appliances—Mass-production inspection—Magnetic methods of inspecting steels—Magnetic-inductive weld testing method—Bar and tube testing method—Radio-frequency crack detector—X-ray method of examining materials—Properties of X-rays—Utilization of X-ray penetration effects—Penetration distances—Some photographic considerations—Exposure times—Planar radiography—X-ray equipment—Automatic inspection machines—Industrial applications of the X-ray method—Castings—Welded joints—Visual examination of specimens—Radium or gamma ray inspection—X-ray crystal analysis—X-ray powder and universal cameras—Information revealed from X-ray patterns

CHAPTER XV

CHAPTER XVI

APPENDIX I

APPENDIX II

APPENDIX III

APPENDIX IV

APPENDIX V

ENGINEERING MATERIALS

THE TESTING OF MATERIALS

CHAPTER I

STRESS, STRAIN, AND ELASTICITY

When a structure of any kind, such as a machine, engine, bridge, or similar object, is loaded in any manner—that is to say, when it is subjected to the action of forces—the various members, or parts, of the structure are said to be *stressed* under the influence of the loads. As will be seen later, the stresses caused may be of various kinds, such as tensile, compressive, or shearing, or a combination of two or three of these.

In order to determine the proportions, or the suitability of the structure to withstand the loads, it becomes necessary to know two things, namely: (1) The amount and nature of the stress in each member; and (2) the properties of the materials of which the members are composed.

The former requirement necessitates a knowledge of the methods of analysis and of calculation in order to determine the nature and amount of the forces or stresses in the members and the changes of form occurring under the influence of the forces; this portion of the subject is treated of in textbooks on the Strength of Materials.

The second aspect of the subject deals with the mechanical and physical properties of materials as determined by experience and experiment, and with the processes of treatment of the materials; it is known as the Properties of Materials.

The two subjects are to a certain extent interconnected, since the properties of the materials of structural members determine the degree and nature of the deformation under load, and in many cases the deformation governs the values of the stresses in the members. Examples of this co-relationship may be seen in the case of ferro-concrete, composite structures of dissimilar materials, structures comprised of members having different factors of safety and subjected to different types of stress. Moreover, materials such as different kinds of metals, metals of varying structures but of the same composition, timbers, fabrics, etc., behave in a very different manner under load; the particular properties of each material when subjected to loading are the principal factors in strength calculations.

For determining the dimensions of any member of an engineering or aircraft structure it is not alone sufficient to know the strength properties under different kinds of loading, but also, in many cases, the endurance of the materials under fatigue, impact, temperature, abrasion, weathering, and other conditions.

Experimentally Determined Stresses

Many cases occur in practice in which not only the values but also the nature of the stresses in particular structures cannot be estimated by known analytical methods, or can only be estimated upon uncertain assumptions, so that it becomes necessary to have recourse to methods of experiment in order to determine the stresses.*

In many instances, it is possible to test full-sized structures, members, or bodies, to destruction, making careful measurements of the deformations, loads, and manner of failure under conditions resembling those of actual practice; the information obtained is usually an invaluable guide in apportioning the final structure, member, or body.

Testing machines, such as those described in Chapter XI, although intended primarily for testing the properties of the materials themselves, are often suitable for testing full-sized components; for example, automobile wheels and spokes can be crushed, aeroplane struts crippled, bracing wires, rods, and chains pulled apart, and engine members, such as connecting-rods, crankshafts, gear-wheels, and similar parts subjected to stress, tested to destruction.

A typical example of a huge testing machine for tensile and compressive tests upon full-sized members of engineering structures, or upon complete structures made within the dimensions of the machine, is that of Tinius Olsen & Co., shown in Fig. 1. Other examples are given in Chapter XI.

Many structures are either too large or would require special testing machines of an elaborate kind to test them to destruction, but in all such cases the behaviour under their own systems of loading can be ascertained, either by loading them directly, or, if this method is prohibitive for reasons of cost and inconvenience, scale models may be made and tested under similar conditions of loading.

It is, of course, necessary to know the laws governing the application of model results to the full-sized structure; many examples have occurred, in the past, of models working satisfactorily, whereas

---

* Alternative methods for finding the stresses in a loaded body or structure are given in Chapter XVI.

the full-sized machine structures made from these models were failures.

Thus, supposing, for example, it is found that a wire of diameter

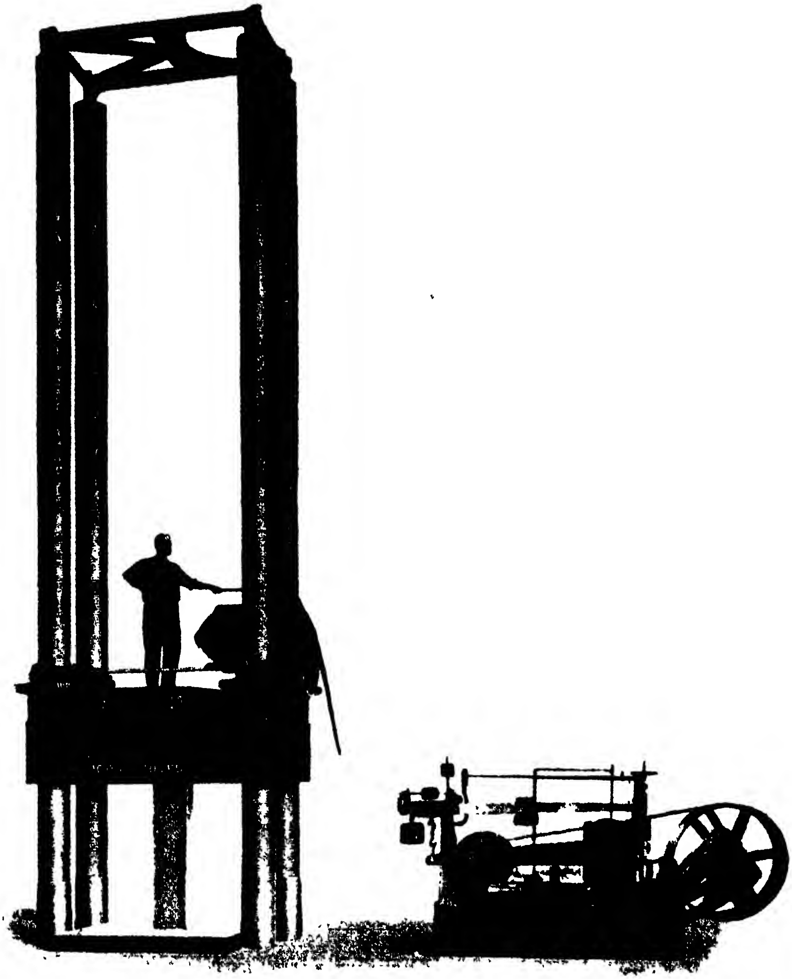

Fig. 1. The Olsen 10,000,000 lb. Testing Machine for Full-scale Tests of Structures and Parts

d will support a spherical (or, indeed, any other shape) of weight of diameter *D* quite safely. Next, suppose that a wire of ten times the diameter *d* is taken and that a weight of ten times the diameter *D* (or the linear dimensions) is hung upon it.

The tensile stresses in the two cases will not be the same, but as 1 is to 10, owing to the fact that the weight varies as the cube, whereas the cross-sectional area varies as the square, of the linear dimensions.

In all structures* in which the whole, or part, of the stresses is due to the weight of the structure itself, the stresses will be greater for larger structures of similar shapes; it may here be mentioned that the ultimate or maximum span† of cantilever and other bridges and similar structures is limited by weight considerations, and that each design of structure has a definite limiting size for a given working stress and material. The increase in this "limiting" value is only possible by employing materials of greater strength-weight ratio.

In the case of machines in which the accelerating forces are the limiting factors (as, for example, in the case of petrol and other high-speed reciprocating engines), these forces are proportional to the linear dimension d, the mass d^3, and the square of the speed, or revolutions per second, N^2—that is, to the product of d^4N^2. The bending moments in similar machines at the same places will be proportional to d^5N^2, and the stresses to d^2N^2. Hence in similar machines, if the accelerating force stresses are to be the same in value, the product d^2N^2 must be the same; that is, the speed must decrease as the size increases, or revolutions per minute should vary inversely as the linear dimension.

In aeronautical structures the loads governing the working stresses are in most cases due to the relative air speeds, as well as the total weight; and it is, therefore, necessary to test such structures under similar conditions of air-pressure, resistance, and weight. A common test for smaller machines of standard quantity production, or new, type, is to place the machine upside down upon trestles under the centre section portion and to load the wing and tail surfaces with bags of sand or shot, under approximately the same load distribution as that occurring in flight. The resistance effect is also approximated to, by means of horizontal cables pulling upon the wings.

The factor of safety, in such cases, is given by the difference between the total breaking load and the wing structure weight, divided by the machine's flying weight. The methods of calculating the stresses in girder structures, such as bridges, built-up beams, aeroplane wing and body-bracing systems, and other similar structures, are usually based upon the methods of continuous beams and pin-joints.

The former method assumes that the points of support of the flange members or rails are in the same line, or in a definite disposition; any subsequent deflection or movement of the supports appreciably

---

* In all weight-loaded structures, such as beams, the stresses in similar designs vary directly as the linear dimensions.

† An example of limiting bridge span is given by the case of the Firth of Forth cantilever bridge for the type of steel used.

alters the values of the stresses. The pin-joint method assumes that the junctions of various members are frictionless pin-joints and the forces in the members are estimated accordingly; in practice, the joints are usually rigid, and, as in the case of an aeroplane wing-span or longeron, members are often continuous through the "joints." The forces, due to rigidity and continuity of the joints, are appreciably different from those deduced from the pin-joint method. Here, again, experiment comes to one's aid, and the necessary corrections for rigidity and continuity can be determined by loading a scale model of the structure to the elastic limit, or breaking point.

Numerous other examples might be cited, but the above cases will serve to emphasize the importance of experimental tests and verifications; reference is also made in Chapter III to certain indirect experimental methods of determining the stresses and strains in loaded bodies and structures.

Stress

When two bodies, or parts of the same bodies, transmit, or are subjected to, a force, the equal and opposite action and reaction which occurs between the two bodies, or parts, constitutes a *stress*.

The interaction, or mutual reaction, which takes place between the two parts of a body, divided by an imaginary surface, is said to constitute a *state of stress*.

Thus, in the case of a strut, under compression, if any imaginary cross-section be considered there is a mutual push between the parts lying upon opposite sides of this section, and a state of stress exists there.

A stress acting at a surface is distributed over it, either uniformly or otherwise. If uniformly distributed each unit of area of the surface bears the same load, or is subjected to the same force, and the ***intensity of stress*** at any point is obtained by dividing the whole load, or force, by the whole area of the surface.

If A represents the whole area, and P the total force, then for a uniformly distributed stress the intensity is given by—

$$\frac{P}{A}$$

If the distribution of stress is not uniform the intensity of stress at any particular place may be found, very approximately, by dividing by any small area around the point the force upon that small area.

Thus, if δA represents a small area around any point on a surface at which a state of stress exists, and δP is the force upon that area, then the intensity of the stress at that point is—

$$\frac{\delta P}{\delta A}$$

If P is given in pounds or tons, and A is in square inches, the intensity of stress will be in pounds per square inch or tons per square inch, respectively.

For example, if a weight of 3 tons is hung upon the lower end of a uniform rod of 1½ in. diameter, the intensity of the stress produced across any section will be given by—

$$p = \frac{P}{A} = \frac{3}{\frac{\pi}{4}(1\frac{1}{2})^2} = \frac{3}{1{\cdot}766} = 1{\cdot}70 \text{ tons per sq. in.}$$

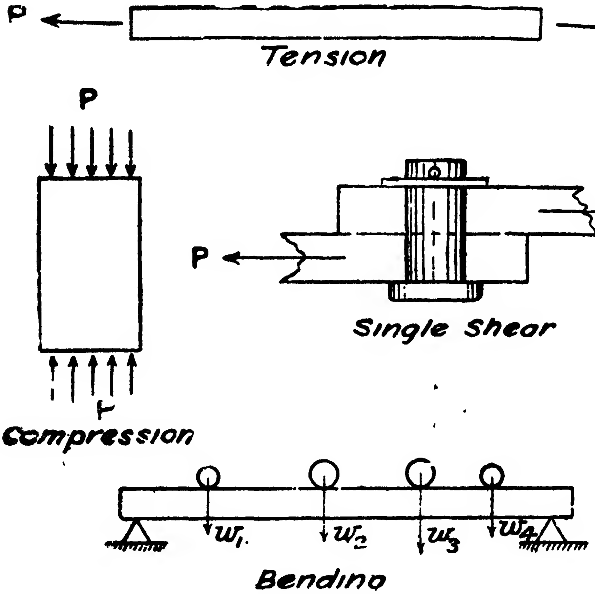

Fig. 2. Illustrating Types of Mechanical Stresses

Types of Stress. There are three principal kinds of stress which can occur—namely, tensile, compressive, and shear—of which the former two are known as simple stresses, and occur normally to the surface, whilst the latter stress occurs along the surface, or tangentially.

When the normal stress consists of a pull, the stress is a tensile one, and the portions lying upon the two sides of the surface tend to recede directly from each other.

When the stress is a push, the stress is compressive, and the two portions tend to approach.

Shear stress exists between two parts of a body when they exert equal and opposite forces upon each other in a tangential direction; it tends to make one part slide over the other.

Besides the above three types of stress, a body may be subjected to more than one type of stress; in this case the stress is termed a complex one. Every complex stress can be split up into simple component stresses.

Examples of the different types of stress considered are illustrated diagrammatically in Fig. 2.

Strain is a technical term used for expressing the change of form or shape produced by stress.

Tensile strain, caused by a tensile stress, consists of an elongation in the direction of the pull, accompanied by a lateral contraction perpendicular to the direction of the elongation.

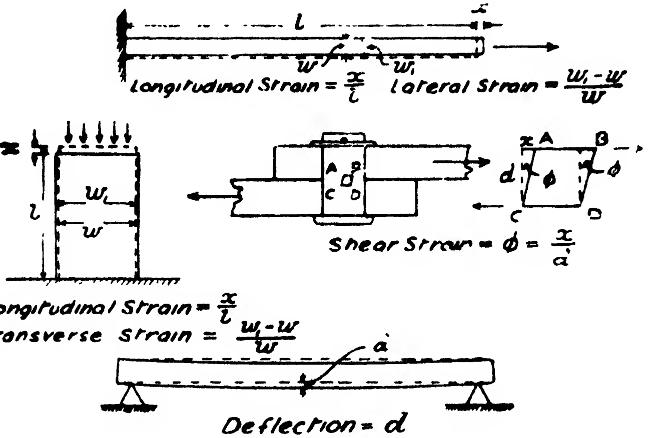

FIG. 3. ILLUSTRATING TYPES OF MECHANICAL STRAIN

Compressive strain consists of a shortening or contraction in the direction of the push, accompanied by a lateral bulging or expansion in all directions at right angles to the former. If x denotes the longitudinal change in length, upon a specimen of original length l, then the ratio $\frac{x}{l}$ measures the strain produced, whether tensile or compressive.

Shear strain consists of a tangential sliding of the parts under shear stress, in their direction. It is usually measured by the angle ϕ, shown in Fig. 3.

Elastic Materials. Hooke's Law

An elastic material is one for which the strain disappears when the stress is removed. Most materials, such as metals, timber, glass, and similar substances, are very nearly perfectly elastic for small stresses up to a limiting value for each material.

For example, in the case of mild steel, the material is elastic for stresses up to about 0·60 of the stress which would completely break or rupture the material, i.e. the "ultimate stress," or "tensile strength."

This limiting value of the stress, at which elasticity just ceases, is known as the *Elastic Limit.* Above this value of the stress the strain produced will not disappear when the stress is removed; the strain is then termed a *Permanent Set.*

The elastic limit varies for each material, and is more sharply defined in some cases than in others; thus in the case of mild steel, the elastic limit is readily discernible from the fact that the strain increases more rapidly for a given stress increase above this limit. For cast iron, copper, and aluminium, there is no true elastic limit and the stress and strain increase nearly at the same rates right up to the breaking point, which is fairly sudden. Fig. 4 represents graphically the relation between stress and strain for mild steel. It has been found that for elastic materials stressed within the elastic limit, *the strain is proportional to the stress producing it.* This is known as Hooke's law. For the case of a simple tensile stress, if a given pull causes a certain longitudinal extension, then twice this pull will cause twice this extension, three times the pull three times the extension, and so on, provided that the total pull does not cause the stress to exceed the elastic limit.

Mathematically, Hooke's law may be expressed in the following form, for either tension or compression, namely—

$$\frac{x}{l} = \frac{1}{E} \cdot \left(\frac{P}{A}\right) = \frac{p}{E}$$

where l = original length of the piece, x the change of length due to a load P, and A the cross-sectional area. $p = \frac{P}{A}$ is the stress, or force per unit area.

E is a constant, which is known as the Elastic, or Young's, Modulus, and its value depends upon the particular material under consideration; this constant may be defined as the ratio of longitudinal stress to strain.

Thus $$E = \frac{p}{e} \text{ where } e = \frac{x}{l} = \text{the strain}$$

If the stress be given in tons or pounds per square inch, then the Elastic Modulus should be expressed similarly. The units for $\frac{x}{l}$, the strain, are immaterial, since it is a ratio, but they must be consistent for both x and l, e.g. both in inches.

For iron and steel E is about 13,000 tons per sq. in. or about

30,000,000 lb. per sq. in. Thus a stress of 1 ton per sq. in. will produce an extension or contraction of $\frac{1}{13000}$ of the original length in the case of iron or steel.

The working stress for mild steel under steady load conditions is about 7 tons per sq. in.; the strain produced by this stress will be $\frac{7}{13000}$, or about $\frac{1}{1900}$ part of an inch, per inch length of specimen.

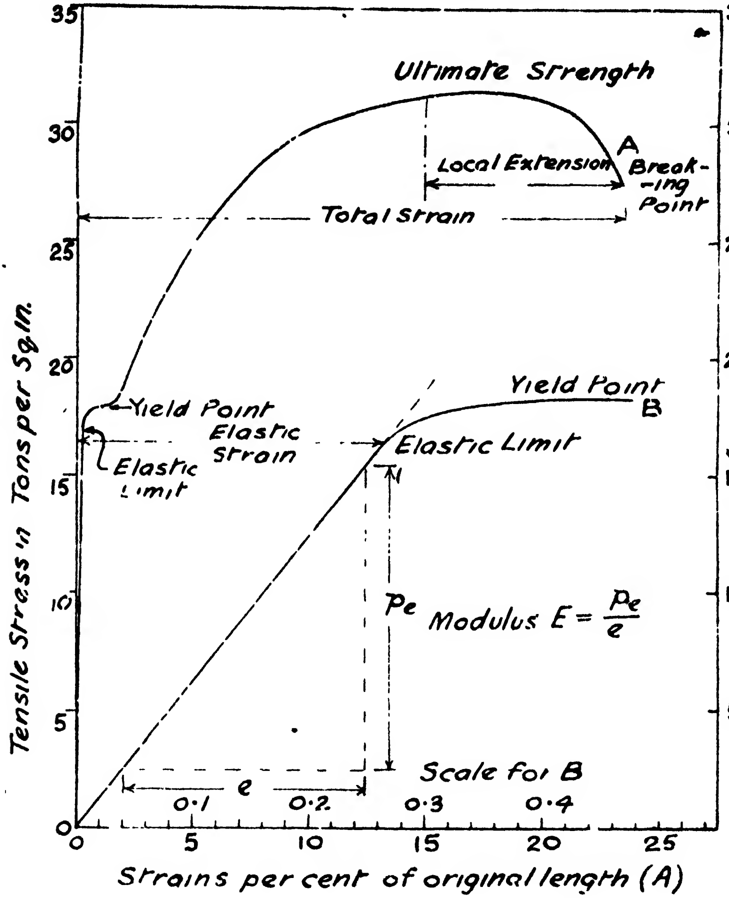

Fig. 4

It will be seen, then, that the elastic strains occurring in engineering work are very small indeed.

In the case of many metals which do not have definite elastic limits it is usual to consider their Proof Stress values.*

---

* *Vide* page 59.

TABLE 1

MODULI OF ELASTICITY AND RIGIDITY

	Modulus of Elasticity Tons per sq. in.	Modulus of Rigidity Tons per sq. in.
Wrought iron	12,000 to 13,000	5,000 to 6,000
Cast iron	6,000 to 8,500	2,250 to 3,500
Carbon steels	12,700 to 14,000	5,350 to 5,500
Nickel steels (3 to 4 per cent)	12,700	5,000
Nickel steels (30 to 35 per cent)	10,550	4,200
Copper (rolled)	6,700	2,500
Copper (annealed)	7,150	2,700
Phosphor bronze	6,700	2,500
Brass	5,000 to 6,000	2,000 to 3,000
Aluminium (rolled)	4,000 to 4,500	1,700 to 1,800
Lead	1,120	390
Tin	3,500	1,340
Nickel	13,100	5,000
Monel metal	11,610	4,460
Glass (flint)	3,200 to 3,900	1,300 to 1,750

Stress and Strain Conditions in Actual Metals

It is appropriate at this stage to draw attention to certain discrepancies that exist between the ideal elastic materials which are assumed in engineering calculations and the metals actually used for engineering stress-bearing structures, in so far as steady loading conditions are concerned.

Most of the formulae given in this section are based upon the following assumptions, namely—

(1) That Hooke's law is true.

(2) That the material is homogeneous, continuous, and capable of indefinite division, each successive piece having the same properties as the larger piece; further, it is assumed that there are no internal flaws or defects.

(3) That the material is isotropic, i.e. it is equally stretchable or compressible in all directions.

The pure metals are seldom used in engineering construction, since their alloys possess far better physical and mechanical qualities. These alloys usually consist of minute crystals cemented together with metallic compounds, and are therefore not homogeneous and continuous in the sense of the assumed perfect elastic material of Hooke's law. Some idea of the complex structure of modern constructional steels will be gathered from the examination of prepared sections* under a high-powered microscope. Even in the case of the

---

* Typical photomicrographs of steels are given in Chapter I, Vol. I, of this work.

so-called pure commercial metals the structure is crystalline and there are usually minute slag and other foreign matter inclusions.

Thus, when a tensile load of, say, P tons is applied to a rod of cross-sectional area A sq. in., whilst the average stress over the area A is assumed to be P/A tons per sq. in., in actual fact, owing to the crystalline formation and possible existence of tiny slag inclusions, the stress may vary over the cross-section from crystal to crystal. In this connection, some idea of the possible interior stress variation is shown in Fig. 5,* in which the lower illustration depicts a crystalline metal structure, with inclusions depicted by the black areas. The corresponding stress values along the section AB are shown in the upper diagram by the thin wavy lines, whilst the average, or P/A, stress is shown by the thick line at a height OM above the zero stress line at O. It will be seen that individual crystal or boundary stresses may reach much higher values, such as that at N, and others may reach lower ones. Where minute non-metallic inclusions or holes exist, still higher localized stresses will occur. Thus, the average or P/A stress may be considerably lower than the localized stresses in the crystalline layers.

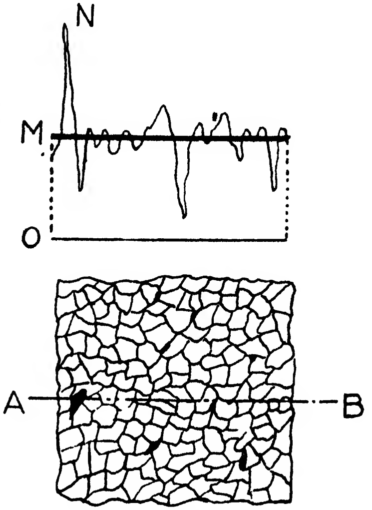

FIG. 5. ILLUSTRATING STRESS INTENSITIES FOR CRYSTALLINE METAL

Again, it is known from both experimental evidence and mathematical analysis that if a tensile test piece in the form of a plate has a hole drilled through it, when tension is applied the stress at the edge of the hole may be two or three times that of the average or P/A value. The stress at the root of a screw thread, under tension, is usually from three to four times the average value over the whole section; or, again, in the case of a shaft having a keyway the localized stress at the root of the latter is considerably higher than the average value.

Despite the existence of these higher localized stresses, the ordinary P/A formula can be employed without misgivings, since it represents the general behaviour of a large group of crystalline grains of metal, although not true for individual grains. For ductile materials under steady—as distinct from varying—loads, the P/A formula can therefore be applied to determine the working loads in engineering structures,

---

* "Fatigue Failure of Metals," H. F. Moore, *Journ. Frank. Inst.*, Nov., 1926.

although in special instances, namely, where sudden changes of section occur—as in the case of rivet holes and keyways—some caution may be necessary in individual examples. It may be added that owing to its flow qualities a ductile metal is able to adjust itself to a certain degree when subjected to steady tensile or compressive stresses. This is not the case, however, with brittle metals, such as cast iron, so that the effects of local higher stresses, such as those around rivet holes, become more serious, even under dead loads.

In regard to the methods of evaluation of stress distribution in complex cases, e.g. drilled plates, crane-hooks, keyway shafts, etc., whilst it is sometimes possible to predict the values of the stresses by application of the mathematical theory of elasticity of St. Venant, Navier, and others, it is usual to employ purely experimental methods such as the photo-elastic light one of Coker* or the soap bubble one of Griffiths.

Slip Bands in Metals

With the knowledge that all engineering metals are crystalline in structure, the application of a stress to a ductile material is such that, as mentioned in the preceding section, certain crystals are subjected to higher localized stresses and such stresses will exist around non-metallic inclusions and minute air holes. As a result there will be a tendency, locally, for the crystals to slip. When a stressed metal is examined under a high-powered microscope it will be found to show a series of parallel hair lines, which are known as *slip lines* or *slip bands*. The occurrence of such slip causes a kind of work-hardening of the material. In certain metals the yield or strain will cause large-scale markings, which have been termed *stretcher strains*. The phenomenon of slip may be illustrated by the analogy of a pack of cards under compression p and subjected to a slightly oblique endwise pressure L as shown in Fig. 6. The cards would yield in an endwise direction and an end view would show a series of steps, whilst the side view would reveal the slip lines between the cards. If the cards are slipped repeatedly their surfaces become roughened and offer an increasing resistance to slip.

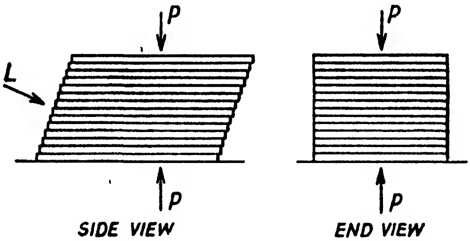

FIG. 6

As it occurs in metals, crystalline slip in some instances is beneficial

---

* *Vide* Chapter XVI.

in strengthening the planes of weakness within a crystalline grain. Thus, in ductile metals a small degree of slip usually brings about an adjustment which results in a lowering of the value of high localized stresses and a general strengthening of the atomic bonds.

Slip occurs even at low stress values well within the elastic limit, but the number of grains affected is a very small proportion of the total so that the corresponding strain is too small to be detected even by the use of an extremely high precision extensometer. When the elastic limit is reached, however, the slip becomes more pronounced and is readily measurable.

Transverse Strain

The lateral or sideways contraction of a member, or specimen, under tensile stress is a definite proportion of the longitudinal strain. The ratio $\frac{\text{transverse strain}}{\text{longitudinal strain}}$ is known as Poisson's Ratio, and is usually denoted by σ; for metals its value lies between $\frac{1}{3}$ and $\frac{1}{4}$.

TABLE 2

VALUES FOR POISSON'S RATIO

Material	*Value of Poisson's Ratio*
Mild steel	0·29
Wrought iron	0·27
Cast iron	0·25
Brass (cast)	0·33
Copper (cast)	0·33
Glass (flint)	0·24

Hooke's law for shear stress and strain may be written symbolically as—

$$\frac{\text{shear stress}}{\text{shear strain}} = \frac{q}{\phi} = C,$$

where C is a constant for each material, and is known as the *Modulus of Rigidity*. Its value, which is usually determined by torsion experiments, is usually about two-fifths of the Elastic Modulus.

Bulk or Volume Modulus

When a solid is subjected to three simple pushes, of equal intensity applied in three directions, if the material is isotropic or homogeneous* —that is to say, has equal properties in all directions—it suffers a contraction of volume only.

If the change of volume is v, due to three simple stresses of intensity

---

* A material having unequal properties in different directions, such as timber, is said to be heterogeneous; certain of the crystals belong to this class.

p, acting in three directions, mutually at right angles, and V is the original volume, then, within the elastic limit, the volumetric strain is proportional to the stress p—that is to say—

$$\text{Volumetric strain} = \frac{v}{V} = \frac{p}{K}$$

where K is a constant known as the *Bulk* or *Volume Modulus.*

The linear strain will be—

$$\tfrac{1}{3}\frac{v}{V} = \frac{p}{3K}$$

The value of K may be determined experimentally by measuring the volume change when the body is placed in a liquid to which pressure is applied, or it may be estimated from the other elastic constants, from the relation given in the next paragraph.

TABLE 3

VALUES OF BULK MODULUS K (Pounds per square inch)

Material	*K*
Water	320,000
Mercury	7,850,000
Glass (flint)	4,950,000 to 5,900,000
Brass	14,300,000 to 15,500,000
Copper	24,000,000
Cast iron	13,700,000
Wrought iron	20,700,000
Steel	25,200,000

Relation between Elastic Constants

It can be shown, analytically, that E, C, and K are related in the following manner—namely—

$$\frac{1}{E} = \frac{1}{3C} + \frac{1}{9K} \quad \text{or} \quad E = \frac{9KC}{3K + C}$$

For the transverse contraction, where σ denotes Poisson's Ratio—

$$\sigma = \frac{3K - 2C}{6K + 2C}$$

For a material such as rubber, in which the longitudinal extension is great compared with the lateral contraction (rubber extends readily, but is compressed with difficulty), the value of σ will be much smaller than in the case of a metal. The limiting value of σ will be seen to be $\tfrac{1}{2}$; it cannot be greater than this.

Another useful relation between the constants is—

$$C = \frac{\sigma E}{2(\sigma + 1)}$$

Work Done in Elastic Strain. Application to Springs, etc.

For simple tension, or compression, in the case of an elastic material, the work done per unit area, per unit length, is given by—

Work done per unit volume $= w =$ mean stress × strain

$$= \frac{p}{2} \cdot \frac{x}{l} = \frac{p^2}{2E}, \text{ for } \frac{p}{E} = \frac{x}{l}$$

The quantity $\frac{p^2}{2E}$ (termed the *Resilience*) measures the capacity for storing work in consequence of the strain, and this energy can be restored when the strain is relaxed.

Thus in the case of metal springs the most suitable materials are those having the highest resiliences, or values $\frac{p^2}{2E}$, under working stress conditions. Since the value of E is practically constant for similar engineering metals, it follows that the best material for tension, compression, or beam type springs, from the weight and bulk point of view, is that having the highest elastic limit, or working stress. The alloy steels, such as chrome-vanadium, silico-manganese, manganese-chrome, and nickel-chrome, are the best for this purpose.*

India-rubber, for its weight, can store up considerably more energy than any other commercial material. Thus for hardened cast steel the working resilience per cubic inch is about 500 in.-lb., and for good india-rubber it is about 200 in.-lb. The relative weights per cubic inch are as 8¼ to 1, and the respective resiliences for india-rubber and steel, in foot-pounds per pound weight, are roughly 500 and 150.

The work done per unit volume, in *elastic shearing action*, is given by—

$$\frac{q^2}{2C}$$

The work done by a load upon a given structure is equal to the product of the load and the deflection of the structure in the direction of the load; this work done must also be equal to the sum of the strain-energies (as defined above) of the members comprising the structure.

This principle is a valuable one in connection with the determination of the stresses in complex structures, and has been applied to such examples as aeroplane wing bracings with different deflections at different places along the spars, bridge-trusses, and redundant frames; the method is known as the Strain-Energy one. It is, however, outside the scope of the present volume to discuss problems which rightly belong to the subject of the strength of structures.†

---

* Full particulars of spring materials are given in Vol. I of this work.

† For fuller information, the reader is referred to *The Theory of Structures*, by Professor A. Morley, Chap. XIV, "Deflection and Indeterminate Frames."

TABLE 4

RESILIENCES OF DIFFERENT MATERIALS. (Perry)

Material	Tension			Compression			Shear		
	f_t Pounds per Square Inch	$E \times 10^6$ Pounds per Square Inch	$f_t^2/2E$ Inch Pounds per Cubic Inch	f_c Pounds per Square Inch	$E \times 10^6$ Pounds per Square Inch	$f_c^2/2E$ Inch Pounds per Cubic Inch	f_s Pounds per Square Inch	$C \times 10^6$ Pounds per Square Inch	$f_s^2/2C$ Inch Pounds per Cubic Inch
Cast iron . . .	3,500	14–23	3	10,500	14–23	12	2.700	5·0–7·6	5
Wrought iron . .	24,000	29	10	24,000	21	10	20,000	10·5	19
Mild steel . . .	35,000	30	20	35,000	21–25	15	26.500	11	32
Mild steel, hardened .	70,500	30	83	—	—	83	53,000	11	128
Cast steel, unhardened .	80,000	30	107	—	—	—	64,000	11	186
Cast steel, hardened .	190,000	36	501	—	—	—	145,000	13	809
Copper . . .	4,300	15	0·62	4,000	17·1	0·5	2,900	5·6	0·75
Brass	6,950	9·2	2·62	6,500	15·3	1·23	5,200	3·4	4·00
Gunmetal . . .	6,200	9·9	2·00	6,000	15·0	1·30	4,150	3·7	2·33
Phosphor-bronze . .	19,700	14	13·85	20,000	14·0	14·3	14,500	5·25	20·0
Glass	4,500	8	1·26	10,000	5·8	8·6	—	3·3–3·9	—
Fir	10,000	1·5	5	6,000	1·5	1·3	—	0·1–0·7	—
Oak	14,500	1·3	4	10.000	1·3	3·85	—	—	—

Note.—f_t, f_c, and f_s are the tensile, compressive, and shear stresses at the elastic limits.

Table 4 gives the average values for the tensile, compressive, and shearing resiliences of the materials indicated; in each case the resilience is given in inch-pounds per cubic inch of the material.

Simple Stresses (Inclined Sections)

Consider the case of either a tensile or compressive force acting upon a piece of material. If the area of the cross-section AB, Fig. 7, be A sq. in., and the total pull or push be P lb., then the intensity of stress over AB is given by—

$$p = \frac{P}{A} \text{ lb. per sq. in.}$$

There is no tangential force along AB.

The intensity of the normal tensile force over any section CD, inclined at an angle θ to AB, for the case of two tensile pulls is given by—

$$f_t = \frac{P\cos\theta}{\frac{A}{\cos\theta}} = \frac{P}{A}\cos^2\theta = p\cos^2\theta$$

The maximum value of f_t occurs when $\theta = 0$, when $f_t = p$.

The tangential or shear stress over CD is given by—

$$q = \frac{P\sin\theta}{\frac{A}{\cos\theta}} = \frac{P}{A}\sin\theta\cos\theta = \frac{p\sin 2\theta}{2}$$

It will be seen that the maximum value of q, the shear stress, is $\frac{p}{2}$, and occurs when $\sin 2\theta = 1$ or $\theta = 45°$.

It is of interest to note that the planes of cleavage or fracture of certain metals in tension or compression are approximately at angles of 45° to the axis. The mutual frictional resistance due to the relative sliding of the surfaces somewhat modifies this angle, however.

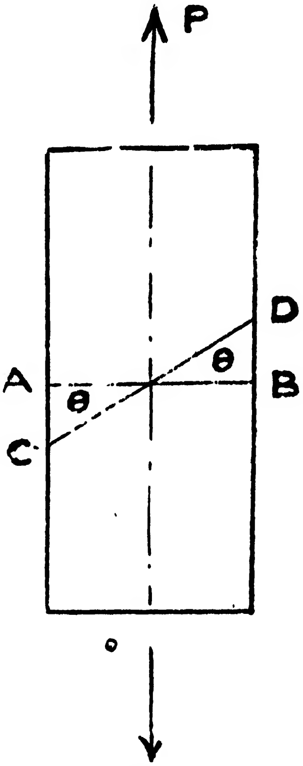

FIG. 7. SIMPLE TENSILE STRESS

Complex Stresses

When a body is subjected to forces causing normal or shear stresses in known directions—that is to say, when it is under a complex system of stresses—the effect caused will be exactly similar to that produced

by three simple tensile or compressive stresses acting in three directions mutually at right angles.

Each of these equivalent stresses is termed a "***principal stress***," and the planes normal to which they act are known as "principal planes," the directions of the stresses lying along the "*axes of stress.*"

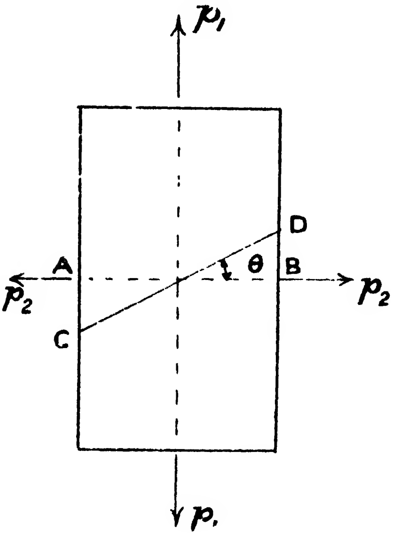

FIG. 8

One of the principal stresses at any given point in the body is always greater than any other stress at that point, irrespective of direction, and another of the principal stresses is always a minimum for all stresses at that point.

The state of stress across any plane can be found by algebraic addition of the components of the complex stresses along and normal to the plane.

(1) If a body be subjected to two simple tensile* stresses, acting in directions at right angles, as shown in Fig. 8, the stresses upon any inclined section *CD* will be as follows, namely—

$$\text{Normal stress } f_t = p_1 \cos^2 \theta + p_2 \sin^2 \theta$$

$$\text{Tangential stress } q = p_1 \frac{\sin 2\theta}{2} - p_2 \frac{\sin 2\theta}{2}$$

The maximum tangential stress occurs when $2\theta = 90°$ or $\theta = 45°$ and its value is $\frac{p_1 - p_2}{2}$, the corresponding value of the normal stress on *CD* being $\frac{p_1 + p_2}{2}$.

(2) **Simple Shear.** If, however, one of the forces is a push, whilst the other is a pull, then either p_1 or p_2 will be negative.

Calling tensile forces positive, and compressive ones negative, then the normal force upon *CD* becomes—

$$p_N = \frac{p_1 - p_2}{2},$$

and when $p_1 = p_2$ there is no normal force.

---

* The same reasoning applies to the case of compressive stresses.

The only stress to which CD is subjected will then be a shear stress of intensity equal to p_1 or p_2. Therefore a state of simple shear may be produced by two equal, but opposite in sign, principal stresses acting at right angles, and the intensity of the simple shear stress is equal to either of these, and occurs upon planes at 45° to the principal stress directions, as shown in Fig. 9.

It can also be shown that every tangential stress, no matter how it is originated, must be accompanied by an equal tangential stress acting along a plane at right angles to the other. Thus, if an indefinitely small cube $ABCD$ (Fig. 10), under the influence of shearing stress q, along parallel sides of the material, be studied, then a little consideration will show that no possible arrangement of normal stresses upon the faces of the cube can balance this shear-couple. This can only be balanced by an equal and opposite shearing stress q_2 along the sides of the cube at right angles to the other stress q_1.

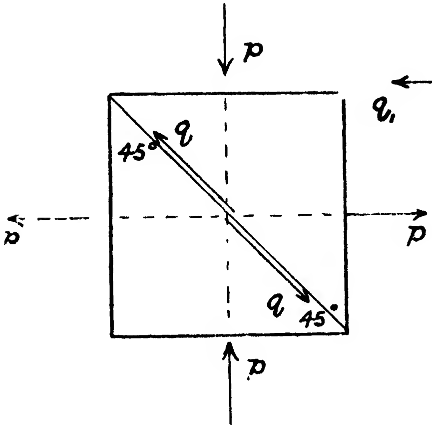

FIG. 9

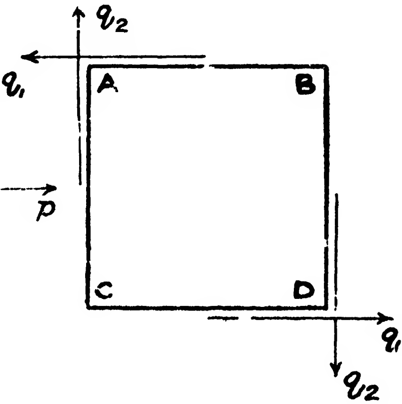

FIG. 10

Combined Normal and Shear Stresses

In connection with the stresses existing in beams, the case of a simple shear stress, and a normal stress of either compression or tension, occurs, as depicted in Fig. 11. It is required to find the resultant normal stress, equivalent to these stresses.

Considering indefinitely small horizontal and vertical sections, BC and AC respectively, let p be the intensity of the normal stress, and q that of the shear stress perpendicular to AB, and along CB respectively. As previously shown, the shearing stress q along CB will be accompanied by an equal shearing stress q along AB.

If *AC* be the plane perpendicular to which the resultant stress r (the magnitude and direction of which it is required to find) acts, then the conditions for equilibrium can be obtained by taking resolutes along *AB* and *BC*, and may be expressed as follows—

$$(r - p) \cos \theta = q \sin \theta$$

$$q \cos \theta = r \sin \theta$$

Whence $$\tan 2\theta = \frac{2q}{p}$$

and $$r = \frac{p}{2} \pm \sqrt{q^2 + \frac{p^2}{4}}$$

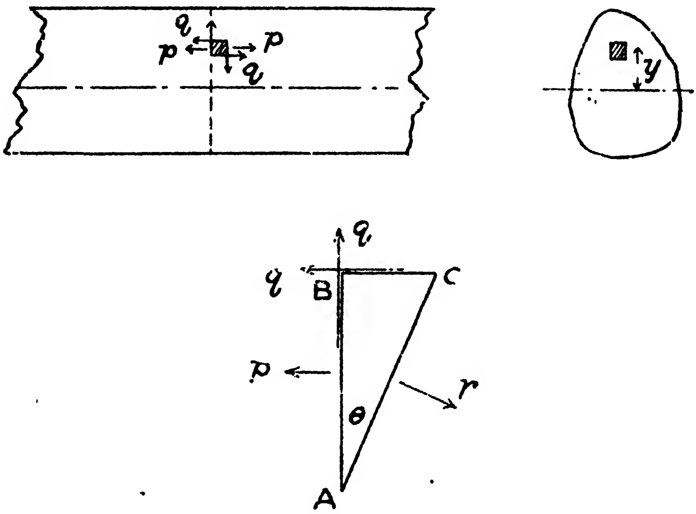

FIG. 11. STRESSES IN BEAMS

The maximum, or principal, stress is given by the positive root value, and the minimum stress by the negative value. It will be seen that these two resultant stresses act on planes, mutually at right angles.

It also follows from what has already been shown, that the maximum shearing stress values act along planes inclined at 45° to those of the principal stresses; its value is—

$$\tfrac{1}{2}\sqrt{4q^2 + p^2}$$

The Stress Ellipse

A convenient graphical method of obtaining or representing the resultant stress on any plane of a body which is subjected to two principal or simple stresses (tensile or compressive) is illustrated in Fig. 12.

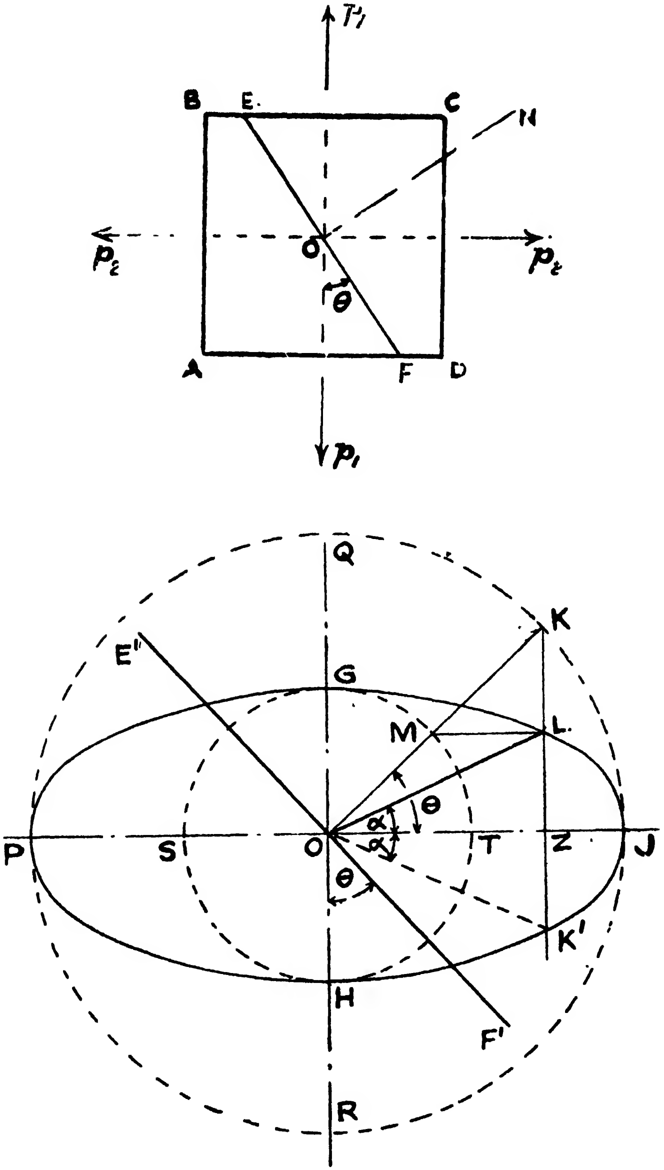

Fig. 12. The Stress Ellipse

In the upper diagram a body is supposed to be subjected to the action of two simple stresses, p_1 and p_2, as shown. The stress ellipse enables the magnitude and direction of the resultant stress upon any plane such as *EF* to be at once determined.

Let two concentric circles, *PQJR* and *SGTH*, be described with radii *OQ* and *OG*, respectively proportional to the simple stresses p_1 and p_2. Draw E^1F^1 parallel to the plane *EF* in the upper diagram, and *OK* perpendicular to E^1F^1. Draw KZK^1 perpendicular to *POJ*, and through *M* draw *ML* perpendicular to *QOR*. Then the point *L* lies upon an ellipse *PGJH*, and *OL* represents in magnitude and direction the resultant stress upon the plane E^1OF^1 due to the simple stresses p_1 and p_2. For any other inclination, a corresponding point such as *L* can be found by a similar construction, lying upon the stress ellipse, giving the corresponding resultant stress for that inclination.

If the simple stresses are unlike in sign—that is to say, if one is tensile and one compressive—then the dotted line OK^1 will represent the resultant stress.

More General Case of Principal Stresses

The case of a single normal stress and two equal shear stresses at right angles has already been considered on page 19.

It is now proposed to deal with the case of two normal stresses and mutually perpendicular equal shear stresses as shown in Fig. 13, in which *PQRS* represents a very small block of the material of unit thickness, subjected to two simple tensile stresses, p_1 and p_2, and to two equal shearing stresses of intensity q acting at right angles.

The directions of the principal planes and the values of the normal principal stresses are required.

If *EF* be a principal plane at θ to the direction of p_1, and if p be a principal stress on this plane, then the conditions of equilibrium of any small triangular wedge such as *ABC*, which has its sides parallel to the sides of the rectangular block and to *EF* respectively, will be as shown in the lower diagram of Fig. 13. It will be seen by resolving the stresses, equating, and simplifying, that—

$$\tan 2\theta = \frac{2q}{p_1 - p_2}$$

and

$$p = \frac{p_1 + p_2}{2} \pm \sqrt{\frac{(p_1 - p_2)^2}{4} + q^2}$$

The directions (θ) and magnitudes (p) of the principal stresses are thus determinate.

The planes *EF* and E^1F^1 of the principal stresses are at right angles, and the greater value of the principal stress corresponding to the positive root occurs on the plane EF, whilst the negative root value of p corresponds to the smaller principal stress occurring on the plane E^1F^1.

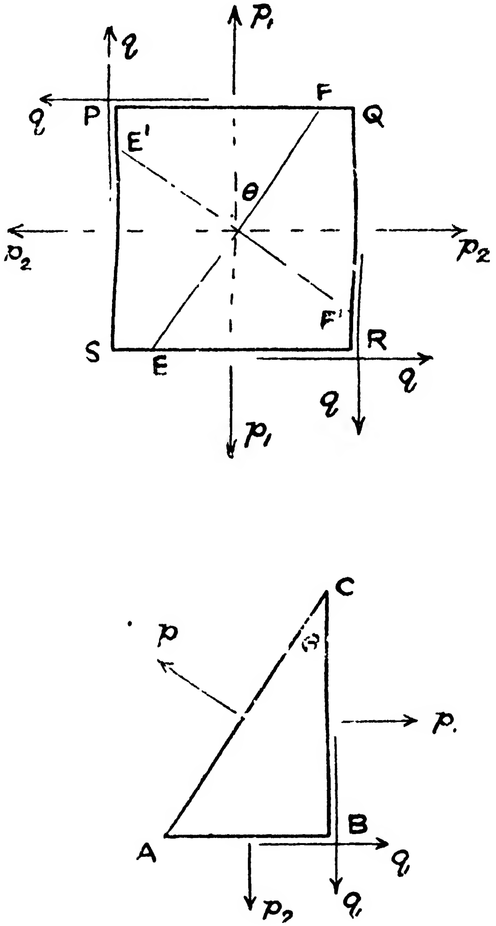

FIG. 13

The maximum shear stresses, as before, occur upon planes inclined at 45° to the principal planes, and the value of the maximum shear stress is—

$$q_m = p - \frac{p_1 + p_2}{2} = \sqrt{\frac{(p_1 - p_2)^2}{4} + q^2}$$

Properties of Beams

In the following considerations, the more important properties of beams will be briefly studied, from the point of view of the properties of materials, since many of the materials are employed in engineering applications in the form of beams; moreover, beam tests upon representative samples of certain materials, such as those of cast iron, timber, etc., form an important branch of the subject of testing materials.

A knowledge of the stresses and deformations of loaded beams is essential to a correct understanding of the properties of materials employed in the form of beams. In the following considerations, the principles, and results deducible from them, will be considered, in many cases without the analytical proofs.

Bending Moments and Shearing Forces

When a beam, loaded in any manner, is supported at one or more places, then the algebraic sum of all of the vertical load components to the right, or to the left, of the section considered, is termed the *Shearing Force*. Thus, in Fig. 14, representing a beam supported at each end and loaded irregularly, as indicated by the irregular area $NPMA$, if any section AB be taken, then the S.F. at this section will be given by the algebraic sum of the loads, say, to the left. If G denote the centre of gravity of the load, then the reactions of the supports at M and N respectively will be $W \cdot \frac{b}{a+b}$ and $W \cdot \frac{a}{a+b}$.

If w_1 denotes the load represented by the area MPA, then—

$$\text{S.F.} = W \cdot \left(\frac{b}{a+b}\right) - w_1$$

or taking the forces to the right of the section AB—

$$\text{S.F.} = -W \cdot \left(\frac{a}{a+b}\right) + (W - w_1) = \frac{W \cdot b}{a+b} - w_1$$

These forces, to the right or to the left, must of course be equal.

Consider next, the moments of each of the forces or loads acting about any section such as AB. The algebraic sum of the moments of the forces taken about the given section, to the right, or to the left, of the section, is termed the *Bending Moment* about that section (usually denoted by the letters B.M.).

Referring again to Fig. 14, let the distances of the C.G.'s of the loads MPA and PAN from the vertical line PB be denoted by c and d respectively, and the distances of the supports M and N from AB be denoted by x and y respectively.

Considering moments to the right of AB, first—

$$\text{Then the B.M. at } AB = -W\,.\left(\frac{b}{a+b}\right).\,x + w_1\,.\,c$$

or considering moments to the left—

$$\text{B.M. at } AB = -W\,.\left(\frac{a}{a+b}\right)y + (W - w_1)\,.\,d$$

Each of these expressions must be the same, since the beam is in equilibrium under the forces acting.

It is usual to define *positive shearing forces* as those which tend to *shear the right-hand portion* of the beam *upwards*, and *negative* for the *left-hand upwards*.

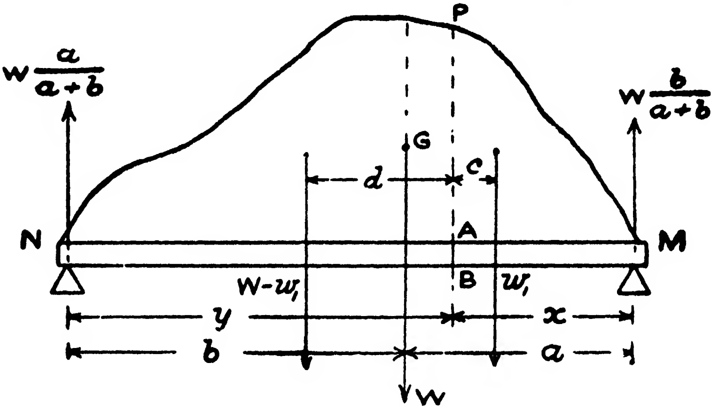

FIG. 14

Positive bending moments are those which tend *to bend the beam* in such a manner that it is *concave downwards*. It will be seen that this corresponds with an *anti-clockwise B.M.*, with the usual beam arrangement.

B.M. and S.F. Diagrams

If the B.M. be estimated at several places along the beam, and ordinates be set up proportional to the B.M.'s at these points, the curve formed by joining up the extremities of these points is known as the *B.M. Diagram*.

In the case of a number of isolated loads, it is only necessary to find the B.M. values at the points of application of the loads, and to join up the B.M. ordinates by straight lines.

A convenient method of constructing the B.M. diagram for the above case is to draw the B.M. diagrams for each of the loads separately, and then to add algebraically the respective ordinates, as shown in Fig. 15.

Typical examples of B.M. and S.F. diagrams are given in textbooks on the strength of materials and in engineers' pocket books, so that it is unnecessary to devote further space to this subject here.

The Stresses in Beams

A study of the internal stresses in the case of a loaded beam necessitates a knowledge of the B.M.'s and S.F.'s at all points along the beam; the methods of estimating these quantities have already been considered.

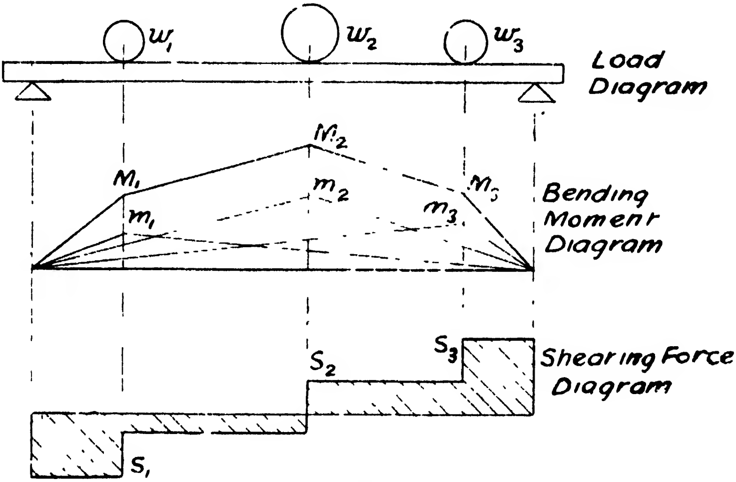

FIG. 15

A rough general idea of the stresses acting in a beam under load may be obtained by considering the case of a beam supported at its ends and loaded in the middle, as shown in Fig. 16.

It will be seen that the upper side tends to shorten, or compress, whilst the lower side tends to lengthen, or extend, under tensile action. There will evidently be one layer, situated near the centre of the beam, which neither extends nor compresses.

The axis of the section at which this effect occurs is termed the *Neutral Axis*, and the layer concerned the *Neutral Layer*.

An important property of the neutral axis is that it always passes through the centre of gravity of the section.

Consider next the two equivalent forces acting upon any section *xy* of the beam. If the beam be supposed cut at this section the dis-

positions of the forces preserving balance will be readily seen to be those shown in Fig. 16, and to comprise—

(1) A compressive force above the neutral axis, *C*.

(2) A tensile force below the neutral axis, *F*.

(3) A vertical shear force, *S*.

The moment of the couple due to the forces *C* and *F* is called the moment of resistance of the stresses acting, or of the section, and the following relation holds—

$$\left.\begin{array}{c}\text{Moment of resistance}\\ \text{of the section}\end{array}\right\} = \text{External B.M. at the section.}$$

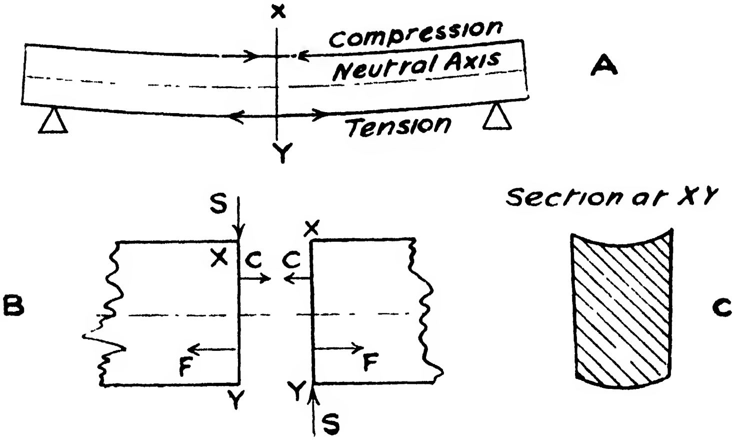

FIG. 16. STRESSES IN LOADED BEAMS

The Engineer's Beam Theory

It has been assumed that there are two equivalent tensile and compressive forces, *F* and *C* respectively, which resist the external B.M. due to the loading of the beam. Actually, however, there is a distributed stress over each part of the cross-section of the beam, the stress being tensile below, and compressive above. Moreover, the distribution of stress is such that it is zero at the neutral axis, and increases to maximum values at the furthermost parts of the section.

A valuable, yet simple, theory the results of which are widely employed in engineering design practice is based upon the following assumptions, viz.—

(1) That the material of the beam is perfectly elastic both in tension and in compression—that is to say, it follows Hooke's law—and also it has the same value of the Elastic Modulus (*E*) for both tension and compression.

(2) That a cross-section of the beam which is plane before is also plane after bending.

(3) That the limit of elasticity (or Elastic Limit) is not exceeded by any of the stresses. A certain amount of criticism has been based upon the failure of the engineer's beam theory to predict "breaking loads" and phenomena beyond the Elastic Limit; this is, of course, incorrect, as the assumptions upon which the theory is based apply only within the Elastic Limit.

(4) That every longitudinal layer is free to contract or extend under stress, either laterally or longitudinally, just as if the layers were separate.

(5) That the initial radius of curvature of the beam is very large compared with the dimensions of any cross-section.

One of the first consequences of these assumptions, more particularly of (1) and (2), is that the distribution of stress across the section obeys a linear law of variation—that is to say, it varies directly as the distance from the neutral axis. Thus, if $p =$ the stress (tensile or compressive) at any distance y from the neutral axis, then—

$$p = k \cdot y$$

where k is a constant depending upon the value of the B.M. and of the shape of the section. The value of the stress p at any given distance from the neutral axis will vary directly as the B.M., and inversely as the moment of inertia of the section

Stresses Across the Section of a Beam

The following formula is readily deducible from the previous assumptions, viz.—

$$p = y \cdot \frac{M}{I}$$

where $p =$ the stress at distance y from the neutral axis

$M =$ B.M. at the section

$I =$ Moment of Inertia of the section about the neutral axis

If M be expressed in *pounds inches*, I in (inches)^4, and y in *inches*, then the stress p will be in pounds per square inch.

If M be expressed in kilogramme centimetres, and I and y in centimetre units, then p will be the stress in kilogrammes per square centimetre.

From the point of view of material economy, which is an important one in automobile and aircraft design, it is desirable to design beam sections so that their moments of inertia, for a given depth, are as large as is practicable. This is effected by massing the material as far away as possible from the neutral axis.

The ratio $\frac{I}{y}$ is termed the *Strength Modulus** of the section, and it is a measure of the moment of resistance which the material of the section offers to bending—

for $$M = p \cdot \frac{I}{y}$$

Shear Stress in Beams

Hitherto, the normal tensile and compressive stresses due to bending only have been considered in detail, although it has been shown that a vertical shear stress must exist along any section.

This shear stress must be accompanied by an equal shear stress acting at right angles to it—that is, along the length of the beam.

Now the shear stress, as in the case of the normal stresses, is not uniform over any section; it can be shown, by analytical methods, to vary across the section, according to the shape of the section, being a maximum at the neutral axis, and a minimum at the outermost parts of the section.

The value of the horizontal and also the accompanying vertical shear stress at any distance from the neutral axis is given by—

$$q = \frac{S \cdot A \cdot y_0}{b \cdot I}$$

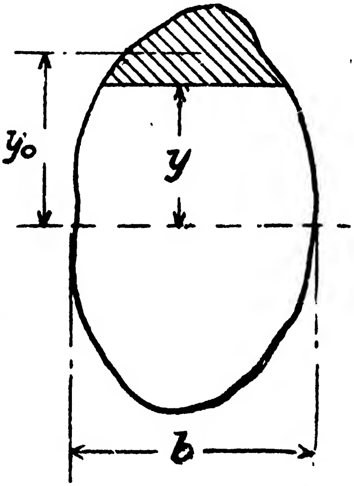

Fig. 17. Shearing Stress Intensity for Any Section of Beam

where S = total shearing force at the section,

A = area between the point of section at which q is considered and the outermost part of section. (This area is shown shaded in Fig. 17.)

y_0 is the distance of the C.G. of this area from the neutral axis, b = the breadth of section, and I = its moment of inertia about the neutral axis.

Consider the case of a rectangular section as shown in Fig. 18.

---

* Sometimes denoted by the symbol Z.

The shearing stress q at any plane situated at a distance y from the neutral axis is given by—

$$q = \frac{6S\left(\frac{d^2}{4} - y^2\right)}{bd^3}$$

At the neutral axis $y = 0$ and $q = \frac{3}{2} \cdot \frac{S}{bd}$.

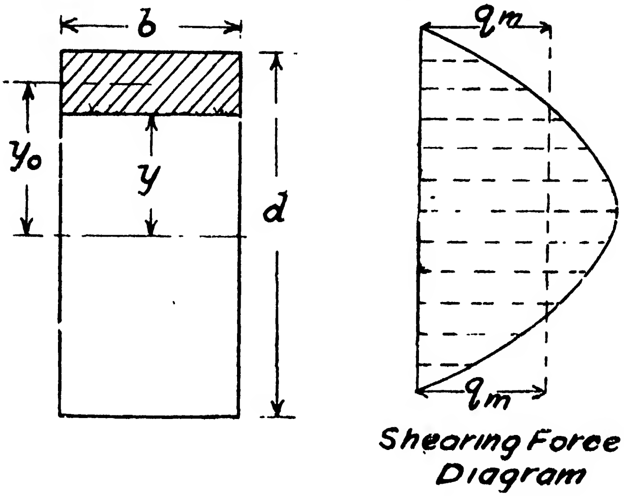

FIG. 18. SHEAR STRESS OVER RECTANGULAR BEAM SECTION

At the outermost layer $y = \frac{d}{2}$ and $q = 0$. The intensity of shear stress variation for a rectangular section of the proportions shown in Fig. 18 is illustrated in the right-hand diagram.

For a circular section the maximum shear stress, at the neutral axis, is $\frac{4}{3}$ of the mean.

The Resultant Stress in Beams

The shear and normal stresses in beams under load have each been considered separately, and it now remains to study the combined effect at each part of the section of these stresses.

The stresses which occur at any part of the section are those shown in Fig. 19, and consist of—

(1) A normal stress, either tensile or compressive.
(2) A shear stress acting horizontally.
(3) An equal shear stress acting vertically.

The resultant or principal stress corresponding to these stresses acts normally to a plane, the inclination of which depends upon the relative values of the component stresses—that is, to the locality of the part of the section at which they are considered.

Fig. 19 illustrates the manner in which the principal stresses occur over the section of a beam, the right-hand diagram showing the resultant of the stresses given in the other two diagrams.

If a number of such sections be treated in this way, a series of curves, showing the directions of the principal stresses, can be obtained, similar to that shown in Fig. 20 (*A*). The concave-upwards curves marked positive are compression stress directions, whilst the concave-downwards curves marked negative are tensile; the example shown corresponds with the case of a uniformly loaded beam supported at its ends. Fig. 20 (*B*) shows the manner in which the shear and normal stresses vary along the span of a loaded beam supported at its ends.

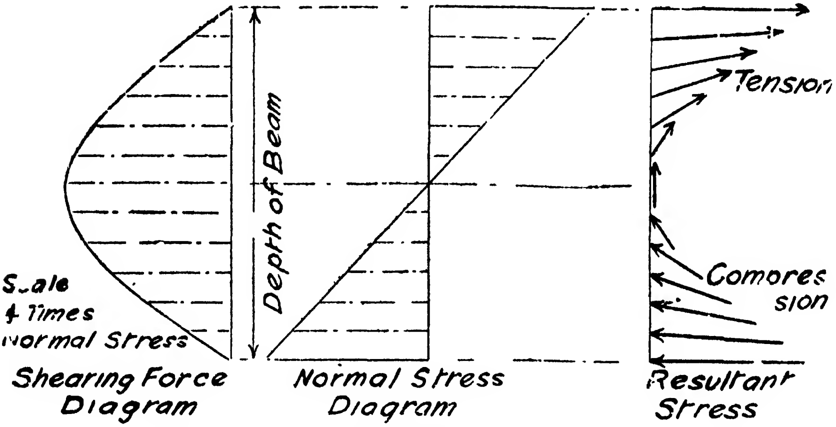

FIG. 19. THE RESULTANT STRESSES IN A BEAM

It will be observed that the shear stress diagram vanishes at the centre section of the beam, whilst the normal stress reaches its maximum values, whereas at the ends of the beam the shear stress is a maximum and the normal stresses zero. The effect upon the directions of the principal stresses is clearly shown in the diagram.

Deflection of Beams

Having considered the stresses occurring in loaded beams, it now remains to study the effect of the strains produced.

Upon the same assumptions that were made in the case of the stresses, in regard to stressing within the elastic limit and in connection with plane sections remaining plane after bending, it can be shown

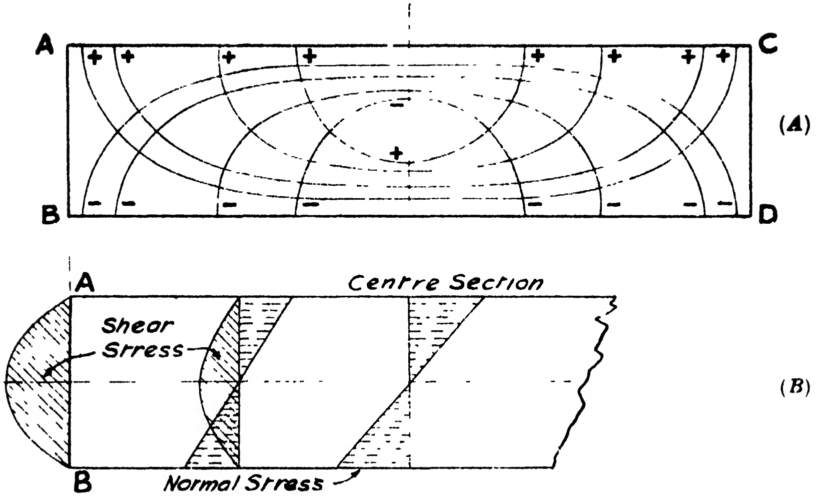

FIG. 20. (*A*) LINES OF PRINCIPAL STRESSES IN LOADED BEAM
(*B*) DISTRIBUTION OF SHEAR AND NORMAL STRESSES

that the curvature* produced by bending is proportional to the bending moment and inversely to the moment of inertia, and to the modulus of elasticity, that is—

$$\frac{1}{R} = \frac{M}{EI}$$

where R = radius of curvature,

E = Young's modulus,

I = moment of inertia about neutral axis,

M = bending moment.

But it has been shown that

$$\frac{M}{I} = \frac{p}{y}$$

so that—

$$\frac{1}{R} = \frac{M}{EI} = \frac{p}{Ey}$$

It follows from this that if the B.M. is constant for all places along the beam, then the beam will be bent uniformly to a circular arc.

---

* Here "curvature" is used in the sense that it is inversely proportional to the radius of curvature.

Mathematical Expression for Curvature, Slope, and Deflection

If distances along the span (Fig. 21) from a given origin be denoted by x, deflections at x, perpendicular to the initial length of the beam, by u, and the angular slopes at x of the beam by θ, then the following relations hold—

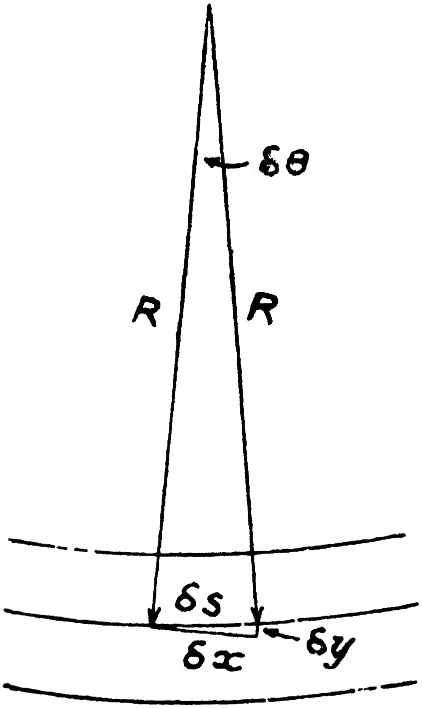

FIG. 21. CURVATURE, SLOPE, AND DEFLECTION OF BEAMS

$$\frac{1}{R} = \frac{M}{EI} = \frac{d\theta}{dx}$$

$$\theta = \frac{du}{dx}$$

so that $$\theta = \int \frac{1}{R} \,.\, dx \,. = \int \frac{M}{EI} \,.\, dx$$

and $$u = \int \theta \,.\, dx = \int\int \frac{M}{EI} \,.\, dx$$

It is usual to choose the origin at the point of loading or of support, and to express M, the bending moment, in terms of the distance x and the loads.

Example. Find the slopes and deflections at the centre and ends of a uniformly loaded beam supported at the ends.

Let w = the uniform load per foot run of beam;

l = span of beam.

Taking the origin at the centre, the B.M. at any point situated at a distance x from the origin is given by—

$$M = \frac{wl^2}{8} - \frac{wx^2}{2}$$

The slope—

$$\theta_x = \int \frac{1}{R} dx = \int \frac{M}{EI} dx = \int \frac{w}{2EI}\left(\frac{l^2}{4} - x^2\right) dx = \frac{wx}{2EI}\left(\frac{l^2}{4} - \frac{x^2}{3}\right)$$

At the centre $x = 0$, and there is no change of slope. At the ends $x = \frac{l}{2}$ and $\theta = \frac{wl^3}{24EI}$.

(It should be noted that if w is in pounds, E in pounds per square inch, and l and I are in inch units, the slope θ is given in circular measure, or radians, 1 radian being equal to 57·296°.)

The deflection—

$$u_x = \int \theta \,.\, dx = \frac{w}{2EI}\int\left(\frac{l^2x}{4} - \frac{x^3}{3}\right) dx = \frac{wx^2}{8EI} \cdot \left(\frac{l^2}{2} - \frac{x^2}{3}\right)$$

At the centre, the deflection will be given by putting $x = \frac{l}{2}$, since the origin is there. Then—

$$u = \frac{5}{384} \cdot \frac{wl^4}{EI}$$

Similarly for other types of loading.

Special Cases of Loaded Beams

It can be shown that the greatest slope of any loaded beam can be expressed in the form—

$$\theta_m = a \,.\, \frac{Wl^2}{EI}$$

and the greatest deflection by—

$$u_m = b \,.\, \frac{Wl^3}{EI},$$

where a and b are constants, W the total load, and l the span.

TABLE 5

VALUES OF CONSTANTS IN SLOPE AND DEFLECTION FORMULÆ

Type of Beam	Loading	Value of Constant	
		Slope a In $\theta_m = a \cdot \frac{wl^2}{EI}$	Deflection b In $u_m = b \cdot \frac{wl^3}{EI}$
Cantilever of uniform section.	Single load at end.	$\frac{1}{2}$	$\frac{1}{3}$
Cantilever of uniform section.	Uniformly distributed load.	$\frac{1}{6}$	$\frac{1}{8}$
Beam of uniform section supported at ends.	Single load at centre.	$\frac{1}{16}$	$\frac{1}{48}$
Beam of uniform section supported at ends.	Uniformly distributed load	$\frac{1}{24}$	$\frac{5}{384}$

The deflection of a beam subjected to more than one load is equal to the algebraical sum of the deflections due to the separate loads.

Shape of Bent Beam (Transverse Bending)

When an initially straight beam is bent, the longitudinal filaments on the compression side of the neutral axis become "bulged," whilst the tension side filaments become contracted, with the net result that an originally rectangular section approximately assumes the shape shown in Fig. 16c for the case of a beam supported at the ends.

Since the lateral strain $= \sigma$ times the longitudinal strain, where σ is Poisson's ratio, it follows that the transverse radius of curvature will be σ times the longitudinal radius, or $R\sigma$.

In practice, the assumption of freely extending or contracting filaments does not hold for most materials or for wide beams, such as flat strips.

Work Done in Bending a Beam

The resilience, U, of a beam is measured by the sum of one-half of the products of the B.M.'s and the angular slopes according to the relation—

$$U = \int \tfrac{1}{2}M \, . \, d\theta = \frac{1}{2EI}\int M^2 \, . \, dx,$$

or to the sum of one-half of the products of the loads into the deflections caused by the loads.

$$U = \int \tfrac{1}{2}w \, . \, du$$

It can be shown that in the case of a rectangular beam of constant section, subjected to a uniform B.M.—

$$U = \frac{f_c^2 V}{6E}$$

where f_c = maximum stress at the outermost fibre,
V = volume of beam.

Stresses due to Torsion

When a pair of equal but opposite couples are applied to the ends of a rod or shaft, acting about the axis of the shaft, the stress caused is one of pure shear, and the shaft is said to be subjected to *torsion*, the moment of the couple being termed the *torque*.

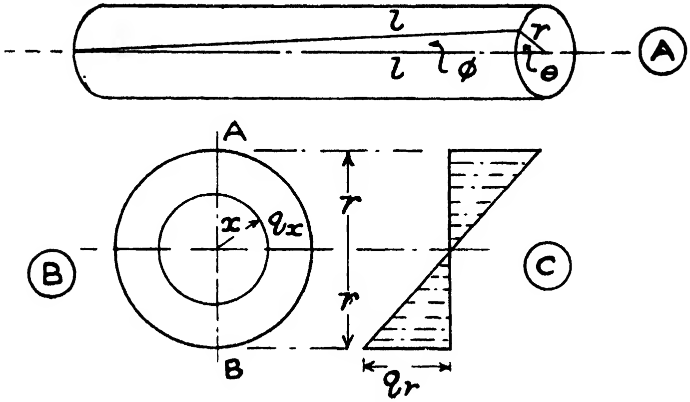

FIG. 22

The intensity of the shear stress, in the case of a circular shaft, varies from zero at the centre to a maximum at the periphery, the distribution being that shown in Fig. 22. The shear strains caused will also follow the same law of distribution.

The shear stress q_x at any radius x will be given by—

$$q_x = \frac{q_r}{r} \cdot x$$

where q_r = shear stress at radius r.

The shear strain ϕ at radius x (or angle of shear) is given by—

$$q_x = C \cdot \phi$$

If T = the applied torque, then—

$$T = \frac{\pi q_r \cdot r^3}{2} = \frac{\pi q_r d^3}{16}$$

where $d = 2r$ = the diameter of the shaft.

For a *hollow shaft* of external and internal diameters d and d_1 respectively, the maximum shear stress q at the periphery is given by—

$$T = \frac{\pi q}{16} \cdot \frac{d^4 - d_1^4}{d}$$

i.e.
$$q = \frac{16T \,.\, d}{\pi[d^4 - d_1^4]}$$

The maximum intensity of stress is altered very little by removing quite an appreciable amount of material from around the centre. Thus, the relative values of the maximum stresses, for a given torque, in the cases of a solid shaft, and a hollow shaft of the same outside diameter but with the inside diameter equal to half of that of the outside, are as 15 to 16 respectively.

The relative weights are as 4 to 3, and the relative ratios of

$$\frac{\text{maximum shear stress}}{\text{weight}}$$

are as 3·75 to $5.\dot{3}$, so that the hollow shaft is considerably the stronger for its weight.

Angle of Twist

The angle of twist θ for a length l of shaft, of diameter d, is given by—

$$\theta \,.\, \frac{d}{2} = \phi \,.\, l \text{ (where } \phi = \text{ longitudinal twist)}$$

$$= \frac{q}{C} \,.\, l$$

Whence
$$\theta = \frac{32T \,.\, l}{\pi d^4 C}$$

For a hollow shaft of external diameters d and d_1 respectively—

$$\theta = \frac{32Tld}{\pi C[d^4 - d_1^4]}$$

NOTE. The angles θ and ϕ are given in radians.

Units. If linear dimensions such as l, d, d_1, etc., be in inches, T in pounds inches, C in pounds per square inch, then the shear stresses, such as q, will be in pounds per square inch.

Combined Bending and Torsion

Many examples occur in engineering work of shafts which are subject to a bending action in addition to that of torsion. For example, any overhung shaft transmitting power by torsion will be under bending action due to the weight of the overhung part. The crankshaft of an engine is subjected to the bending action of the connecting-rod thrust, and to the torsion of the crank. Another common example is that of a shaft having a pulley, the belt on which exerts a pull upon the shaft whilst running. If the bending moment is appreciable compared with the torque, its effect should always be taken into account. Moreover, the maximum values of these quantities should be considered, and not the mean values, for in many cases, notably those occurring in petrol engine work, the torque varies, sometimes considerably, during a working cycle, and always exceeds the mean torque.

Thus, the maximum torque—which decides the dimensions of the crankshaft—may be several times the mean torque value. For a single-cylinder engine the ratio of maximum to mean torque may be 7 : 1 to 9 : 1 and for a four-cylinder vertical engine, from 2·0 : 1 to 2·2 : 1. With increase in the number of cylinders this ratio diminishes so that for a twelve-cylinder engine it is usually from 1·05 : 1 to 1·15 : 1.

When a shaft is under combined bending and twisting action, there will be at any cross-section a direct tensile or compressive stress varying from zero value at the neutral axis to a maximum at the furthermost parts of the section or periphery, and a shear stress varying from zero at the centre to a maximum at the periphery.

The intensity of the normal stress on the surface is given by—

$$p = \frac{32M}{\pi d^3}$$

and of the shear stress at the same place by—

$$q = \frac{16T}{\pi d^3}$$

These stresses occur in different directions, and further there is another accompanying shear stress q acting at right angles to the one above mentioned.

These stresses may be combined by the methods already considered, and the principal stress values r will be found to be given by—

$$r = \frac{p}{2} \pm \sqrt{q^2 + \frac{p^2}{4}}$$

$$= \frac{16}{\pi d^3}[M \pm \sqrt{T^2 + M^2}]$$

The resultant stress r will be seen to be similar to that caused by a ***single equivalent bending moment*** of value $\frac{1}{2}[M \pm \sqrt{T^2 + M^2}]$ or by a single *equivalent twisting moment* of amount $[M \pm \sqrt{T^2 + M^2}]$.

The resultant stress r is, however, a *normal* stress, the positive root value corresponding to the maximum, and the negative root value to the minimum principal stress, which occurs at right angles to the direction of the former.

The greatest shear stress due to p and q acting together is given by—

$$q_m = \sqrt{q^2 + \frac{p^2}{4}} = \frac{16}{\pi d^3}\sqrt{M^2 + T^2}$$

and occurs over planes inclined at 45° to the planes of principal stress.

The maximum principal stress value is usually considered as being the working stress in the shaft, whilst the maximum shear stress determines the manner of failure, when the shaft is loaded to destruction.

Work Done in Torsion

The mean resilience of a shaft under torsion is given by—

$$w = \tfrac{1}{2}T\frac{\theta}{l}$$

$$= \frac{q^2\pi d^2}{16C} \text{ per unit length}$$

Or mean resilience per unit volume $= \frac{q^2}{4C}$, where q is the shear stress at the circumference.

CHAPTER II

THE PROPERTIES OF MATERIALS UNDER TEST

Metals

THE previous chapter dealt with the stresses to which materials are subjected as viewed from the theoretical side. It is now proposed to consider the actual behaviour of materials under different kinds of tests. For this purpose it is deemed advisable to deal with the properties of metals separately in the present chapter.

Definitions

Malleability is the property which enables a material to be beaten, hammered, or rolled out into thin sheets without fracture or other detrimental qualities.

Ductility* is the property whereby a material may be rolled or drawn out by tension into a smaller section. It is this property that is taken advantage of when materials are drawn out into wire.

Materials such as iron, steel, copper, and others, are noted for their ductility; these materials also possess a certain degree of elasticity and plasticity.

Plasticity is the property of a material in which any stress produces a permanent strain; it is the opposite effect to that produced in an elastic material. This property of certain metals enables them to "flow" when under the influence of certain stresses. The behaviour of lead under stress is an example of this property.

Commercially, the plastic property is utilized in such processes as "forging," stamping, welding, extruding, squirting of lead pipes, making of white-metal bearings, type, etc.

Hardness† is the power of a material to resist indentation by another material. It is usually taken as a measure of the resistance of wear of metals.

Brittleness denotes the want of *ductility* or *malleability*.

The above properties are not constant for the same material, but vary, relatively, according to the state of the material; for example, the hardness of steel will depend upon the treatment to which it has been subjected. Thus, steel possesses various degrees of hardness according to whether it is annealed, forged or hammered, hardened, or hardened and tempered.

The property of ductility is only exhibited after a material has been stressed beyond the elastic limit.

---

* A Table of Malleability and Ductility is given in Appendix IV.

† For methods of testing hardness, see Chapter VII.

For engineering purposes a material which ultimately shows much ductility, after the elastic limit is passed, is to be preferred, for in the case of many structures the elongation of one member may cause a better distribution of the loads upon the others.

Behaviour of Metals in Tension

The simplest test to which a material is subject in practice is the tensile one. In many cases the tensile test result is regarded as the sole criterion of the suitability of the material for a given purpose: moreover, there is often a relation between the tensile properties and the other properties such as the hardness, compressibility, or shearing strength, so that it is often only necessary to make a tensile test in order to deduce, approximately, the other essential strength properties. Thus, in the case of most mild steels, the "hardness number" is related to the tensile strength,* the tensile and compressive strengths are usually the same, and the shearing strength is a definite fraction (usually about 0·7 to 0·75) of the tensile strength. The quantities usually measured in tensile tests are: (1) The values of the tensile stress at the elastic, yield, and breaking loads; (2) the extensions upon a given length under different stresses: and (3) the reduction of area at fracture.

It is interesting to study the behaviour of a typical metal such as mild steel under a gradually increasing tensile stress. For this purpose, it is necessary to measure or record the corresponding strains and it is convenient to draw a diagram of corresponding stresses and strains. A specimen of the correct proportions is cut from the mass of metal, the properties of which it is desired to know, and it is placed in the *grips* of the *testing machine*. The strains produced, when the tensile load is applied, are usually measured by some form of *extensometer*—that is to say, an instrument used for measuring, by means of magnification systems the very small changes in length.

In some testing machines an autographic apparatus is provided for actually drawing to scale the stress-strain diagram during a test, and the curve exhibits the properties of the material right up to the breaking-point. Fig. 23 illustrates a typical stress-strain curve for mild steel, for both tensile and compressive stresses.

The strains produced by small stresses are extremely small, usually of the order of from about $\frac{1}{120}$ per cent to $\frac{1}{140}$ per cent for stresses of about 4 per cent of the breaking-load-value for low carbon steels.

As the stress is increased upon the specimen, the strains increase in proportion, very nearly according to Hooke's law, right up to a certain value of the stress (indicated by A in Fig. 23), above which

---

* *Vide* page 199.

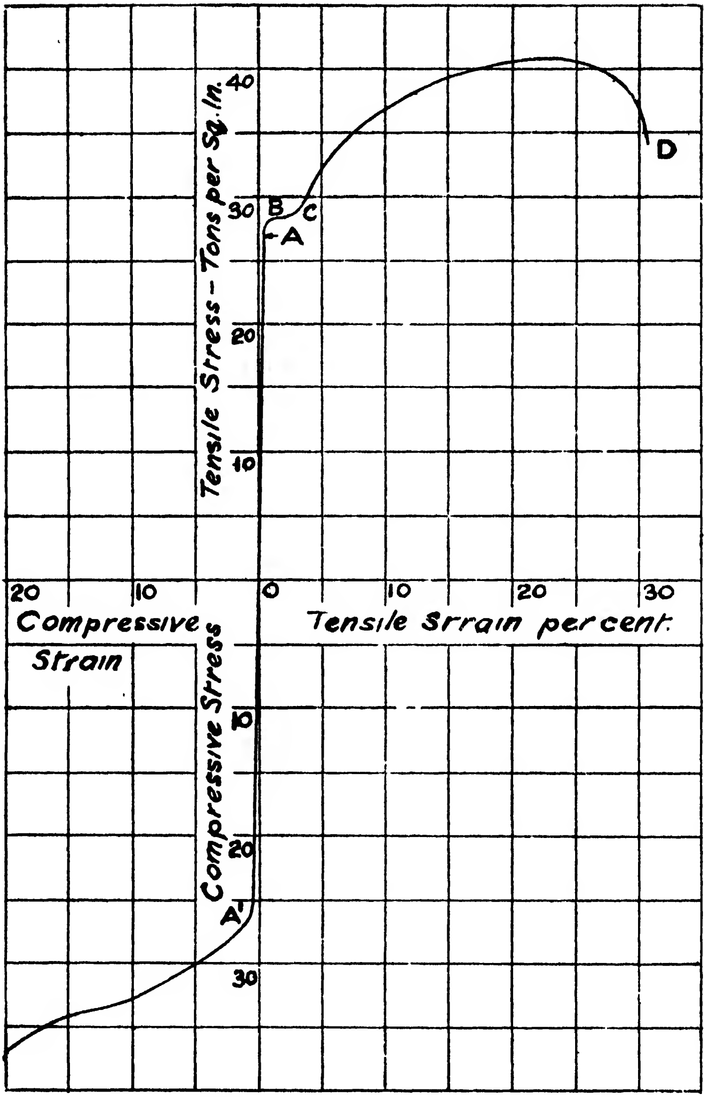

FIG. 23. STRESS-STRAIN DIAGRAM FOR "40-TON" STEEL

any further stress increase does not cause a proportionate strain increase. The stress value at this point is termed the *Elastic Limit.* The line OA is straight for iron and most kinds of annealed steels but is curved for cast iron, and hardened high carbon and alloy steels, aluminium alloys, copper and similar metals.

Elastic or Proportional Stress Limit

In ductile materials such as iron and low carbon steels, in which the straight portion of the stress-strain diagram is well-defined, there is usually no difficulty in ascertaining the stress value corresponding to the upper end of the straight portion, with an accuracy that is sufficient for most commercial test purposes. In such cases it is usual *to define the elastic or proportional limit* as the stress, i.e. the load divided by the original cross-sectional area of the specimen, at which the strain, i.e. the elongation per unit of gauge length, ceases to be proportional to the corresponding stress.

It is not, however, possible to determine the elastic limit with a high degree of precision unless very accurate and close readings of loads and extensions can be taken and the *actual rate of loading of the specimen* is stipulated or standardized. Usually, it is necessary to obtain high magnification autographically-recorded stress-strain diagrams under sensitive load and strain conditions, in order to ascertain the actual elastic limit for materials obeying Hooke's law.

In the case of many materials, including higher carbon and alloy steels, light aluminium and magnesium alloys, the stress-strain diagram has no clearly-defined straight portion so that it is not possible to obtain the elastic limit, as previously defined. In such cases, what is known as the *proof stress* at a specified strain—expressed as a given percentage of the original gauge length—is employed instead of the elastic limit. Further reference to this property and its determination is given later in this chapter.

In regard to the "rate-of-loading" effect—and to which fuller consideration is given in the next section, dealing with the yield point—it may here be stated that if a tensile test piece is *loaded at an extremely low rate,* namely, a matter of a few days, the *elastic limit* (and also the ductility) are *markedly lower* than when loaded at the usual commercial rates. Further, as the rate of loading is speeded up, to a matter of a few seconds for a complete test, the *elastic limit* increases appreciably, as also does the tensile strength or ultimate stress.

The Yield Point

In engineering design it is very often the value of the stress at the yield point that determines the permissible dimensions of components, and materials having relatively high yield points are usually specified where both strength and weight considerations are involved. In the case of struts, the ultimate strength is largely governed by the yield point value for the material, and this value has been adopted by authorities in this country* and in the U.S.A.†

The British Standards Institution‡ defines the *yield stress* as the lowest stress at which the elongation of the test piece increases without increase of load. For practical purposes the yield stress is defined by the B.S.I. as "the stress at which a visible permanent increase occurs in the distance between the gauge points on the test piece observed when using dividers; or at which, when the load is increased at a moderately fast rate, there is a distinct drop of the testing machine lever or, in hydraulic machines, a hesitation in the movement of the gauge finger."

Unfortunately, the yield point as determined by these commercial methods does not give a correct evaluation of the materials' strength. There are two principal reasons for this, namely, (1) *Inequality of stress distribution over the cross-section of the test piece*, and (2) *effect of the rate of loading*.

(1) *Inequality of Stress Distribution.* It is difficult, under most commercial conditions of tensile testing, to ensure that the load is applied strictly in the axial sense, owing to the effects of the types of grips employed, e.g. spherical shackles or wedge-grips. Unless specially designed axial-loading shackles are employed the specimen is loaded eccentrically and there is a greater tensile stress on one side; the material therefore begins to yield on this side at an earlier stress value in order to equalize the stress distribution over the section; the yield point of the whole specimen, which has been termed the *plastic yield stress*, then occurs at a lower value than the true yield point of an axially-loaded specimen.

(2) *Rate of Loading Effect.* Various investigations which have been made in connection with tensile test specimens loaded at different rates all agree that the actual rate of loading has an important influence upon the yield point as well as on the elastic limit, ultimate stress and ductility (after the yield point has been reached).

Fig. 24 ‖ illustrates the results of tests made by H. Quinney upon specimens of annealed Yorkshire iron, at two different rates of loading, namely, at complete test times of 2 min. ((Curve 1) and 75 hr. (Curve 2). It will be observed that in the former case the elastic limit B and also the yield point is considerably lower than the value at A for the slower

---

* Report of the Struts Panel of Steel Structures Research Committee. Dept. Scient. and Industr. Research, 1934.

† *Trans. Amer. Soc. Civ. Eng.*, 1918 and 1933.

‡ B.S.S. for Tensile Testing of Metals, No. 18—1938.

‖ "Time Effect in Testing Metals," H. Quinney, *The Engineer*, 30th March, 1934.

test. The yield points for tests 1 and 2 were 13·25 and 9·9 tons per sq. in. respectively, and the ultimate strengths 18·75 and 20·6 tons per sq. in.

It will be noted that the higher ultimate strength corresponds to the faster rate of loading, and the ductility, as shown by the extension values after yielding, is much lower under less rapid loading conditions. The results of tests made upon a 0·15 per cent annealed mild steel for three different rates of loading, by the same investigator, are shown in Fig. 25; the corresponding values of the yield points P_1, P_2 and P_3 at A, B and C, together with the maximum stresses and test duration times, are given in the following table—

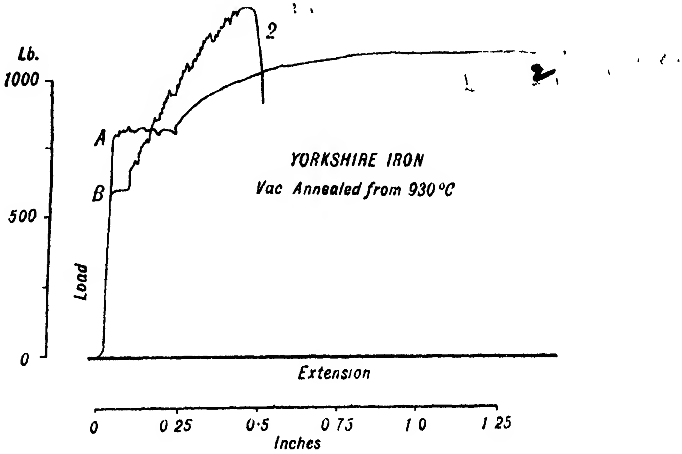

FIG. 24. EFFECT OF RATE OF LOADING ON THE YIELD POINT AND ULTIMATE STRENGTH

TABLE 6

EFFECT OF RATE OF LOADING

Curve No.	Stress at Yield Point, Tons per sq. in.	Maximum Stress, Tons per sq. in.	Duration of Test
1	18·25	27·0	5 sec.
2	15·70	24·1	2 min.
3	12·25	23·1	135 hr.

The results given in Table 6 are in general agreement with those shown in Fig. 24 for the annealed Yorkshire iron.

Tests which were made upon mild steels in the "as received" non-annealed condition showed that the effect of speed was considerably less than for the annealed steel. In the case of heat-treated higher carbon and alloy steels it has been shown* that the yield point is independent of the rate of loading.

It may be pointed out that in connection with the determination of the yield point by *the observation of the drop of the beam* of the testing machine, using a moderate rate of loading, the effect due to the *inertia*

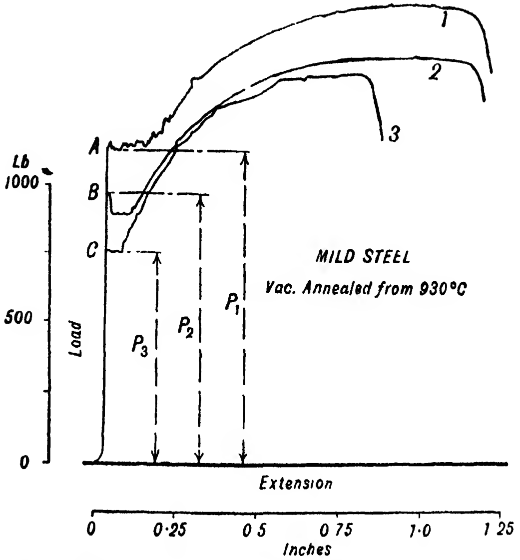

FIG. 25. RATE OF LOADING EFFECT ON MILD STEEL

of the beam may be considerable, and it is easy to obtain an error in the case of mild steel of the order of 2 tons per sq. in.

Visual Methods for Determining Yield Point

In ordinary tensile tests of ductile materials, such as iron and mild steels, the occurrence of the yield point, during the steady period of loading past the elastic limit, is indicated by a sudden extension of the specimen which is sufficient to be capable of direct measurement with a pair of dividers placed with one point in one of the specimen gauge marks. The other point is used to make a series of small sweeps across the other gauge mark during the elastic loading; when the yield occurs there is a noticeable displacement of the gauge mark relatively to the divider point sweep marks.

With the aid of a simple magnification lever method, such as that

---

* A. F. C. Brown and N. D. G. Vincent (N.P.L.), *Proc. Inst. Mech. Engrs.*, June, 1941.

employed in the yield point indicator shown in Fig. 26, this displacement can be shown to a magnified scale. The usual types of yield point indicator have magnifications of 10 to 1. In the example illustrated in Fig. 26 the two pointed arc ends are placed in the gauge marks on the specimen, when the pointer on the left is arranged to read at zero on the scale. When yield occurs a ten-fold movement of the pointer takes place, showing clearly the yield point.

If an extensometer is employed, its readings before and after yield takes place will readily reveal the actual yield point.

A practical method of indicating the yield point is to give the specimen *a coating of a brittle material such as fine whitewash* prior to testing. At the yield point the dried whitewash cracks and flakes off.

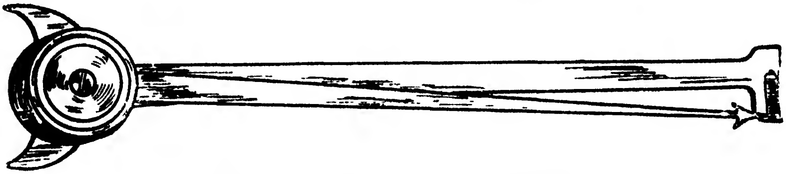

FIG. 26. A YIELD POINT INDICATOR

Another method* is that of giving the specimen a *thin coating of resin*, by melting the latter on to the surface at a temperature of about 140° C., making sure that the resulting surface, when cool, is quite smooth. The *surfaces of built-up structures*, such as beams, aeroplane spars, struts, etc., can be coated with whitewash or resin, before testing under gradually increasing loads, to destruction, in order to afford indications of the processes of yield of the component parts.

When a specimen coated with resin is loaded gradually, it is possible to detect fine cracks in the resin at right angles to the axis of stress but at much lower stresses than the yield point value. These cracks, which are not to be confused with Lüder's lines, are due to the elastic deformation of the material of the specimen. As the stress is increased these fine lines broaden, spread and appear at different points, when the yield point stress is attained. During subsequent plastic elongation the resin flakes off over practically all, if not all, of the surface.

The method may be used also *to show the Lüder's lines*, which are usually inclined to the axis of stress and extend right through to the surface of the resin. The existence of "stress-raisers" or increased local stresses due to the design of stress-bearing parts is indicated by the appearance of these lines at these regions before the general yielding of the structure occurs. In connection with the application of the resin to the test piece it is not necessary to heat to coat the surface of the

---

* "The Resin Method of Indicating Yield," J. S Blair, *The Engineer*, 4th December, 1942.

specimen since there are now available suitable solvents for resin which evaporate fairly quickly and leave a thin, smooth coating of resin on the surface.

The Yield Ratio

In connection with the design of engineering parts where lightness combined with maximum strength is concerned, the best steels to employ are those giving the highest safe working stresses. Other conditions being the same the higher the yield point for a given tensile breaking strength the better the steel for the above purpose, since it is the elastic limit (which, in most cases, is just below the yield point) that determines the maximum working stress.

The yield ratio is the term applied to the ratio $\frac{\text{Yield point}}{\text{Tensile strength}}$; this ratio has become important to the designer.

The yield ratio for steels in the annealed condition, for mild, low and medium carbon steels varies from 50 to 55 per cent; this low ratio corresponds to the separation of pearlite in the structure of the steel.

For alloy steels such as the 2 to 5 per cent nickel ones in the heat-treated condition the yield is usually 60 to 65 per cent.

For high-tensile alloy steels, heat-treated, the yield ratio ranges from 70 to 80 per cent. Thus, for chrome-vanadium steel (1·3 Cr; 0·18 V) hardened and tempered, the yield ratio is 75 per cent. For air-hardening gear steel (Ni 4·0; Cr 1·25) the yield ratio is about the highest known, namely, 85 per cent. With such steels it is possible to allow much higher working stresses than for the other steels mentioned.

Elongation of Specimen—Ductility

The usual indication accepted as evidence of the ductility of a material is the percentage elongation at fracture. for many purposes it is usual to specify the limits of elongation which the material must comply with.

The percentage elongation depends, for the same material, upon the shape and length of the test specimen. For example, if the extensions be measured upon a round bar of, say, 1 in. diameter, and 8 in. length, they will be found to be appreciably greater than those measured upon a ½ in. diameter bar of the same length; this is due to the fact that the greatest part of the elongation of a specimen occurs over a short distance (from 3 to 4 diameters), about the centre of the specimen.

Table 7 gives the actual extensions, in inches, for each 1-in. length of the specimen, along the whole gauge length. The places of fracture are indicated by means of an asterisk, and at these places the local extensions will be seen to be very great, as compared with those of more remote sections.

TABLE 7

ELONGATIONS AT DIFFERENT PLACES ALONG TENSION SPECIMEN (Unwin)

Material	Distance in Inches from One End of Bar											
	1	2	3	4	5	6	7	8	9	10	11	12
Rivet iron (10-in. bar)	0·17	0·195	0·23	0·51*	0·26	0·23	0·25	0·23	0·23	0·18	—	—
Axle steel (12-in. bar)	0·16	0·17	0·21	0·21	0·18	0·17	0·21	0·65*	0·46	0·17	0·13	0·10
Brass (10-in. bar)	0·23	0·20	0·20	0·30*	0·21	0·22	0·24	0·21	0·21	0·21		
Lead (9-in. bar)	0·18	0·15	0·30	0·17	0·14	0·22	0·16	0·17	0·01*	-	-	—

* Specimen broke at this place.

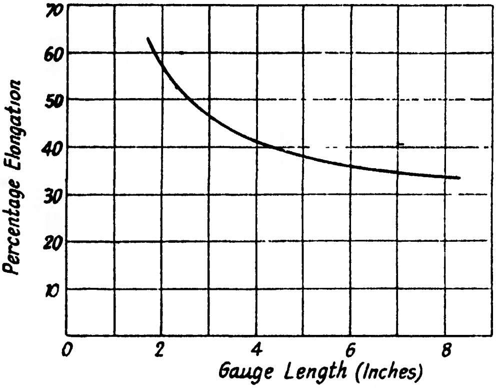

FIG. 27. RELATION BETWEEN GAUGE LENGTH AND PERCENTAGE ELONGATION

Fig. 27 shows the percentage elongations for different gauge lengths in the case of a mild steel round bar tested to destruction.

For comparisons of elongations the specimens should be geometrically similar. In this connection the British Standards Institution specifies a gauge length equal to 4 $\sqrt{\text{area}}$ or 3·54 times the test diameter for wrought and cast metals.

Within the elastic limit for materials such as mild steel, iron, and rolled metals, the elongation x over a given length l is proportional to the stress p, as shown on page 8.

The extension per unit length $\lambda = \frac{x}{l} = \frac{p}{E}$ where E is elastic modulus.

E and p are both in pounds or tons per square inch; x and l must also be in the same units, e.g. inches.

Many materials, such as cast iron, copper, hardened alloy steels, and cements, are not perfectly elastic, and therefore do not obey Hooke's law; the extensions, in most cases, even for small stresses, are not proportional to the stresses. In such cases, the extension per unit length λ is given by—

$$\lambda = c \,.\, p^n$$

where c is a constant, having a value of the same order as E, and n is a constant, which is greater than 1 for cast iron, copper, zinc, and cement, and less than 1 for leather, fabric, etc.

Unwin* has shown, as a result of a large number of tests, that percentage elongation $e = 100\lambda$ can be expressed in terms of the gauge length l in., by means of the formula—

$$e = 100\lambda = \frac{c\sqrt{A}}{l} + b$$

where c and b are constants for different materials, and A is the original cross-sectional area in square inches.

The following values of the constants c and b are given by Unwin—

TABLE 8

VALUES OF CONSTANTS IN UNWIN'S ELONGATION FORMULA

Material	c	b
Mild steel†	70·0	18·0
Tyre steel†	27·2	13·1
Axle steel†	39·2	20·6
Gunmetal (cast)	8·3	10·6
Brass (rolled)	101·6	9·7
Copper (rolled)	84·0	0·8
Copper (rolled—annealed)	125·0	35·0

† Mean values.

Sizes of Tensile Test Pieces

In order to secure uniformity of testing machines and to enable direct comparisons to be made of tensile test results, the sizes and shapes of test pieces used in this country have been standardized.

---

[*] *The Testing of Materials*, p. 100, by W. C. Unwin.

Detailed particulars of these are given in one of the publications of the British Standards Institution.*

The dimensions of the standard machined round test piece for general purposes are denoted in Fig. 28. It will be observed that the radius at the end of the parallel portion is left blank. In the earlier 1927 specification this radius was given as ⅞ in., but subsequently the value of ½ in. was substituted for wrought metals and 2½ in. for cast metals.

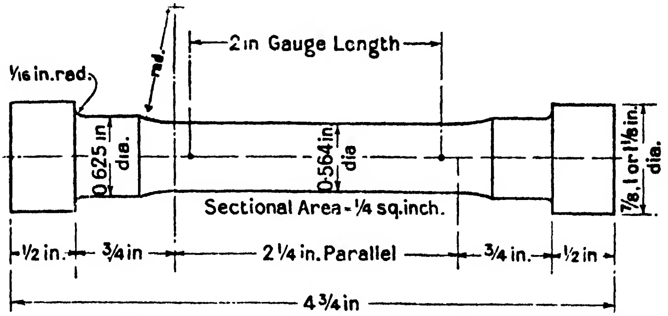

FIG. 28 DIMENSIONS OF STANDARD CYLINDRICAL TEST PIECE

The ratio of the gauge length to diameter for the standard specimen is 3·54. It should be noted that the parallel portion of a cylindrical specimen for tensile test purposes should be smooth-finished and polished, no tool marks or scratches being evident on the surfaces.

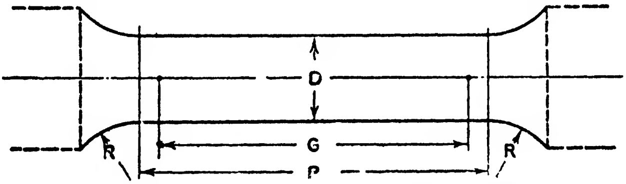

FIG. 29. DIMENSIONAL PROPORTIONS OF OTHER SIZES OF ROUND TEST PIECES

For other sizes of standard machined round test pieces the dimensions shown in Fig. 29 are specified as follows—

Cross-sectional area $A = \frac{\pi D^2}{4}$. Gauge length $G = 4\sqrt{A} = 3\cdot54D$.

Parallel length $P = 1\frac{1}{8}G$ (or $3\cdot98D$) minimum.

Radius at shoulder $R = \frac{G}{4}$ ($0\cdot88D$) minimum for wrought metals and $\frac{5G}{4}$ ($4\cdot40D$) minimum for cast metals (except cast iron).

---

* British Standard Specification No. 18—1938. Tensile Testing of Metals.

The test pieces for iron castings, which may have either screwed or plain ends, are also specified and tabular values are given. They differ from the wrought metal specimens in having a larger radius at the shoulder. Thus, for a minimum test diameter of 0·564 in., the minimum radius is 3½ in.; the minimum parallel length, 2 in.; minimum length of plain ends, 1½ in., and approximate overall lengths for plain and screwed ends, 7 1/16 in. and 4 13/16 in., respectively. The screwed specimens have either a ¾ in. B.S.F. or ⅞ in. B.S.W. thread.

The American A.S.T.M. Standard round test piece has a diameter of 0·5 ± 0·01 in., a gauge length of 2·0 ± 0·005 in., and parallel section of 2·25 in. The radius at the shoulder is not less than 0·125 in.

The standard flat test piece dimensions* are indicated in Fig. 30, the actual values being those given in Table 9. Specimens of these dimensions are employed chiefly in tensile tests of sheets, plate, strips, flat bars, sections, etc. In the special instance of tensile tests on sheet and strip metals used for purposes such as deep pressings an alternative test piece is recommended, the following being the dimensions—

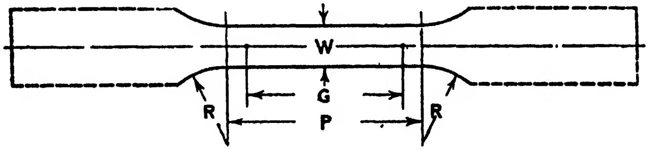

Fig. 30. British Standard Flat Test Pieces

$W = \frac{3}{4}$ in. $G = 8{\cdot}0$ in. $P = 9$ in. (minimum). $R = 1$ in. Overall length = 15 in.

TABLE 9

Dimensions of B.S. Standard Flat Test Pieces

Nominal Thickness of Test Piece		Up to but not including ⅜ in.			⅜ in. and thicker
		in.	in.	in.	in.
Width	W	½	1	1½ (max.)	1½ (max.)
Gauge length	G	2	4	8	8
Parallel length (minimum)	P	2½	4½	9	9
Radius at shoulder (minimum)	R	1	1	1	1
Approximate total length		8	12	18	18

The American A.S.T.M. standard flat test piece has the following dimensions—

$W = 1\frac{1}{2}$ in. $G = 8$ in. $P = 9$ in. (minimum). $R = 1$ in. to 3 in.

---

* B.S.S. modified values, 1940.

Approximate width in grips = 2 in. Parallel portion in grips = 3 in. Overall length = 18 in. (approximately).

For *tensile tests on wire* below ¼ in. diameter, for determination of the ultimate tensile stress only, the length of the test sample is not of importance so long as there is adequate length of wire between the grips of the testing machine and failure does not occur at the grips. For such tests the length between the grips should not be less than 2 in. Where the percentage elongation is specified either a short or long test length may be used. In the former instance the elongation is measured on a gauge length of 2 in. clear of the grips; in the latter case the elongation is measured on a gauge length of 10 in., clear of the grips.

For approximately correct purposes the elongation may be measured by noting the increase in distance between the grips during a test; this method does not, however, give satisfactory results for exact specification tests.

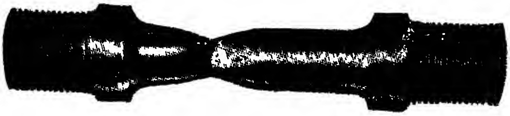

FIG. 31. SHAPE OF MILD STEEL TENSILE TEST SPECIMEN AT FRACTURE

It is sometimes the practice, with standard cylindrical test pieces, to machine the ends square and polish them in order *to use the surfaces for Brinell hardness tests* before making the tensile tests.

Reduction of Area

The shape of a test piece, after a tensile test, to fracture, for the case of mild steel, is shown in Fig. 31; the formation of a "waist" is marked in the case of ductile materials, such as iron, mild steel, and copper. The percentage area contraction is the same as the percentage elongation, within the limits of elasticity, when the latter is estimated upon the *final* length; this must be the case if the volume of the gauged portion is constant throughout. The tensile strength of a material is, for most practical purposes, reckoned upon the original cross-sectional area and the autographic curves of stress-strain show that near the breaking-point this "apparent stress" nearly always decreases.

The "true stress"—that is to say, the stress as reckoned upon the actual area of the smallest section—actually increases, however, since the area decreases, and the value of this real stress may be anything up to 30 or 40 per cent higher. Thus, in the case of the mild steel specimen mentioned in the preceding paragraph, the area at fracture was 55 per cent of the original. The true stress at fracture was therefore $\frac{100}{55}$ or 1·82 of the apparent stress.

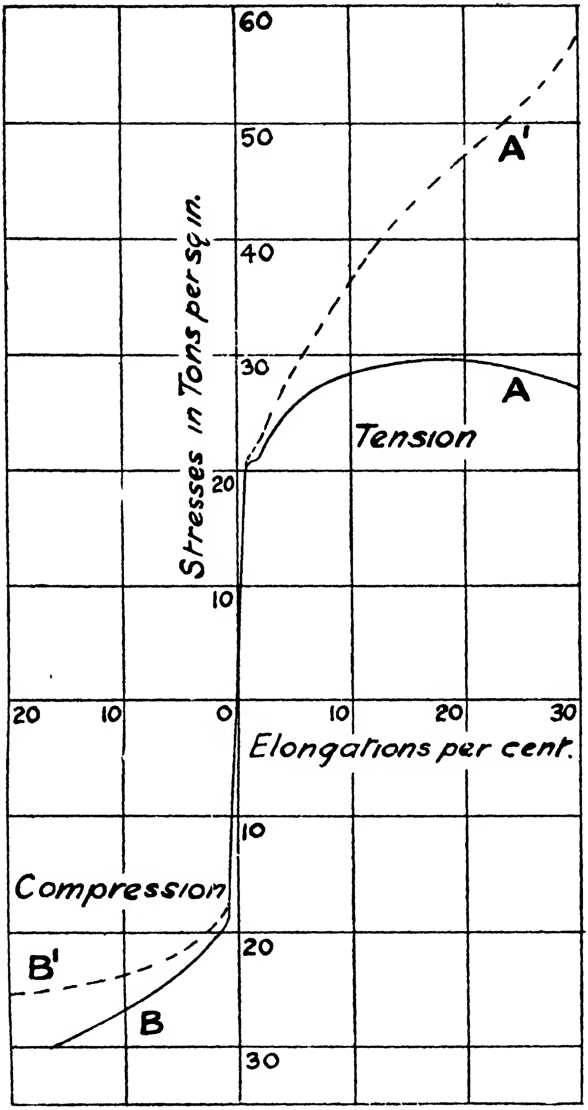

FIG. 32. REAL AND APPARENT STRESS CURVES
A', B'—Real stresses. A, B—Apparent stresses

The curves shown in Fig. 32 illustrate the difference between the real and apparent stresses, for both tension and compression in the case of a ductile material like steel. The material at the fractured ends usually presents the appearance of a conical portion, roughly of 45° slope on the one side, and a corresponding conical recess upon the other side.

Materials, such as wrought iron and mild steel, *which possess both plasticity and relatively high tensile strength*, show the greatest area reduction, whereas hard or brittle materials like cast iron or hard steel show only a small area reduction.

In general, the higher the tensile strength of a ductile material, the smaller the area reduction; there are, of course, exceptions to this rule, but it will be found to hold good in most cases. The same remarks apply in the case of the elongation as shown in the tables given on pages 57 and 67.

In the case of brittle materials such as fully-hardened tool steels and cast irons there is very little reduction of area at fracture, so that the true and apparent stresses are not very different in value, and the stress-strain curves obtained in both cases are of a somewhat similar nature.

In regard to the tensile testing of a ductile material, as mentioned earlier, the apparent or nominal stress passes through a maximum before fracture occurs. The maximum load is attained when local "necking" of the specimen commences. Thus, if L is the load at any moment and A the corresponding cross-section then the true or real stress $S = L/A$.

If L is a maximum $dL = A \,.\, dS + S \,.\, dA = 0$. As S increases with increasing area reduction, due to work-hardening and other phenomena, $A \,.\, dS$ is positive and $S \,.\, dA$ is negative. It can be shown[*] that when dL is less than zero the cross-section under consideration is more sluggish in regard to deformation than its neighbours, and the contraction is propagated from section to section, constituting a uniform elongation. If $dL < 0$ the inertia of the given section becomes less with increasing deformation, which is thus limited to that section, and neighbouring sections are only affected by virtue of cohesion. Thus local necking is started.

In testing single metal crystals[†] it has been found that with an increase in deformation dL passes from a negative to a positive value, so that a neck already formed disappears again. The so-called uniform elongation of a crystalline material consists therefore of a series of constrictions or neckings, although in practice the stress-reduction of area curve appears regular and continuous. This phenomenon is best

---

[*] The Tensile Test," *Metallurgist*, 25th March, 1927.

[†] "Masing and Polanyi, *Z. Metallk.*, p. 104.

demonstrated in those steels which possess to the maximum the property of hardening under cold work, namely, those having an austenitic structure. The beginning of actual local necking appears when the maximum load conditions occur for the last time.

If the true stresses are plotted against the corresponding reduction of area values and if m is the point on the curve (Fig. 33) corresponding to the maximum load then it can be shown, mathematically, that the tangent to the curve at m cuts the ordinate at $A = 0$, R of $A = 100$ per cent at a stress equal to twice the maximum stress. Thus, at any point P on the curve

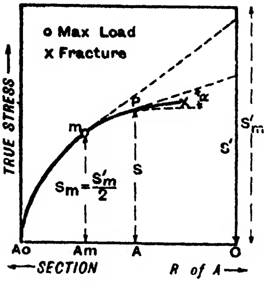

FIG. 33

$$\tan\alpha = \frac{S - S'}{A} \text{ and } \tan\alpha_m = \frac{S_m - S'_m}{A_m}$$

$$= -\frac{S_m}{A_m}$$

from which $S'_m = 2S_m$.

In practice the stress-reduction of area curve becomes practically linear at or just before the point of maximum load.

Extended Strain Scale

If the stress-strain values be plotted with an extended strain, or extension scale, the elastic limit and yield point values can be read off with a fair degree of accuracy from the resulting curves. An example of a typical stress-strain curve, taken up to just above the yield point,

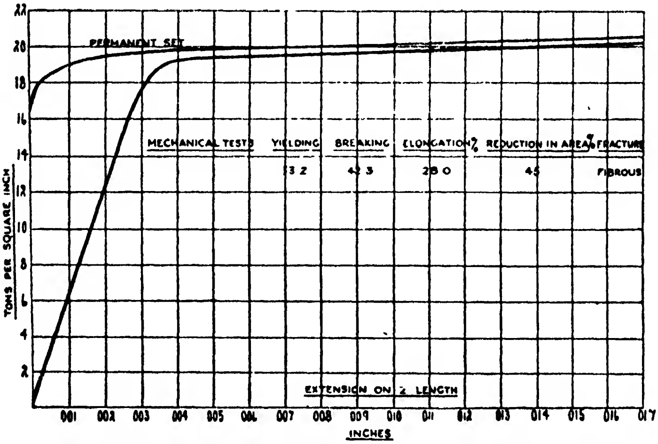

FIG. 34. STRESS-STRAIN CURVES, SHOWING THE ELASTIC LIMITS AND YIELD POINTS FOR HIGH CARBON STEEL PLATE

is shown in Fig. 34.* The carbon steel plate in question was in the normalized condition and had a tensile strength of 42·3 tons per sq. in., with 28 per cent elongation on 2 in., and a reduction of area of 45 per cent.

From an examination of this curve it will be seen that the elastic limit is 16 tons per sq. in., and the yield point 19·5 tons per sq. in. When the load was released the material had the permanent set, shown by the upper curve.

TABLE 10

PROPERTIES OF DIFFERENT FERROUS METALS

Material	Tons per Square Inch			Percentage Elongation	Percentage Reduction of Area
	Elastic Limit	Yield Point	Tensile Strength		
Cast iron, grey	-	—	4–8	- —	—
Cast iron, white	—	-	8–16†	- -	—
Electrolytic iron	12–15	14–17	19–21	40–42	55–60
Wrought iron	14·00	17	25·0	30·0	55·0
Mild steel, 0·2° C.	14·00	16	30·0	28·0	48·0
Mild steel, 0·35° C.	16·00	18	35·0	25·0	45·0
Case-hardening mild steel (annealed)	28·50	- -	34·1	44·0	62·2
Case-hardening mild steel (hardened)	34·80	-	46·4	3·2‡	8·1
Rivet steel	14–16	16–18	25–28	28–35	50–55
Rail steel	—	16–18	30–40	—	—
Cast steel (hardened)	25–30	-	50–55	5–8	—
Nickel steel (3 per cent Ni) (annealed)	29·07	- -	44·3	31·5	53·8
Nickel steel (3 per cent Ni) (oil-tempered)	80·18		83·5	16·0	43·4
Nickel-chrome steel (annealed)	43·50		55·0	22·0	64·0
Nickel-chrome steel (air-hardened)	86·00	-	113·0	13·0	33·0
Nickel case-hardening steel (normalized)	26·00		33·0	35·0	65·0
Nickel case-hardening steel (case-hardened)	60·00	-	69·0	18·0	61·0
Chrome-vanadium steel (as rolled)	46·40	-	57·1	25·0	61·2
Chrome-vanadium steel (heat-treated)	106·20	- -	120·4	8·0	19·9
Spring steel (tempered)	85–95	- -	95–105	8–12	25–30
Stainless steel (hardened)	—	38–45	50–60	18	45
Tool steel (tungsten-chromium)		-	—	—	- —
Manganese steel (toughened by quenching)	- -	26	68–72	60–70	50
Manganese steel (tempered at 400° C.)	-	25	64	46 (on 6 in.)	38
Steel castings (automobile)	20·50		0 30	22–25	35–40

---

* Messrs. Vickers' high carbon steel plate: C, 0·46 per cent; Mn, 0·74 per cent; Ni, 0·09 per cent.

† Specially treated automobile cast irons frequently attain values of 20 to 40 tons per sq. in. An account of some of these is given in Vol. I of this work.

‡ On 5-in. length.

Stress-strain Values for Alloy Steel

A typical example of a stress-strain curve for a high tensile alloy steel is given in Fig. 35. The steel in question was Vickers' Vibrac grade, and had a tensile strength of 52 tons per sq. in., an elongation and reduction of area of 20·5 and 47 per cent respectively. The elastic limit and yield points were, respectively, 38 and 41·5 tons per sq. in. The ratio of the yield point to the tensile strength was 0·80. In the case of ordinary mild steel this ratio is 0·60 to 0·65. From these values it will be seen that one can work at much higher stresses, in relation

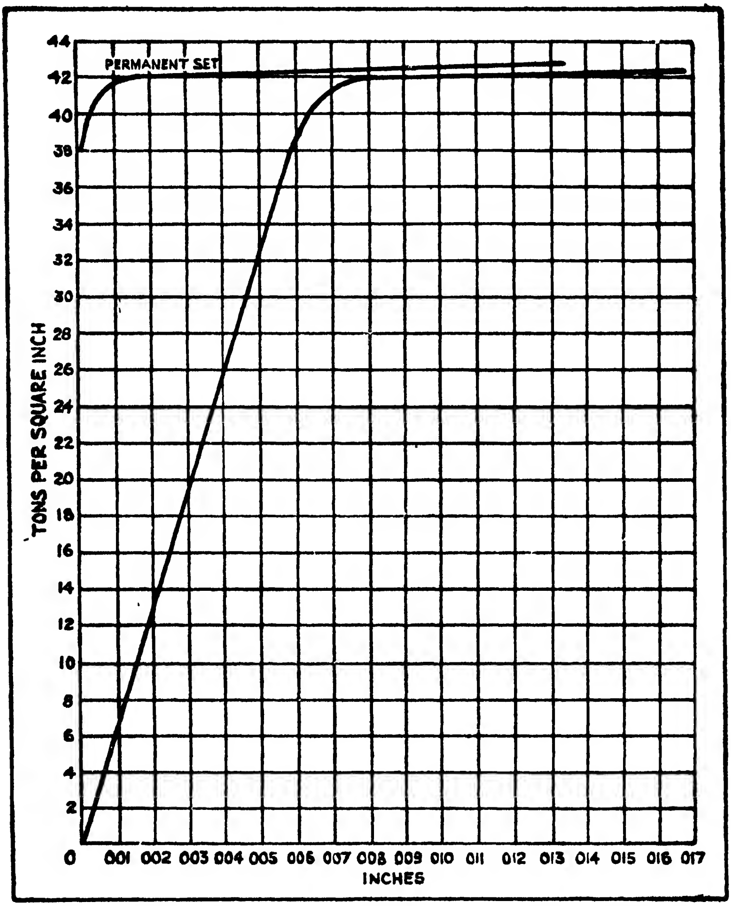

FIG. 35. MAGNIFIED STRESS-STRAIN CURVE FOR HIGH TENSILE ALLOY STEEL (VIBRAC)

to the breaking point, with alloy steels than with mild steels, a fact that results in a saving of weight with the former steel.

Materials With Indefinite Yield Points—Proof Stress

Whilst most of the steels hitherto considered have fairly well-defined yield points, some of the more recent high tensile alloy steels and also the light alloys of aluminium, e.g. duralumin and R.R. alloys, and of magnesium, e.g. Elektron alloys, show no proper yield point. Thus, the straight portion of the stress-strain line representing the elastic condition passes gradually to the plastic curve part, so that it is difficult to determine that point on the curve which corresponds to the limit of proportionality of strain to stress.

As it is necessary to determine the value of the stress to which the material can safely be loaded, in connection with the design of structures, some other method of assigning stress values must be employed in such cases. The principle adopted is to evaluate the stress corresponding to a certain allowable amount of plastic deformation, after the limit of proportionality has been passed. This stress value is termed the *Proof Stress* and is broadly defined as the stress at which the material has been given a definite small amount of plastic deformation. In specifications of materials for structural purposes this plastic deformation is expressed as a certain percentage of the gauge length.

In many, but not all, material specifications *this plastic deformation is defined as* 0·1 *per cent of the gauge length*, i.e. for a gauge length of 2 in. the deformation in question would be 0·002 in.

The British Standard Specifications define the proof stress as that stress at which the stress-strain curve departs by 0·1 per cent of the gauge length from the straight line of proportionality (for light alloys). The material is deemed to have passed the proof stress test if, when the proof stress is applied for a period of 15 secs. and removed, the specimen will not show a permanent set greater than 0·1 per cent of the gauge length.

The most accurate method of determining the value of the proof stress is to plot a sufficiently large number of stress-strain values to enable an accurate curve to be drawn through these points, in a similar manner to the results* shown in Fig. 36. In this method the material is first given *an initial tensioning stress*—usually about 20 to 25 per cent of the specified minimum proof stress—so that the elastic part of the stress-strain curve does not commence at zero stress but at some other value above zero, as defined by the lower point *a* in Fig. 36. The line *aa* is then drawn, as shown, through the elastic portion of the curve.

Next, a parallel line *bb* is drawn to the right of *aa* at a distance

---

* B.S.S. No. 485—1934. Testing of Thin Sheet Metal and Strip.

along the strain axis equal to the specified percentage of the original gauge length. Thus for the 0·1 per cent of the 2 in. gauge length proof stress specification the distance ab would be 0·1 per cent of 2 in., i.e. 0·002 in. The value of the stress P corresponding to the point b where bb cuts the stress-strain curve gives the proof stress. The value Q corresponding to the limit of proportionality divided by the area of the specimen gives the elastic limit value.

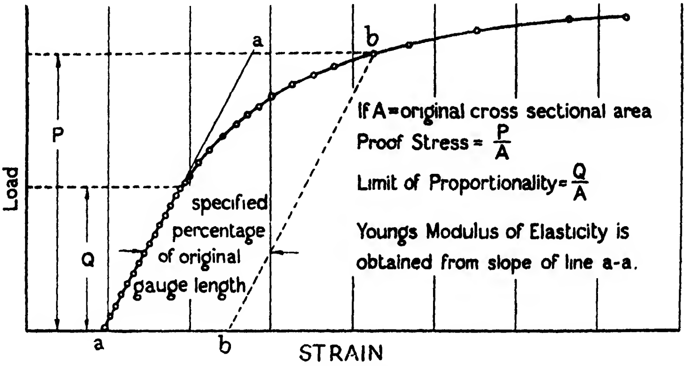

FIG. 36. ILLUSTRATING BRITISH STANDARD DEFINITION OF PROOF STRESS

Total Deformation of Specimen

In considerations of proof stress it is important to be able to determine the actual deformation of the specimen at the proof stress value.

This deformation is partly *elastic* and partly *permanent*. When the specimen is tested in tension up to the proof stress and the latter is then released the specimen recovers from its elastic stretch but retains its permanent deformation.

Fig. 37 shows the stress-strain curve OAB for a typical material. Here the proof stress is given by the point F and the total elongation by $CF = CE + EF$. The total elongation at the limit of proportionality A, however, is DA, so that it is incorrect to add this value DA to the permanent stretch AH in order to obtain the deformation at the proof stress F. It will be seen that the actual total deformation at F is greater than the amount DH by GF.

The Four-point Method for Proof Stresses

For routine tests of materials employed in engineering it would be too laborious to make a series of load-extension tests upon each specimen and then estimate the proof stress from the graphs thus obtained, so that to shorten the period required and at the same time to produce definite and reliable results the method devised by Lindley of the

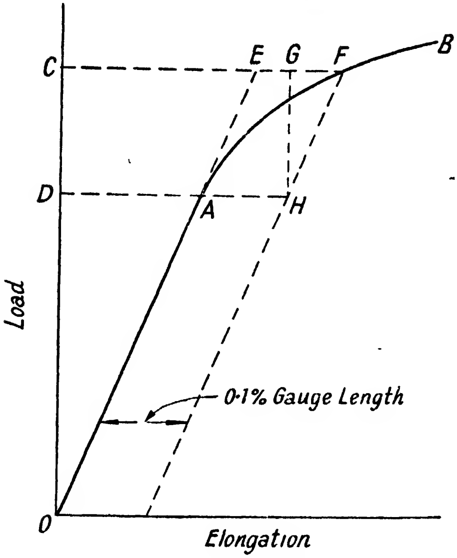

FIG. 37. PERMANENT DEFORMATION OF TEST PIECE

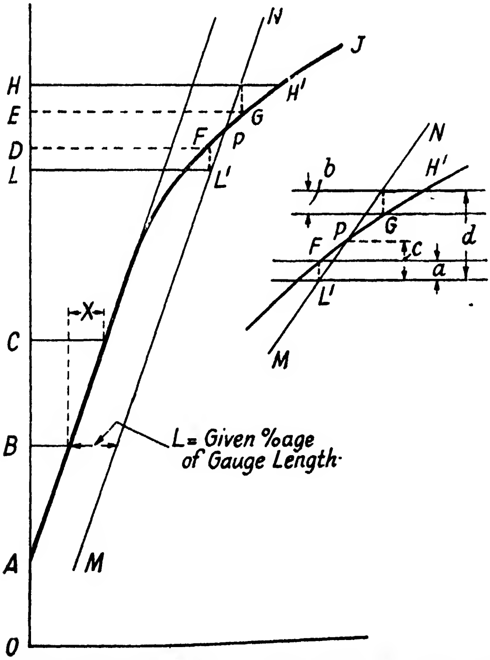

FIG. 38. THE FOUR-POINT METHOD FOR DETERMINING PROOF STRESS

A.I.D. in conjunction with several of the Sheffield testing institutions, known as the *Four-point Method*, has been adopted.

In most proof stress specifications both an upper and a lower proof stress are specified, but the method can be employed if only the lower proof stress is stated, by using an assumed upper limit selected from a practical or experimental knowledge of the behaviour of the material.

In Fig. 38 the stress-strain curve is indicated at $AFGJ$. It should be noted, however, that in the four-point method the stress-strain curve is not actually drawn, but is here given solely for explanation purposes.

In making a test the specimen is first subjected to an initial tensioning load OA, the value of this load, as previously stated, being from 20 to 25 per cent of the minimum proof stress. The load is then increased by an amount AB and the extension at this load OB measured. The load is then increased again to a value represented by C on the elastic stretch part of the curve and the extension at C measured. In practice it is usual to set the extensometer to give zero reading at B and thus to measure the difference of the extensions at C and B as indicated by the dimension X.

The stress is now increased gradually until the extension reaches the value given by the following relation.

$$\text{Extension} = \frac{AL}{BC} \cdot X + L$$

where L is the extension specified for the material and AL represents the lower specified proof stress value.

The stress corresponding to this value of the extension is represented by the point F on the curve.

Next, the stress is again increased steadily until the extension reaches the value given by the following relation.

$$\text{Extension} = \frac{AH}{BC} \cdot X + L$$

where H represents the upper or higher specified proof stress.

The stress corresponding to this extension is represented by the point G on the curve.

It will be noted that the line MN is drawn parallel to the straight or elastic portion of the stress-strain curve and at a distance L from it.

Having thus obtained the two points F and G on the curve, the value of the actual proof stress P is given by the intersection of the line $ML'N$ with the portion FG of the curve.

As mentioned previously, it is unnecessary to draw the stress-strain curve, or even the portion FPG under consideration for the height of P above the lower specified proof stress line LL' is readily shown to be given by the following formula, using the notation given in the smaller right-hand diagram—

$$c = \frac{ad}{a + b}$$

where d = proof stress range $(OH - OL = HL)$

a = amount that stress at F is above lower limit.

b = amount that stress at G is below lower limit.

c = amount that actual proof stress is above lower limit.

Thus *actual proof stress* = $OL + c$.

An example of a stress-strain diagram reproduced from an actual record obtained with an Olsen high magnification recorder in the case of a round steel specimen of 0·505 in. diameter (0·2 sq. in.) is given in Fig. 39, but to a reduced scale. Whilst for approximate purposes the elastic or proportional limit may be taken at some value, such as the

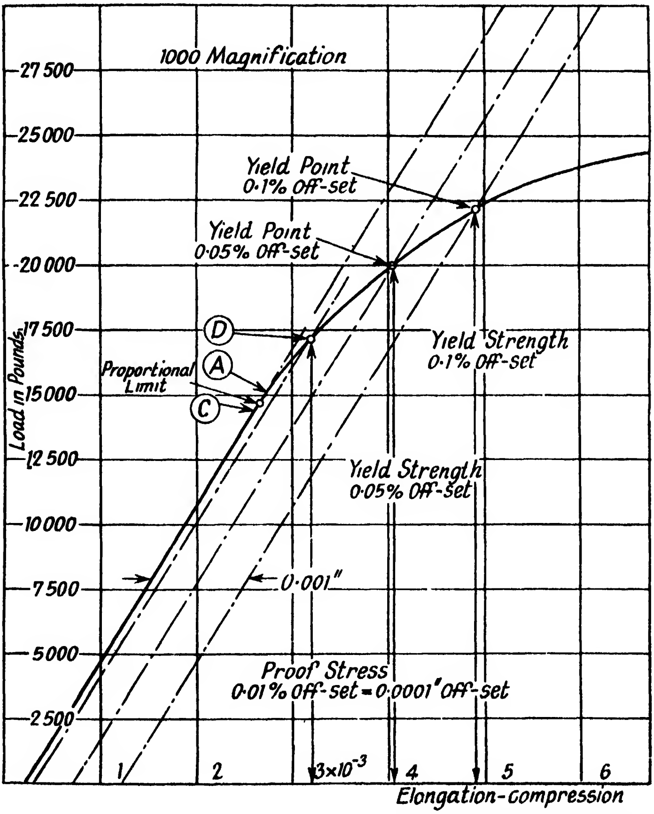

FIG. 39. TYPICAL PROOF STRESS AND YIELD STRENGTH DIAGRAM

14,600 lb. load between the points A and C at the end of the straight part of the graph, the proof stress value at $\frac{1}{100}$ of 1 per cent (0·0001 in.) offset is taken as the standard for U.S. Army and Navy requirements, and is shown by the point D on the graph.

Yield Strength

In the case of materials having a continuously curved stress-strain graph with no definite elastic limit or yield point it is usual to state the yield strength value at some definite percentage of the strain, such as 0·05 or 0·10 per cent, and to use this value of the stress in certain material specifications. Thus, in the case of the graph reproduced in Fig. 39 the values of the yield strength at 0·05 and 0·10 offset, obtained by drawing parallel lines at the appropriate strain values, are shown on the curve, at load values of 17,000 and 22,000 lb. respectively. As the specimen had an area of 0·2 sq. in., the corresponding yield stress values are 85,000 lb. (38 tons) per sq. in. and 110,000 lb. (49·3 tons) per sq. in., respectively.

The Beaumont Proof Stress Indicator

In order to facilitate the determination of actual proof stress values and to obviate the necessity of making calculations, using the formula given previously, the apparatus shown in Fig. 40 was devised by R. A. Beaumont.* The device automatically solves the formula $c = \frac{ad}{a+b}$ and all that is necessary for the operator to do is to determine the values of the two stresses $S_1 = OD$ (Fig. 38) and $S_2 = OE$. The cursor and sliding arm of the indicator are set to the two positions and the actual proof stress is read off.

If the first stress S_1 falls under the lower limit, or the second stress S_2 is above the upper limit, the proof stress can still be, within limits, indicated accurately by the instrument. To find the proof stress after having ascertained stresses S_1 and S_2 according to the four-point method, move the cursor so that the horizontal line is located on the ordinate S_1 at the particular stress. Leaving the cursor set at stress S_1, move the free end of the arm until the line on it is located at stress value S_2 on the particular vertical ordinate marked with the elastic extension obtained for the 3 tons per sq. in. stress increment during the initial part of the four-point test. The proof stress is then given by the point of intersection of the line on the arm and the inclined line drawn from the particular vertical S_2 ordinate.

An example of the use of the indicator is illustrated in Fig. 40 for the aluminium alloy $L3$, the proof stress limits of which are given as 15 to 18 tons per sq. in. and gauge length 2 in.

---

* Manufactured by J. E. Baty & Co., Ltd., London.

The tensioning stress is 3 tons per sq. in. The extensometer used was the Lindley one* and the dial was set to zero after the tensioning stress was applied. A stress increment of 3 tons per sq. in. was then made, the extensometer dial reading being 25 divisions. The corresponding values of the stresses S_1 and S_2 were 16 and 17 tons per sq. in., and the indicator, as shown in Fig. 40, was set to these values.

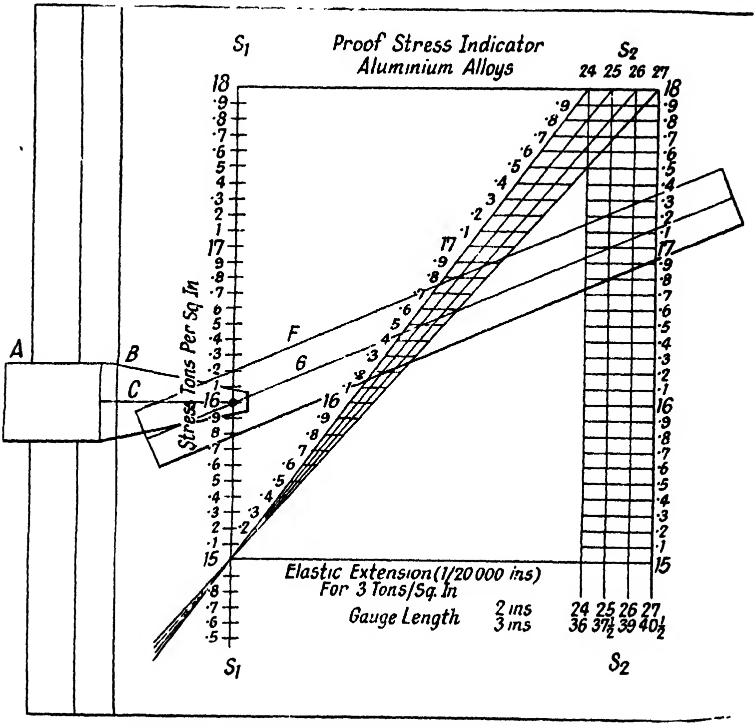

FIG. 40. THE BEAUMONT PROOF STRESS INDICATOR

The indicator shows that the actual proof stress is 16·5 tons per sq. in.

The indicator is supplied with a series of charts covering the full range of light alloys (aluminium and magnesium) and the alloy steels.†

Behaviour of Typical Metals in Tension

The tensile properties of iron, carbon, and alloy steels are shown in Fig. 41, the curves representing typical test results for the materials

---

* *Vide* page 423.

† For a fuller detailed account of the determination of proof stresses and the use of the Beaumont indicator the reader should consult *The Mechanical Testing of Metallic Materials*, by R. A. Beaumont (Pitman, London).

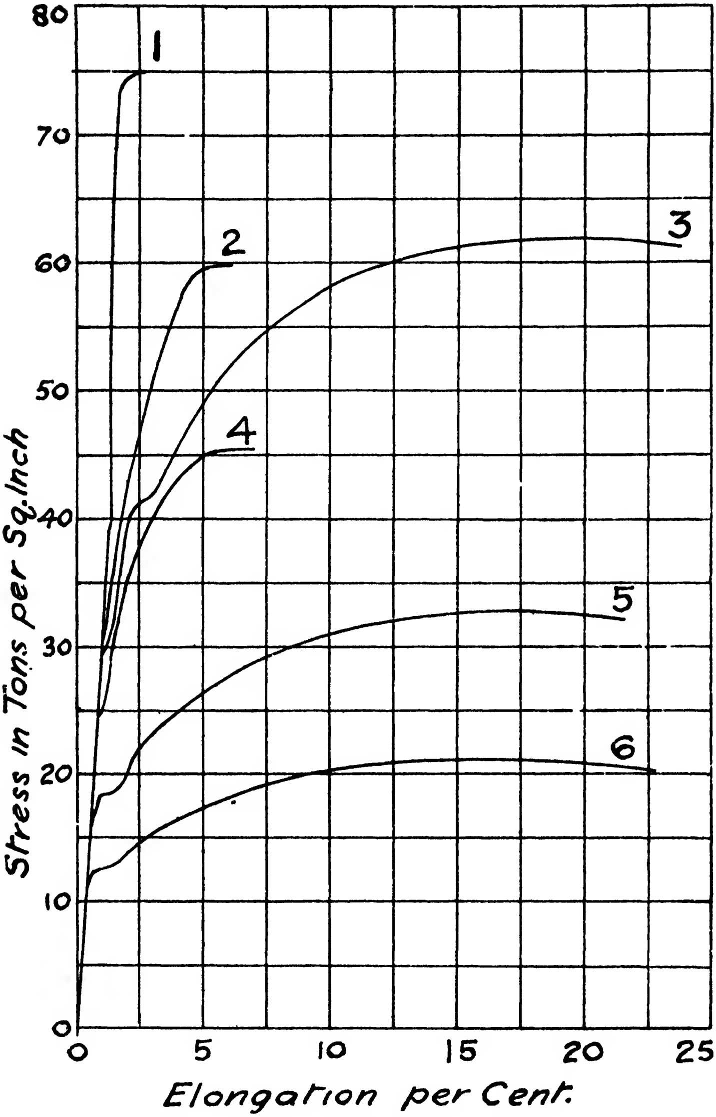

FIG. 41. TENSILE STRESS-STRAIN CURVES

1 = nickel-chrome steel, air-hardened
2 = tool steel, unannealed
3 = nickel-chrome steel, unannealed
4 = crucible steel, untreated
5 = mild steel
6 = wrought iron

shown. It will be observed that the elastic portions of the curves are nearly the same for all of the metals, although the scale is too small to show any small differences; the elastic moduli for these materials are therefore approximately the same.

TABLE 11

Properties of Non-Ferrous Alloys and Metals*

Material	Tons per Square Inch			Elongation per cent on 2 in.	Reduction in Area, per cent
	Elastic Limit	Yield Point	Tensile Strength		
Aluminium (cast)	—	—	5–5½	2–3	—
Aluminium (rolled, along grain)	4½	-	6½–7½	25·0	—
Aluminium (rolled, across grain)	6	- -	6¾–8	10–13	—
Aluminium bronze (10 per cent)		-	38½	26·3	28·0
Copper (cast)		--	7–9	10–15	—
Copper (rolled)	-	---	17½	10·0	49·0
Copper (drawn wire)	-	—	24–28	0·8–2·0†	—
Delta metal No. 1 (cast)		—	41·3	20·0	20·4
Delta metal No. 1 (extruded)		-	49·8	26·0	24·9
Delta metal No. 4 (cast)	-	-	23·9	21·0	20·1
Delta metal No. 4 (extruded)		-	37·1	27·0	20·0
Duralumin sheet (normal)	16·5		27·5	15·0	--
Duralumin sheet (hard)	20·0		31·0	11·0	—
Duralumin rod (normal)	16·5		26·0	18·0	—
Duralumin rod (hard)	21·0	-	32·0	8·0	—
Duralumin wire (normal)	16·5	-	26·0	19·0	—
Duralumin wire (hard)	22·5		35·0	8·0	—
Gunmetal (cast) (copper, 87; tin, 10; zinc, 3)	7·8	—	13·15	10·0	20·0
Gunmetal bars	-	14–15	28–30	10·0	20·0
Naval brass (aero)	-	12–13·5	24–27	30·0	—
Phosphor bronze (rolled) (copper, 93; tin, 6·5; zinc, 0·5)	—	26–30	30–35	5·0	—
Manganese bronze (cast) (copper, 58; zinc, 38; aluminium, etc., 4)		13–14	30–35	15·0	—
Muntz metal	-	—	23–26	35·0	59·6
Yellow brass	--	-	24	41·0	61·0
Cast brass	-	- -	10–13	24·0	16·4

In the case of cast iron, high carbon and alloy steels,‡ the yield and elastic points are usually very indefinite, and the curve at these values is very smooth as compared with that of mild steel, so that it is difficult to detect the points of elastic and yield stresses.

---

* For fuller particulars, see Vol. II of this work, *Non-Ferrous and Organic Materials.*

† On 8-in. lengths.

‡ The effects are most enhanced in the hardened and tempered steels, more especially in the high-tensile steels shown in Table 10.

For very hard steels, such as air-hardened nickel-chrome (of tensile strength 100 to 120 tons per sq. in.), there is no true elastic limit, or if one exists it occurs at a very low value, usually below 25 tons per sq. in.

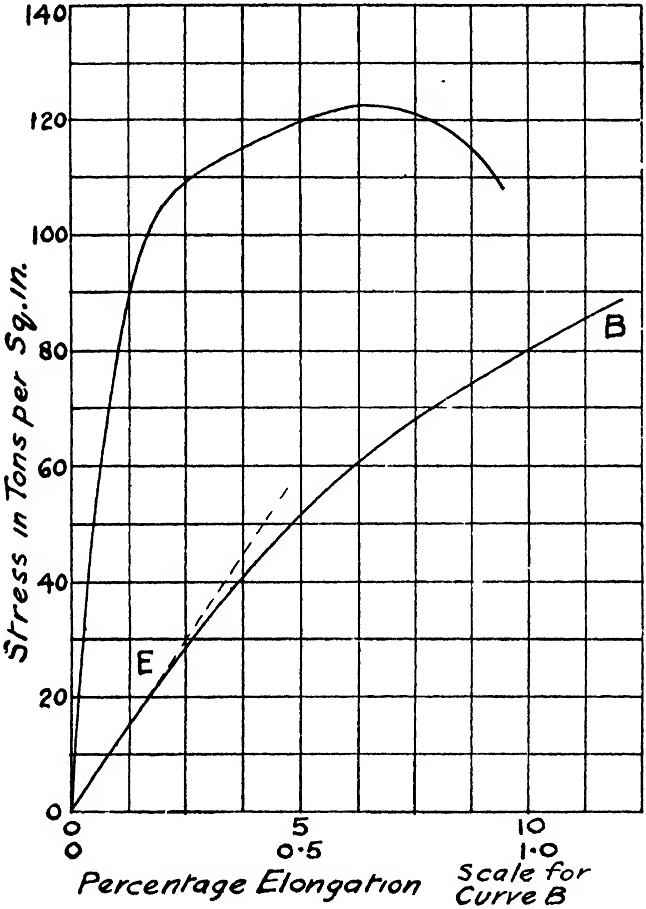

FIG. 42. STRESS-STRAIN CURVE FOR HARDENED NICKEL-CHROME STEEL (AIR-HARDENED AT 800° C.)

E = elastic limit. Curve *OEB* shows the strains magnified ten times

Typical curves for a nickel-chrome steel, which has been air-hardened after heating to 800° C., are shown in Fig. 42. The composition of this steel is given in Table 12.

The results given in Fig. 42 show that whilst the maximum stress is about 123 tons per sq. in., the elastic limit has the relatively low value of about 20 tons per sq. in.

TABLE 12

Composition of Nickel-chrome Steel—Air Hardening (Percentages)

Carbon	Silicon	Sulphur	Phosphorus	Manganese	Nickel	Chromium	Iron
0·33	0·34	0·041	0·032	0·47	3·54	1·84	93·407

Tensile Tests on Non-Ferrous Metals

Fig. 43 shows some typical tensile stress-strain curves for a few non-ferrous metals. These are included here for comparison purposes.

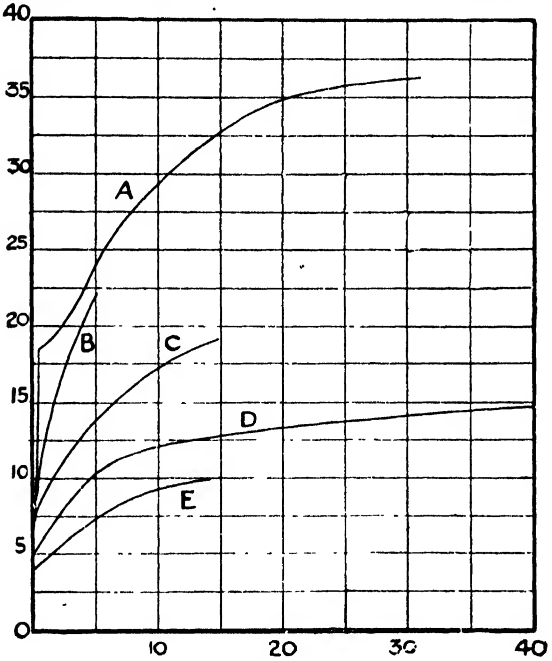

FIG. 43

A = aluminium bronze
B = hard brass
C = annealed brass
D = rolled annealed copper
E = rolled aluminium

In most cases there is no very definite elastic portion of the curve, although there is usually a fairly well-defined yield point.

The above curves should be taken as being typical ones* only,

---

* Fuller particulars of the strength properties of non-ferrous metals and alloys are given in Vol. II of this work.

for the properties of these metals vary considerably with their composition, treatment, and method of manufacture. The rather indefinite and low elastic limits in the case of aluminium and copper are related to the plastic properties of these metals, for they flow almost continuously from the commencement of the tensile test.

Ductile Materials in Compression

Compression tests are usually made upon specimens in which the length is about the same as the minimum width, otherwise failure by buckling occurs.

Ductile materials tested in this manner tend to flow outwards under the compressive load, and as the load increases the area of specimen also increases due to this lateral flow, and a state of affairs is soon approximated to in which the ratio $\frac{\text{load}}{\text{area}}$—that is, the compressive stress—becomes nearly constant. The more ductile, or plastic, the material, the more nearly constant does the stress become.

Thus, for a plastic material, like lead, the stress is practically constant, in compression. Experiments made by Hick upon lead cylinders $2\frac{1}{2}$ in. long by 2 in. diameter, with loads varying up to $5\frac{1}{2}$ tons, showed a progressive reduction in length down to 1·128 in., and increase in diameter at the centre of 3·16 in. The stress after the first ton or so remained approximately constant at 0·72 ton per sq. in.

Unwin has shown that the compressive stress in plastic materials can be approximately represented by the formula—

$$p = P(1 - \lambda)/w$$

where p/λ = the modulus of elasticity, P the total load, and w the cross-sectional area. p is known as the plastic stress, λ is the compression per unit length.

Fig. 44 shows the stress-strain curves for lead, copper, mild steel, cast iron, and gunmetal.

The Modulus of Elasticity

It has been shown in an earlier chapter that for materials stressed within the elastic limit, i.e. obeying Hooke's law, the strain produced is proportional to the stress causing it. Expressed in symbols, we have—

$$e = \frac{p}{E}$$

where e = strain per unit length, p = stress per unit area, and E = modulus of elasticity.

It is usual to express these quantities in pound-inch or ton-inch units.

Table 1 on page 10 gives some typical values of E for different metals.

The value of the elastic modulus E is important in the calculation of strains, so that for different materials it should be known accurately.

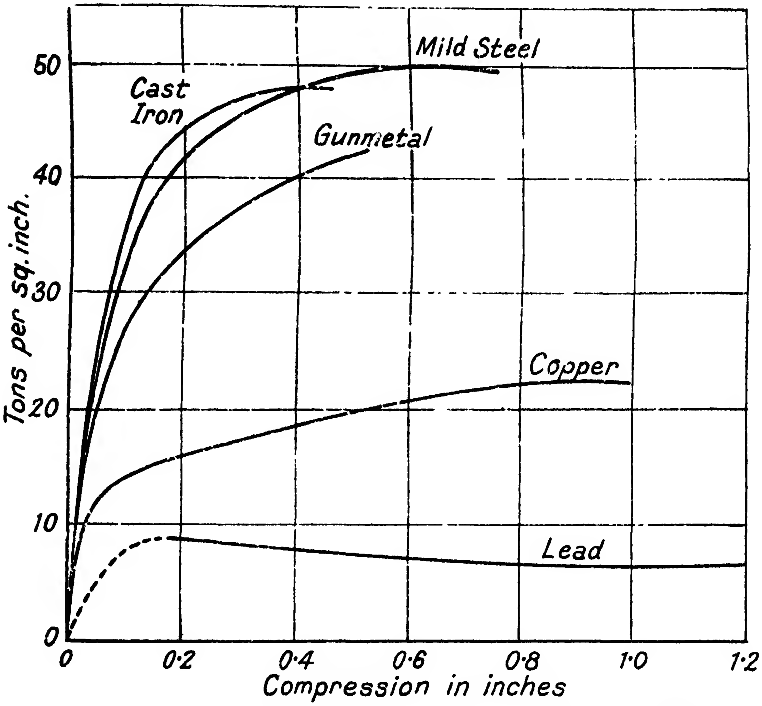

FIG. 44. COMPRESSION STRESS-STRAIN CURVES FOR DIFFERENT METALS

The stress-strain curve enables the value of E to be obtained in a simple manner. It is only necessary to consider the straight portion of the curve corresponding to stresses within the elastic limit, and to measure its slope; this value multiplied by a constant gives E. Referring to Fig. 45, the point A represents the limit of elasticity, and p and e the stress and elongation values, respectively, at A.

The value of the elastic modulus E is then given by

$$E = \frac{p}{e} . k = k . \tan \theta$$

If p = stress in tons per sq. in., and e = strain expressed as a percentage of the length of specimen, then $k = 1$. Since the angle θ is usually one approaching a right angle, the value of tan θ will be represented by a high number, for tan 90° = infinity.

The modulus of elasticity is generally defined as being for *tension* or *compression*, according to the material in question; its value for most homogeneous metals is the same in both cases.

✓ In the case of cast iron and other cast or brittle metals, the stress-strain relation is not a straight line for the material does not follow Hooke's law; the stress-strain line is then a curved one (Fig. 46). There is therefore no definite elastic modulus value. [illegible]

For strain calculation purposes it is necessary to express the elastic modulus value for some particular value of the stress (it is usual to define a safe or working stress). Then the value of E used may be taken as that given by the ratio $\frac{AB}{BO}$. It will be seen that the tangent at C is parallel to the line OA and therefore that the value of E obtained is correct for the point C. Actually, the value of E at any point is given by $E = \frac{dp}{de}$, where $p = \phi(e)$* is the equation to the stress-strain curve. It is usual to take the stress ordinate AB as one-quarter of the compressive stress of the material, for cast iron. ✓

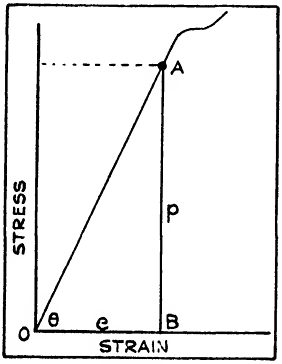

FIG. 45. ILLUSTRATING METHOD OF ESTIMATING ELASTIC MODULUS

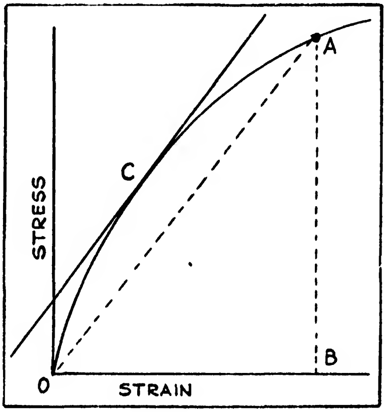

FIG. 46. ELASTIC MODULUS FOR BRITTLE MATERIALS

Notes on the Elastic Modulus

It has been found, by experiment, that for a given material the value of E depends to some extent upon its history, i.e. the heat or mechanical treatment that it has been subjected to.

---

* Most stress-strain curves can be expressed in the form $p = ke^n$.

Thus, if mild steel has been stressed beyond the elastic limit the value of E is less than that within the elastic limit. Again, if steel has been stressed several times within the elastic limit it may have the value of E raised slightly. The value of E also shows a small variation with the heat-treatment. For example, in the case of 3 per cent nickel steel (C = 0·25), the elastic modulus E was 4 per cent higher when the steel was heated to 900° C., quenched in water and tempered at 760° C., than when quenched from 860° C. and tempered at 760° C.

Generally speaking, however, the variation in the value of E due to heat-treatment is not appreciable and may safely be neglected for ordinary calculation purposes. It may be mentioned that the maximum variation in E occurs for heat-treated alloy steels, the variation for most straight carbon steels being practically negligible.

The Modulus of Rigidity

The modulus of rigidity, as previously mentioned, refers to the elastic strain of the material under shear stress.

Its value is obtained in a similar manner to the tensile stress elastic modulus E by plotting shear stresses against shear strains, within the elastic limit, and finding the slope, or ratio of shear stress to strain. The shear stress, in the case of a circular specimen of diameter d in. under torsion, is estimated from the applied torque T in.-lb. by the well-known relation

$$q = \frac{16T}{\pi d^3} \text{ where } q = \text{ shear stress in lb. per sq. in.}$$

The torsional strain, expressed in radians, for the given torque T is measured by means of a torque-meter, calling this angle θ radians, we have

$$\text{Elastic modulus of rigidity } C = \frac{q}{\theta} = \frac{16T}{\pi d^3 \theta}$$

As all the quantities in the right-hand expression can be measured, the value of C can be determined.

Another method that is applicable to materials in the form of wires depends upon the measurement of the time of vibration when the wire is fixed at one end loaded at its lower end, and made to oscillate about its vertical axis.

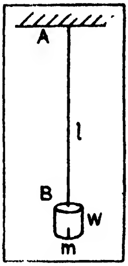

FIG. 47
METHOD OF FINDING THE MODULUS OF RIGIDITY OF A METAL

Referring to Fig. 47, the wire AB, of length l in. and diameter d in., is fixed at its upper end A and loaded with a cylindrical weight W as shown. The weight is set into torsional oscillation about its vertical axis, and the time of oscillation observed by noting the swings of the fixed mark m in a given time.

If t = time of one complete oscillation, I = moment of inertia of cylinder about its central axis, C = modulus of rigidity, and g = acceleration due to gravity, it can be shown that

$$C = \frac{128\pi l I}{g \cdot d^4 \cdot t^2}$$

As all the quantities on the right-hand side are known, the value of the rigidity modulus C can be calculated.

Other methods of estimating C will be found in J. A. Ewing's *Strength of Materials*.*

Utilization of Tensile-test Results—The Quality Factor

The tensile-test results readily obtained include the ultimate stress, the elongation, and reduction of area. Various methods have been suggested for combining these factors in such a manner that the result, or "quality factor," expresses both the strength and the ductility of the material, or the ductility alone.

Tetmajer proposed the formula—

Quality factor = tensile strength × percentage elongation . (A)

whereas Wöhler suggested the formula—

Tensile strength + percentage contraction of area . . (B)

Another formula which is sometimes used in this country is—

Quality factor = tensile strength + percentage elongation on given length . . . . (C)

For a good quality of steel forging its value is from 55 to 60, and for high-grade mild steel 50 to 57; for locomotive axle steel it varies from 68 to 76. The quality factor is often specified in connection with material contracts.

For example, the ductility of gunmetal bars, for special purposes, is sometimes specified by a quality factor = percentage elongation on 2 in. + percentage reduction of area, which must exceed 26 per cent; for medium duralumin bar this factor exceeds 30 per cent. It should be noted, in connection with this type of specification, that the quality factor often depends upon the size of the plate or bar from which the specimen is taken. Thus, for mild steel (0·3 carbon) plates of $\frac{1}{4}$ in., $\frac{1}{2}$ in., and $\frac{3}{4}$ in. thickness, respectively, the quality factors (C) are 61, 57, and 55 respectively.

Time Influence in Tensile Tests

✓ As mentioned earlier in this chapter, if the tensile load be applied slowly to a steel or iron specimen, the final elongation for the same

---

* Cambridge University Press, Ltd.

stress value will be much greater than if the load is applied quickly; this effect is due to the greater flow of metal which the longer period of the former test permits.

If, however, the load be applied in a series of steps with long time intervals between, there will be a new and higher yield point, a higher breaking load, and a smaller extension. ✓

In a test of this kind upon two similar mild steel specimens, one of which was successively loaded at the rate of $\frac{1}{10}$ of the ultimate load at intervals of 3 min., whilst the other was loaded by the same amounts once every 1,200 min., the former broke at 90 per cent of the stress value of the latter, but its extension was 25 per cent, whereas that of the latter was only 8 per cent.✓

Again, if a steel or iron specimen be stressed to just beyond the elastic limit, and the load be then removed, there will, of course, be a permanent elongation when the load is taken right off: but if now the load be applied again, without any appreciable time interval, it will be found that there is a new yield point at about the stress value reached by the previous load just before it was taken off, as shown by the curve* *bc* in Fig. 48. If, however, there is an appreciable time interval, say of several hours, between the two loadings, a still higher yield point *d* will be reached.

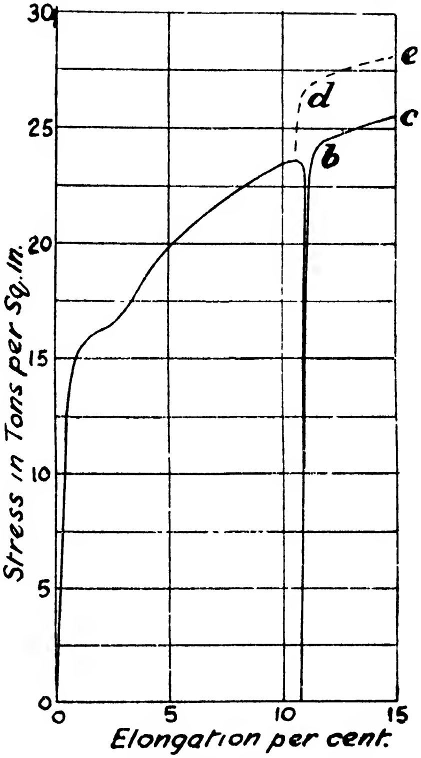

FIG. 48 ILLUSTRATING THE TIME INFLUENCE EFFECT

The effect of repeated stressing beyond the original steady loading elastic limit is also to raise the ultimate strength and to reduce the final elongation; these effects appear to be connected with a process of work-hardening of the metal.

The material, after such overstraining, loses much of its original elasticity, and even small stresses appear to cause permanent set after

---

* *Vide The Strength of Materials*, p. 34, J. A. Ewing.

the load is removed, although it is true that there is a partial return to its elastic condition after an interval of a day or two. There is no true elastic limit immediately after overstraining, but if a long period of rest is allowed, the elastic limit becomes more definite and at a higher value.

Hysteresis

Overstrained steel or iron also exhibits the property of hysteresis, when the load is applied gradually to a certain value and taken off at about the same rate. This effect is due to the imperfect elasticity, and the longer the period of time allowed, the less the hysteresis.

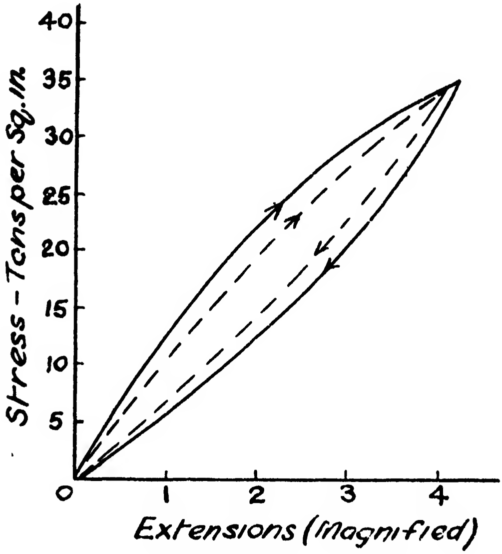

FIG. 49. HYSTERESIS EFFECT IN STEEL

The stress-strain curves for an overstrained material take the form of a closed loop, as shown in Fig. 49.

The area of the loop represents the work done on the material, in altering its internal condition; it might be termed the energy wasted internally, due to its imperfect elasticity.

The effect of very slow loading, and unloading, is indicated by the dotted lines in Fig. 49.

Effect of Temperature on Recovery of Elasticity*

When an overstrained piece of steel or iron is heated for a few minutes in boiling water, it will be found to have recovered its

---

* *Vide* paper by J. Muir in *Phil. Trans. Roy. Soc.*, 1899.

elasticity, whilst it will have a higher yield point than the overstrained load value. A bar of mild steel which is stressed to just beyond the yield point, and then heated to 100° C. for a few minutes, then stressed again to the new yield point, and reheated to 100° C., and so on, will break at a higher load value than in the ordinary way, and the fracture will be found to resemble that of a hard steel, such as cast steel. Moreover, the extension and area contraction are very much smaller than in the ordinary test.

Annealing ✓

When an overstrained piece of steel or iron is heated to redness—that is to say, to from 850° to 950° C.—and is allowed to cool fairly slowly, by immersing it in a bed of ashes, sand, or other non-conducting material, it will be found to have recovered its original state of elasticity, its original yield point, and tensile strength.

This process is employed commercially for removing manufacturing and local hardening strains, such as those remaining in bent sheet metal work and cold stamping, in removing local punching and shearing hardnesses, for softening hard-drawn wire, etc.

Local Hardening Effect of Shearing and Punching ✓

When a bar or piece of steel plate is punched or sheared, the metal around the punched hole or about the sheared edge is badly deformed, and in consequence is considerably harder than that of the rest of the bar or plate.

This local hardening has a marked detrimental effect upon the tensile strength and elongation, for if a flat strip of steel having a punched hole be tested in tension, it will be found to break at a lower stress value than that for a plain drilled plate of the same material. Although experiments upon punched plates are not altogether concordant, yet they generally agree in showing a loss of tensile strength of from 5 to 20 per cent in iron, and of from 8 to 35 per cent in steel plates. The greater the thickness of the plate, the less the tensile strength loss from this cause.

The reason for the above effect is that the hardened metal around the hole receives a greater stress intensity, owing to the fact that it is unable to stretch so much as the rest.

The effect of a sheared edge in the case of a metal plate is similar in causing premature fracture at a lower breaking load.

✓ The effects of local hardening around punched holes may be obviated by annealing, or by reamering the hole, after punching; in the case of a sheared edge the hard metal may be removed by planing, or softened by annealing. ✓

✓ The commercial method of making square or other shaped holes by broaching or cold drifting round holes results in a similar local hardening around the holes.✓

✓ Effect of Drilled Holes in Plates

The ultimate tensile strength of a steel or iron plate having a single hole, or a row of holes perpendicular to the line of pull, has been found to be from 8 to 12 per cent greater than that of the undrilled plate material; the fracture occurs across the holes. It is believed that the prevention, by reason of the form of the metal near the holes, of local contraction causes a higher tensile strength. Further information on the stress distribution in drilled plates is given in Chapter XVI.

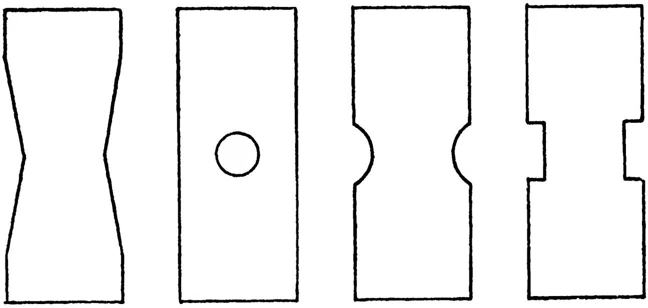

Fig. 50

✓ Effect of Shape of Test Piece

For exactly the same reason as in the preceding case, the tensile strength of specimens shaped as shown in Fig. 50 will be greater than that of parallel specimens. It may be here mentioned that in ductile materials such as wrought iron or mild steel the length of the part which is affected by local contraction is from 6 to 8 times the greatest transverse width, so that for accurate tests the specimen should have a parallel length of at least 8 times its greatest transverse dimension.

The effect of a flaw, nick, or crack, in a specimen is to cause a local stress distribution which is not uniform around the defective part; such a specimen will yield more by tearing, and the fractured surfaces will present a crystalline appearance, as distinct from the usual fibrous form of fracture of ductile materials. The same remarks apply for other types of stress, such as those caused by impact, repetition of loads, and bending.

CHAPTER III

THE TESTING OF CAST IRON

Cast Iron

CAST iron is a material which has no real yield point, or elastic limit, as the continuously curved stress-strain diagram shown in Fig. 51 indicates.

Cast iron, being a brittle material, breaks with little extension, and at a low tensile strength, usually from 8 to 12 tons per sq. in. for plain iron.

Owing to its very low elastic limit, or to its absence of a true elastic limit, cast iron takes a definite set for very small stress values, as indicated by the dotted lines in Fig. 51.

The relation between the stress and strain in both tension and compression for cast iron is given by Hodgkinson as follows, namely—

$$\text{For tension } f_c = 6220e - 1{,}298{,}000e^2$$

$$\text{For compression } f_c = 5573c - 233{,}500c^2$$

where f_t and f_c are in tons per square inch, and e and c are the relative extensions and compressions per unit length.

Unwin gives the following more exact relations between the same quantities—

$$e = 1{\cdot}503 f_t^3 \times 10^{-6} + 1{\cdot}685 f_t \times 13^{-4}$$

$$c = 9{\cdot}66\ f_c^3 \times 10^{-8} + 1{\cdot}782 f_c \times 10^{-4}$$

It has been found that the strength of cast-iron bars varies with their size, the smaller diameter bars being the stronger; the difference between bars varying from 1 to 3 sq. in. is about 25 per cent.

In Fig. 51 only a portion of the compression curve is shown, as the ultimate strength of ordinary grey cast irons in compression is from 40 to 50 tons per sq. in.—that is to say, from 3 to 4 times the tensile strength.

Mechanical Properties of Typical Cast Irons

The tensile strength of *grey cast irons* varies from 8 to 14 tons per sq. in. according to the composition, shape and size, method of casting, etc.

The *white cast irons* have tensile strengths from 12 to 18 tons per sq. in. with corresponding compressive strengths of 40 to 80 tons per sq. in.

The nickel-chromium *alloy cast irons* employed for automobile cylinder blocks usually have tensile strengths ranging from about 15 to 23

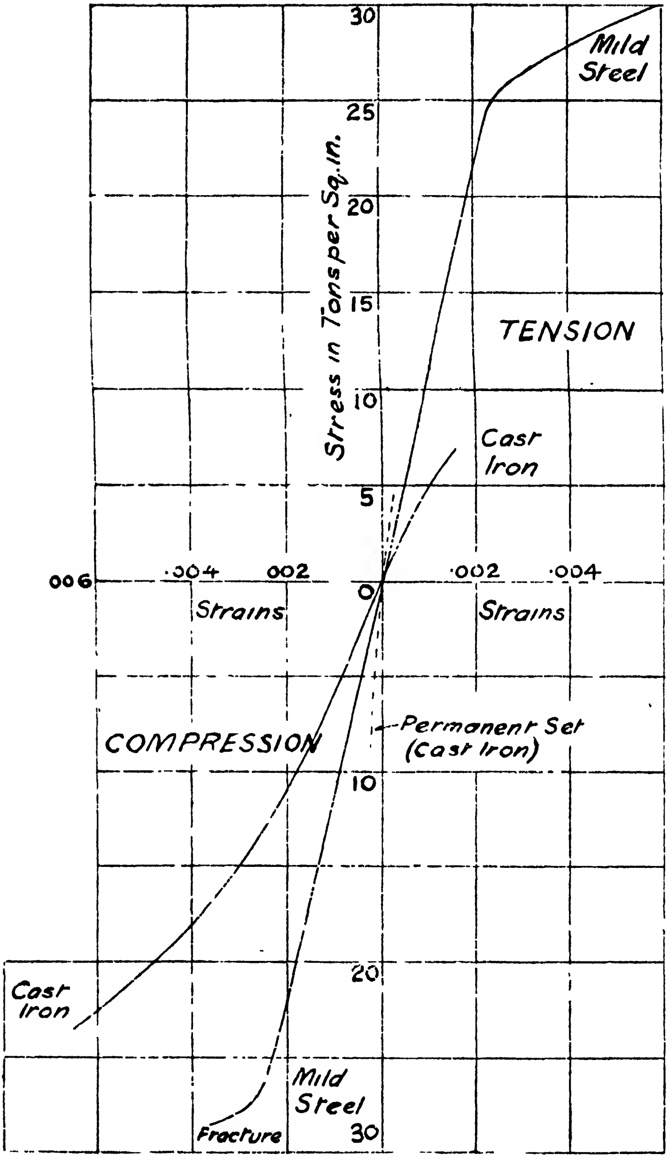

FIG. 51. ILLUSTRATING BEHAVIOUR OF CAST IRON IN TENSION AND COMPRESSION

tons per sq. in. (in the heat-treated condition), whilst heat-treated alloy irons,* such as those containing chromium and molybdenum, show values of 19 to 26 tons per sq. in. A further example of a modern high strength alloy cast iron is that of Ni-Tensyl, which has tensile strengths of 25 and 30 tons per sq. in., in the plain and heat-treated conditions, respectively.

In regard to the *compressive strengths* of modern *high-duty cast irons*, these range from 60 to 90 tons per sq. in.; higher values are obtained from certain alloy cast irons in the heat-treated condition. The compressive strengths of these irons are usually from 3 to 4 times their tensile strengths.

The *elastic modulus* of cast iron is often determined from the deflection value obtained in the transverse test (described later) and in this connection the British Standards Institution† recommends that the modulus should be calculated on the deflection for a load not greater than one-quarter of the breaking load in the transverse test. As this deflection is very small, namely, of the order of a few hundredths part of an inch for the smaller test bars, it should be measured by precision methods. More accurate results are obtained by separating the deflection into plastic and elastic components.

The modulus of elasticity for cast iron increases roughly in proportion to the tensile strength. Thus, a grey cast iron with a tensile strength of 10 tons per sq. in. gives a modulus of 10 to 14 × 10^6 lb per sq. in., whilst a high-duty cast iron of 20 to 24 tons per sq. in. gives from 19 to 23 × 10^6 lb. per sq. in. Proportionately higher figures are given with the higher grades of alloy cast iron.

The impact strength of cast iron, as determined by the Izod test method, is normally of too low a value for accurate measurement, but by the use of larger test bars it has been established that the high-duty cast irons now in use show some 4 to 6 times the impact strength values of the ordinary lower grades.

No doubt the torsion impact test used for heat-treated alloy steels, e.g. tool steels, and discussed elsewhere in this volume, would appear to be more suitable than the Izod method for cast irons. It may be mentioned that in 1944 a British Standards Institution Panel was considering the matter of evolving a standard impact test for cast iron along the lines of a modification of the Izod test.

The *fatigue strength* of cast iron as determined by the Wöhler or rotating beam method appears to be from 0·4 to 0·6 times the tensile strength. In this connection it may be noted that the sensitivity to notch effects is much less in cast iron than in steel.

---

* Particulars of various alloy cast irons are given in Chapter III, Vol. I, *Engineering Materials*.

† Data on Cast Iron, B.S.S. 991—1941.

The *hardness* of cast iron depends primarily upon the structure of the metal, and is influenced by the composition, mode of casting, and subsequent heat-treatment. Special surface-hardening methods, such as nitriding, give the highest hardness values, namely, 900 to 1000 on the Firth diamond hardness scale. For normal machining purposes the Brinell hardness should not exceed about 230 for ordinary cast irons, but with modern high-duty cast irons, e.g. the higher grades of B.S.S. 786,* good machining quality is obtained with hardness up to 350 Brinell.

Effect of Temperature on Tensile Strength

Tests that have been made on cast iron subject to tensile stresses show that there is very little change in the tensile strength as the temperature is changed from 0° C. to 400° C. Between 400° C. and 500° C. there is a definite small reduction in strength; from 500° C. to 600° C. a fairly big reduction occurs; and at 700° C. the tensile strength is usually only about one-third of its value at 0° C. The following results show the percentage variations of the tensile strength of an average grade of grey cast iron at different temperatures—

Temperature, ° C.	15	200	300	400	500	600	700
Tensile strength—% of strength at 15° C.	100	92·5	92·3	97	86	58·5	35·4

An important property of cast irons from both the mechanical and heat-resisting points of view is that of *ductility*. This property is usually taken as the deflection under standard transverse loading conditions, i.e. as beams supported at the ends and loaded at the centres.

Under high temperature test conditions, e.g. from 650° C. to 850° C., it has been shown that the deflection increases as the load at the centre, the actual value being dependent upon the composition, structure, and other physical conditions.

The results of some deflection tests carried out at 850° C.† by L. W. Bolton on several grades of cast iron and on steel (0·84 C) are reproduced in Fig. 52. The iron (2) was a good quality grey cast iron. The iron (21) was a highly heat-resistant austenitic cast iron and that shown by the curve (3) was a good heat-resisting iron of the Silal type. The high silicon iron had a silicon content of 13·77 per cent. The test apparatus used is shown in Fig. 53. The specimen, shown at *D*,

---

* *Vide* page 81.

† "Deflection of Cast Iron at High Temperatures," H. L. Bolton, *The Engineer*, 12th September, 1941.

was a bar 7 in. long and 0·6 in. diameter, reduced to 0·5 in. diameter for a distance of 1 in. near the end for the purpose of localizing the stress. One end of the test piece was held rigidly in a holder *B* clamped to the base of the apparatus by means of stout cast iron brackets. The test piece was loaded at the free end with weights *E*, and a system of levers *F* amplified the movement of the pointer at the end in the ratio of 10 to 1, this movement (i.e. deflection at the free end) being recorded on a moving drum *G*. In order to eliminate the effects of vibration, the whole apparatus was suspended on springs *H*. The test piece was raised to, and maintained at, the required temperature by means of a resistance furnace *A*, well lagged with kieselguhr. On account of the massive size of the holder *B*, the rest of the apparatus was also thoroughly insulated with kieselguhr and slag wool *C*.

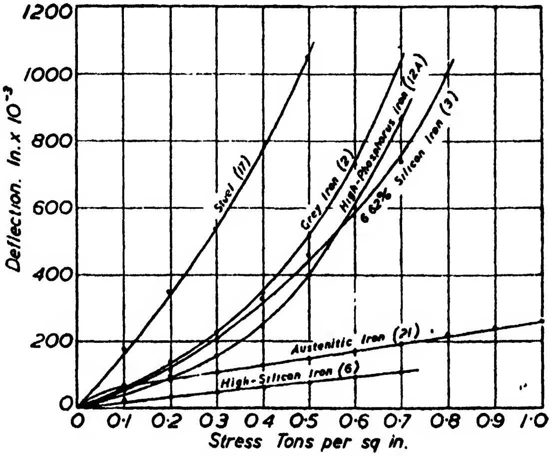

Fig. 52. High Temperature Tests on Various Cast Irons

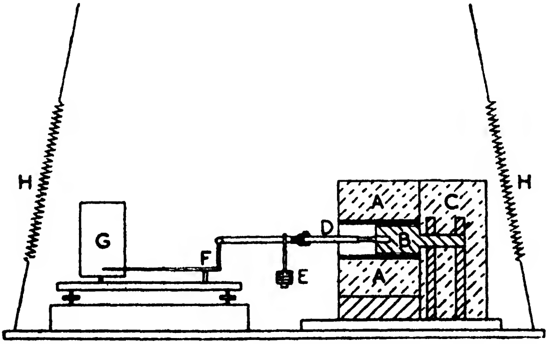

Fig. 53. Temperature Test Apparatus for Cast Iron Specimens

The weights used at the free end were such that the transverse stress at the narrowed part of the bar near the fixed end could be increased in steps of 0·1 ton per sq. in. from 0 to 2 tons per sq. in.

The effect of applying a load at the free end of the bar was to cause a fairly rapid rate of deflection for the first three or four hours, but after this the rate of deflection gradually decreased, and then remained constant. At the end of a twenty-four-hour period the load was stepped up by an increment of 0·1 ton per sq. in., which was maintained for another twenty-four hours, and this process was repeated until the bar had bent through an angle of approximately 10°. It is worthy of note that even the most brittle of cast irons, such as the high silicon and high phosphorus irons, were found to deform to this extent at 850° C. without breaking.

The results depicted in Fig. 52 show that the medium carbon steel gave a very much greater deflection at a given stress value than any of the cast irons, and, further, had a much smaller range of stress values. The grey iron over the stress range of 0 to 0·7 ton per sq. in. gave greater deflections than the other alloy irons, whilst the austenitic and high silicon irons showed comparatively small deflections over the stress range. Thus, for applications in which rigidity or stiffness at high temperatures is an important quality, the two latter irons would be the more suitable. The high silicon iron, however, is very brittle when cold. The austenitic irons, of which "Nicrosilal" and "Ni-Resist" are examples, whilst offering good resistances to deflection at elevated temperatures, also show excellent resistance to growth and scaling, and are not marked by ordinary temperature brittleness.

It was found that *graphite size* had an important influence on resistance to deflection at high temperatures those irons with the finer graphitic structure offering the greater resistance.

Shearing Strength of Cast Iron

The shearing strength of cast iron, according to the most reliable authorities, lies between 6 and 18 tons per sq. in., depending on the grade of the iron. The white irons give the higher and the grey irons the lower values.

It was at one time thought that cast iron seldom exceeded 5 or 6 tons per sq. in. in single shear, but the results of Izod* and Goodman show fairly conclusively that a much higher value is realized.

Izod found that for a cast iron of 9·7 tensile strength, the shearing strength figure was 14·8; for one of 13·4 tensile strength the shearing strength was 17·4.

Goodman ascertained the shearing strength of a 10·9 tensile strength cast iron to be 12·9; and of an 11·5 tensile strength one,

---

* Izod, *Proc. Inst. Mech. Eng.*, January, 1906.

13·0. It will be observed that the shearing strength is actually greater than the tensile strength.

The tensile strengths of modern alloy cast irons, of which Ni-Hard and Ni-Tensyl are typical examples, range from a little over 20 tons per sq. in. (as cast) to about 30 tons per sq. in. (heat-treated), with correspondingly high values of the shearing strengths.

Testing of Cast Iron

Most of the cast iron used for engines, machines, and structures has to withstand tensile, compressive, or bending stresses in practice. If the exact nature of the stresses experienced by the finished product is known, it is advisable to subject specimens of the cast iron to the same kind of stresses, so as to afford actual design data.

In general, it is not always convenient, or, indeed, an easy matter, to test cast iron in tension, torsion, or even in compression, so that by common consent the transverse bending test has become recognized as the standard one for most purposes although tensile tests are frequently specified. In earlier tests samples of cast iron, from the same melt as the bulk of the iron to be used for the specified purpose, were cast in the form of rectangular bars of given dimensions. Each bar in the unmachined state, unless otherwise specified, was placed on a pair of knife-edges, situated as shown in Fig. 54, and tested by loading at its centre. The deflection and the breaking load were measured. The breaking load was taken as a measure of the strength, whilst the deflection gave an approximate measure of the toughness.

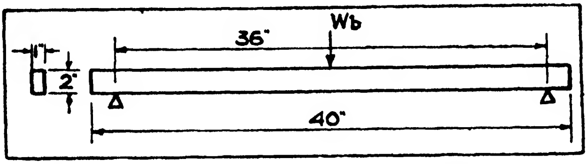

FIG. 54. STANDARD TEST PIECE FOR CAST IRON

The rectangular section test bar previously used for test specification purposes has now been replaced by the round or cylindrical bar; this shape is used in British Standard specifications of cast irons and also in the American A.S.T.M. specifications for grey iron castings. In each case, however, alternative tensile tests are specified.

Effect of Dimensions on Strength of Cast Iron

It is common knowledge in foundry practice that the strength of a casting invariably varies according to the thickness of the sections, being stronger for the thinner and weaker for the thicker sections. In this connection if a series of cylindrical bars of varying diameters are cast at the same time as the casting and from the same molten metal and ladle, and these bars are lightly machined to remove any hard skin or surface defects to the test piece diameters, it will be found that the strength as measured by any static method of testing, whether in tension, transverse bending, compression, shear or torsion, varies continuously with the diameter of the test bar, the strength decreasing as the diameter is increased.

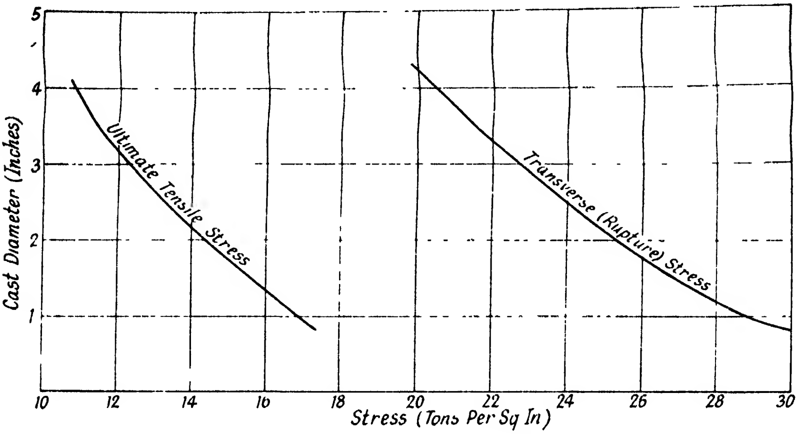

FIG. 55. STRENGTHS OF CAST IRON BARS OF DIFFERENT DIAMETERS

Fig. 55* illustrates the results of tensile and transverse tests made upon cast iron test pieces of various diameters from the same metal and melt. It will be observed that there are considerable differences in the strengths of bars of various diameters. Thus the tensile strength

TABLE 13

MINIMUM ULTIMATE TENSILE STRENGTH FOR GREY IRON CASTINGS

Diameter of Test Bar	Minimum Ultimate Tensile Stress	
	Grade A	Grade C
In.	Tons per sq. in.	Tons per sq. in.
0·6	12·5	10
0·875	12	10
1·2	11	9
1·6	10·5	9
2·1	10	9

---

* "The Testing of Castings," J. G. Pearce, *The Metallurgist*, 25th December, 1931.

of the 1 in. bar is about 57 per cent greater than that of the 4 in. bar, whilst the transverse strength is 40 per cent greater.

In the case of grey iron castings specified by the British Standards Institution* the minimum tensile strengths for the two grades *A* and *C* specified and for the five alternative test bar diameters are shown in Table 13.

The minimum transverse rupture stress values for test bars of various diameters are specified as follows –

TABLE 14

MINIMUM TRANSVERSE RUPTURE STRESSES FOR GREY CAST IRON

Diameter of Test Bar	Minimum Transverse Rupture Stress	
	Grade *A*	Grade *C*
In.	Tons per sq. in.	Tons per sq. in.
0·6	25·1	19·9
0·875	24·1	19·6
1·2	23·1	18·9
1·6	21·4	18·3
2·1	19·6	17·7

For high-duty iron castings† which are specified in three grades the minimum tensile strength for the strongest grade (3) for a test bar of 0·875 in. diameter is 22 tons per sq. in., falling to 18 tons per sq. in. for a test bar of 2·1 in. diameter. The corresponding minimum transverse rupture stress values are 33·0 and 29·1 tons per sq. in., respectively.

During the war period a special high-duty grade of cast iron known as Grade 4 was used as a substitute for cast steel in many applications, and for the 0·875 in. and 2·1 in. diameter test bars the minimum transverse rupture strengths were specified to be 39 and 30 tons per sq. in., respectively; the corresponding tensile strength values were 25 and 21 tons per sq. in., respectively.

The British Standard Test Method for Grey Cast Iron

The test bars for tensile or transverse breaking tests can be either cast separately at the time of making the castings or cast on one portion of the actual casting from the same ladle of metal, using green sand or dry sand moulds.

The shape of the standard tensile test piece is shown in Fig. 56.

---

* B.S.S. No. 321—1938.

† B.S.S. No. 786—1938.

The cast diameters B are 0·6, 0·875, 1·2, 1·6 and 2·1 in., and the corresponding machined gauge diameters D are 0·399, 0·564, 0·798, 1·128, and 1·596 in., respectively. These give corresponding cross-sectional areas of ⅛, ¼, ½, 1 and 2 sq. in., respectively. The minimum parallel length P is 2·0 in. in all cases. The minimum radius varies from 1¼ in. for the smallest to 3½ in. for the largest test piece. Other dimensions indicated by the letters in Fig. 56 are given in tabular form in the original specification.*

For the transverse tests five alternative sizes of test bar are specified, the respective diameters being taken to represent *corresponding cross-sectional thicknesses* of the actual castings. The following are particulars of the B.S. test bars—

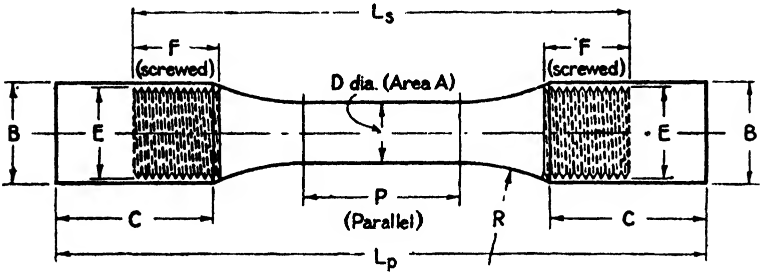

Fig. 56. Dimensions of Cast Iron Test Pieces

TABLE 15

Dimensions of British Standard Test Bars

Diameter of Test Bar	Overall Length	Main Cross-sectional Thickness of Casting Represented
In.	In.	In.
0·6	10	Not exceeding ⅜
0·875	15	Over ⅜ and not exceeding ¾
1·2	21	Over ¾ and not exceeding 1⅛
1·6	21	Over 1⅛ and not exceeding 1⅝
2·1	27	Over 1⅝

The method of transverse testing consists in placing the test bar on supports set at a specified distance apart and loading the bar at the centre until it fractures. The deflection at the centre before rupture is measured. The distances between the supports for the five diameters of test bars given in Table 15 are 9, 12, 18, 18 and 24 in., respectively.

For the Grade C grey cast iron test bar of 0·6 in. diameter the minimum central breaking load is 420 lb. and minimum deflection

---

* *Vide*, page 87.

0·06 in. For the 2·1 in. test bar the corresponding values are 6020 lb. and 0·14 in., respectively.

As an example of the high strength cast iron values* it may be mentioned that for test bars of 0·875 in. and 2·1 in. diameter, the minimum breaking loads specified are 1910 and 11,200 lb., respectively, and the minimum deflections are 0·14 in. and 0·24 in., respectively.

In regard to the transverse tests the supports and the point of application of the load are rounded to a radius of not less than ⅛ in.

Modulus of Rupture

The basis for the transverse test on cast iron is the Modulus of Rupture derived—on erroneous assumptions, it may be added—from the ordinary beam formula—

$$p = \frac{M \cdot y}{I}$$

where p = maximum fibre stress, M = the bending moment, y = the distance of the place of maximum fibre stress from the neutral axis, and I = the moment of inertia of the section about the neutral axis.

For a rectangular beam of width b, depth d, and span l, loaded with W at its centre, the formula becomes—

$$p = \frac{Wl}{4} \cdot \frac{y}{I} = \frac{3Wl}{2bd^2}$$

The formulae given apply only within the elastic limit. Beyond this point the value of the stress p, estimated from the above formulae, does not give the actual fibre stress. It affords a useful figure of comparison, however, for bars of similar proportions.

That it does not yield uniform results will be evident when it is stated that for the same grade of cast iron cast in different spans, the following results were obtained by Mathews†—

TABLE 16

EFFECT OF SPAN ON MODULUS OF RUPTURE (GREY CAST IRON)‡

Diameter	Span	Breaking Load at Centre	Modulus of Rupture	Tensile Strength
In.	In.	Lb.	Tons per sq. in.	Tons per sq. in.
1·75	12	3000	2·105	11·43
1·75	18	1935	2·035	11·43
1·75	24	1425	1·996	11·43

---

* Grade 4, B.S.S. 7943—May, 1941.

† *Proc. Amer. Soc.*, "Testing Materials," Vol. X, p. 299.

‡ 1·5 per cent silicon.

It will be seen that as the span increases the modulus of rupture decreases.

For *the round section of test bar* used in modern cast iron tests the breaking or rupture stress p is given by the following relation—

$$p \doteq \frac{WL}{4} \cdot \frac{1}{0{\cdot}0982d^3} \text{ tons per sq. in.}$$

where W is in tons and L and d in inches.

Since for a standard round bar L and d are constant the transverse rupture stress may be expressed as

$$p = k \,.\, W$$

where k is a constant.

In the British Standard Specifications for cast irons the factor k for converting actual breaking loads into transverse rupture stresses is given in tabular form for the standard sizes of test bars. This table also gives factors for converting actual breaking loads into equivalent breaking loads on bars of standard diameter.

Notes on the Transverse Test

It is not possible in the present limited space to discuss in detail the methods or results of the numerous tests upon cast iron that have been made by various authorities, but only to make a few observations on certain general conclusions that can be drawn from these results.

It has been shown, for example, that the method of casting of the test bars has an important influence upon the test results. Bars cast vertically are usually stronger and more free from defects than those cast on edge, or flat.

Machined bars are nearly always weaker, for the central breaking load value, than unmachined ones.

It has been shown that if a series of bars are cast with the same proportions, i.e. ratio of breadth to depth and span, the modulus of rupture is greatest for the smallest section; this is in agreement with the results obtained from round test pieces.

If test bars, after casting, are rotated in a "tumbler," the strength is increased owing to the tougher skin produced.

Bars of square section usually give a rather higher modulus of rupture than round bars.

Cast Iron Piston Rings

The piston rings used for automobile and aircraft engines are of cast iron, and for most applications are now made from the compositions laid down in the British Standard Specifications 5004 (automobile) and 4K6 (aircraft). For special high-duty purposes an alloy cast iron—usually containing copper, molybdenum and nickel—is employed; a typical specification is that given in D.T.D. Specification No. 277.

The structure of the piston ring iron is much influenced by the rate of cooling, mass effect and other conditions, and it is not usual to specify a tensile, transverse or impact test, but one carried out on the actual machined and slit piston ring.

For specified "tensile" tests on the finished ring, an ordinary tensile testing machine of relatively low loading capacity can be used. The shackles attached to the weighing and straining members, respectively, are provided with projecting cylinders or pins which engage with the inside surfaces of the rings on opposite diameters, the slit portion being on a diameter at right angles as indicated in Fig. 57. The ring is thus subjected to transverse stress and is pulled until it fractures. The modulus of rupture f_m is then estimated from the following formula—

$$f_m = \frac{W \,.\, d}{750\, b \,.\, t^2} \text{ tons per sq. in.}$$

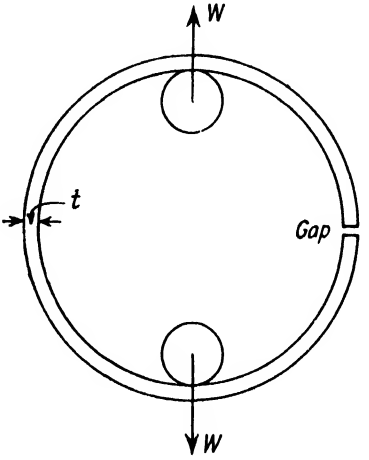

Fig. 57 Method of Testing Piston Ring

W denotes the load

where W = breaking load in pounds, d = outside diameter of the unsplit ring in inches, b = width of ring at point of breakage in inches, and t = radial thickness at point of breakage in inches.

It is now usual to refer to this test as the "transverse" one, since the tensile fibre stress values, hitherto computed from the modulus of rupture by multiplying the latter value by a factor (1·6 to 2·2), does not always give reliable results.

Test rings are cut approximately from the middle of the length of the selected pot, and in the case of centrifugally cast pots, they are cut at any point not less than $\frac{1}{4}$ in. from the end of the selected pot.

It is stipulated that a test ring shall be machined from the pot, so that the radial thickness lies between the limits of

$$\frac{\text{Diameter}}{30} \text{ and } \frac{\text{Diameter}}{30} + 0{\cdot}008 \text{ in.}$$

and a piece shall be cut out of the ring so as to leave a free gap of not less than 2·75*t* and not more than 3*t* (Fig. 58). The width *b* and the radial thickness *t* shall then be determined, and a diametral load *Q* lb., sufficient to close the gap to less than 0·25t shall then be applied. The change in gap k and the external diameter of the closed ring d shall be measured, and the value of Young's modulus E_N when calculated from the following formula shall be not less than a specified value.

$$E_N = \frac{5{\cdot}37\left(\frac{d}{t}-1\right)^3 Q}{b\,.\,k}$$

The minimum value of E_N for wide-type concentric rings for automobile engines is specified as 12×10^6 lb. per sq. in. Thus, with a maximum free gap equal to four times the minimum thickness of the ring and a ring thickness of $\frac{1}{30}$ of the outside diameter, a minimum pressure of 9·3 lb. per sq. in. on the cylinder walls when the gap is closed will give the minimum value of E_N previously mentioned.

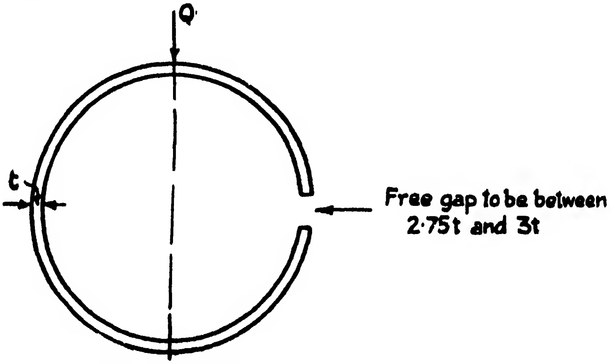

FIG. 58. CAST IRON PISTON RING TESTS

The cast iron used is not perfectly elastic so that the value of E_N in practice shows considerable variation, and it is therefore not possible to make exact design calculations, but the following formulae give approximate results—

$$p = \frac{E_N}{1{\cdot}77\,\frac{d}{t}\left(\frac{d}{t}-1\right)^3} \text{ lb.per sq. in.}$$

where p = cylinder wall pressure.

Also

$$f = \frac{E_N}{1320\left(\frac{d}{t}-1\right)^2} \text{ tons per sq. in.}$$

where f = theoretical maximum stress.

The value of f for $E_N = 12 \times 10^6$ lb. per sq. in. in rings having the maximum permissible thickness ranges from 13·8 tons per sq. in. for the 2·0 in. diameter ring to 11·7 tons per sq. in. for the 6·0 in. diameter one.

The theoretical maximum cylinder wall pressures range from 14·9 lb. per sq. in. for the 2·0 in. diameter ring to 10·9 lb. per sq. in. for the 6·0 in. diameter one.

Practical Tests of Cast Iron Rings

The piston rings used in internal combustion engines are invariably of a high quality cast iron of the grades described in Vol. I of this work. A method of testing these rings, based upon the principle underlying the B.S.I. specified tests, is that employed in the Brico Piston-ring Tester illustrated in Fig. 59.

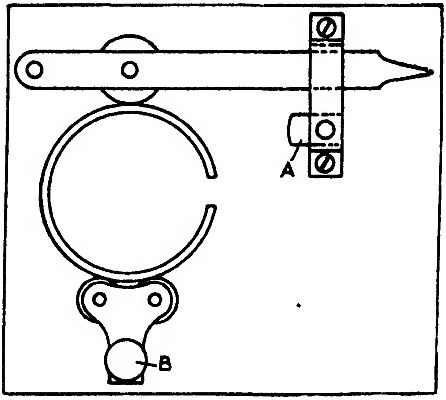

FIG. 59. THE BRICO PISTON-RING TESTING APPARATUS

The scheme adopted is to measure the load which, applied at opposite ends of a diameter normal to that containing the gap, is necessary to close the ring. The method of using the machine is as follows: To obtain the pressure per sq. in. of any ring, the stop *A* is raised and the beam held down by applying a substantial load on a spring balance. The support *B* is then pushed up until the ring just closes. This ensures that the beam is horizontal when the ring is close to the cylinder diameter. The load is then released, the stop lowered, and the load applied again until the ring just closes. The reading of the balance is the actual load applied by the ball bearing, and may be specified as "diametral" load to close or converted into terms of pressure per sq. in. by using the formula given with the machine. It should be noticed that the machine should always be used in a horizontal position, otherwise the weight of the lever and gauge will cause incorrect readings.

In testing a batch of rings, it is necessary only to adjust the ring support to the closed diameter of the first ring; the others can easily be sprung into position. If it is desired to test a batch of rings to any definite pressure or load, the beam is held in a horizontal position and the slide actuating the balance set to give the required figure on the balance; the rings are then put through the machine and can be distinguished as being low or high in pressure, according to whether the ring closes too far, giving overlap, or does not close to cylinder diameter.

CHAPTER IV

EFFECT OF TEMPERATURE UPON THE STRENGTH OF METALS

PARTS of machines such as boilers, internal combustion engine cylinders, valves, supercharger impellers, etc., are exposed to considerably higher temperature than atmospheric, and this fact should be taken into account in design work. At ordinary atmospheric temperatures there is no appreciable change in the tensile strength of mild steel or wrought iron. The tensile strength increases continuously from 0° C. to — 200° C., being about 80 per cent greater at the latter temperature. It also increases from 0° C. to about 200° C. by about 30 per cent, and then falls off continuously from 200° C. up to the melting point. The loss in tensile strength between 200° C. and 500° C. is generally from 40 to 50 per cent of the normal atmospheric value.

The elastic limit falls continuously from atmospheric temperature right up to the highest temperatures at which there is any tensile strength; thus from 0° C. to 500° C. the elastic limit falls by from 45 to 55 per cent.

The elongation diminishes from 0° C. to about 180° C., and then increases continuously for higher temperatures.

Iron or steel containing an appreciable amount of *phosphorus* becomes brittle at low temperatures; this effect is known as "cold-shortness." The opposite effect—namely, a loss of strength at high temperatures—is known as "red-shortness," and may be due to the presence of too much *sulphur.*

At a "blue heat" it is inadvisable to work steel or iron, as the material becomes brittle when it cools down. Prolonged exposure of wrought iron to temperatures as low as 60° C. will cause a slight falling off in its strength, and a variation in its magnetic qualities.

Very low temperatures, such as those of liquid gases, have the effect of making the metal brittle, and of diminishing the elongation. As previously mentioned, the tensile strength increases with progressive decrease of temperature in the case of mild steel and iron. Fig. 60 illustrates the manner in which the tensile strength of iron varies with the temperature.

Creep Stress Tests

A good deal of useful research has been carried out in recent times on the effect of temperature upon both the steady and also the repeated stresses of metals.

During the course of an investigation on valve failures, undertaken for the Air Ministry at the National Physical Laboratory,* it was found that the rate of application of the load in making tensile tests upon steel was of great importance. It was realized that such tests must include the determination not only of the strength of the materials as given by ordinary tests, but also the load that could safely be applied for an indefinite period at various temperatures.

Such tests, giving the rate of extension during prolonged periods of loading, are known as "*Creep*" *tests*; these were instituted in 1920–21 for the purposes of researches on certain alloys of iron at 600° C., carried out for the British Electrical and Allied Industries Research Association.

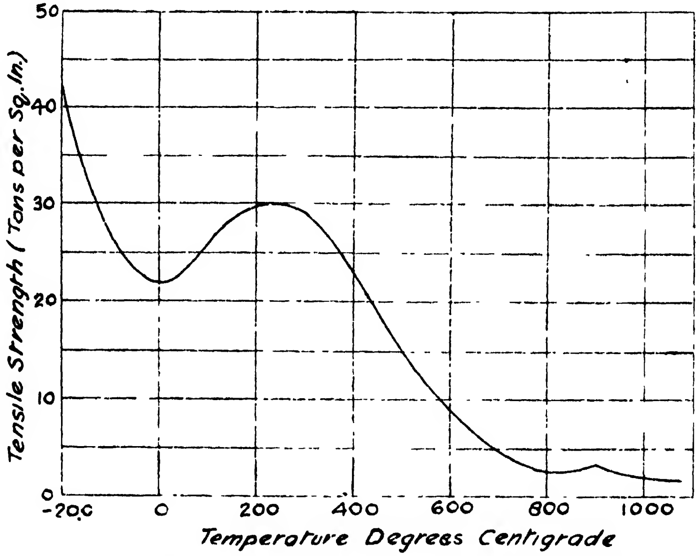

FIG. 60. EFFECT OF TEMPERATURE UPON TENSILE STRENGTH OF WROUGHT IRON

When a tensile stress is applied to a metal specimen at temperatures above the normal, its tensile strength depends upon the period of time during which the load is applied. If the time is relatively short, the tensile strength approaches a maximum value. If the time is prolonged, the material creeps or flows, and the tensile strength has a different value from that of the short time test.

There appears to be a limiting stress corresponding to any temperature below which the material will not fracture when the stress is applied for an indefinite time.

Some of the results of these tests are given in Table 17.

---

* L. Aitcheson, *Proc. Inst. Autom. Engrs.*, pp. 14, 31 (1919–20).

TABLE 17

Strength of Steels at High Temperatures (600° C.)

Material	Normal Loading Conditions. Ultimate Stress	Steady Stress		Temperature
		Stress Applied	Time to Fracture	
	Tons/sq. in.	Tons/sq. in.	Minutes	
Mild steel	14·1	10·8	32	600° C.
Stainless steel (1)	18·6	14·1	68	
Stainless steel (2)	20·7	12·3	139	
Nickel steel	18·2	10·25 6·15	33 51 hours	

No sign of decrease in the rate of extension, after 14 days, was observed when a steady stress of 4·0 tons per sq. in. was applied to stainless steel No. 1 in the preceding table.

Tests made by J. H. S. Dickenson* in 1922 showed how creep reduced the real strength of the material at high temperatures to a value much below that obtained at the usual rate of loading in a tensile testing machine.

Other investigations were made in 1924 by F. C. Lea,† in 1925 by Mellanby and Kerr,‡ and also by Tapsell and Bradley.§ Most of these and later investigations are analysed and reviewed by Prof. W. Kerr|| in a paper on the "Failure of Metals by Creep," published in 1926.

The results of investigations carried out at the N.P.L. on three materials, namely, Armco iron, mild steel (0·15 per cent C) and mild steel (0·25 per cent C) are published in a special Report No. 1, Engineering Research (Dept. of Scientific and Industrial Research), entitled "Properties of Materials at High Temperatures, I." In a second Report, the mechanical properties of 0·51 per cent carbon steel and 0·53 per cent carbon cast steel are dealt with.

The Armco iron tested had the following composition—

Carbon	0·02 per cent
Silicon	(trace)
Sulphur	0·034 ,,
Phosphorus	0·017 ,,
Manganese	0·03 ,,

---

* J. H. S. Dickenson, *Journ. Iron and Steel Inst.*, pp. 106, 113 (1922); *Engineering*, pp. 114, 326, 378 (1922).

† F. C. Lea, *Proc. Inst. Mech. Eng.*, (ii) p. 1053 (1924).

‡ A. L. Mellanby and W. Kerr, *Trans. N.E. Coast Inst. Eng. and Shipbuilders*, pp. 41, 243 (1924–25).

§ H. J. Tapsell and J. Bradley, *Engineering*, pp. 120, 614, 648 (1925); *Journ. Inst. Metals*, pp. 35, 75 (1926).

|| W. Kerr, *Trans. Inst. Eng. Shipbuilders, Scotland*, pp. 69, 319 (1926–27).

It will be seen that this material is a fairly pure variety of iron.

The results of tensile tests at different temperatures up to 700° C. on Armco iron are given in Fig. 61.

Corresponding test results are given in Fig. 62 for the 0·24 per cent carbon steel.

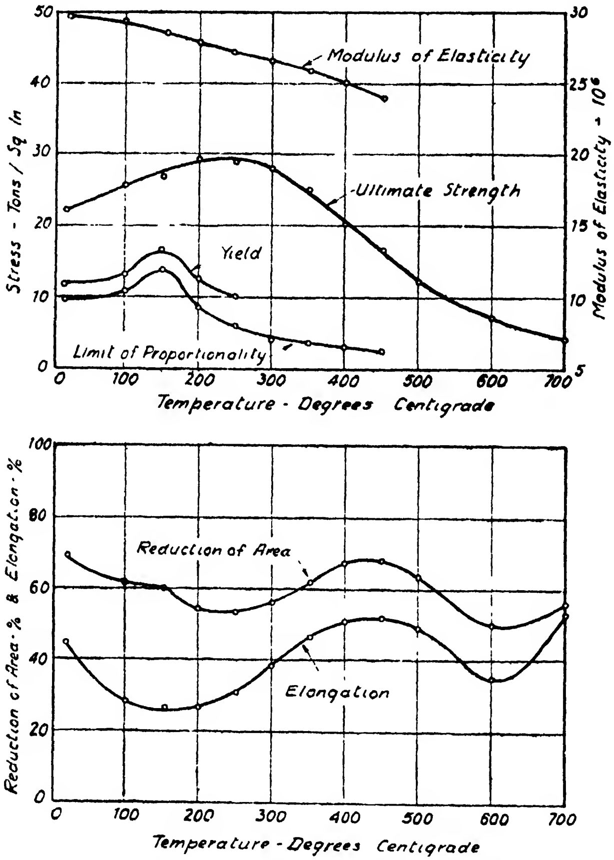

FIG. 61. STRENGTH PROPERTIES OF ARMCO IRON AT DIFFERENT TEMPERATURES

It will be observed that there is a general similarity in the corresponding curves, but that in the case of the 0·24 per cent steel both the elongation and reduction of area increase continuously from about 200° C., whereas in the case of Armco iron there is a decrease after about 400° to 450° C. to a second minimum.

The results of creep stress tests for different rates of creep are shown graphically in Fig. 63. The information given relating to estimated times to fracture for different rates of creep are only meant to indicate the order of magnitude of these times. These results are interesting from the engineer's point of view as indicating the practical values of creep stresses. No account has been taken of possible failure with time due to such causes as excessive oxidization, season cracking, porosity of material, or brittleness; some of these effects, if present, may bring about failure at lower stress values.

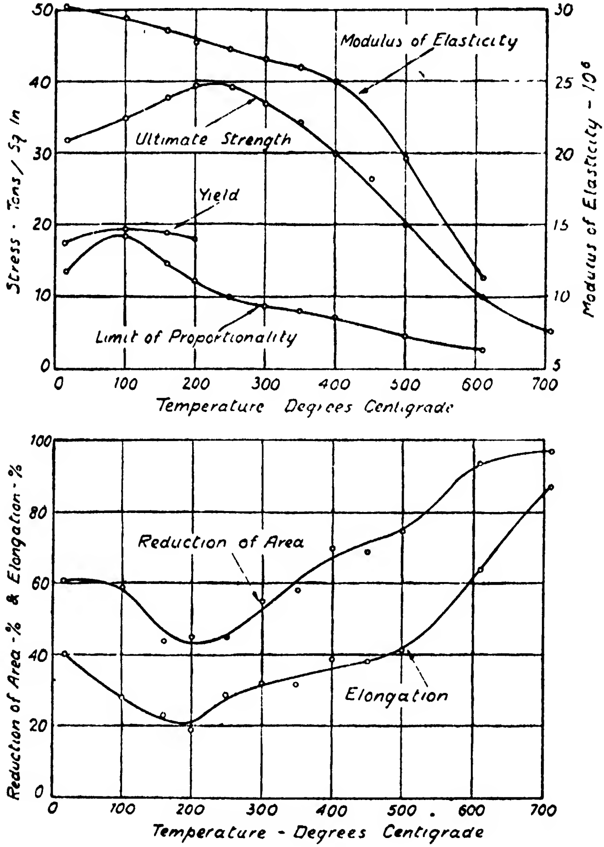

FIG. 62. STRENGTH PROPERTIES OF 0·24 CARBON STEEL AT DIFFERENT TEMPERATURES

In Fig. 64, the limiting creep stress values for the five materials indicated are given for different temperatures, so that a comparison of these values can readily be made.

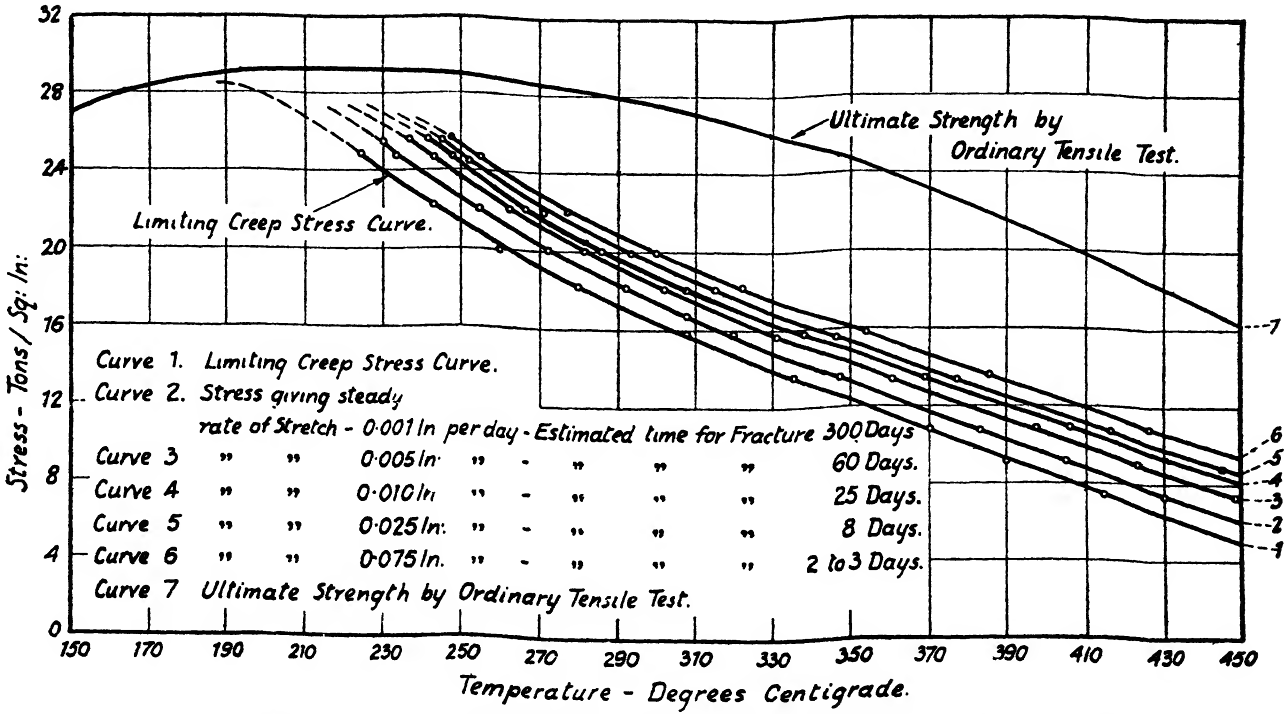

FIG. 63. ILLUSTRATING RESULTS OF CREEP STRESS TESTS AT DIFFERENT RATES OF CREEP FOR ARMCO IRON

It will be observed that at the higher temperature a variation of 20° C. may correspond to a change of 20 per cent in the limiting creep stress, so that calculations for purposes of design should refer to the maximum attainable temperature in service.

Elastic Limit of Nickel-chrome Steel

The effect of temperature upon the elastic limit of nickel-chrome steel has been investigated by Robertson and Newport,* in the case of some tubes 1¼ in. diameter and 18 S.W.G. thick. The approximate chemical composition was—

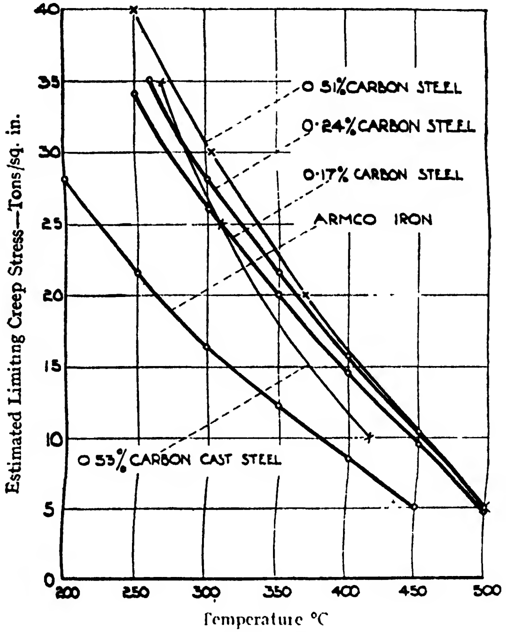

FIG. 64. CREEP STRESS VALUES FOR FOUR DIFFERENT STEELS AND IRON

Carbon	0·25 per cent
Nickel	4·1 ,,
Chromium	1·25 ,,

Fig. 65 shows the elastic limit values for tempering temperatures of 0° to 800° C.

From this curve it will be seen that the elastic limit, which is about 20 tons per sq. in. for the hardened tube is raised to about 60 tons per sq. in. by tempering at 400° C., but that at higher temperatures it

---

* *The Metallurgist*, 22nd February, 1929.

falls off progressively, finally reaching 12·6 tons per sq. in. at 750° C. It was noticed by the experimenters that in the latter condition the strains at comparatively low stresses above the elastic limit are considerable. Further, when tempered at 400° C. the material could be machined, whereas in the hardened condition it could only be ground.

High-carbon and most alloy steels are affected by temperature increase, when these steels have been heat-treated in any way. It is well known that the degree of tempering of cast steel, for example, is governed solely by the temperature; any increase of temperature in the case of hardened cast steel above about 100° C. results in a diminution of tensile strength, but in an increased elongation.

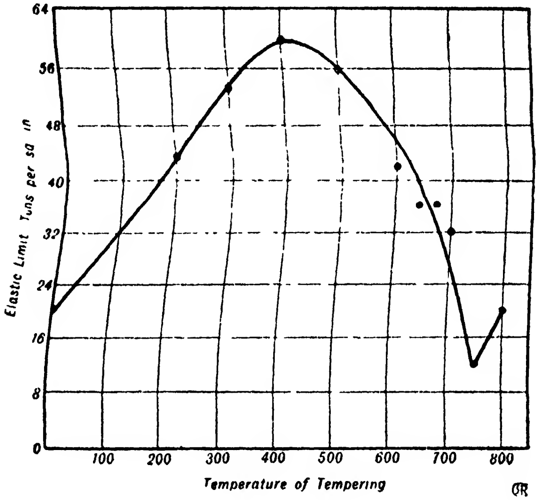

FIG. 65. SHOWING EFFECT OF TEMPERING TEMPERATURES ON THE ELASTIC LIMIT OF NICKEL-CHROME STEEL

Practical Aspects of Creep Test Results

From the previous experimental results it is possible to draw certain definite conclusions and to establish practical test procedure for materials that have to be employed for stressed parts under elevated temperature conditions. Typical examples of these include the rotors and blades of gas and steam turbines, superheated steam fittings, and boilers, high temperature- and pressure-resisting chemical plant, etc. In most applications the maximum temperatures involved lie between 600° and 900° C.

For design purposes it is necessary that the materials employed shall resist creep stresses at their working temperatures so that the rate of elongation or strain over a very long period, representing the working life of the part, shall not exceed a given value.

Special heat-resisting steels of the alloy-steel class are now available for such applications, and a large amount of test data* has been obtained concerning the strengths of such steels at elevated temperatures. In order to obtain absolute data concerning the creep of such metals it is necessary to carry out load tests on specimens exposed to higher temperatures over considerable periods, namely, tens of thousands of hours or for several years in order to simulate actual service conditions. This lengthy process is not commercially practicable so that the general practice is for design to be based *on rates of creep determined within a reasonable test period.*

Tests to ascertain the rates of creep of metals are almost invariably related to tensile loading conditions, since these have been shown to afford a reliable indication of the general behaviour of the metals under other loading conditions The design of components subjected to elevated temperatures must be such that the rate of creep is sufficiently low to ensure that the total elongation or deformation over the estimated life period is within well-defined limits.

In the case of turbine blading it is the practice not to aim at preventing deformation but to allow a limiting maximum extension during the useful life period. In this connection it is known that *the rate of creep diminishes continuously with time,* but it has not yet been definitely established† that, under operating conditions, materials deform for a certain time, after which no further distortion takes place.

Short-time Tests

As it is obviously impossible to carry out rate of creep tests, commercially at least, over the very lengthy periods necessary to afford complete test data on the various metals now employed for elevated temperature applications a considerable amount of attention has been given by various investigators to discover a reliable "short-time" test. In this connection methods have been suggested by Hatfield,‡ Pomp and Enders,|| Bailey and Roberts,§ and others.

The continental practice has been to ascertain the working stresses from tests occupying less than two days and defined by a rate of creep of 1·5 thousandths of 1 per cent, equivalent to 15-millionths per hour, between the 25th and 35th hours.

The method adopted by Hadfields, Ltd., manufacturers of a range

---

* *Vide* Chapter VI, Vol. I, *Engineering Materials,* A. W. Judge (Pitman).

† "The Testing of Engineering Materials," H. J. Gough, *Proc. Inst. Marine Engrs.,* October, 1935.

‡ *Jour. Iron and Steel Institute,* 1930, Vol. 2, p. 215.

|| *Mitt. a. d. Inst. f. Eisenforschung,* Vol. XII, July, 1930.

§ *Proc. Inst. Mech. Engrs.,* Vol. 122, p. 209, 1932.

of heat-resisting steels, is to give the stresses corresponding to a rate of creep of one-millionth per hour at the end of 40 days. The values of the stresses obtained by these two methods are in approximate agreement and are such as to ensure that no excessive total creep can occur in the ordinary life period of a stressed component.

Fig. 66 illustrates some creep stress results for a number of heat-resisting alloy steels of the Era brand,* together with a comparative

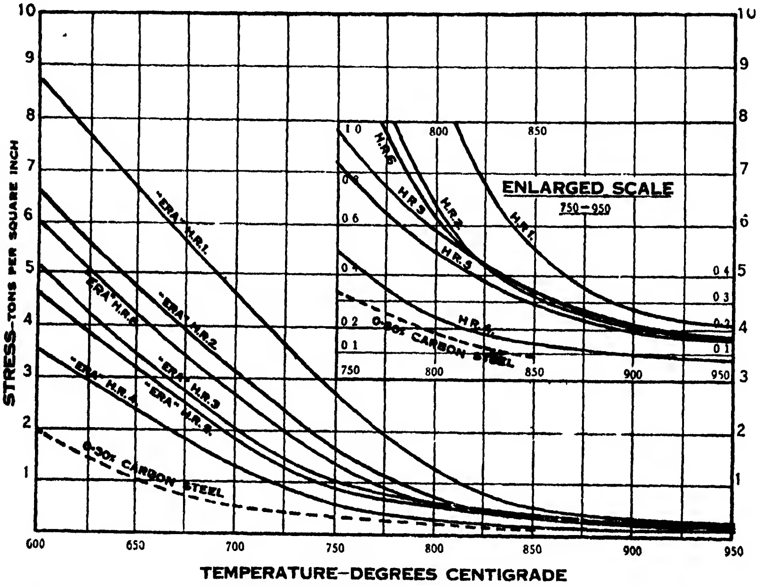

FIG. 66. RESULTS OF CREEP STRESS TESTS OF HEAT-RESISTING STEELS

curve of values of 0·30 per cent carbon steel. The stress-temperature curves are given for a rate of creep of one-millionth per hour measured after 40 days of load. In applying the results of such tests it should be remembered that the values given are only applicable to similar conditions to those under which they were obtained, namely, accurately controlled temperatures and steady loads under laboratory conditions of testing. In practice *if the operating temperature exceeds that for which the parts are designed*, even by as little as 10° C., *the rate of creep will be increased appreciably*. Thus for an excess of 10° C. the rate of creep will be doubled. The rate of creep is also very sensitive to increase in stress; usually there is an increase of about 15 per cent for each 1 per cent increase in stress. It is, therefore, recommended that parts intended for use at elevated temperatures should be designed for the

---

* Messrs. Hadfield, Ltd.

maximum loads and temperatures to which they will be subjected, rather than average values.

Some useful information and data on rational methods of design for high temperature applications are given in a paper by R. W. Bailey* in which it is demonstrated that *the distribution of stress* in loaded steel components at elevated temperatures differs in a marked manner from that observed at ordinary temperatures where the elastic theory is applicable. In general, stress distribution is much more uniform under creep conditions owing, no doubt, to the fact that creep flow tends to even out stress differences.

Structural Changes at Elevated Temperatures

It has been shown that most steels when subjected to prolonged heating at elevated temperatures exhibit changes in microstructure and that these have a marked effect upon their creep characteristics. Thus, in the case of carbon and low alloy steels in the annealed and normalized condition the effect of prolonged heating is to cause *spheroidization of the carbide*, which lowers the creep resistance. The effect diminishes with increase of carbon content in the case of carbon steels. Thus, for 0·4 per cent carbon the reduction of creep resistance due to carbide spheroidization is about 85 per cent that of 0·1 per cent carbon content.

It has been shown by R. W. Bailey† that while steels with the addition of molybdenum have their resistance to creep greatly improved by prolonged heating they may also suffer considerable impairment of creep resistance as a result of heating at high operating temperatures, or by heating to a temperature producing carbide spheroidization.

In connection with the effect of prolonged heating below the Ac.1 point, a temporary stiffening may occur before the weakening effect, previously mentioned, occurs, just as many cold-worked metals when heated first harden before they soften. This age-hardening effect has also been observed in the creep behaviour of carbon steel, molybdenum steel and chromium-molybdenum steel.

Apart from these changes within metals under sustained stress at elevated temperatures, under certain conditions a *general intercrystalline separation may occur in the course of time*, even after relatively short periods. Thus, in the case of a nickel-chromium alloy tested at the National Physical Laboratory, at 800°C. at a stress of 1·8 tons per sq. in. less than 0·0001 strain was observed during a period of 34 days of testing, but complete failure by intercrystalline cracking took place after 54½ days.

---

* "The Utilization of Creep Test Data in Engineering Design," R. W. Bailey, *Proc. Inst. Mech. Engrs.*, November, 1935.

† "Plastic Strain and Creep Stress," R. W. Bailey, *Journ. Jun. Inst. Engrs.*, 15th February, 1935.

It follows that for certain materials short-time test results may be misleading; certain steels and alloys under prolonged stressing at elevated temperatures are prone to this type of failure.

Under elevated temperature conditions transgranular failure occurs when the rate of strain is sufficiently high and there is insufficient time—as in ordinary tensile testing methods—for separation at the grain boundaries to occur. Under creep stress test conditions, with the same temperature conditions, fracture may be intergranular but with low ductility and with the stress at a much lower value than the maximum stress in the previous instance. Some interesting data, in this connection, are given in the paper mentioned in the second footnote on page 105.

Copper and Its Alloys

Copper and its alloys are affected greatly by temperature changes, and the detrimental effect of high temperatures should be taken into account when this metal or its alloys are employed in steam and internal combustion engine work.

Table 18* shows the strengths of several metals of this class at different temperatures.

Unwin gives the following approximate formula for the given metals—

$$f = a - b(t - 60)^2$$

where f is the tensile strength at any temperature t F.

The values of the constants a and b are given in Table 19.

Cast Iron

The effect of temperature increase upon the properties of cast iron† is to increase slightly its tensile and compressive strength from 0° F. to about 900° F., after which these strengths diminish fairly quickly. At 1500° F. the strengths are only about 20 per cent of the normal values.‡

Zinc

When zinc is heated to between 400° C. and 600° C., it becomes very brittle, and often crumples up into small pieces when any attempt is made to work it.

---

* *The Testing of Materials of Construction*, W. C. Unwin (Longmans, Green & Co.).

† The phenomenon known as the "growth" of cast iron occurs at temperatures of 650° C. and above, and consists of a permanent expansion or elongation; it is believed to be due to internal oxidization caused by the penetration of oxidizing gases. Permanent "distortion" occurs at temperatures below 650° C. Automobile cylinders and superheated steam cast-iron fittings experience "growth." A fuller account of this phenomenon is given in Vol. I.

‡ For further information, *vide* "The Heat-treatment of Cast Iron at Low Temperatures," J. E. Hurst, *Engineering*, 4th July, 1919.

TABLE 18

STRENGTH OF COPPER AND ITS ALLOYS AT DIFFERENT TEMPERATURES

Metal	Tensile Strength (Tons per square inch)				
	60° F.	200° F.	300° F.	400° F.	600° F.
Copper	14·8	14·5	14·0	13·2	10·6
Rolled brass	24·1	23·5	22·5	20·9	15·7
Rolled Delta metal	31·3	30·5	28·9	26·6	19·4
Cast gunmetal	12·1	11·7	10·9	9·7	6·0
Cast brass	12·5	12·0	11·1	9·7	5·5
Phosphor bronze	16·1	15·6	14·6	13·1	8·6

TABLE 19

Material	Values of Constants	
	a	*b*
Copper	14 8	0·000014
Rolled yellow brass	24 1	0·000028
Rolled Delta metal	31 3	0·000041
Rolled Muntz metal	14 7	0·000029
Cast gunmetal	12 5	0·000021
Cast brass	12·5	0·000024
Cast phosphor bronze	16 1	0·000026

Torsional Strength at High Temperatures

The results of a series of tests* made upon iron and low carbon steels show that the stress at the limit of proportionality in each case diminishes fairly rapidly with temperature increase. The modulus of rupture also decreases. In the case of Armco iron, the angle of twist per inch at fracture decreases progressively. For 0·17 per cent and 0·24 per cent carbon steel, however, this angle, after reaching a minimum at about 250° C., increases continually up to 700° C.

The results of some of the tests previously referred to are given in Fig. 67 for 0·24 per cent carbon steel, whilst the values (Table 20) refer to the results of torsion tests on Armco iron (see p. 108).

It will be seen from the graphical results that there is a considerable similarity between the torsion and tension test results. The maximum value of the modulus of rupture, however, occurs at a higher temperature than the corresponding maximum of ultimate tensile strength. This is probably due to the fact that the effect of creep is delayed by

---

* *Properties of Materials at High Temperatures (I).* Eng. Research Report (Dept. Scientific and Industrial Research).

TABLE 20

RESULTS OF TORSION TESTS ON ARMCO IRON

Temperature ° C.	Stress at Limit of Proportionality, Tons per sq. in.	Modulus of Rupture, Tons per sq. in.	Angle of Twist per in. at Fracture Degrees	Modulus of Rigidity, Lb./sq. in. × 10^6
16	6·9	28·2	778	11·6
100	7·5	29·5	632	11·5
300	4·0	30·8	406	11·0
500	1·85	11·2	249	—
600	—	6·7	285	—

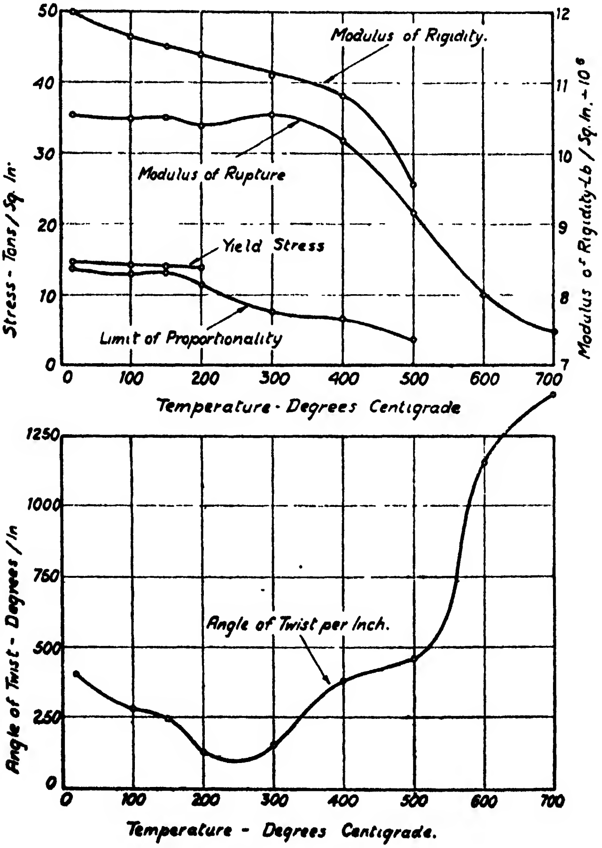

FIG. 67. PROPERTIES OF 0·24 CARBON STEEL AT DIFFERENT TEMPERATURES

the influence of the lower-stressed internal layers of the material as the temperature of test is increased.

Between the temperatures of 150° C. and 200° C. the twisting along the test piece was distinctly non-uniform, and the explanation is probably similar to that put forward with respect to the presence of two or more points of local contraction in the tensile tests at these temperatures. Again, as in the tensile tests, there appears to be the same marked alternations of rigidity and plasticity at 200° C.

Impact Strength at High Temperatures

In view of the importance of shock resistance in high temperature engineering work, it may be of interest to examine the behaviour of iron and steel under different temperature conditions.

An investigation of the strength properties of Armco iron and 0·17 per cent, 0·24 per cent, and 0·51 per cent carbon steel* included a series of notched bar impact tests in which specimens were broken by impact in a Charpy type testing machine. The test pieces were of the B.S.I. standard shape, the energy of the blow was 191·3 ft.-lb., and the velocity 15·8 ft. per sec.

The test pieces had a cross-section at the bottom of the notch of 10 × 8 mm. Tests were made at every 100° C. to 600° C. or 700° C.

The results of these tests are shown plotted in Fig. 68. The graphs show clearly that all three materials behave in the same general manner.

There is a maximum impact resistance between 0° and 100° C. in the case of the iron, and at about 50° to 100° C. for the 0·17 steel, and at 100° C. for the 0·24 per cent steel.

Thereafter the impact resistance falls to a minimum value in each case at about 500° C., and then rises progressively to 700° C.

The tests upon a 0·51 per cent carbon steel indicate that the temperature of maximum impact value is about 200° C. It was pointed out by the investigators that the individual tabulated results showed that the sharp V-notch gives rise to large variations in impact value, especially between 0° C. and 100° C., so that it is important when making impact tests using the sharp notch to know the temperatures of the test pieces accurately.

The Hardness of Steel at High Temperatures

As in certain engineering applications the hardness properties of steels and other metals are important, it is desirable to know how the hardness is affected by increase in temperature.

In the case of most alloy and carbon steels the manufacturers

---

* *Vide* p. 97.

supply heat-treatment charts showing how the hardening and tempering temperature influence the hardness and other mechanical properties of the steel. Examples of such curves are given in a companion volume* to this work. The hardness properties of Armco iron and 0·17 per cent, 0·24 per cent, and 0·51 per cent carbon steels have been investigated† and the results published.

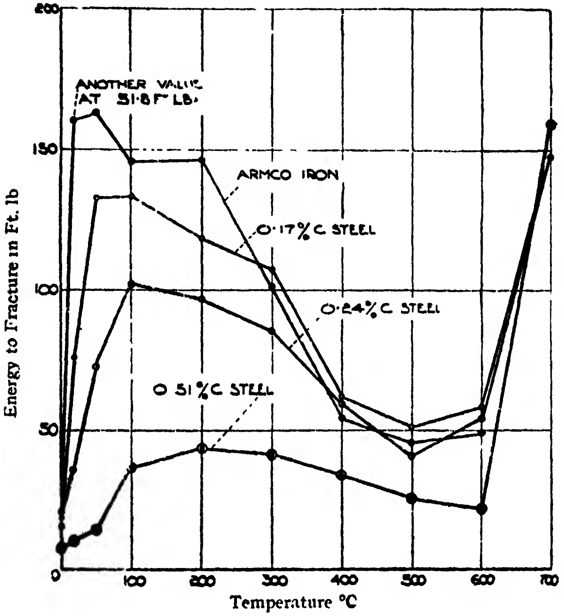

FIG. 68. RESULTS OF TEMPERATURE-IMPACT TESTS ON ARMCO IRON AND THREE STEELS

Determinations of the hardness of the materials were made by the static Brinell method up to a temperature of 400° C., and by an impact hardness method to 700° C. In the latter tests the method consisted of allowing a hammer of weight 1·325 kilogrammes, which held a 10-mm. diameter ball at its lower end, to fall from a height of 50 cm. on to the test piece so that a spherical indentation was made. The height of rebound of the hammer was observed so that the energy absorbed by the test piece, causing the indentation, could be obtained.

All the test pieces were in the form of cylinders ¾ in. long. The indentation was made on one end, which had previously been polished.

---

* *Engineering Materials*, Vol. I, A. W. Judge (Pitman, London).

† *Vide* p. 97.

The impact hardness numbers were calculated from the following formula—

$$I = \frac{E}{V}$$

where I = impact hardness number; E = energy absorbed in making the indentation; and V = volume of the indentation in cubic centimetres, calculated from the diameter.

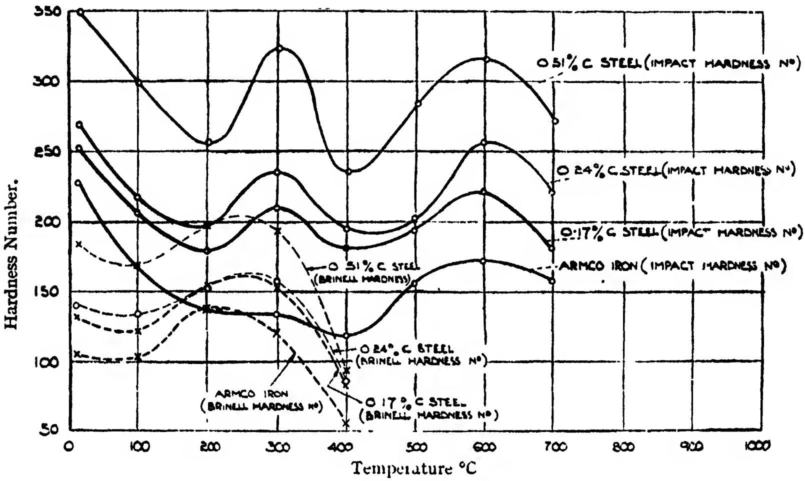

FIG. 69. HARDNESS-TEMPERATURE TEST RESULTS

The Brinell hardness numbers were estimated from the relation—

$$H = \frac{L}{A}$$

where H = Brinell hardness number; L = load in kilogrammes; and A = spherical area of indentation in square millimetres, estimated from the diameter.

The results of the hardness tests are illustrated in Fig. 69. The full line curves refer to the impact hardness values, whilst the broken line curves apply to the Brinell values.

It will be seen that the impact hardness and Brinell hardness curves are not of the same form. The Brinell hardness curves show a maximum at between 200° C. and 300° C., and then fall rapidly to 400° C.

It will also be noticed that the impact hardness numbers are considerably higher for all materials than the Brinell hardness values, at similar air temperatures.

The static tests at temperatures up to 400° C. were made partly to obtain an indication of the amount of work-hardening occurring under the application of stress at temperatures above atmospheric. In the case of these tests up to 300° C. there appeared to be little, if any, continued penetration of the ball after 30 secs. If, as appears likely, the material can be definitely hardened at these temperatures in spite of the annealing effect of the high temperatures with time, then some explanation is forthcoming of the cessation of creep in the creep tests.

Fatigue Strengths at High Temperatures

The question of the strength of metal parts exposed to repeated stresses at high temperatures is an important one in steam and internal combustion engineering work.

It is only during the past twenty years that any serious attempts have been made to investigate the fatigue strengths of metals under different systems of loading and over appreciable temperature ranges.

It is always assumed, unless stated to the contrary, that tests upon materials are carried out under ordinary temperature conditions. Further, as previously shown, most materials experience a marked alteration in their mechanical strength properties up to and at the higher temperatures. Similarly, in the case of fatigue stresses, the results obtained are different from those at normal temperatures. but the conditions are complicated by the existence of the phenomenon of "creep" at the higher temperatures. At very low temperatures, such as those used in connection with refrigerating machines the problem of fatigue resistance is bound up with that of "shock" or impact resistance, this being the important factor in such cases.

In the case of reversed direct stresses on carbon and alloy steels the endurance limit usually decreases a little as the temperature is increased from 0° C. to 150° C., and then increases to a maximum value in each case.

This maximum is usually from 15 per cent to 25 per cent higher than the minimum, and occurs at temperatures of 300° C. to 400° C. for most medium carbon and alloy steels. Beyond the temperature corresponding to the maximum endurance limit there is a fairly rapid decrease in the endurance limit to the critical temperature, i.e. 500° C. to 700° C.

Fatigue tests up to high temperatures have been made in the cases of direct and also reversed bending stresses. In the former connection the results of some tests* made under conditions of direct reverse stresses (mean stress zero) in a Haigh alternating stress testing machine, working at a speed of about 2,400 cycles per min., using Armco iron, 0·17, 0·24, and 0·51 per cent carbon steels are illustrated in Fig. 70.

---

* *Vide* p. 97.

The results show that the fatigue ranges from zero mean stress, based on 10^7 reversals, are considerably higher between the temperatures 300° C. and 400° C. than at air temperature, although the limiting creep stresses are falling rapidly at these temperatures. Apparently the time taken to complete 10^7 reversals is too short to allow the effect of creep to manifest itself; the rate of reversal is too rapid.

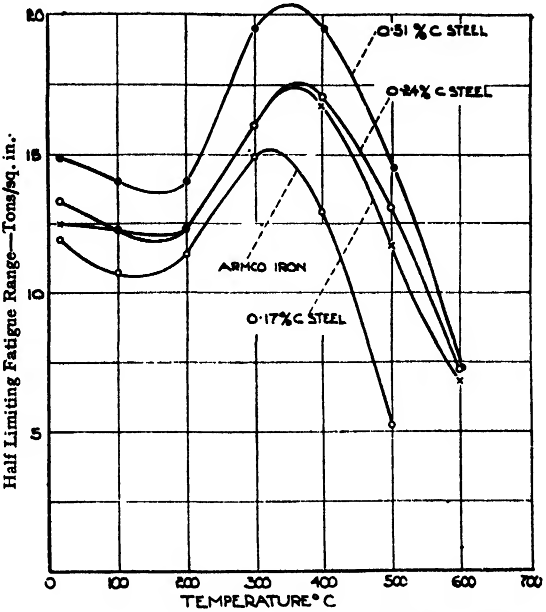

Fig. 70. Fatigue Strengths of Steels at Different Temperatures

The results of a good number of the temperature-fatigue tests made upon ferrous materials, and one or two alloys of nickel, chromium, copper, aluminium and silicon are given in Table 21.*

These tabular data represent most of the available published data for reversed direct stresses; all the results given were obtained from the Haigh machine at 2000 r.p.m.

The data have, for convenience, been tabulated at intervals of 100° C., the values being taken from the curves of experimenters.

The test data given in the preceding table are shown plotted in Fig. 71. In this connection, it will be seen the maximum value of the

---

* Reproduced from H. J. Gough's Cantor Lecture, "Fatigue Phenomena," September, 1928.

TABLE 21

RESULTS OF FATIGUE TESTS AT ELEVATED TEMPERATURES (REVERSED DIRECT STRESSES—HAIGH MACHINE)

Material	Ref. No.	Investigator	*	Temperature of Test							
				18° C.	100° C.	200° C.	300° C.	400° C.	500° C.	600° C.	700° C.
Armco Iron (0·02% C.) Normalized	1	Tapsell & Clenshaw	E.L. (10)	11·9	10·7	11·4	14·9	12·9	5·2	—	—
			E.L. (*R*)	1·00	0·90	0·96	12·5	1·08	0·44	—	—
			L.C.	—	—	28·0	16·3	8·4	—	—	—
0·06% C. Steel	2	Lea	E.L. (5)	13·6	(12·8)	(12·8)	13·6	17·5	17·9	—	—
			E.L. (*R*)	1·00	(0·94)	(0·94)	1·0	1·29	1·32	—	—
0·14% C. Steel	3	Lea	E.L. (10)	15·0	(15·0)	15·0	17·9	18·6	16·0	14·0	—
			E.L. (*R*)	1·00	(1·00)	1·00	1·19	1·24	1·07	0·93	—
			L.C.	—	—	33·0	31·0	14·0	4·0	1·0	—
0·17% C. Steel Normalized	4	Tapsell & Clenshaw	E.L. (10)	12·5	12·3	12·3	16·0	16·8	11·7	6·8	—
			E.L. (*R*)	1·00	0·98	0·98	1·28	1·34	0·94	0·54	—
			L.C.	—	—	—	26·0	14·5	5·0	—	—
0·24% C. Steel Normalized	5	Tapsell & Clenshaw	E.L. (10)	13·3	12·3	12·3	16·0	17·0	13·0	7·3	—
			E.L. (*R*)	1·00	0·92	0·92	1·20	1·28	1·98	0·55	—
			L.C.	—	—	—	28·0	15·7	5·0	—	—
0·51% C. Steel Normalized	6	Tapsell & Clenshaw	E.L. (10)	14·7	13·9	13·9	19·3	19·2	14·3	7·2	—
			E.L. (*R*)	1·00	0·95	0·95	1·31	1·30	0·97	0·49	—
			L.C.	—	—	—	31·0	16·5	5·0	—	—

0·53% C. Cast Steel —	7	Tapsell & Clenshaw	E.L. (10)	12·2	12·9	(12·9)	13·0	(11·3)	8·7	7·0	—
			E.L. (*R*)	1·00	1·06	(1·06)	1·07	(0·93)	0·71	0·57	—
			L.C.	—	—	—	27·0	12·0	—	—	—
Ni. Cr. Steel 3¼% Ni. 0·60% Cr. 0·35% C.	8	Lea	E.L. (5)	26·0	(22·9)	(21·2)	20·0	(20·0)	20·0	19·6	18·7
			E.L. (*R*)	1·00	(0·88)	(0·82)	0·77	(0·77)	0·77	0·75	0·72
80/19 Ni. Cr. Alloy	9	Tapsell & Bradley	E.L. (10)	15·0	(15·1)	15·7	17·7	17·7	(16·5)	15·7	15·2
			E.L. (*R*)	1·0	1·01	1·05	1·18	1·18	(1·10)	1·05	1·01
			L.C.	—	—	—	—	—	24·0	15·0	6·0
70/30 Ni. Cu. Alloy (2·35% Mn.)	10	Tapsell & Bradley	E.L. (10)	15·9	13·3	12·7	12·7	(12·6)	11·7	8·9	—
			E.L. (*R*)	1·00	0·84	0·80	0·80	(0·79)	0·74	(0·56)	—
			L.C.	—	—	—	—	24·0	10·2	2·2	— 1·0
Cast Iron 1·97% G.C. 0·46% C.C. 2·07% Si.	11	Haigh	E.L. (6)	9·6 at 18° C. 8·5 at 350° C. 9·0 at 500° C.							
			E.L. (*R*)	1·00 at 18° C. 0·89 at 350° C. 0·94 at 500° C.							
0·65% C. Steel, Normalized	12	Tapsell	E.L. (10)	19·5 at 18° C. 14·9 at 300° C.							
			E.L. (*R*)	1·00 at 18° C. 0·76 at 300° C.							
Al. Si. Alloy (12·7 Si.), Cast	13	Tapsell	E.L. (10)	3·8 at 18° C. 2·8 at 180° C.							
			E.L. (*R*)	1·00 at 18° C. 0·74 at 180° C.							

* E.L. (N) = Endurance limit (tons per sq. in.) on a reversal basis of N millions

E.L. (R) = Ratio $\dfrac{\text{Endurance Limit at } t^\circ \text{ C.}}{\text{Endurance Limit at } 18^\circ \text{ C.}}$

L.C. = Limiting creep stress (static tensile), tons per sq. in.

endurance limit usually occurs between 300° C. and 450° C., while the value at 100° C. to 200° C. is generally less than that at air temperature.

The decrease in the fatigue strength is much less than the fall in the creep stress value as the temperature of the test increases. In most cases a temperature is reached at which the endurance limit is greater than the creep stress.

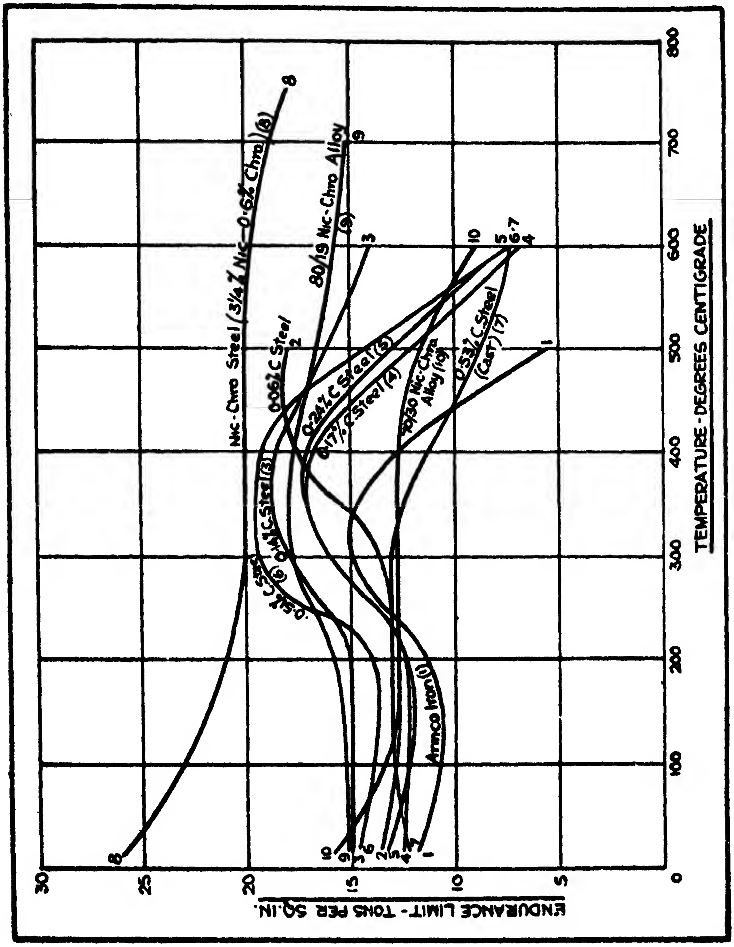

Fig. 71. Showing Graphically the Fatigue-temperature Test Results Given in Table 21

Tests made in regard to reversed bending stresses over a range of temperatures show that most alloy and medium carbon steels experience a progressive diminution of the endurance limit from 0° C. up to 500° C. to 600° C., or the lower critical temperature.

Some steels, notably 0·5 per cent carbon steel (normalized) and 3½ per cent nickel steel show a progressive, but slight, improvement in the endurance limit from 0° C. to 300° C., after which there is a more rapid diminution.

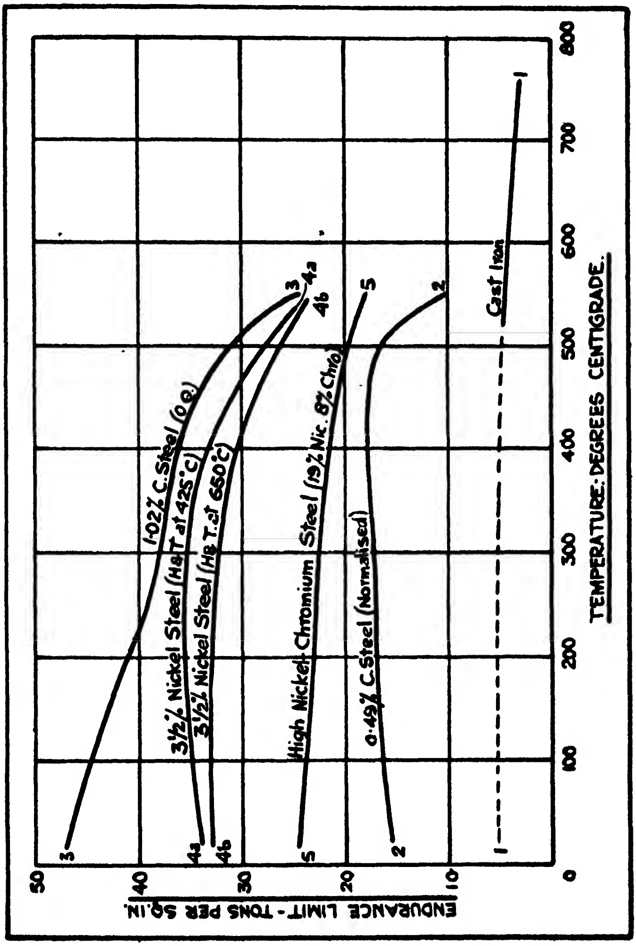

FIG. 72. ILLUSTRATING TEMPERATURE-FATIGUE STRENGTH PROPERTIES UNDER REVERSED BENDING ACTION OF DIFFERENT MATERIALS

It is an important feature in regard to fatigue testing at higher temperatures that specimens will usually withstand, at certain temperatures, without fracture, many millions of reversals of a cycle of stress of which the maximum stress is appreciably greater than the statical limiting creep stress.

The results of some of the more important reversed bending stress-temperature tests are given in Fig. 72. A comparison of these with the curves of Fig. 71 at once reveals a similarity of form, although the general endurance limit variations are not so pronounced.

In connection with the result given for cast iron, this material contained 2·76 per cent graphitic carbon, 0·68 per cent combined carbon, and 1·10 per cent silicon; it was only tested at 18° C., 600° C., and 700° C. In surveying the results of the available fatigue-temperature tests it is evident that it is uncertain whether a fatigue range exists at elevated temperatures, much of the available evidence indicating that the somewhat lengthy endurances observed under high ranges of rapidly-applied stress are probably due to a "time" or "delayed creeping" phenomenon.

High Temperature Testing Methods

In order to obtain sufficient data in regard to the behaviour of materials employed for parts designed to withstand stresses at elevated temperatures, whilst the "tensile stress, rate of creep" method is often employed in commercial test laboratories, the usual scheme of tests adopted at the National Physical Laboratory is, briefly, as follows—

(1) Determination of short-time tensile properties, including limit of proportionality, proof stresses, etc.

(2) Examination of time to fail and nature of failure under prolonged stresses.

(3) Determination of stress corresponding to a creep rate of strain of 100,000 per day, after 40 days.

In addition, it is becoming the practice to measure the amount of total deformation and the creep rate at stresses in the neighbourhood of the *actual working stresses.*

For elevated temperature tensile testing the apparatus required includes the following units—

(1) Machine to apply the tensile load to prepared test pieces and to maintain this load steady over any desired period.

(2) Apparatus to heat the test piece uniformly over its length and to maintain the temperature constant, for any desired length of time and at any given value.

(3) Means for measuring the temperature accurately at any time during a test.

(4) A sensitive and highly accurate form of extensometer, capable of giving readings of the order of 0·25 to one millionth inch per inch of gauge length.

Some typical examples of high temperature testing equipment are given in the pages that follow, but it should be pointed out that the apparatus used by various investigators and testing institutions varies considerably, whilst for special research purposes the equipment employed may be quite different from the few examples here described.

A battery of especially sensitive elevated temperature testing machines was used at the National Physical Laboratory, together with the electrical controls for accurate maintenance of the required test temperature. The loading was applied by a compound lever and the electric furnaces were designed for a maximum temperature of 800° C. Temperature control was obtained by means of a platinum resistance surrounding the specimen; this formed one arm of a Wheatstone-bridge network which controlled the current supplied to the furnace through a system of four relays. A test lasting for 2500 hours showed that the *maximum* variation of temperature in the furnace did not exceed ± ½° C. The third essential component of the apparatus consists of the specially designed extensometer shown in Fig. 73; rough measurements are made with the micrometer, while the accurate readings at very slow rates of creep are recorded by means of rhombs,

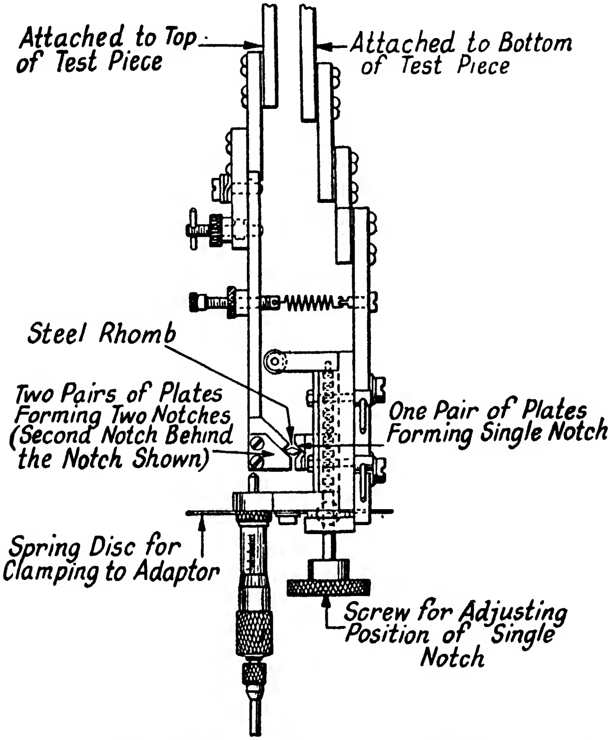

FIG. 73. EXTENSOMETER USED FOR HIGH TEMPERATURE TESTS

to which mirrors are attached, and illuminated scales and telescopes (not shown in Fig. 73). A scale reading of 0·1 mm. corresponds to a strain of the specimen of 8×10^{-7} for the normal 5 in. test piece.

Space does not permit the presentation of the very comprehensive test data that have resulted from the N.P.L. investigations; these are available in various publications* by Tapsell, Clenshaw, Bradley, Johnson, Prosser, and Remfry.

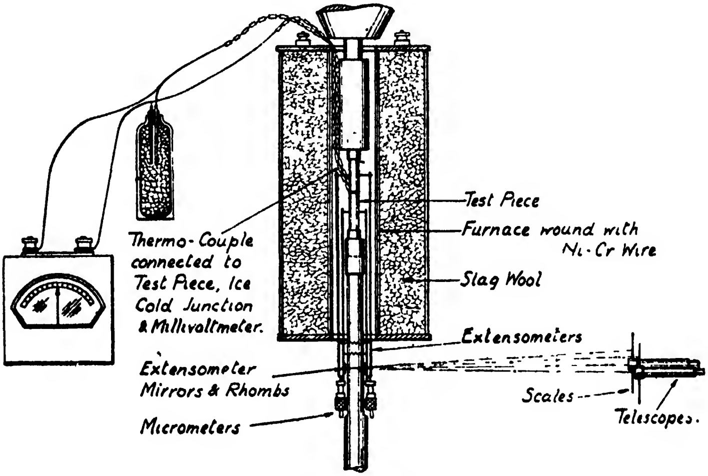

FIG. 74. ARRANGEMENT FOR HIGH TENSILE TESTS, SHOWING THERMO-COUPLE, FURNACE, AND EXTENSOMETERS

For tests extending over several hundreds of degrees Centigrade, say, it is now the practice to surround the specimen with an external heat-insulated chamber containing an electric resistance heating coil or a series of coils. The temperature of the specimen is usually measured by means of one or more thermo-couples held in contact with it.

Fig. 74 is a good example showing the arrangement of the apparatus used for tensile tests at high temperatures, by H. J. Tapsell and W. J. Clenshaw.†

The test piece was surrounded by an electric furnace 15 in. long, which consisted of a double winding of nickel-chromium wire, the coils being well spaced in the centre of the inner tube, but closed up considerably towards the ends. This method of winding, coupled with

---

* D.S.I.R. Special Engineering Reports No. 1, 2 (1927), 6 (1928), 15 (1929), 18 (1930); *Engineering*, Vol. 120, p. 614, 1925, Vol. 137, p. 212, 1934; *Proc. Soc. Chem. Ind.*, 10th February, 1933; *Journ. Inst. Metals*, Vol. 35, p. 75, 1926; *Jour. I. & S. Inst.*, Vol. 117, p. 275, 1928.

† "Properties of Materials at High Temperatures," *Engineering Research Report No.* 1, Dept. Indus. and Scient. Research, 1927.

the use of a furnace tube of wide bore, gave a fairly uniform temperature along the test piece. When the centre of the test piece was at 600° C. the end temperatures were 597° C. at the top and 595° C. at the bottom. At lower temperatures the variation was of the same order. The arrangement of test piece, furnace, and extensometers is shown in Fig. 75.

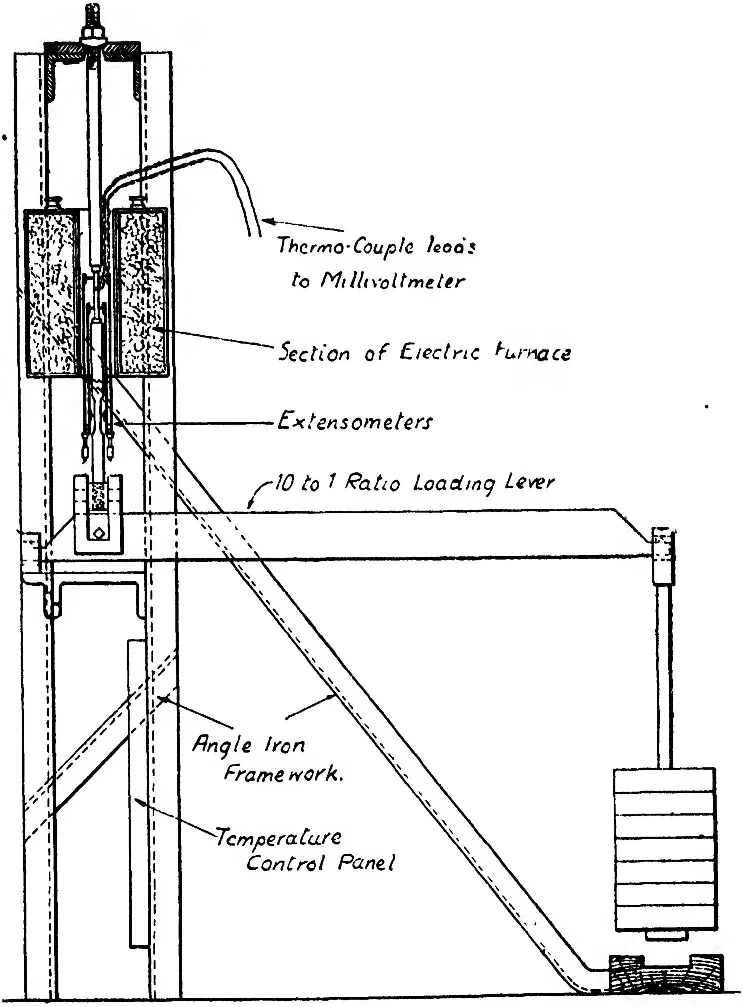

Fig. 75. General Arrangement of Loading Apparatus, Furnace, and Extensometers

Special mirror extensometers, shown in Fig. 75 and in more detail in Fig. 76, were fitted to the test piece for the purpose of determining the limit of proportionality and the modulus of elasticity. Extensions were measured on a gauge length of 2 in., and were determined by the tilting of the mirrors indicated by the scales and telescopes used.

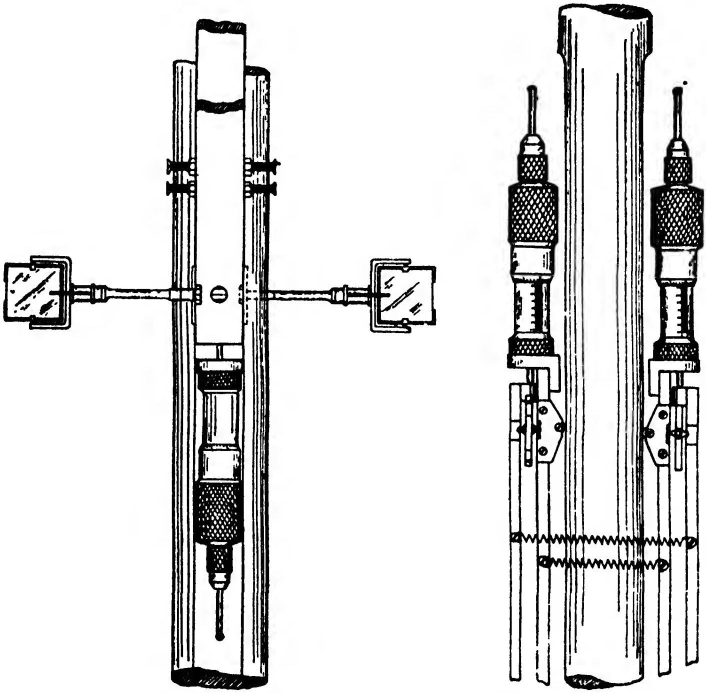

FIG. 76. DETAILS OF EXTENSOMETER MIRRORS AND MICROMETERS

The temperature of the test piece was measured by means of a platinum, platinum-rhodium thermo-couple, connected to a millivoltmeter, the cold junction being maintained at 0° C. The thermocouple wire was encased in small sections of fireclay tube, and the actual couple was tied with asbestos string to the centre of the test piece so as to be in intimate contact with it. All the thermo-couples and millivoltmeters were carefully calibrated before use, and gave readings correct to ± 3° C. After carrying out a number of tests the couples were recalibrated, but never gave readings differing by more than 2° C. from those of the original calibrations.

To obtain a temperature of 600° C. a heating period of 3 to 4 hours was required. At all temperatures it was necessary to allow a soaking period of ½ to 1 hour for temperature conditions to become steady. Steadiness of temperature was indicated when no changes were found to occur with time in the readings given by the mirror extensometers.

In connection with the creep tests of materials at different temperatures it is not always convenient to employ an expensive testing machine, in view of the long periods of time occupied by these tests. Usually a simple type of machine with a high ratio leverage, i.e. 10 to 1 to 100 to 1, can be devised for the purpose.

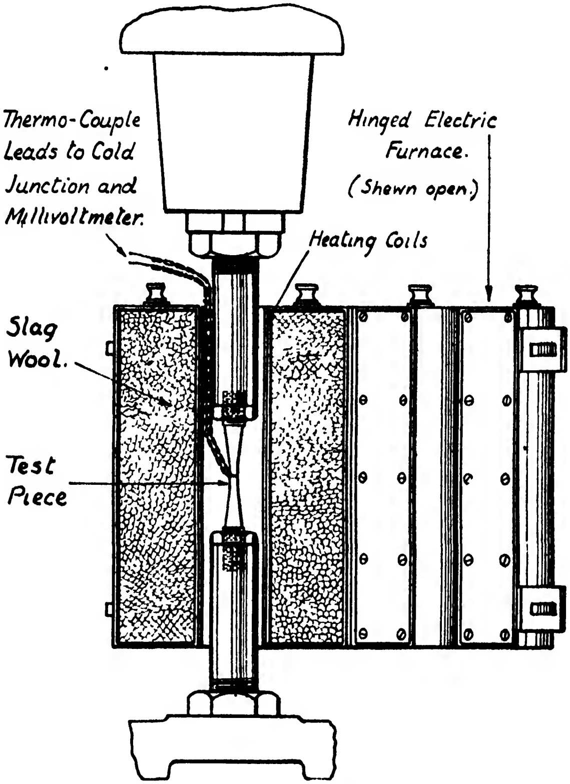

FIG. 77. ILLUSTRATING METHOD OF MAKING HIGH TEMPERATURE FATIGUE TENSILE TESTS IN HAIGH ALTERNATING STRESS MACHINE

The actual arrangement employed by Tapsell and Clenshaw for creep tests at high temperature is that shown in Fig. 75. Here the load was applied by means of a simple lever having a 10 to 1 leverage. The upper end of the specimen was fixed to a rod, the latter being hung by means of a nut and spherical washer to an overhead support;

this ensured freedom of movement, and therefore did not constrain the specimen laterally.

The specimen was enclosed in a cylindrical chamber containing the heating resistance and a thermo-couple for measuring the temperature. The heating resistance wire consisted of a winding of nickel-chromium wire round a tube of nickel-chromium alloy insulated therefrom with mica sheet. A special temperature control was employed to keep the temperature within 2° C. on either side of the mean.

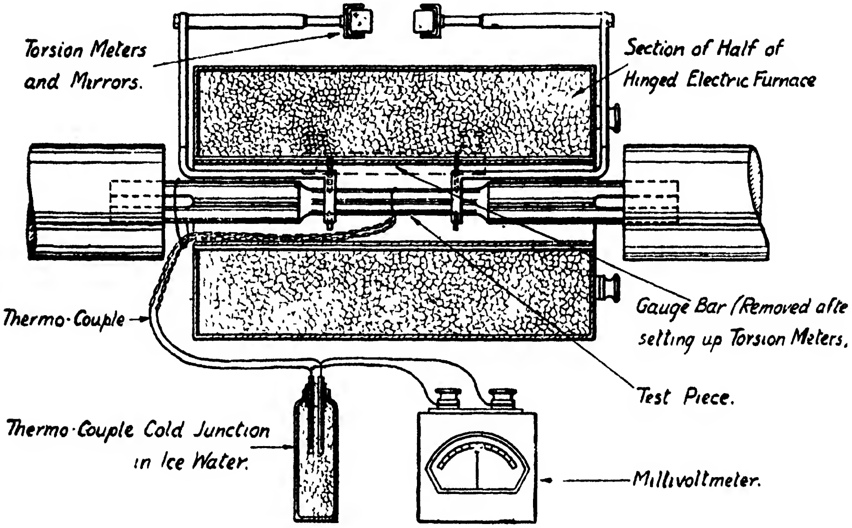

FIG. 78. ARRANGEMENT FOR HIGH TEMPERATURE TORSION TESTS

High temperature extensometers were fitted to the test pieces, so that the extensions on 2-in. gauge lengths within the furnaces could be measured at intervals throughout the tests. Small extensions were measured by the mirror system and larger ones by the micrometers.

Fig. 77 shows the arrangement of the apparatus used for making fatigue tests at high temperatures in the Haigh alternating stress machine.

Fig. 78 shows how high temperature torsion tests were made with a somewhat similar heating and temperature measuring apparatus to that shown in Fig. 74. The N.P.L. type torsion meters are shown in the upper part of the illustration.

The apparatus used for long period elevated temperature tests at the Brown-Firth Research Laboratory, Sheffield* is shown in Figs. 79 to 82.

---

* "Apparatus for Long Period Temperature-stress Tests on Metals," W. H. Hatfield, G. Stanfield, J. Woolman, and N. B. McGregor, *Journ. Scient. Insts.*, May, 1932.

The loading device, shown diagrammatically in Fig. 79, consists of a single lever machine having a framework built up from channel and angle sections. The overall height is 7 ft. 6 in., and the lever is a 20 : 1 lever provided with knife edges for carrying the added load. The weight of the lever itself is 30 lb. which by itself applies a load of 300 lb. to the test piece. The machine accommodates a test piece of 12 in. length, usually made with an 8 in. parallel gauge length which may be varied in diameter according to material and temperature of test being employed, but is usually 0·357 in. diameter. The screwed ends of the test piece are held by suitable grips. The furnace for heating the specimens can be raised and lowered on the frame after fixing the test piece and the extensometer in position. By means of a stop screw placed on the machine underneath the lever, the load can be applied or released very gradually.

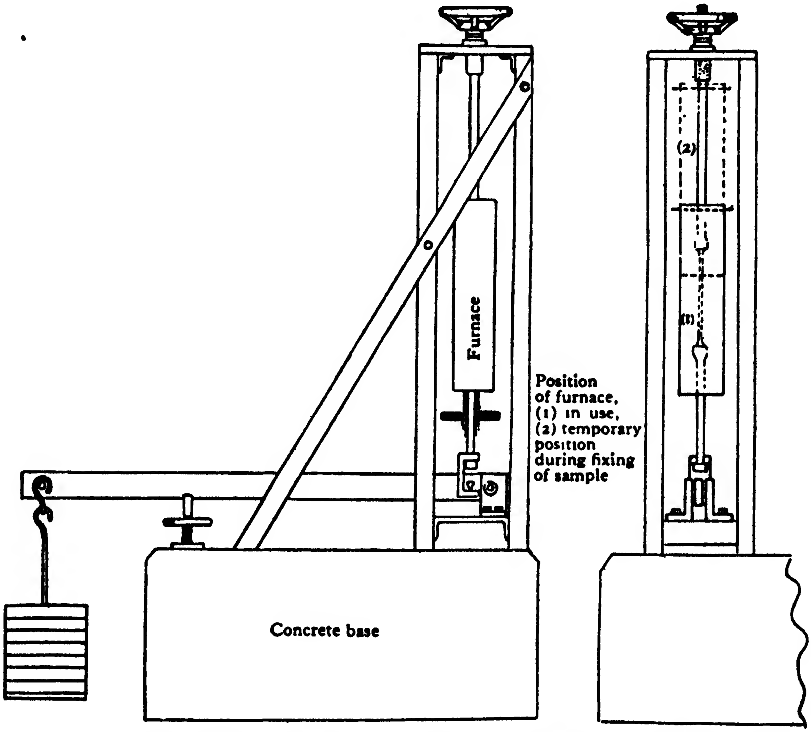

Fig. 79. Apparatus used at Brown-Firth Research Laboratory for High Temperature Tests

Heating of the test piece is provided by an electric resistance furnace consisting of a mild steel tube of 3 in. diameter which is surrounded by nichrome wire windings of 20 gauge divided into three portions, the current in which can be separately controlled, these being adjusted so as to give uniform heating over the length of the test piece. A number of silica tubes placed parallel to the axis of the furnace separate the windings from the steel tube, and are held in position by alundum cement. Surrounding this is a depth of rope asbestos lagging, making a total furnace diameter of about 5 in. Uniformity of temperature along the length of the furnace is obtained within ± ¼°.

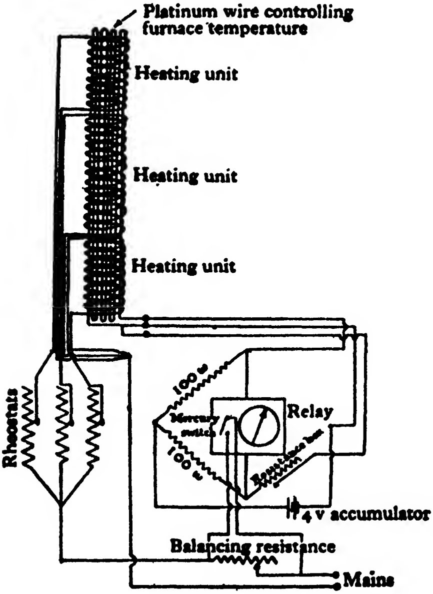

Fig. 80. Automatic Temperature Control and Heating Circuit

The combined heating current for the three portions of the furnace winding is further controlled by an external resistance, a portion of which is cut in or out by the automatic temperature control. The balancing resistance is so arranged that the difference between resistance in and resistance out corresponds to 0·1° C. on the furnace temperature, and the furnace temperature actually keeps well within this limit after it has once become steady after setting.

The automatic temperature control and heating circuits are shown in Fig. 80. The temperature control is operated from a platinum resistance arranged in silica tubes along the length of the furnace to give average furnace temperatures. The resistance used was 40 ft. of platinum wire of 0·1 mm. diameter and about 200 ohms resistance and constituted one arm of a Wheatstone bridge. The out-of-balance current of the latter was made to operate, by means of an "Electroflo" control indicator, a mercury switch connected across the balancing resistance. The relay of the control indicator was actuated by a "chopper bar" worked from a continuously running A.C. electric motor, the position of the needle of the indicator at the moment of action determining the switching in or out of resistance. The fourth arm of the bridge was a post office type resistance box, the plugs in which were used to give the desired furnace temperature. The actual specimen temperature measurement was made by independent platinum, platinum-rhodium thermo-couples fixed to the test piece connected to a potentiometer capable of measuring to an equivalent of 0·005° C.

The extensometer (Fig. 81) is a modification of the Lamb roller-type designed specially for use at high temperatures. The parts are made of high-speed steel, hardened and tempered at 640° C. The scale, placed 20 ft. from the mirrors, is viewed by reflection from both mirrors by a telescope fitted with cross wires, and is curved to the requisite radius so that the magnification of the mirror system is constant over the whole length of the scale. The rollers carrying the mirrors are each $\frac{1}{8}$ in. in diameter. One millimetre on the scale represents 0·000005 in. extension, and fractions of scale divisions can be easily read.

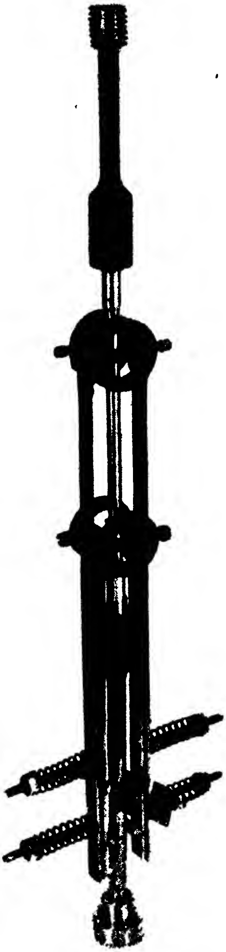

FIG. 81. EXTENSOMETER USED FOR HIGH TEMPERATURE TESTS

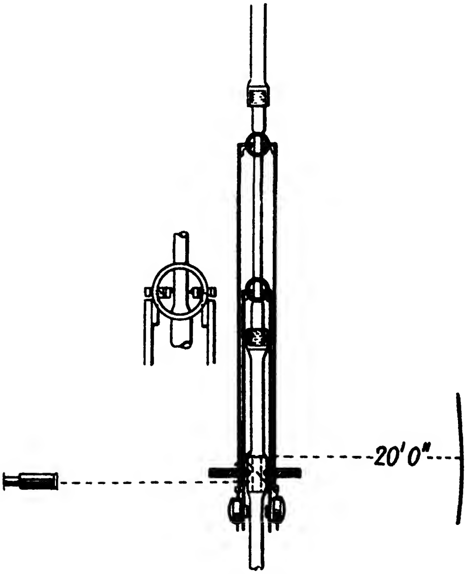

FIG. 82. METHOD OF TAKING READINGS OF EXTENSOMETER USED IN HIGH TEMPERATURE TESTS

It will be seen that half a millimetre on the scale corresponds to 0·0000025 in. actual extension or 0·3 millionths per 1 in. of gauge length. Fig. 82 indicates the general arrangement of the extensometer.

As it was important to ensure accurate regulation of the specimen temperature, since a variation of $\frac{1}{10}$° C. caused a thermal expansion of more than a millionth inch per inch of gauge length, special arrangements were made to keep the room temperature and specimen temperature control as accurate as possible.

Electronic Method of Creep Measurements

An automatic method of measuring the creep or extension of metals, used in the laboratories of the General Electric Company of America, utilizes the light variations of a photo-electric cell to measure the extensions.

The metal under test is made in the form of a small diameter wire which is suspended vertically within a glass tube that can be filled with nitrogen in order to prevent air oxidation effects. The load is applied by means of a weight attached to the lower end of the wire. The temperature of the latter is raised by passing an electric current through it, so that temperatures up to about 1050° C. can be maintained. Formerly the extensions were measured by means of a microscope focused on to a spot on the wire, but more recently it has been found possible to dispense with an operator, by using the photo-electric method. In this a glass grid ruled in black with horizontal lines $\frac{1}{250}$ in. apart is attached to the lower end of the specimen at a known distance from its upper attachment. Another identical ruled glass grid is fixed close to that on the wire so that the surfaces nearly touch and the lines on this grid are parallel to those on the wire grid. A parallel beam of light illuminates the double grid and a lens forms an image of these on the surface of a photo-electric cell. When the bar of one grid is opposite the space of the other no light passes through on to the photo-electric cell, but when the bars are opposite each other the maximum amount of light passes through. As the photo-electric cell converts these variations into voltage ones, the latter can be amplified and employed to actuate a needle which makes a record of these voltage—and therefore light—variations on a strip of moving paper. The resulting graph shows not only movements of the loaded wire of $\frac{1}{250}$ in. corresponding to the movement of a bar on the wire to a space on the fixed grid, but also the intermediate movements. In this way it is possible to make records of elongation enabling measurements of 0·0001 in. to be taken.

The Lead Beam Creep Study Method

It is possible to study the behaviour of metals at elevated temperatures under bending action by making use of a metal such as lead possessing a relatively low melting point, since it has been shown that the behaviour of such a metal at air temperatures is equivalent to that of steel at elevated temperatures.

In some tests* made at the National Physical Laboratory a beam of lead was subjected to pure bending couples and its behaviour studied. It was found that plane sections remained plane and also that the behaviour of the complete beam could be computed with a fair degree of accuracy solely from stress-strain relations, deduced by simple tensile tests on samples cut from the beam. A detailed account of these experiments is given in the article referred to in the footnote.

Strengths of Non-Ferrous Metals at Elevated Temperatures

It is not possible here to deal with this subject, but a good deal of data on aluminium, magnesium, copper and nickel alloys are given in Volume II of this work.

---

* Tapsell and Johnson, *Journ. Inst. Metals*, Vol. 57, 1935.

CHAPTER V

THE FAILURE OF MATERIALS UNDER TEST

THERE are three principal theories of failure—namely—

(1) That elastic failure occurs for a certain value of the maximum principal stress.

(2) That it occurs for a certain value of the principal strain.

(3) That it occurs for a certain value of the maximum shear stress.

The results of most experiments tend to confirm the belief that failure in the case of ductile materials such as iron and steel occurs by shear, and in brittle materials such as cast iron, concrete, or brick, by tension.

1. **Maximum Stress Theory.** The maximum value of the principal stress p, in the case of a material subjected to a tensile stress p_1, is given by—

$$p = \frac{p_1}{2} + \sqrt{\frac{p_1^2}{4} + q^2}$$

where q is the shearing stress.

2. **Maximum Strain Theory.** The principal strain under these circumstances, on the St. Venant hypothesis, is given by—

$$e = \tfrac{1}{2} \cdot \frac{p_1}{E}\left(1 - \frac{1}{m}\right) + \frac{1}{E}\sqrt{\frac{p_1^2}{4} + q^2}\left(1 + \frac{1}{m}\right)$$

where $\frac{1}{m}$ is Poisson's ratio.

For the usual value of $\frac{1}{4}$ for Poisson's ratio—

$$e = \frac{1}{E}\left[0{\cdot}375p_1 + 1{\cdot}25\sqrt{\frac{p_1^2}{4} + q^2}\right]$$

The limiting case is obtained by putting $p_1 = 0$, which gives $p = \frac{5}{4} \cdot q$—that is to say, a shear stress equal to four-fifths of the tensile strength.

Another interesting result follows from St. Venant's theory of strain failure, namely, that in the case of a homogeneous material subjected to three stresses p_1, p_2, and p_3 mutually at right angles, the corresponding strains, e_1, e_2, and e_3 are given by the relations—

$$Ee_1 = p_1 - \frac{1}{m}(p_2 + p_3)$$

$$Ee_2 = p_2 - \frac{1}{m}(p_3 + p_1)$$

$$Ee_3 = p_3 - \frac{1}{m}(p_1 + p_2)$$

Under the simplest condition of tensile stress we have $p_2 = p_3 = 0$, and then

$$Ee_1 = p_1, \text{ or } E = \frac{p_1}{e}$$

This expresses the fact that the ratio of the stress p_1 to the strain caused, e_1, is the elastic modulus. For the strain theory of failure to hold, the material must, theoretically, be isotropic, and obey the law of Hooke in regard to stress and strain.

3. **Maximum Shear Theory.** The shear stress theory* attributing failure to shear alone is based upon the relation—

$$q_1 = \sqrt{\frac{p_1^2}{4} + q^2}$$

where q_1 is the equivalent shear stress.

The limiting case is obtained by putting $q = 0$, which gives $p_1 = 2q_1$, or a shearing stress value equal to one-half of the tensile strength.

The maximum shear in this case occurs in a plane of 45°. Guest,† who followed up the original theory of shear failure laid down by Coulomb in 1776, came to the same conclusions regarding the inclination of the plane of maximum shear stress and the value of the shearing stress being one-half the tensile stress. Later work by Seely and Putnum,‡ Becker‖ and others indicates that the ratio of elastic shearing stress to tensile stress at failure is rather higher than 0·5, namely, from 0·55 to 0·65 for steels. These results led Becker to the conclusion that at the yield point the strength is in accordance with the *maximum strain theory*, until the shearing stress reaches the value of the shearing yield point. After this, failure is believed to occur according to the *maximum shear theory*.

Perry's Theory of Shear Failure

Professor Perry§ introduced the conception of friction into the maximum shear stress theory, by including a term to take into account

---

[*] Formulated by Guest and Fresca.

[†] Guest, "Strength of Materials under Combined Stresses," *Phil. Mag.*, July, 1900.

[‡] *University of Illinois Bulletin*, No. 115, 10th November, 1919.

[‖] *University of Illinois Bulletin*, No. 85, 10th April, 1916.

[§] Professor Perry, *Applied Mechanics*.

the friction along the shearing plane. He assumed that the friction was proportional to the stress and perpendicular to the plane of shear.

It is easy to show that if μ = the coefficient of friction and θ the angle of inclination of the shear plane as found by experiment, then—

$$\theta = 45^\circ \pm \frac{\phi}{2}, \text{ where } \tan\phi = \mu$$

The positive sign refers to tension and the negative sign to compression failure.

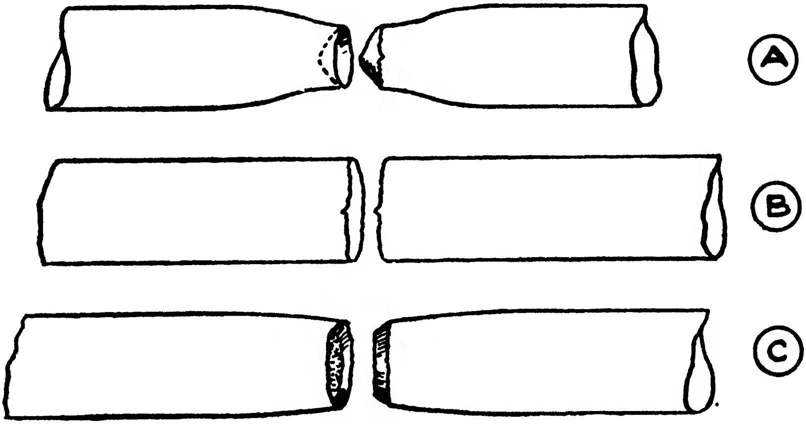

FIG. 83. ILLUSTRATING MODES OF FAILURE

(*A*) Ductile. (*B*) Non-ductile, or brittle. (*C*) Semi-ductile.

For brittle materials, such as cast iron, it is found that fracture occurs for values of θ greater than 45°. Thus for cast iron the angle found was 54° to 55° corresponding to a value of the coefficient of friction $\mu = 0{\cdot}35$.

In the case of ductile materials, such as iron and mild steel, the angle θ was given by Perry as 90° for tension. For compression the corresponding value of $\theta = 30^\circ$; these results are obtained by making $\theta = \phi$.

The Strain Energy Theory

An alternative theory advanced by Haigh[*] to explain the failure of materials under complex stresses assumes that the elastic limit of the metal is reached when the energy per unit volume reaches a certain definite maximum value. The results of experiments in many cases appear to conform to this theory rather better than the theories previously enunciated.

---

[*] Haigh, "The Strain Energy Function and the Elastic Limit," *Brit. Assoc. Rep.*, 1919.

Nature of Actual Failure

In the case of *ductile materials*, such as wrought iron, mild steel, rolled copper, and similar metals, failure in tension tests often consists of a reduction of area resultant upon the flow of metal, and a fracture at the minimum section, with the formation of a conical projection roughly of 45° side inclination, together with a conical recess, corresponding to the crater (Fig. 83, A).

The usual type of fracture for a tensile test piece of cylindrical shape is that shown in Fig. 84. This shape is only obtained when the material is homogeneous and free from flaws, and the loading truly axial. The actual shapes of the broken pieces are those of truncated cones and corresponding cup-shaped depressions. The sides of the conical parts are not usually linear but conoidal or curved.

Referring to Fig. 84, a typical fracture for a cylindrical specimen would be along the surface indicated by *aefc*, one side being the positive truncated conoid; the other side is the corresponding negative surface shape.

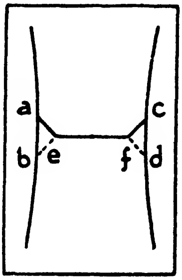

FIG. 84. ILLUSTRATING NATURE OF FAILURE OF DUCTILE METALS IN TENSION

The initial stage in tensile fracture is a fairly clean break across the central cross-section due to the greater stress intensity there. This is followed by a cracking along either *aefc*, or *befd*, according to which is the weaker; usually a small defect on one side determines which side shall form the cup and which the cone. Very hard fine texture metals show the minimum of conical surface, whilst coarse ductile ones give marked "cupping" at fracture.

In the case of *non-ductile materials*, failure occurs by a separation across a plane normal to the axis of pull, with little or no reduction of area or elongation. Cast iron and cast steel usually exhibit these properties. Semi-ductile materials yield by a combination of the two methods—namely, a normal yield by direct tension of the central core, surrounded by a ring of metal failing by direct shearing, so as to leave a crater effect with a flat bottom, as shown in diagram C, Fig. 83.

Compression Failure

When a *ductile material* is tested in compression, if the length is more than four or five times the maximum width, there is no real failure, but a yielding by buckling, or secondary flexure, at a lower value of the stress than the true ultimate compressive stress. The failure of mild steel tubes under compressive load is an example of the case in point.

The longer the length, for a given cross-section, the lower will be the "buckling stress" value.

When the length is less than three or four times the minimum width, the failure by compression is due to "bulging," or lateral expansion, due to the flowing out laterally of the material, as shown in Fig. 85.

The surfaces at which the load is applied become enlarged as the load increases, so that for this reason the actual stress is reduced for a given load. It follows that to continue the process of lateral flow, the load must be increased at a more rapid rate as the surfaces enlarge. For a perfectly ductile material there would be no limit to the amount of lateral bulging, and therefore no true ultimate compressive stress.

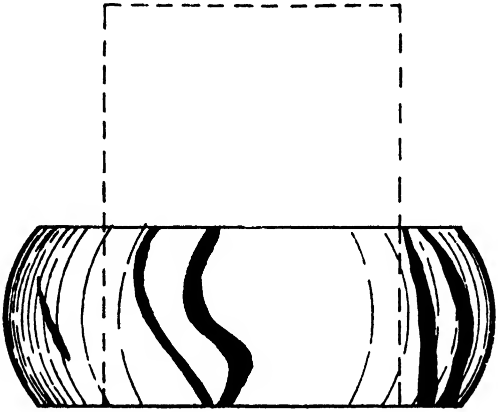

FIG. 85. COMPRESSION FAILURE OF DUCTILE MATERIAL

In most ductile materials of commerce, such as mild steel, copper, and similar materials, there occurs a stage at which cracks appear upon the surface, as shown in Fig. 85, these cracks being accentuated in the case of fibrous or faulty materials.

Lateral yielding in the above cases is resisted by the frictional resistance between the surfaces of contact, which varies with the degree of roughness of the surfaces and with the compression load. For this reason the ends of a compression cylinder or specimen of a ductile material cannot flow laterally at the same rate as the central portions, so that a barrel-like shape is formed, as shown in Figs. 85 and 86. The latter figure illustrates the effects of compression stresses of 9000 lb. per sq. in. upon two equal cylinders of white-metal identical in composition, the centre specimen being cast by the Eatonia process, whilst the right-hand one was poured in the ordinary manner.

Brittle materials, such as cast iron, cement, and certain timbers, usually fail in compression by shearing and sliding along faces inclined to the axis of push. When the length of the test piece is not less than one-and-a-half times the width, failure occurs by a simple shear fracture, diagonally, at an angle varying from 50° to 70° (for most materials) to the axis of push, so that the specimen is divided into two wedge-like parts.

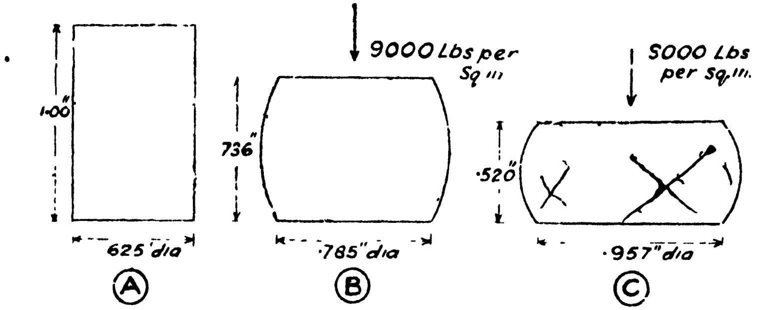

Fig. 86. Failure of Plastic Material under Compression

For a smaller length-to-width ratio, failure occurs by the simultaneous shearing of the material over several planes, so that wedges or cones of the material forming the sides are split off; and if the test is stopped at this stage, the remainder of the material, for very brittle substances, is left in the form of two cones of pyramids having as bases the surfaces of load application, and with contiguous apices, as shown in Fig. 87.

The breaking stress in this case is greater than in the preceding cases, and increases as the height is reduced, so that the plane of minimum resistance to shear cuts the faces at which the pressure is applied. Hodgkinson found that the ultimate compressive strength of cast-iron cylinders varied from 69·3 to 34·4 tons per sq. in. for height-diameter ratios varying from $\frac{1}{4}$ to $7\frac{1}{2}$, respectively.

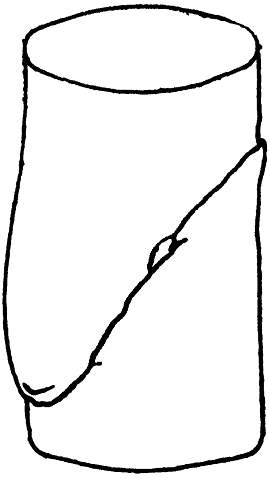

Fig. 87

When a smooth or polished specimen of mild steel or copper is tested in tension past the elastic limit, or when a tube of a brittle* or semi-brittle material is tested in compression, lines appear upon the surface of the specimen, approximately spiral in form, and inclined at an angle of about 45° to the axis. Two systems of such lines mutually at right angles are usually found.

---

* Such as glass.

These lines, or cracks, which indicate local yielding or failure by shear, are known as Lüder's or Hartmann's lines. A typical example is shown in Fig. 88 for the case of a mild steel tube in compression.

The angle of shear failure appears to be greater than 45° in most cases; thus, in the case of some cast iron compression tests made by Hodgkinson the average inclination was about 55°, whilst other tests upon bricks gave angles varying from 58° to 62°. The range of inclinations of these slip bands was observed by Hartmann to lie between 58° and 65° for various metals. These results certainly appear to support the explanation advanced by Perry.*

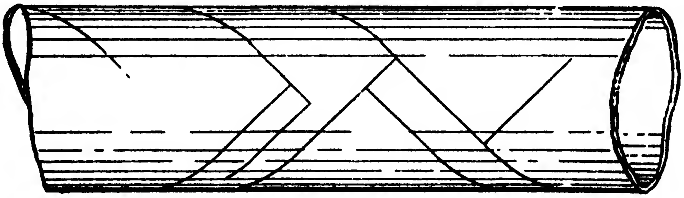

FIG. 88. LÜDER'S LINES ON STRESSED BRITTLE TUBE

If the matter be examined from the point of view of the principal stresses and planes occurring, then, referring once again to the case of a simple normal stress, considered on page 17, it will be seen that although the maximum shearing stresses occur over planes inclined at 45° with the axis, yet the effect of the normal stresses upon these planes is to resist shearing, owing to the internal frictional resistance of the particles, so that sliding or yielding by shear occurs over planes inclined at a greater angle than 45°. The theoretical angle, as deduced *from a consideration of the principal stresses, maximum shear stress,* and the tangential frictional resistance of the particles, has been shown to be $45° \pm \frac{\phi}{2}$, where $\tan \phi = \mu$, the frictional coefficient.

Results of Microscopic Examination of the Metal

The behaviour of the material under stress may readily be studied by examining the polished surface, which has been lightly etched, under the microscope.

The normal structure of a metal consists of a number of crystalline grains all joined together; each grain contains a definite arrangement or orientation of particles. The effect of a tensile stress is to elongate the crystals in the direction of pull.

The subject of the structure of metals under stress has been

---

* *Vide* p. 131.

carefully investigated by Ewing and Rosenhain,[*] and the following extract[†] may be of interest—

"Microscopic observations have demonstrated that the manner in which a metal yields when it takes any kind of permanent set is by slips occurring on 'gliding' surfaces within each of the crystalline grains. These slips show themselves on a polished surface by developing systems of parallel lines or narrow bands, each of which is a step caused by one portion of the grain slipping over the neighbouring portion. Two, three, and even four systems of slip lines may be traced when the metal is considerably strained. Plasticity results from these slips, although the elementary portions of the crystals retain their primitive form, and the crystalline structure of the metal as a whole is preserved. In some metals, in addition to simple slips, or motions of pure translation, there is a molecular rotation resulting from strain which gives rise to the production of 'twin' crystals. Apart from this, however, the occurrence of slips on three or more planes within each grain suffices to allow the grain to change its form to any extent as the process of straining proceeds."

The process of annealing an overstrained metal results in the loss of elongation, and reversion to the primitive arrangement of the crystals; the crystals will be coarse or fine according as the cooling after annealing is fast or slow.

The bands, or Lüder lines, are not actually the slip lines of the separate crystals, but are the integral effects or results of the component crystalline slips.

Shearing Strength of Metals

The resistance to shearing is invariably less than to direct tension or compression in the case of metals; it also varies in the case of *rolled plates according to the direction of rolling, being less when the* planes of shearing lie along this direction.

In the case of some Bessemer steel boiler plate tested by Bauschinger, it was found that the shearing strengths across the directions of rolling were 26·45 and 27·35 tons per sq. in., whilst in the rolling direction they were 21·45 and 22·90 tons per sq. in., respectively.

The shearing strength of steels varies from about 0·65 to 0·80 of the tensile strength; thus, in the case of mild steel plate of 26·9 tons per sq. in. tensile strength and 34·7 per cent elongation, the shearing strength was 21 tons per sq. in.

For crucible steel (0·8 carbon) the tensile and shear strengths are 60 and 38 tons per sq. in. respectively.

---

[*] *Phil. Trans. Roy. Soc.*, vol. cxciii, p. 279.

[†] J. A. Ewing, "The Strength of Materials," *Proc. Roy. Soc.*, p. 46, 16th March and 18th May, 1899.

TABLE 22

SHEARING STRENGTHS OF METALS

Material	Shearing Strength in Tons per sq. in.
Cast iron	12 to 16*
Wrought iron bars	14 to 18
Wrought iron plates (with fibre)	16
Wrought iron plates (across fibre)	14
Mild steel, structural	18 to 22
Mild steel, rivets	15 to 18
Cast steel (hardened)	40 to 50
Gunmetal	13 to 17
Brass	8 to 10
Phosphor bronze	24
Aluminium, rolled	5 to 7
Aluminium bronze	25

The resistance to shearing of cast iron is imperfectly known, some experiments revealing a lower value than for the tensile strength, whilst some have given a greater value. Izod† found that the shearing strength varied from 1·10 to 1·50 times the tensile strength.

The shearing strength of rolled phosphor bronze varies from 50,000 lb. to 60,000 lb. per sq. in.

TABLE 23

RELATION BETWEEN SHEARING AND TENSILE STRENGTHS OF CARBON STEELS

Percentage of Carbon	Tensile Strength, Tons per sq. in.	Elastic Limit, Tons per sq. in.	Extension per cent on 16 in.	Shearing Strength, Tons per sq. in.
0·14	28·1	18	22	21·7
0·19	30·4	21	20	23·6
0·46	33·8	22	18	22·8
0·55	35·9	21	18	25·4
0·66	40·0	24	14	27·2
0·80	45·9	25	9	30·6
0·87	46·7	27	8	31·7
0·96	52·7	31	7	37·0

Note. The above results were obtained by Bauschinger with carbon steels made by the Bessemer process.

---

* Izod.

† *Proc. Inst. Mech. Engineers*, 1905.

Failure of Beams

The ordinary engineer's bending theory discussed in Chapter I is based upon certain assumptions, one of which is that the stress and strain of the material of the beam must obey Hooke's law—namely, that the two are directly proportional. This relation only holds for certain ductile materials, up to the elastic limit, and does not hold for non-ductile materials such as cast iron, very hard steel, and timber.

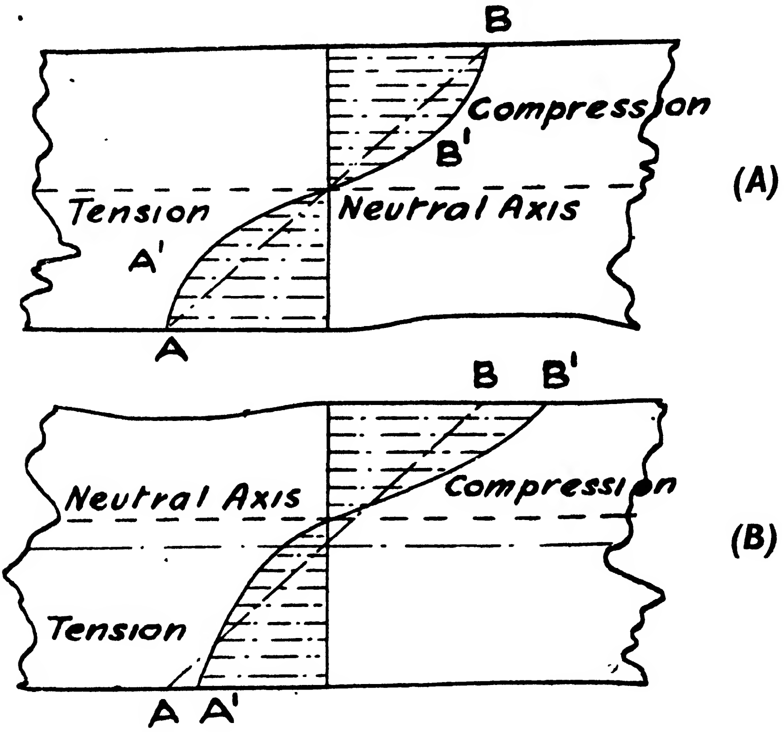

FIG. 89. STRESS DISTRIBUTION IN BEAM SECTION
(A) Ductile materials; (B) non-ductile materials.

The results obtained, on these assumptions, therefore, can only apply to cases of bending within the elastic limits for ductile materials.

Beyond the elastic limit, the distribution of normal stress over the cross-section of a beam, instead of being represented by the dotted straight line AB shown in Fig. 89, is that shown by the full line A^1B^1. Diagram A represents the case of a ductile material, such as mild steel, in which the elastic limit in tension is the same as in compression. Diagram B refers to the case of a non-ductile material, such as cast iron, which is considerably stronger in compression and which does not obey Hooke's law; in this case the neutral axis approaches the compression side.

In order to predict the breaking stress, in the case of beams tested to fracture, the law of behaviour of the material in compression and tension beyond the elastic limit must be known.

The ordinary beam theory gives the value of the maximum stress p at any section, at which the B.M. is M, as

$$p = \frac{My}{I}$$

where y = distance of extreme layer of fibre from the neutral axis, and I is the moment of inertia of the section about the neutral axis.

If, now, the value of the B.M. causing fracture be denoted by M_1, then the imaginary stress p_1 caused by this B.M. is often calculated from the above formula, viz.—

$$p_1 = \frac{M_1 \cdot y}{I}$$

It has already been pointed out that the ordinary beam theory results do not apply to cases of bending beyond the elastic limits, but this method of expressing the ultimate strength of beams is often a convenient one.

The stress p_1 is known as the *Bending Stress*, or *Strength*, or more generally as the *Modulus of Rupture*.

Its value is in general appreciably higher than the ultimate strength in tension, and for the same material it varies with the shape of the section. In expressing bending strengths it is usual, therefore, to specify the shape of the section; usually it is rectangular.

In the case of an I beam, in which the web area is small compared with that of each flange, the stress over each flange is practically uniform, and for a plastic material like wrought iron or mild steel, in which the tensile and compressive strengths are equal, the bending strength will be very nearly equal to either of these.

For rectangular beams it is probable that the stress distribution at fracture is nearly uniform over each half of the section, in which case the moment of resistance $M_1 = \frac{1}{4}p\,bd^2$, whereas upon the ordinary beam theory its value should be $M_1 = \frac{1}{6}p\,bd^2$. The value of the bending strength on this assumption is $1\frac{1}{2}$ times the ultimate tensile or compressive strength; actually it is very nearly this value.

The relation between the tensile strength f_t and the modulus of rupture p_1 for cast iron (of the same composition) is given by C. Bach as—

$$p_1 = k \cdot f_t \sqrt{\frac{y}{z}}$$

where y = distance from neutral axis to the tension edge

z = strength modulus of section

The value of the constant k varies from 1·2 for rectangular sections and **I** sections, to about 1·33 for curved contour sections.

It has been found that for cast iron the value of p_1 is greater for smaller rectangular sections than for larger ones of the same proportions; thus, the respective values for p_1 for square cast iron beams of sides 1 in., 2 in., and 3 in., were found by D. K. Clark to be 20·41, 14·43, and 12·92 tons per sq. in. respectively.

The results of tests* upon differently proportioned rectangular sections showed that wide and shallow sections give a higher value for p_1 than narrow and deep sections, and that the circular section has a higher p_1 value than a rectangular.

Values of the bending and tensile strengths of typical materials are given in Table 24.

TABLE 24

MODULUS OF RUPTURE VALUES

Material	Ultimate Strength in Tons per sq. in.		
	Tension	Bending	Compression
Cast iron—			
1 in. × 1 in. deep	7- 13	20·41	50–70
1 in. × 2 in. deep		22·60	
1 in. × 3 in. deep		15·45	
Circular, 2 in. diameter		24·28	
Mild steel—			
1 in. × 1 in.	0·28	34·00	—
Gunmetal—			
96·3 copper; 3·7 tin	14·29	14·83	—
80 copper; 20 tin	14·72	25·32	—
Brass—			
82·5 copper; 17·5 zinc	14·55	10·35	—
60 copper; 40 zinc	17·40	18·33	—
45 copper; 55 zinc	21·63	10·78	—

The Bend Test

Material, in the form of bars, sheet or strip, is often tested by bending to a specified angle, as an alternative or additional test to the

---

* W. C. Unwin, *The Testing of Materials*, p. 292.

tensile one. In particular, the bend test is valuable in the case of materials that are to be used for engineering components loaded as beams. Further, the bend test is regarded by some authorities as having certain advantages over the tensile test as a guide to the ductility value of metals such as mild steel and iron. Thus, in the tensile method of testing the elongation varies with the gauge length and neither the percentage elongation nor the reduction of area is an absolute guide to the ductility value of a material.

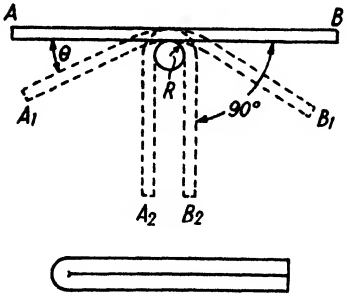

FIG. 90

When a bar of ductile material *AB* (Fig. 90) is bent, gradually, from its initial straight form, over a cylindrical former of radius *R* to a position such as that shown at A_1B_1, the "fibres" on the upper side are stretched, initially, within the elastic limit, for very small values of the angle θ and eventually beyond the elastic limit and yield point. The angle θ at which this occurs in the case of iron and steel test specimens is a comparatively small one, as will be evident from a consideration of the large amount of stretch possible for small degrees of bending. Thereafter, the whole of the bending occurs within the plastic range, i.e. between the yield point and ultimate tensile stress range, so that the material does not obey the elastic stress-strain law, but assumes a permanent set for all bent positions. The stresses and strains in the material can be estimated, approximately, if the complete stress-strain diagram for the tensile test is available.

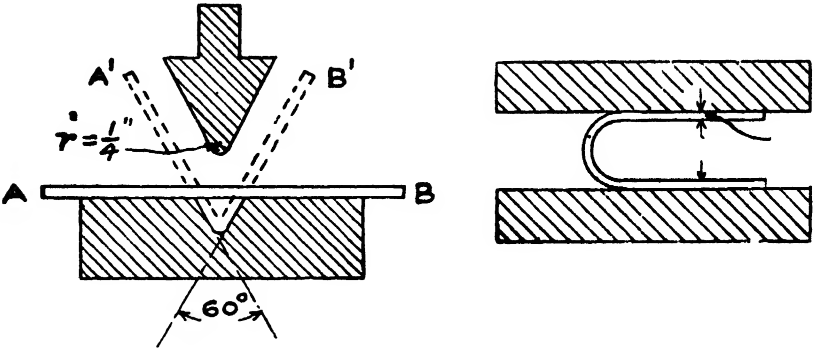

(A) (B)

FIG. 91

The distortion that occurs in the bent test piece is of a complex nature since the specimen is subject to three-dimensional stress, but since at the outer fibres the stress in the direction of the thickness is zero and at the middle of its width (for rectangular section specimens) there is no shear, the problem is simplified by disregarding all stresses and considering strains only. From these considerations it can readily be shown* that, utilizing the results of tensile test stress-strain relations, a bend specimen contracting freely can develop the full elongation e, determined by the following relation, before a crack is set up—

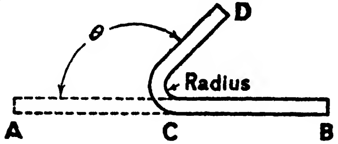

FIG. 92. A SPECIFIED BEND TEST THROUGH ANGLE θ

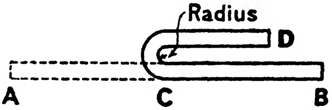

FIG. 93 BEND TEST THROUGH 180°

$$e = \frac{r}{1 - r}$$

where r = fractional reduction of area (from the tensile test).

It is thus possible to apportion bend test specimens so that this condition is fulfilled. The radius R (Fig. 90) of the bend former can also be determined for any width and thickness of ductile material so as to obtain the appropriate test conditions. In this connection the paper mentioned in the footnote reference contains a chart showing the relationship between the diameter of the former and width of a bend test specimen for any given severity of test.

Method of Making a Free Bend Test

The usual bend test consists in taking a straight test bar AB (Fig. 90) and subjecting it to a bending action so that it finally assumes the form shown at A_2B_2.

Various alternative methods of commencing such a bend test, based upon the centrally-loaded and (freely) end-supported beam principle, are illustrated in Fig. 91.† By this means the test piece is given an initial set of the order of 50° to 60°. It is then placed between the upper and lower jaws or faces of a testing machine or press and bent by lateral pressure until the bending angle (Fig. 91 (B)) is 90° around a former of specified radius. In some tests the metal is bent double without any former (Fig. 93). Thus, in the case of ***hot bend tests***

---

* "The Bend Test and its Value as a Guide to Ductility," L. W. Schuster, *Proc. Inst. Mech. Engrs.*, May, 1935.

† See also page 158.

on wrought iron and certain mild steels the test piece is bent double so that the two faces meet, as shown in Fig. 94; to pass this test the material on the outside of the bend must not show any signs of fracture.

A convenient method of bending sheet material or narrow rectangular bar test pieces through angles up to 90° is shown in Fig. 95. In this example the specimen is mounted with its lower end clamped in a vice, which also holds the mandrel member, and a long lever provided with a roller is moved in a clockwise direction so as to bend the specimen over a former on the mandrel member.

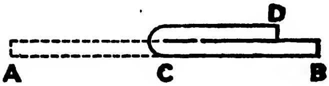

Fig. 94. 180° Bend Test

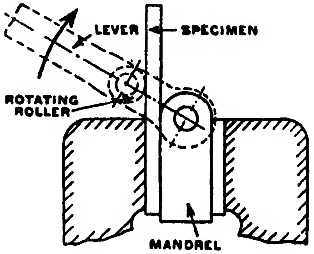

Fig. 95. Device for making Bend Test on Sheet Metal

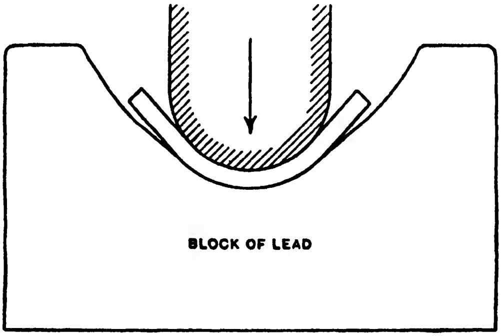

Fig. 96. Lead Block Bend Test

Another method sometimes employed, and illustrated in Fig. 96, consists in bending the specimen by pressing it into a soft metal, e.g. *lead, block with the aid of a former having a cylindrical-shaped end of specified radius.* This method overcomes the "peaking" of hard material bent with large formers and, although originally introduced for thin sheet metal tests, it has been employed satisfactorily for sheet and rectangular bar material up to $\frac{3}{8}$ in. thick. In this case the surrounding lead tends to cause close contact of the specimen with the former, thus forcing it to conform to the curvature of the latter, but the crown of the specimen is thereby strained laterally.

Test pieces can also be bent to circular form by applying a pure bending moment; this may be regarded as the ideal bend test system. A machine, designed for this purpose by Block and Ellenhaus, is based on the principle illustrated in Fig. 97. An advantage of this method of loading is that the curvature and the strain increase continuously with increases in the angle of bending, but for a given diameter of former a lower percentage elongation at the extrados is to be anticipated than by the usual testing methods. This method is to be recommended for *tests of welded joints* in plate and bar specimens, since it tends to enforce fracture at the weakest section, instead of at the place of maximum strain.

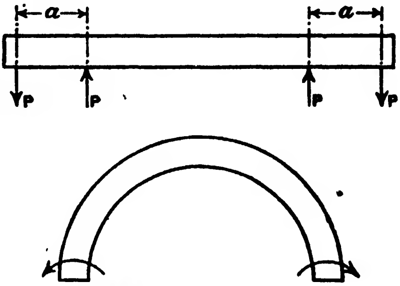

FIG. 97. METHOD OF APPLYING PURE BENDING TEST AND (BELOW) SHAPE OF BENT SPECIMEN

B.S.I. Tests

Bend tests are specified by the British Standards Institution for certain grades of steels and for wrought iron. These usually comprise *cold* and *hot bend tests* and a *nick bend test* on specimens prepared in accordance with the specification. As an example, the bend test requirements for Grade B wrought iron for general engineering purposes* may be cited as typical of the tests specified for such materials. For rounds and bars the test pieces must be cut lengthwise from bars, angles and other sections, with the skin surface on the outside of the bend. Rounds and squares up to $1\frac{1}{2}$ in. diameter or side and flats up to $1\frac{1}{2}$ sq. in. are tested in the "as rolled" condition; larger sizes are machined down lengthwise in the direction of, but not at right angles to, the piling, if any, to give a thickness measured from the skin surface to the machined surface of $1\frac{1}{2}$ in. Plate bend test pieces not less than $1\frac{1}{2}$ in. wide must be sheared or cut with and across the grain from each plate as rolled. In order to remove sharpness and roughness the corners of the test pieces may be draw-filed or ground to a radius not exceeding $\frac{1}{16}$ in. The test pieces should be bent by steadily applied pressure or by a succession of light blows without hammering direct on the bend.

The cold bend test for plates is such that the test piece shall, without showing signs of fracture on the outside of the bend, withstand

---

* B.S.S. No. 51—1939.

being bent cold round a former having a diameter of 1 in. through the following angles—

Thickness of Plate in Inches	$\frac{1}{4}$	$\frac{3}{8}$	$\frac{1}{2}$	$\frac{5}{8}$	$\frac{3}{4}$	$\frac{7}{8}$
With the grain .	80°	58°	42°	32°	25°	22°
Across the grain	35°	25°	17°	13°	10°	8°

For rounds, bars and other sections the test piece shall, without showing signs of fracture on the outside of the bend, withstand being bent cold through an angle of 180°, i.e. 90° per side (as at A_2B_2, Fig. 90), round a former having a diameter equal to 1½ times the diameter or thickness of the test piece, until the limbs of the test piece are parallel.

The hot bend tests on plates is such that the test piece from plates 1 in. thick, and under, shall when heated to a bright red heat of 1700° F. to 1800° F. (927° C. to 982° C.) withstand being bent round a former having a diameter of 1 in. through an angle of 125° with the grain and 100° across the grain without showing signs of fracture.

For material other than plates the test piece when heated to a bright red heat 1700° F. to 1800° F. (927° C. to 982° C.) shall, without showing signs of fracture on the outside of the bend, withstand being bent through 180° until the limbs of the test piece are in close contact.

The nick and bend test for the wrought iron is made on a test piece of the previously specified dimensions which is lightly and evenly nicked on one side, and the vee opened by bending the ends of the test piece back by steadily applied pressure or by a succession of light blows. The opened vee shall show fibre free from slag or dirt or coarse crystalline spots or streaks.

A quench test is also specified in some cases. Thus for the wrought iron material the test piece is heated to a yellow heat, 1900° to 2000° F. (1038° to 1093° C.), and suddenly quenched in water below 90° F. It must then withstand, without showing cracks or flaws, being bent through an angle of 180° round a former having a diameter equal to the diameter or thickness of the test piece, until the limbs are parallel.

The Ram's-horn Test

A test to indicate the forging, hot ductility or plastic qualities of iron and certain classes of steel is to heat the metal, in the form of a test piece *A* (Fig. 98), to a full red heat and to punch a hole of diameter equal to one-third the diameter or width of the bar at a distance from the end of the bar equal to one and a half times the width or diameter. While still hot the hole is drifted out to one and a quarter times the diameter or width of the bar as shown at *B* (Fig. 98). The end of the bar up to the hole is then split and the ends turned back without any extension of the original split or indications of fracture, cracks or flaws, as at *C* (Fig. 98).

The Bend Test for Welded Joints

The bend test is generally considered a valuable one for determining the quality of a welded joint in round or square bar and in flat sections of metal.

In the first place it enables the ductility of the weld metal to be tested in a manner that is not possible with the ordinary tensile test method. Further, it allows the joint to be tested for flexibility for the particular purpose of the welded component; the presence of hard metal at the junction is revealed by this test.

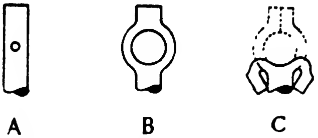

FIG. 98. THE RAM'S-HORN TEST

If the joint is unsound, the bend test will at once reveal this by cracking or actual fracture at the region of the joint.

The ductility of the weld metal and that in its vicinity can be determined by measurements of the elongations of sections between equidistant marks made on the surface before the bend test; in this connection comparative tests should be made of the elongations of bent specimens of the parent metal and the welded metal, in the vicinity of the bend.

Bend tests for welded rounds, squares and flats are included in the *British Standard Specifications for certain steels and irons*. Thus in the Specification for wrought iron for general engineering purposes* the following are the welded bar test requirements—

The welded test piece shall withstand being bent through an angle of 180° by pressure or with a succession of light blows over a bar having a diameter three times the thickness of the test piece and shall show no opening up at the scarf. Test pieces in full section shall be taken as follows—

For rounds and squares exceeding $1\frac{3}{4}$ sq. in. in area the test piece may, at the option of the manufacturer, be forged or rolled down to a cross-sectional area not exceeding $1\frac{3}{4}$ sq. in.

For flats exceeding 2 in. in width the test piece may, at the option of the manufacturer, be machined to a width of $1\frac{1}{2}$ in.

For flats exceeding $\frac{3}{4}$ in. in thickness the test piece may, at the option of the manufacturer, be machined to a cross-sectional area not exceeding $1\frac{3}{4}$ sq. in.

---

* B.S.S. No. 51—1939.

Rivet Tests

Rivets are made of materials possessing good plastic flow qualities with tensile stress values at least equal to those of the plates that are to be riveted.

The usual tests for rivets are the bend and flattening ones. For the bend test the rivet must be capable of being bent double on the shank portion without cracking. For the flattening test, the heads must be capable of being hammered flat to a thickness or diameter specified in terms of the shank diameter, without cracking.

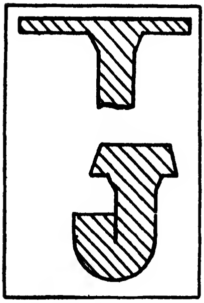

Fig. 99. Tests for Rivet Steel

The Admiralty requirements for steel rivets for ship construction are that they should be made from British acid open-hearth steel base having a tensile strength of not less than 26 or more than 30 tons per sq. in. with a minimum elongation of 25 per cent in a length of 8 diameters of the test piece. The rivets must also stand the following tests—

(1) Bending double when cold and hammered until the two parts of the shank touch, as shown in the lower diagram in Fig. 99, without fracture.

(2) Flattening of the rivet head, while hot, as shown in the upper diagram in Fig. 99, without cracking at the edges. The head must be flattened until its diameter is 2½ times the diameter of the shank.

(3) The shank of the rivet to be nicked on one side, and bent cold to show the quality of the material.

Tubing Tests

Mild steel tubing is usually required to conform to certain conditions when subjected to (1) *a crushing test*, (2) *a bulging test*, and (3) *a flattening test*.

For *the crushing test* the specimen to be tested should have a length equal to one and a half times the outside diameter, and when subjected to an end or axial compression load, such that its length is decreased by about one-third to one-half of its original value or until the outside diameter is increased in one zone by 25 per cent, should show no signs of splitting or cracking.

The bulging test (Fig. 100) which is sometimes, but not always, included in specifications, for cold-drawn weldless steel tubing requires that the tube shall withstand a 15 per cent increase in diameter for tubes of less than 11 S.W.G. thickness and not less than 12½ per cent for tubes of 11 to 18 S.W.G. without splitting or cracking.

The flattening test which is specified by the British Standards

Institution for automobile steels* for the low, medium carbon, high carbon and high carbon nickel steels is as follows—

(1) *For Low and Medium Carbon Steels.* Samples of the tubes to be flattened at the ends, or at any point where defective material is suspected, by not more than six blows until the sides are three times the thickness of the metal apart or two-thirds the original bore, whichever is the smaller, without showing signs of cracking.

(2) *For High Carbon and High Carbon Nickel Steels.* Samples of the tubes to be flattened at the ends, or at any point where defective material is suspected, by a few blows until the sides are eight times the thickness of the metal apart or two-thirds the original bore, whichever is the smaller, without signs of cracking.

The crushing test for the steels in (1) specifies that samples of the tubes are to be crushed endwise until the outside diameter is increased in one zone by 25 per cent or until one complete fold is formed, without showing signs of cracking. The length of the sample should be one and a half times the outside diameter of the tube.

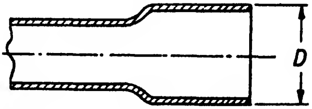

FIG. 100. BULGING TEST FOR MILD STEEL TUBING

The diameter D should be from $12\frac{1}{2}$ to 15 per cent greater than the original diameter, without splitting.

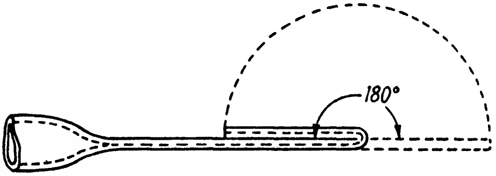

FIG. 101. TEST FOR COPPER TUBING

Copper tubes and certain grades of brass tubes are often required in specifications to withstand a bulging test giving a certain increase in diameter—usually about 25 per cent—without cracking or showing flaws. Another test, sometimes specified, requires that the end of the tube shall be flattened so that the metal sides touch and the flattened portion bent or doubled over through 180° (Fig. 101). For certain purposes *a drifting* or *"bell-mouthing" test* is specified; in other instances a *flanging test* is required.

Typical Bend Test Results

Fig. 102 shows some photographic reproductions of cold-bending tests upon nickel-chrome steel† having an elastic limit of 40 tons per

---

* B.S.S. No. 5009—1924.

† Made by Messrs. Vickers, Ltd.

sq. in., and a breaking strength of 50 tons per sq. in., with a 20 per cent elongation on 2 in. and a 50 per cent reduction of area.

The left-hand specimen was a 1 in. square bar, and the centre one a 1½ in. round bar, having originally a deep notch upon the tension side. The specimens were bent under a hydraulic press.

Fig. 103 is a photographic reproduction* of bend tests upon a case-hardened nickel steel of two grades of hardness—*A* and *B*—and a case-hardened mild steel *C*.

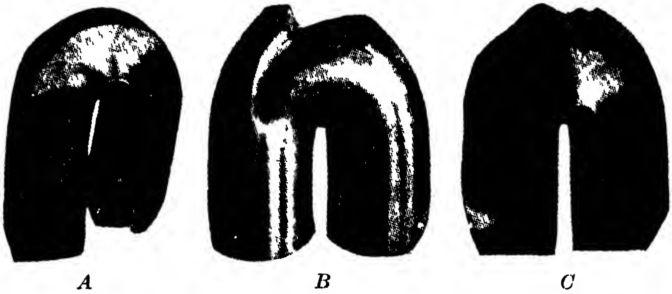

FIG. 102. COLD BEND TESTS UPON NICKEL-CHROME STEEL

The steel in *A* was case-hardened in the ordinary way, but was quenched in cold water. It was stated that the skin was so hard that it readily scratched glass. The core had an elastic limit of 65 tons per sq. in., and an ultimate strength of 80 tons per sq. in. Its smaller degree of elongation is apparent by the relatively smaller bending angle before fracture.

The same steel is shown in *B*, but quenched in boiling water. The skin was stated to be hard enough just to scratch glass, and to be too hard to file. The ultimate strength of the core was given as 37 tons per sq. in.

The mild steel bar shown in *C* was ⅞ in. in diameter, and had a glass hard skin. Tensile test results of the material of the core gave an elastic limit of 22 to 25 tons per sq. in., and an ultimate strength of 35 to 40 tons per sq. in., with an elongation varying from 33 to 30 per cent, and a reduction of area of from 70 to 60 per cent. The fracture was fibrous, and was coarser than that of the steel in the preceding examples.

Wire Testing

It is usual to specify certain test requirements in the case of hard drawn wire, depending to some extent on the purpose for which it is

---

* On Messrs. Vickers, Ltd., steels.

to be used. The usual mechanical tests specified include (*a*) a tensile test, (*b*) a twisting test, and (*c*) a wrapping test.

(*a*) The **tensile test** is carried out in a special type of tensile testing machine, provided with special shackles for holding the test specimen, automatic loading and a stress and strain measuring, or recording, device.

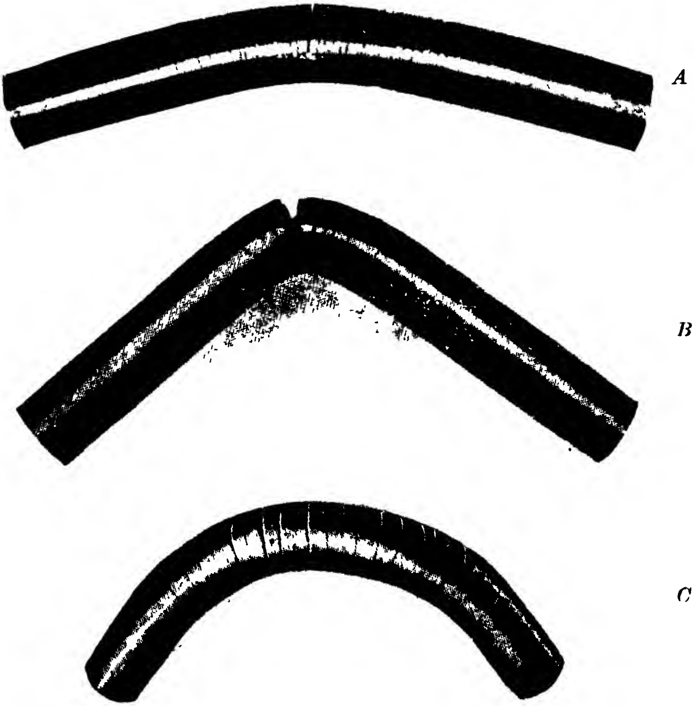

FIG. 103. RESULTS OF BENDING TESTS UPON CASE-HARDENED MILD AND NICKEL STEELS

In many cases the *modulus of elasticity* in tension is required. This is obtained by means of an extensometer, preferably of the mirror type, measurements of the strains being noted, for different loads, within the elastic limit.

In making such tests it is important to employ straight lengths of wire, for the effect of small kinds or bends is to give too low a value of the tensile strength and of the elasticity modulus. The manner in which the elasticity modulus is calculated is explained on page 50.

The elongation is usually measured on a 10 in. length, unless otherwise specified. The value of the elongation in the case of hard-drawn copper wire as used for electrical purposes, varies from 2 to 4 per cent; for the ordinary soft copper wires it is about 30 to 40 per cent.

(*b*) The **twisting test** is generally specified by the Post Office, but on the Continent it is usual to substitute a bending test whereby the wire is clamped to one end and then bent backwards and forwards through an angle of 180° until it breaks. The previous practice in America was to omit any twist or wrapping tests and to rely upon the tensile test results.

The method of carrying out the twisting test is to grip each end of a given length of wire in a vice, one end of which is fixed and the other capable of rotation about the axis of the wire. A suitable type of machine for carrying out this test is shown in Fig. 350.

The rate of revolution of the vice should not exceed one turn per sec. The total number of twists of the wire before the specimen breaks is usually indicated on a counter, or may be ascertained from a line made with ink or crayon on the surface before the test; this forms a spiral, the number of turns of which can be counted after fracture.

The test length of the specimen is often specified at 100 times its diameter; in other cases it varies from 3 in. to 6 in. according to the gauge and material of the wire.

(*c*) The **wrapping test** consists in fixing a portion of the wire in a vice, leaving a suitable free length of the wire for the test. This is wrapped around the parallel part of the wire near the vice, until six complete turns have been made. It is then unwrapped and finally again wrapped in six turns about the parallel portion of the wire. In the case of hard-drawn copper wire, the material must withstand such a test without fracturing.

The Torsion Test

It is a matter of some surprise that the torsion-test method is not more widely adopted, in view of the fact that a large number of materials are employed for rotating parts and parts subjected to shear; several of the large automobile steel manufacturers are beginning to recognize the value of the torsion test, and are specifying such a test.

In torsion tests the strength of the material under shearing action is that chiefly concerned, and it may be regarded as a ready means for observing the shear strength and modulus of rigidity of the material.

When a circular rod of a plastic material is subjected to a torque of comparatively small amount, the shear strain at any part is proportional to the torque or to the shear stress, and it is a maximum at the periphery and zero at the centre. Within the elastic limits in shear, the stress is almost directly proportional to the strain, but beyond the elastic limit the specimen will take a permanent set, or twist, when the torque is removed (which may, however, be removed by annealing).

When the torque is continued, in the case of a plastic material it is found that when the maximum shear stress is reached on the surface, which would cause breaking, the specimen does not suddenly shear, but that fracture only occurs when the maximum shear stress becomes practically uniform over the whole section; it does not, of course, increase any more at the surface.

The value of the shear stress calculated from the breaking torque value is always higher than the ordinary value as found by more direct tests; this, as in the case of stresses calculated for beams at their breaking-load values, is due to the non-application of the formulae based upon the ordinary assumption of stress and strain proportionality.

FIG. 104. SHOWING EFFECT OF TORSION TEST ON A CASE-HARDENED NICKEL STEEL SPECIMEN

Torsion Test Results. When a cylindrical specimen is gripped in the torsion testing machine at the one end and twisted at the other, it is found that an initially straight longitudinal line upon the surface becomes helical as the torque is increased, and the specimen shortens progressively in length and increases in cross-section. For plastic materials such as iron and steel, in the shape of cylindrical rods of length equal to about eight diameters, the specimen will require between $5\frac{1}{2}$ and 8 complete revolutions before fracturing. For high-carbon and alloy steels the number of twists varies from $1\frac{1}{2}$ to 4.

In such tests the peripheral ring first takes a permanent set. Thereafter, the stress in this ring does not increase with increasing torque, but the permanent set effect spreads towards the centre until the shearing stress is more or less uniform over the cross-section.

For *cast iron* the torque T_m which will break a circular bar can be calculated from the following empirical relation—

$$T_m = 0{\cdot}196\, q_m \,.\, d^3,$$

where q_m = the equivalent shearing stress, d = diameter or coefficient of torsional stress.

The value of this coefficient varies from about 13 tons per sq. in. in the case of the softest grey iron, up to about 24 tons per sq. in. for the hardest white iron, being about 18 for medium grades.

The following tables show some torsion tests to destruction results for iron and steels. Table 25 refers to some of the results of Platt and Hayward's experiments.*

---

* *Proc. Inst. Civil Engineers*, vol. xc, p. 382.

TABLE 25

TORSIONAL AND SHEAR STRENGTH OF STEEL AND IRON

Material	Elastic Limit in Tons per sq. in.	Coefficient of Torsional Stress at Fracture in Tons per sq. in.	No. of Revolutions in 9-in. Length to Fracture	Modulus of Rigidity in Tons per sq. in.	Ultimate Tensile Strength in Tons per sq. in.	Ultimate Shearing Strength from Shearing Tests, in Tons per sq. in.
Wrought iron, crown best	8·99	25·2	8·90	5714	21·60	18·76
Bessemer steel	20·28	44·62	3·84	5750	52·20	35·21
Crucible steel	19·36	42·30	4·36	6098	52·16	33·30
Rivet steel	10·20	29·85	7·85	5834	28·40	23·00
Steel from casting	10·40	34·70	4·15	5882	38·04	27·60
Siemens-Martin steel	10·16	28·13	9·92	5981	25·75	20·94

TABLE 26

RESULTS OF TORSIONAL TESTS UPON ALLOY STEELS (Messrs. Vickers, Ltd.)

Material	Tensile Test				Torsion Test			
	Elastic Limit Tons per sq. in.	Ultimate Strength Tons per sq. in.	Elongation per cent	Reduction of Area per cent	Calculated Shearing Stress Tons per sq. in.		Final Twist	
					Elastic Limit	Maximum	Angle	Revolutions
Carbon steel (axle)	24·8	39·6	30·0	63·6	17·2	39·2	1405°	3·90
Nickel steel	33·2	44·4	25·0	65·8	23·2	40·5	1474°	4·09
Nickel-chrome steel	45·6	58·0	19·5	63·6	33·5	49·2	1252°	4·48

Note. The torsion specimens measured 8 in. long by 1 in. diameter.

Further reference to the subject of torsion testing machines is made in Chapter XIII.

CHAPTER VI

TESTS FOR THIN SHEET METALS AND STRIP

SHEET and strip metals are now widely employed, commercially, for mass-produced parts made by operations of bending, folding, drawing, shallow and deep pressing. Sheet metal spinnings, obtained by deformation of the metal whilst it is held and rotated in the lathe, are another commercial product of importance.

In most of these operations the thinner sheet metals are concerned and it is therefore essential to understand the behaviour of such materials under conditions analogous to those employed in the manufacturing processes, so that a suitable test procedure can be specified.

The type of test to be used on thin sheet metal, i.e. thinner than about 10 S.W.G. (0·128 in.), will depend, largely, upon how the metal is to be fabricated to the finished product, and since there is an exceedingly wide variety of shapes and sizes of sheet metal parts employed in industry it will be evident that no hard and fast rule can be laid down that will be universally applicable.

Since, however, most bending, pressing and other deformation processes involve the stretching of sheet metals under tensile loading conditions, it follows that a knowledge of the tensile test properties of the sheet material is a first essential. It must, however, be remembered that in drawing and pressing operations, the metal is stretched unevenly and is also subjected to bending action, involving compressive strains, so that the simple tensile test is not in itself sufficient for assessing the drawing and pressing qualities. Further, in simple sheet metal bending and seaming operations, the metal in the vicinity of the bend or fold is stressed beyond the elastic limit and, usually also, the yield point so that tensile data are required over the complete test-to-destruction range.

Tensile Tests

As a result of a thorough investigation into the subject of testing thin sheet metals and an examination of various alternative methods of testing, shapes of test pieces and other relevant factors, the British Standards Institution has been able to standardize* the values required in tensile tests and the form of test piece to be employed in such tests.

The dimensions of the standard test piece are such that it has a parallel length of 2½ in. and gauge length of 2 in. The dimensions of the ends which are held in the testing machine grips are not specified, since these will depend upon the type of grip used.

---

* B.S.S. Tests on Thin Metal and Strip, No. 485--1934.

For certain purposes, e.g. for deep pressing applications, it is necessary to know the behaviour of longer test pieces, since the results for a gauge-length to width ratio of 4 : 1 are not accurately applicable. The test piece selected for this purpose has a ratio of $10\frac{2}{3}$: 1.

The tensile tests specified for thin sheet and strip material of 10 S.W.G., and smaller thicknesses involve the determination of the limit of proportionality and yield stress, ultimate tensile stress, percentage elongation on the standard gauge length and the elastic modulus. For materials having no definite elastic limit and yield point the proof stress is specified at some definite percentage of the original gauge length.

The value of the elastic (Young's) modulus is deduced from the slope of the flat portion of the stress-strain curve OA (Fig. 37, page 61).

Special stress is laid on the *importance of machining accuracy* when preparing test pieces, and when only a few of the latter are required the following procedure should be adopted—

A rectangular piece, 8 in. long by $1\frac{1}{2}$ in. wide, is cut from the sheet and is drilled with one central hole at each end. Push-fitting pins are placed in these holes and the piece is clamped between plates (roughly the shape of the finished specimen) in the vice of a milling machine. One pin of the specimen bears against a suitable stop fitted to the vice or table of the machine, and the two pins fitted in the test piece project through the clamping plates and rest on the top faces of the jaws of the vice. One side of the test piece is then milled to the standard shape, note being taken of the index readings of the milling machine traverse. The test piece is then inverted, care being taken that the same pin again bears against the stop, and the milling operation is repeated, the traverse being moved between the same index marks. Horizontal location of the test piece by the use of the stop and the traverse index marks ensures symmetry of the acting length and the shouldering. Vertical location of the test piece by means of the pins ensures alignment of the centre of the acting length with the two central holes. Other holes where necessary are drilled, using a drilling jig.

In regard to *the determination of strains*, the extensometer employed should be capable of measuring extensions correct to 0·005 per cent of the gauge length, and should possess a sensitivity of 1/20,000 in.

Special care is necessary to ensure that the test piece is loaded uniformly across its cross-section, i.e. the centre line of pull should coincide with the longitudinal axis of symmetry of the test piece.

The two forms of mounting, employing a pin-jointed and ball-aligning shackle, respectively, shown in Figs. 105 and 106 are those recommended by the British Standards Institution.

The use of wedge-grips for thin sheet metal test pieces is not recommended, as these are liable to introduce axial loading alignment errors.

Whilst it is not possible to specify any definite rate of loading it is advisable in stating test results to include a note on the rate at which the loads were applied.

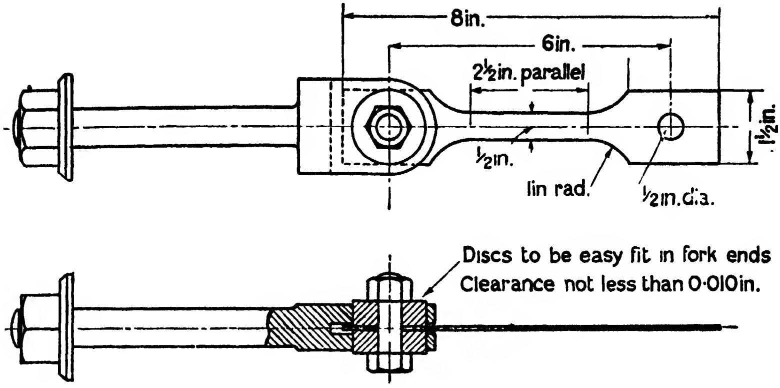

Fig. 105. Type of Pin-pointed Shackle recommended by the British Standards Institution for Thin Sheet Metals

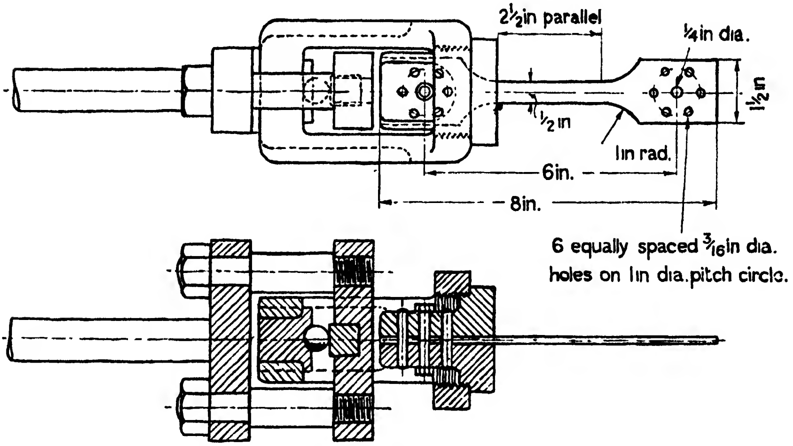

Fig. 106. Alternative Ball-aligning Shackle for Thin Sheet Metal Tests

Condition of Metal for Tensile Tests

In connection with tensile test specifications for thin sheet metals it is important to state the condition of the metal, i.e. whether annealed, normalized, "as drawn or rolled," age-hardened or otherwise heat-treated. In the case of heat-treated specimens the precise temperatures and periods of exposure to these should be specified. Another important requirement is that of the direction of the grain or rolling direction, since the tensile strengths of most sheet metals are appreciably higher in the direction of rolling than transversely, or "across the grain."

Bend Tests

A practical method of testing the ductility of a piece of sheet metal is to clamp one end in a vice and to bend the free end over, by hammering, noting whether cracks develop on the outer or tensile stretch side of the bend. Another method is to clamp the metal in a suitable manner and to hammer or press the free end back towards the clamped side until the metal fractures or an angle of 180°, corresponding to the metal being bent almost double, is reached. When fracture occurs during this test the angle of the free end to its original plane is taken as a measure of its bending quality. An improvement on this method is to bend the test piece over a former of a given radius, the latter being expressed in terms of the thickness of the test piece.

A bend test formerly used for automobile sheet steels is illustrated in Figs. 91(A) and 91(B), on page 142. The test includes two distinct operations, both of which necessitate the use of a press. In the absence of the latter a hammer may be employed, but this method is open to the objection that the material is subjected to impact effects rather than to pure bending. Referring to Fig. 91(A), the test piece is placed in position on a steel block having a 60° vee-groove. The knife edge, or wedge, which has a similar angle and is rounded to a radius of $\frac{1}{4}$ in., is then pressed down on to the specimen until it assumes the shape shown dotted at A^1B^1. After this the bent specimen is removed from the vee-block and is further bent as shown in Fig. 91(B), either with or without a spacer. To pass this test the specimen must withstand the second bending operation without breaking or showing signs of cracks, hair lines, or other defects.

Other types of bend test that have been used or are still in use include the *hot bend test* with the steel specimen at 750° to 1000° C. and the *nicked bend test*, in which the specimen is nicked all round with a 60° vee notch having a depth of about 12 per cent of the thickness (or, for round specimens to which the same test may be applied, of 8–16 per cent of the diameter). The specimen is then bent over to the angle of fracture, and the structure of the fractured ends is examined to ascertain whether it is crystalline or fibrous. The hot bend test is used chiefly to ascertain whether the material suffers from red shortness or high sulphur content.

In general the bend test may be regarded as useful in the case of sheet metal that is to be employed in the fabrication of sheet metal objects by bending or seaming processes.

The angle deformation or bend test gives different results according to whether the angle is a sharp or radiused one, and, in general, the material is weakest for sharp (or small radius bends) and strongest for bends of large radii. It is therefore desirable to specify the radius of the former around which the material is to be bent. This radius is usually in linear relation to the thickness and varies according to the ductility of the metal.

The British Standards Institution* has pointed out the desirability of employing the simplest possible form of bend test for thin sheet metals, and has laid down certain recommendations for both *single* and *reversed* bend tests. Although many different designs of bend-testing machines exist most of these require special tools, but in the B.S.I. specified method of testing sheet materials any of these machines can readily be converted.

The specimens used for these tests are cut in the specified direction relative to the direction of rolling and are ½ in. wide or, if supplied in smaller widths as in the case of strip material, the full width of the strip. The sides of the test piece should be carefully rounded so that the longer edges are semi-circular instead of rectangular.

There are three single bend tests specified, namely, (1) *the close bend*, (2) *the angle bend*, and (3) *the* 180° *bend.*

The close bend test (Fig. 94) consists in bending the end A of the test piece AB, by steady pressure or blows, over until the final shape is as indicated at BCD. To pass this test the material should show no cracks on the convex side at C.

The angle bend test (Fig. 92) consists in bending the end A, by means of steady pressure, over a former of specified radius until AC has moved through a specified angle θ to the position indicated at D. The material should show no signs of cracks around C to pass this test.

The 180° *bend test* (Fig. 93) consists in bending the end A over a former of given radius through 180° till the two parts of the test piece are parallel. The material should show no signs of crack on the convex surface, in order to pass this test.

In the two latter tests it is important to ensure that the material of the test piece remains in contact with the former all the time. The effect of any "spring" in the metal at the conclusion of these bend tests can be ignored.

In the case of the *reverse bend tests* there are two alternative methods specified, namely, (1) *the* 90° *reverse bend* and (2) *the* 180° *reverse bend.* Referring to Fig. 107 (A) showing the 90° reverse bend test, one end of the test piece AB is clamped in a suitable device, the jaws of which

---

* B.S.S. No. 485—1934.

are given a suitable radius, as shown. The test piece is bent through an angle of 90° until the portion *AC* assumes the position *CD*. The next operation is to reverse the direction of bending until the portion *CD* reverts to its original position along *CA*. The process is continued, counting the number of reversals until the specimen breaks or completes the specified number. The counting of the number of reversals is such that it starts at the first reversal of bend. That is to say, when the portion *CD*, first bent, assumes the position *CA*, this is counted as one reversal; when it is bent 90° to its former position *CD*, this indicates two reversals, and thence every subsequent 90° bend counts as an additional reversal.

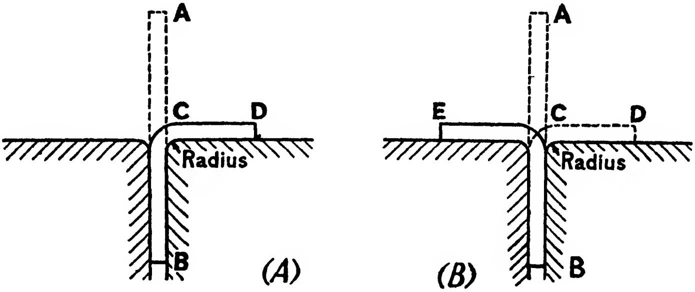

FIG. 107. REVERSE BEND TESTS

In the case of the 180° bend test (Fig. 107 (*B*)) a similar method is employed, with the specimen bent from its position *A* first to *D* and then through 180° to *E*, counting the number of reversals through 180° commencing with the position *E* as the first reversal, through 180° to *D* as the second reversal, and so on. It will be seen that in this test the initial bending through 90° is ignored in counting the number of reversals.

The data obtained from bending tests of the types defined may be regarded as supplementing those obtained from the tensile test, mentioned earlier, in regard to the ductility, forming properties and rate of strain hardening of the material.

Sheet Metal for Pressings—Desirable Qualities

When sheet metal is employed for plain or deep pressings, drawn parts or spinnings, additional information becomes desirable concerning the behaviour of the material under similar conditions of stressing. In this connection the stresses involved include tension and compression varying both in direction and degree, according to the nature of the operation and final shape of the article.

In general, for satisfactory results in pressing operations the material should have a high percentage elongation in all directions, namely, both along and across the direction of rolling, such elongation being measured on the standard 8 in. test piece. It is, however, desirable for the most satisfactory results that the percentage elongations on the 2 in. and 8 in. gauge lengths should not be appreciably different; otherwise local stretching and failure may occur.

Another desirable characteristic is that the ratio of the yield stress or 0·1 per cent proof stress to the tensile strength should be as low as possible, i.e. the plastic portion of the stress-strain curve, which is the working range involved in pressing operations, should be the greater proportion. The actual shape of the stress-strain curve is also important as it indicates the *rate of work-hardening.* In this respect the type of curve which tends to fall away fairly rapidly from the straight line elastic portion for small increase of stress gives a slower rate of work-hardening, and indicates the more suitable material for pressing and drawing operations.

In deep drawing processes, the compression of the material is one of the principal factors involved, and it is essential that the material under compression between the punch and die members should work-harden as slowly as possible as it is being compressed in flowing towards and over the radius of the die. At the same time the tensile stresses should not become excessive as would be the case with materials which work-harden more rapidly. It is for this reason that annealed plain aluminium sheet is much more suitable for deep pressings and drawings than the annealed harder aluminium alloy sheets.

Another desirable quality for sheet metal employed for pressings is that of fine crystalline structure, irrespective of its actual ductility, since coarse structure material tends to fail by splitting due to its movement relative to the punch and die surfaces.

From this brief outline of the subject it will be evident that *for cold pressing* purposes it is *the plastic rather than the elastic condition of the material* which is of greater importance. There are, however, many other factors involved, such as the *form of the pressing* which may be satisfactory for one shape but may fail in the production of another form, in the same material.

Yield Point Effect

Again, the occurrence or absence of a well-defined yield point has a bearing upon the pressing qualities of a metal. Thus, a clearly-defined yield point is now believed* to be directly responsible for the production of ***stretcher strains*** in a pressing where the amount of imposed plastic strain varies from place to place. Another characteristic of

---

* "Cold Pressing and Drawing," H. J. Gough, C. H. Desch, and G. Sachs, *Proc. Inst. Autom. Engrs.*, 1935.

metals, to which previous reference has been made and which assumes much importance in press-work, is that of *strain hardening*, following plastic deformation, which is difficult to assess in mechanical tests owing to the time element involved in this recovery, wholly or partially, of elasticity.

The Cupping Test

Whilst the results of tensile and hardness tests on thin sheet metal test pieces afford a certain guidance as to the suitability, or otherwise, of a metal for pressings it is usually considered that some type of test simulating the actual pressing operation should be applied to the sheet material.

The principle of this "cupping" test is that of using an indenting press tool of curved form which is pressed into a sheet of the material, held suitably in a die or dies in such a way that it can flow sideways and inwards as the press tool is applied. Thus, a cup or depression is formed in the metal, the deformation being continuously increased until failure occurs owing to the cracking of the sheet. The depth of the cup when failure occurs is usually taken as a measure of the workability or pressing quality of the metal.

The Erichsen Cupping Test Machine

Various designs of cupping machines are or have been employed; these include the Erichsen, Olsen, Guillery, Amsler and Avery machines. The dimensions of the plungers or punches differ in these machines, but in each case the plunger has a hemispherical end for indenting the test metal.

The Erichsen pattern* is illustrated in Fig. 108. This consists of a solid metal frame carrying on its left a fitting to take the cupping die and on the right a round-nosed ram which can be moved axially by means of a square-threaded screw, which works within another square-threaded screw used for holding the test piece against the die member. The thickness of the test piece can be measured by means of a scale on the wheel member, the latter being rotated until the test piece is clamped firmly between the end of the larger screw and the die member. After reading off the thickness, the handle is turned back by about five divisions on the scale in order to allow the test piece a certain amount of freedom. The larger screw is clamped securely in this position. The indenting tool then touches the test piece and the micrometer scale is set to zero. The object in this case is to enable the depth of the indentation to be measured. The indenting tool is now screwed forward into the test piece, by means of the large hand wheel provided, and the progress of the cupping or bulging is observed by means of

* G. H. Alexander, Ltd., Birmingham.

a mirror provided on the left-hand side of the machine. The convex side of the material is carefully observed until the moment of fracture occurs. The depth of the impression is then read off the micrometer scale. When approaching the point of fracture the handle should be turned very slowly so that an accurate reading can be obtained. Usually, the test piece, which measures about 89 mm. by 89 mm., is smeared lightly with grease before it is inserted in position; the screw threads are also greased in order to reduce the physical effort needed in making tests.

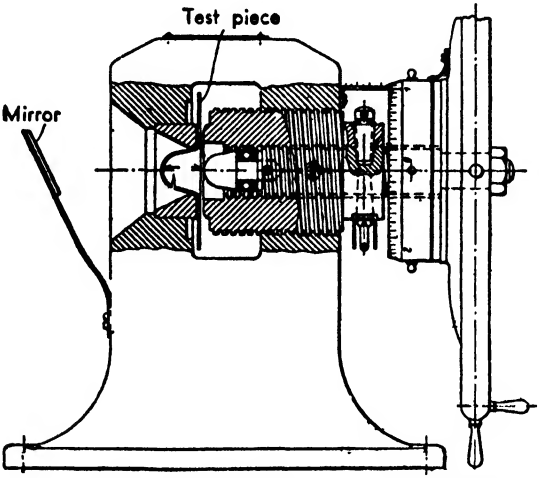

FIG. 108. THE ERICHSEN CUPPING TEST MACHINE

The moment of fracture is considered to have been reached when it is possible for light to pass through a crack in the dome. This moment is apparent also by a sudden reduction in the pressure on the hand wheel, the jerk often being audible; with practice, tests can be made to an accuracy of $\frac{1}{100}$ mm. in the micrometer depth reading.

The standard thickness of commercial steel and non-ferrous metal sheets used in this test is 0·4 mm. or $\frac{1}{64}$ in., and there are, beside the standard indenting tool, a number of other special tools for the purpose of testing strip metals of 19 to 26 mm., 10 to 19 mm. and up to 10 mm. width as well as for cartridge cups, coin blanks, and wire.

As a practical method of testing material for commercial purposes the machine enables comparative results regarding the workability or pressing quality of the material to be obtained, whilst an *examination of the fracture* will give an indication of the nature of the metal. Thus, if the fracture runs round the dome with a medium or fine granular structure the material is considered of good quality. A small depth of draw with a fracture running in the direction of rolling of the sheet is an indication of poor drawing qualities, i.e. fibrous metal. This fibrous formation is often found in first quality sheet iron and tinned iron, but is generally absent in annealed carbon steels. Non-ferrous sheets (annealed), with the exception of zinc, do not usually reveal a fibrous structure.

The exterior surface (macro-structure) of the dome should be examined to ascertain whether it is rough or retains a surface similar to that of the original sheet. In the former case it is an indication that the metal will offer increased resistance to the press tools, and is therefore not very suitable for drawing and pressing operations. This structure in this instance is often caused by *excessive annealing.*

The dome frequently appears close-grained near the surface; this is typical of copper and brass sheets, and is considered an undesirable quality and an indication of unsuitable metal.

Some typical depth of fracture or normal standard values for various good commercial qualities of sheet metal of 0·4 mm. thickness are given in Table 27.

TABLE 27

ERICHSEN CUPPING TEST VALUES

Material	Depth of Fracture	
	mm	in.
FERROUS SHEETS		
S.M. hoop iron, polished	9·5	0·374
S.M. sheet first class	8·2	0·323
S.M. stamping sheet pickled	8·0	0·315
Common folding sheet	7·5	0·295
Charcoal tinned sheet	7·5	0·295
2nd quality tinned sheet	6·7	0·264
Brass or copper-plated sheets	8·5	0·335
NON-FERROUS SHEETS		
Brass stamping sheet	13·5	0·532
Yellow metal	11·7	0·461
Pure nickel	11·5	0·453
Nickel silver stamping sheet	11·5	0·453
A1 Nickel silver sheet	11·0	0·433
Copper sheet	10·5	0·413
Aluminium sheet	8·7	0·343
Zinc sheet	6·5	0·256
Silver sheet 875/1000	7·5	0·295

Typical Cupping Test Machines

The Olsen ductility machines used in the U.S.A. are designed in several sizes and models to handle sheet metal from the thinnest gauges up to $\frac{3}{8}$ in. thick and for hand or electric motor operation.

They are arranged to provide complete test data including (1) the thickness of specimen, (2) depth of cup and corresponding load at any time during the test, and (3) depth of cup at fracture with corresponding maximum load.

The method used for comparative tests on sheet metal of the same thickness is first to cup the material to a definite depth (usually ¼ in.) well within the fracture limit, noting the load required to produce this cup. Pressure is then increased until the material fractures and the depth of cup measured. On squared paper a point is then plotted for the specimen, using as ordinate the load required to produce the ¼ in. cup and as abscissa the depth, in inches, of the cup at fracture. Points representing other specimens are then plotted in a similar manner. By drawing two straight lines across the chart the points representing tests of various specimens will be divided into three groups separating deep drawing, medium drawing, and shallow drawing stock.

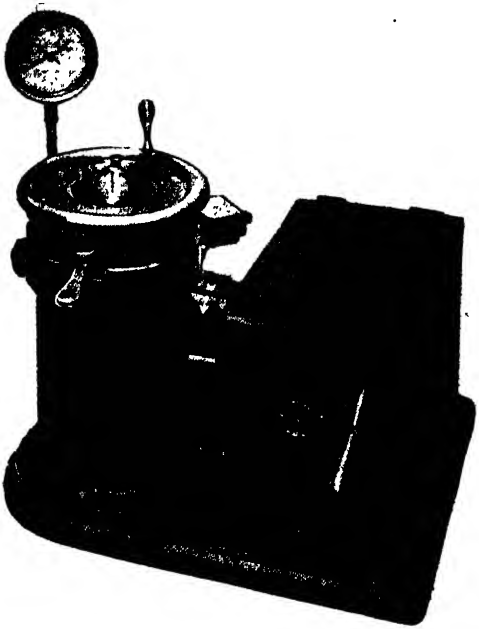

FIG. 109. OLSEN CUPPING TEST MACHINE

When stock of different thicknesses is to be classified the depth of the cup at fracture is plotted against the load required to produce the ¼ in. cup, divided by the material thickness in thousandths of an inch.

Fig. 109 illustrates the No. 20 model Olsen machine which has a capacity of 12,000 lb. and will test sheet metal up to $\frac{1}{16}$ in. thick. It applies the load to the cupping tool hydraulically, the pump being electric motor-driven. The load is weighed, hydraulically, from the hydraulic cylinder on a dial indicator. As material is inserted and clamped in place the thickness of the specimen is shown by a graduated scale under the hand wheel. Clearance of the test specimen in the clamp can also be regulated by noting this graduated scale. At all times during the test, the depth of cup and load applied are indicated.

Fig. 110. Olsen Automatic Cupping Test Machine

A stop is provided so that increase in load is automatically arrested for any desired depth of cup. Readings are taken, then the load continues so that it gradually and smoothly increases up to the fracture of the specimen, at which time both the depth of cup and the amount of load are shown.

The depth of cup for the initial load may be adjusted to any amount desired. For example: Using $\frac{1}{16}$ in. thick specimen the machine can be set for $\frac{1}{4}$ in. depth of cup by a device on the front of the machine just under the hand wheel. When the cupping tool has produced $\frac{1}{4}$ in. depth of cup in the specimen, increase in load is automatically stopped and may be read on the large dial on the front of the machine. By simply moving the handle on the front of the machine under the hand wheel, the increasing load is again released and will continue up to the fracture point of the specimen. As soon as the pointer on the front of the dial stops its forward motion and starts backward, it is evident that fracture has occurred and the maximum pounds indicated by the pointer may be noted. The load should be released immediately. The small dial within the hand wheel indicates the depth of cup under all loads, and after fracture remains in its maximum position until the specimen is removed.

The motor and pump are started and stopped by the switch on top of the cylinder housing. Pressure is applied, released or otherwise controlled by a lever at the front of the pump housing.

The machine can be provided with a special autographic attachment for obtaining records showing the loads and corresponding depths of cups. The automatic ductility machine, by the same manufacturers, shown in Fig. 110, enables quick testing to be effected for production routine purposes. The sample under test is clamped automatically between the die and follower plate before the test proceeds. This eliminates the use of the former hand wheel necessary to clamp the specimen. As the test load proceeds, the clamping load remains at a fixed value during the testing. Combined with the uniform speed control of the cupping tool this gives greater uniformity of test results.

The machine is made compact and rugged with all the working parts completely enclosed. A direct connected motor-driven, rotary-gear pump supplies the pressure to the loading system, and the clamping head.

The dial indicator is mounted on the clamping head for noting the depth of cup. It is possible to determine the correct value of the depth of cup only, by this method of mounting. The clamping head moves downward, and does not require the operator to balance the specimen before contact is made with the die. The control lever on the right gives automatic sequence of clamping the specimen and applying the load to the sheet metal. The small knob on the left is used to give the desired testing speed. Its setting may be retained when the control lever is thrown for quickly reversing the piston for the next test.

A knurled control stop is provided for manually setting the machine to stop at any desired depth of cup. This is generally used when the load at ¼ in. depth is desired. After the load reading is determined, the test can be continued to the rupture point by a slight turn of the knurled stop.

At the completion of the test, the control handle is shifted to the starting position, when the specimen can be removed from the die. The next specimen can be inserted and tested in the same manner.

Some Typical Test Results

The depth of the impression at fracture will, of course, depend upon the thickness of the sheet metal for a given size of test piece and the same dimensions of indenting tool. The manner in which the depth of impression increases with the sheet thickness for various commercial or trade qualities of (soft) sheet metals is illustrated by the graphs shown in Fig. 111*

* G. H. Alexander, Ltd., Birmingham.

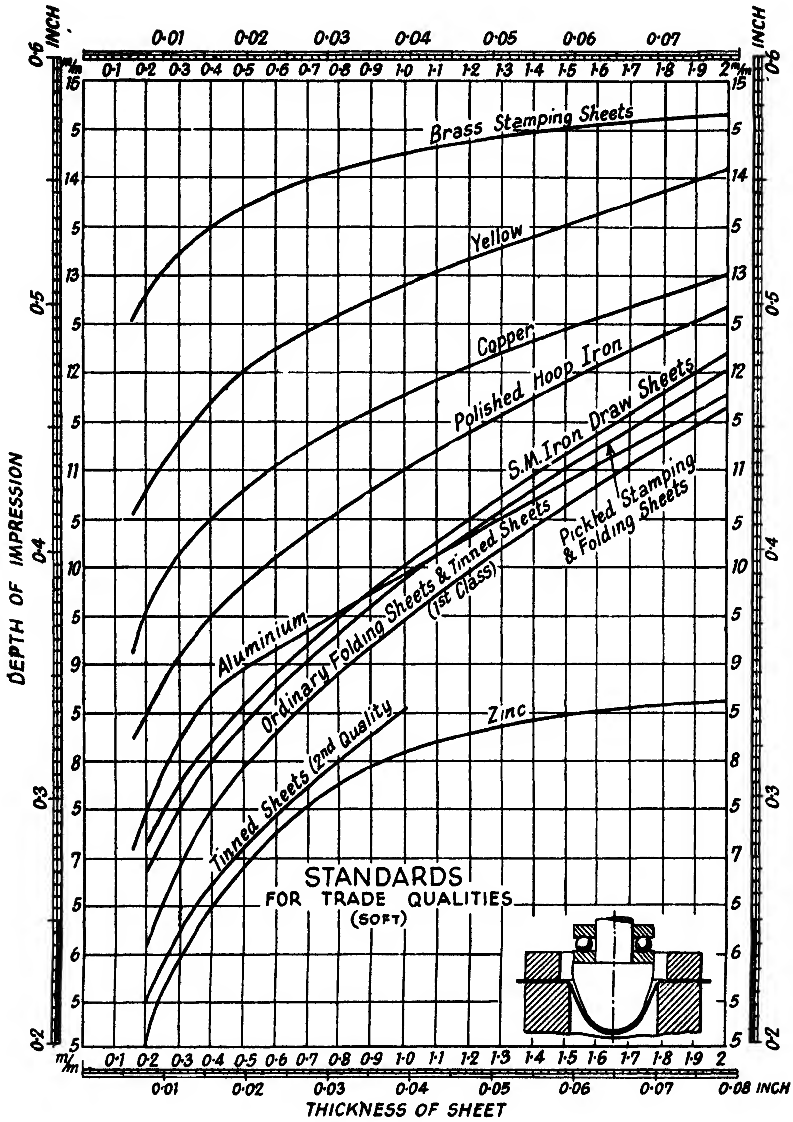

Fig. 111. Typical Results obtained from Cupping Tests on Various Sheet Metals

The dimensions of the indenting tool, the test piece and the die aperture vary in the different cupping test machines so that comparative results are not easy to obtain. Fig. 112 shows the principal dimensions* of the various machines used for cupping tests. In the Guillery and Olsen machines the load at which failure occurs can be observed in addition to the depth of cup.

Machines of these types, whilst affording a relatively simple means of checking the drawing properties of sheet metals and possessing the advantage of being hand operated, *suffer from certain disadvantages* due to the (variable) friction at the contact of the plunger and test piece; the local stresses at the contact region; the uncertainty in determining the exact stage at which failure occurs, and the difficulty of controlling the amount of slipping of the specimen at the gripping surfaces.

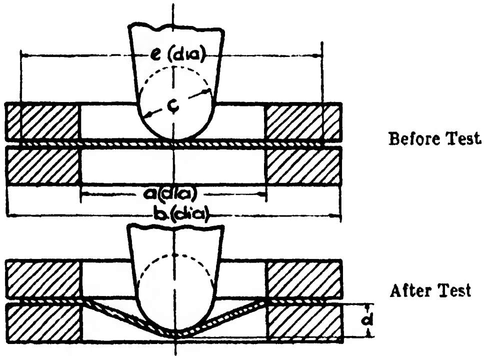

FIG. 112. DIMENSIONS OF INDENTING TOOL

	a	*b*	*c*	
Erichsen . . .	27		20	
Avery . . .	27		20	
Standard German Test .	Various			
Olsen	Various			
Persoz . . .	50	125	20	100
Amsler . .	50		20	
Guillery . .	50		20	
Standard French Test	50	90	20	90

All dimensions are expressed in millimetres.

Hydraulic Cupping Tests

In order to overcome the principal drawbacks of the ordinary cupping machine the indenting tool may be dispensed with and, instead, fluid pressure can be employed to produce the cup or bulge. In place of a "freely" located test piece the specimen is rigidly clamped in annular steel grips. The height of the dome and the fluid pressure at fracture then afford a better indication of the drawing properties

* *Vide* footnote, p. 161.

of the metal. Further, on the assumption that deformation of the specimen is spherical in shape the stress at fracture can be estimated.

The method which was originated by M. Jovignot* is illustrated in Fig. 113, which shows the forms of clamping rings used and the approximate shape of the deformed test piece. The height *h* of the dome is measured by means of a dial gauge during the test, and from the known chordal dimension corresponding to the internal diameter $2r$ of the upper clamping ring the radius R can be estimated.

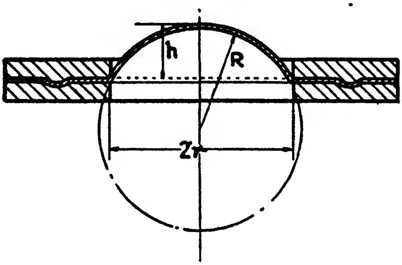

FIG. 113. FORM OF CLAMPING RING FOR HYDRAULIC CUPPING TESTS

The ductility of the test piece was defined by Jovignot as follows—

$$\text{Cupping coefficient} = \frac{h^2}{r^2}$$

Applying the formula for the strength of a thin spherical shell it can be shown that the stress p in the material at fracture is given by—

$$p = \frac{PR}{2t}$$

where P = fluid pressure, R = radius and t = thickness of test piece.

N.P.L. Cupping Tests

The method outlined was developed by the National Physical Laboratory and some valuable data have resulted. A modified form of Guillery cupping machine adapted for oil pressure tests was employed; this was used for dies of 40, 50, and 60 mm. diameter.

Preliminary tests showed that the deformed cup conformed very closely to a truly spherical cup so that the formula based on the latter assumption could be applied. It was also found that the thickness of the deformed cup varied from a maximum at the clamping rings to a minimum at the highest point of the cup, thus showing that the constraint due to clamping had an appreciable effect upon the deformation.

The results of some tests made upon different kinds of sheet metals are given in Table 28.† An examination of these results indicates that with the 50 mm. and 60 mm. dies the ratio h/r of height of cup to radius of die is practically constant for the experimental conditions of these

---

* "Method and Testing Apparatus to Determine the Extension and Breaking Load of Sheet Metals," J. Jovignot, *Comptes Rendus*, Vol. 1900, 1930.

† *Vide* footnote reference, p. 161.

TABLE 28

FLUID PRESSURE (JOVIGNOT) TESTS IN GUILLERY MACHINE

Material	Thickness, In.	Height of Dome at Fracture (mm.)†			Cupping Coefficient			Bursting Pressure, Lb. per sq. in.		
		40 mm. die	50 mm. die	60 mm. die	40 mm. die	50 mm. die	60 mm. die	40 mm. die	50 mm. die	60 mm. die
Brass . . .	0·018	11·4 [0·85]	16·9 [1·0]	25·6 [1·27]	0·32	0·45	0·73	1930	1610	1430
Copper . . .	0·016	12·3 [0·83]	18·6 [1·0]	22·7 [1·02]	0·38	0·55	0·57	1205	1025	840
Tinned iron . .	0·017	9·1 [0·77]	14·7 [1·0]	17·5 [0·99]	0·21	0·35	0·34	1740	1515	1310
Tinned iron . .	0·026	—	12·0	—	—	0·23	—	—	2280	—
Sheet iron . .	0·023	11·2 [0·90]	15·6 [1·0]	18·6 [1·0]	0·31	0·39	0·38	2280	1900	1630
Aircraft steel . .	0·013	—	> 8·1‡	—	—	> 0·11‡	—	—	> 2555‡	—
Aircraft steel . .	0·010	> 7·2‡	11·0	11·2	> 0·13‡	0·19	0·14	> 2555‡	2200	1795
Soft aluminium .	0·079	—	14·3*	—	—	> 0·33*	—	—	1785*	—
,, ,, .	0·036	—	18·3	—	—	0·54	—	—	870	—
,, ,, .	0·019	—	17·8	—	—	0·51	—	—	430	—
,, ,, .	0 010	—	14·8	—	—	0·35	—	—	210	—
,, ,, .	0·005	—	13·0	—	—	0·27	—	—	90	—
70/30 brass, soft .	0·010	—	21·2	—	—	0·72	—	—	940	—
H.C. copper, soft	0·040	—	21·2	—	—	0·72	—	—	2525	—
H.C. copper, soft .	0·010	—	15·4	—	—	0 38	—	—	495	—

* Failed by shearing round edge of die.

† The figures in square brackets refer to the relative values of the ratio, height of dome to die radius, expressed in terms of the value for the 50 mm. die.

‡ Reached limit of machine without fracturing.

tests, so that the "cupping coefficient" of Jovignot, as represented by h^2/r^2 is also nearly constant, showing that within certain limits geometrically similar domes are formed. The results given also indicate the importance of the bursting pressure value in these cupping tests.

Nature of Fracture

The nature of the fracture in hydraulic cupping tests also affords an indication of the state of the sheet metal test piece. Thus, fracture of the specimen in the case of the test results given in Table 28 usually occurred by splitting at or near the top of the dome. The direction and shape of the fracture gave a useful idea of the "directional" strength qualities of the metal. Thus, it was found that a metal which consistently split along the direction of rolling exhibited in the plain tensile test a relative weakness across the direction of rolling. Materials giving uniform tensile strengths in all directions often showed curved lines of fracture or fractures inclined to the direction of rolling.

Improved Hydraulic Machine

An improved design of oil-pressure cupping machine, enabling pressures up to 5 tons per sq. in. to be employed, instead of the maximum possible value of 1 ton per sq. in., was used in a further series of tests made at the National Physical Laboratory, and is shown in Fig. 114 with a 100 mm. diameter test piece clamped in position. The test piece *T* is firmly clamped between the top face of the pressure chamber *C* and a hard steel die *B*, by screwing down the head *H*. As the latter has to be removed each time the specimen is replaced, it is made in two parts, connected by a bayonet fitting. A leather packing ring was used to ensure oil-tightness, but as it was pressed down by an annular tongue in a corresponding annular groove on the clamping dies it did not affect the deformation of the test piece. The inner edge of the die is finished with a radius to prevent shearing of the test piece when the hydraulic pressure is applied. The pressure chamber *C* is filled with oil to which pressure is applied through the pipe *A* leading to an intensifier (not shown in the drawing) actuated by the platens of a 500-ton compression-testing machine. This pressure is transmitted to the recording apparatus through the pipe *E*. Increase of pressure moves the recording pen *P* along the axis of the drum *D*, on which a chart is fixed, while increase of the height of the "cup" causes the drum to revolve. Pressure is recorded in the following manner: The recording pen is fixed to the end of a small plunger *F*. When pressure is transmitted to the cylinder *G*, this plunger is pushed along the cylinder against the resistance of a calibrated spring *S*. By using a number of interchangeable springs of different stiffnesses, the scale of the diagram can be altered, according to the maximum pressure required. A cord *K*, passing round a pulley at one end of the drum *D*, serves to rotate the drum, and thus records the height of the "dome" in the specimen. A light rod *R*, guided vertically, rests on the centre of the test piece; to the top of this rod is fixed the end of the cord *K*, which rotates the drum.

For use with specimens of smaller diameter, a liner of the required internal diameter is fitted inside the pressure chamber; a corresponding die is fitted in the recess in the head. In this case, the oil pressure on the underside of the lower removable die assists in making the oil-tight joint with the test piece, and tests with 50 mm. diameter dies have been successfully carried out up to a bursting pressure of 6 tons per sq. in.

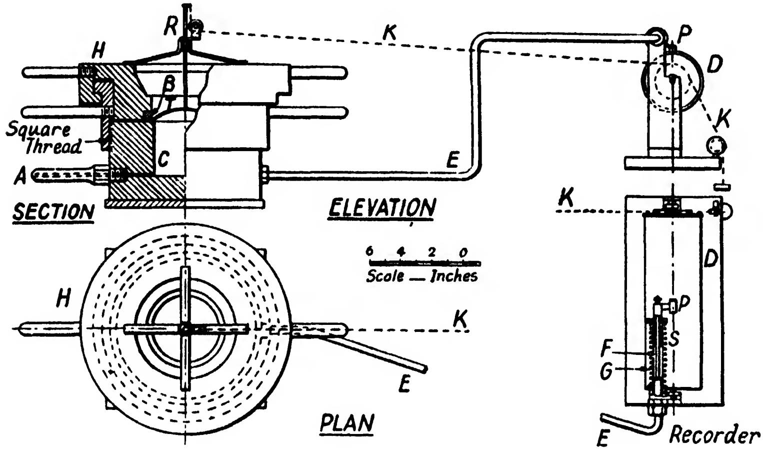

FIG. 114. N.P.L. HYDRAULIC CUPPING TEST MACHINE

Results of Hydraulic Tests

Table 29 gives some of the results of tests made in the N.P.L. machine using the 50 mm. die. These results show clearly that the cupping tests as indicated by the cupping coefficients bring out the marked differences in the ductility of the different materials.

Another interesting fact brought out by these results was that *the estimated maximum stress induced in the fractured dome* was, in the majority of cases, *practically equal to the ultimate tensile strength of the material;* in these instances the maximum stress was calculated from the formula for the strength of thin spherical shells

$$f = \frac{PR}{2t}.$$

TABLE 29

FLUID PRESSURE CUPPING TESTS IN N.P.L. MACHINE (50 MM. DIE)

Material	Thickness, In.	Height of Dome at Fracture, mm.	Cupping Coefficient	Bursting Pressure, Lb. per sq. in.
Planished steel	0·048	14·6	0·33	3,800
„ „	0·063	18·7	0·54	5,700
Aircraft steel	0·0225	10·0	0·16	4,270
Mild steel	0·040	22·1	0·76	3,630
Stainless steel (as received) .	0·064	18·5	0·53	13,550
„ „ (annealed) . .	0·066	19·0	0·56	11,920
H.C. copper (soft) . . .	0·060	22·0	0·75	3,690
„ „ (hard) . . .	0·060	10·2*	> 0·16	3,450*
„ „ (soft) . . .	0·020	19·9	0·61	1,100
„ „ (hard) . . .	0·020	11·0	0·19	1,300
70/30 brass (soft) . . .	0·060	24·9	0·96	5,500
„ „ (hard) . . .	0·060	5·5*	> 0·05	2,960*
80/20 cupro nickel (soft) . .	0·060	22·7	0·80	4,680
„ „ „ (hard) . .	0·060	11·8*	> 0·22	5,530*
Aluminium (soft) . . .	0·079	20·0†	0·62	1,870
Zinc	0·060	20·7	0·66	2,040
„	0·020	14·7	0·33	645

From the comparative results of the autographic records of fluid pressures and heights of dome obtained on the N.P.L. machine and the stress-strain curves of the materials tested it was suggested that the complete stress-strain curve to fracture of a metal should furnish a very effective basis on which to assess *the suitability of a material for cold pressing purposes.*

In order to afford a comparison of the fluid pressure test with other methods or machines for cupping tests a number of materials was tested at the National Physical Laboratory on typical machines. It is here possible to give only the results of comparative tests on one material, namely, 70/30 soft brass,‡ which are given in Fig. 114A. The oil pressure tests are indicated by the graph marked "Jovignot," which is notable for its open scale.

In general, it will be seen that the curves for the different tests are roughly of the same form—and this was found for all the materials tested—but the results do not appear to suggest that, as a measure of ductility, any one form of cupping test possesses any marked advantage over the others or over the elongation value obtained in the plain tensile test.

---

* Failed by shearing round edge of die.

† Some specimens also failed by shearing round edge of die.

‡ For fuller details of the results for other materials the reader is referred to the footnote referrence on p. 161.

B.S.I. Cupping Test Recommendations

In connection with the evidence afforded by these and similar tests it is of interest to note that the question of standardizing the cupping method of sheet metal testing has been considered by the British Standards Institution, and this body did not feel justified in recommending a test of this kind for specification purposes. It is stated* that: "There is no doubt that it does afford some indication of workability and ductility of thin metallic materials if the results are interpreted with discretion, but the test does not provide a reliable indication of the probable behaviour of the material under cold-pressing and drawing operations.

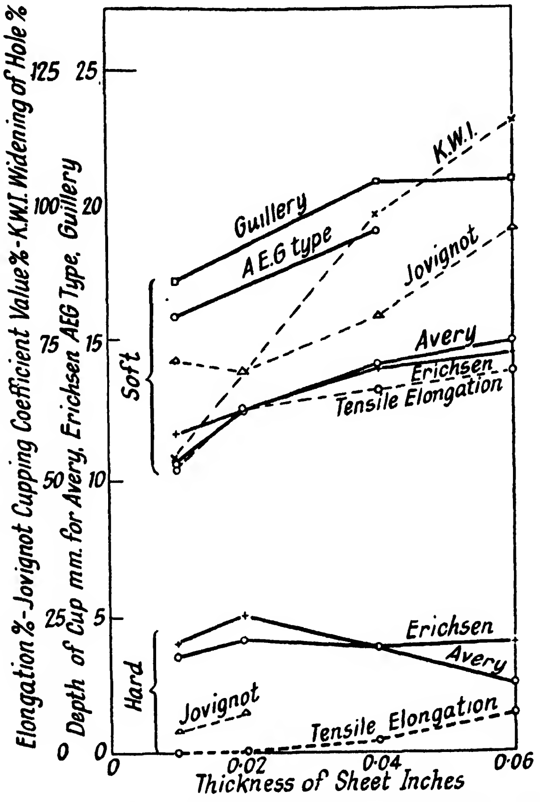

FIG. 114A. CUPPING TEST RESULTS FOR 70/30 SOFT BRASS

"The surface appearance of the dome provides an indication of

---

* B.S.S. No. 485—1934.

the original grain size of the material and the probable appearance of the surface after pressing. This particular and important aspect of drawing quality is definitely indicated by the test.

"To the depth of cup or height of dome, which is the quantitative value provided by the test, little definite significance can be attached, for different cupping machines do not check well with one another. On any one machine the results may be appreciably affected by the uncertain amount of friction between the metal under test and the distending tool, the difference in the amount of the slip and the uncertainty of determining the end point. The extent to which these factors affect the results depends largely on the individual operator. It is this lack of consistency in results obtained with different machines and the variation in results on one machine obtained by different operators which render the test unsuitable for standardization purposes. It must be stated, however, that the test can be carried out quickly and cheaply and may be useful for controlling the quality of ferrous and non-ferrous metal strip and sheet both from the producer's and user's point of view.

"The above remarks do not necessarily apply to that particular form of cupping test in which a piece of the material under examination is distorted and fractured *by fluid pressure applied to one side of the sheet.* Again, however, the information available, whilst showing that for a number of materials this test may serve to indicate satisfactorily the ultimate tensile stress of the materials, does not suggest that the fluid pressure cupping test can be regarded as sufficiently indicative of the probable behaviour of the material under cold pressing and drawing operations for inclusion in a general specification.

"It may be remarked, however, that the fluid pressure test is simple in character, is quickly carried out and subjects the specimen to approximately uniform stress in all directions simultaneously; it may, therefore, have a future industrial value in connection with the testing of thin sheet."

Deep-drawing Tests

In view of the widespread use of deep-drawing processes for sheet metals for mass production purposes it is desirable to have some form of test that will show the deep-drawing qualities of different materials and afford a reliable indication of their behaviour in the actual commercial processes. Whilst many proposals for such tests, including the previously considered cupping tests, have been advanced from time to time, the essential factors involved in deep-drawing operations do not appear to have been fully understood or allowed for in the majority of instances. Special interest, however, attaches to the results of a deep-drawing research carried out under the direction of the

Automobile Research Committee* and to which a brief reference is here given.

A study of the various aspects of the subject led to the conclusion that the cylindrical cup-drawing test had several attractive features, including almost all those associated with the cupping test. Not only does this form of test simulate practical conditions, but it furnishes information concerning the directional properties of the material by the formation of "ears"; it can give an indication of grain size and surface finish under stretching and drawing action; it reveals any tendency to change thickness during the drawing operation, and admits of extension to a second-stage draw test enabling a criterion of the extent to which a material can be subjected to multi-stage operations without intermediate annealing.

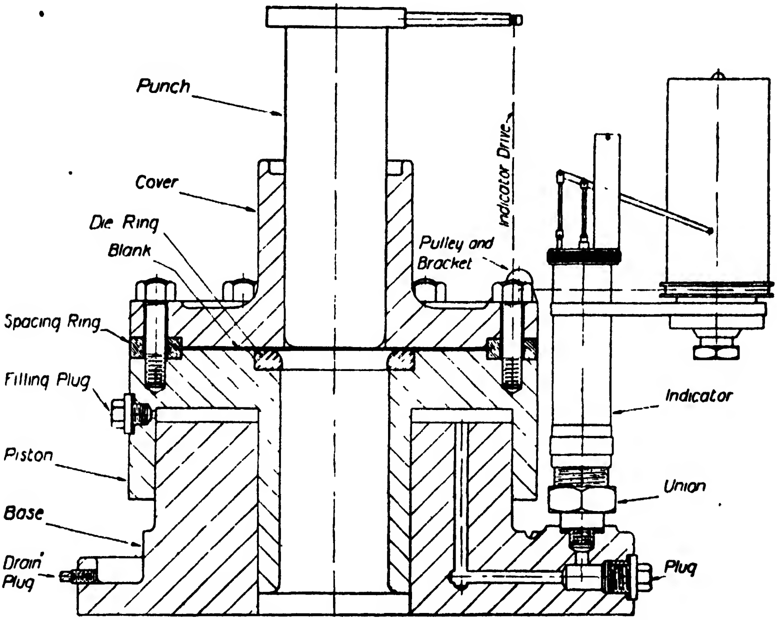

FIG. 115. APPARATUS FOR DEEP DRAWING TEST RESEARCH

The experimental apparatus employed comprised an autographic sub-press, as shown in Fig. 115, designed to produce a cylindrical cup of 2 in. internal diameter from a flat circular blank. A punch of case-hardened steel of 2·000 in. diameter, in the form of a flat-ended plunger with a radius of $\frac{1}{4}$ in. round the edge, was arranged to slide freely in a

---

* "Deep Drawing Research," Prof. H. W. Swift, *Proc. Inst. Autom. Engrs.*, May, 1940.

cylindrical guide in a cast iron cover member. The circular blank was inserted between the lower face of the cover and the upper face of the body of the press, being kept at a given distance apart by means of a spacing ring and clamped by studs passing through this ring; the inner diameter of the latter was 6 in. The mild steel body of the press had a central hole of 2⅛ in. diameter to provide clearance for the punch and pressing. A hardened steel inner ring inserted in the body formed the working part of the die; this had a radius of ¼ in. and was made in several sizes of inner diameter.

The punch load was measured and recorded by arranging for the body of the press to take the form of an annular cylinder of 7 in. outside and 3 in. inside diameter, mating with a piston integral with the base. The annular space between the piston and the body was filled with light oil and it communicated with a modified engine indicator, the oil pressure operating the piston and pencil of the indicator. The indicator drum was actuated by a cord passing round a small pulley on the cover of the press and attached to an arm projecting from the top of the punch. It was thus possible to obtain diagrams of punch load and punch movement. Arrangements were made, by the use of ball-loading devices, to ensure that the thrust was truly axial. The machine could be operated by means of a hydraulic or lever-type testing machine; or it could be inserted in a commercial press.

The machine described did not exert any specified pressure on the blank but limited the puckering or thickening of the blank according to the clearance provided by the spacer ring, but for tests where a controlled blank-holder pressure was required a special attachment was made that could be substituted for the head of the existing sub-press. With this it was possible to provide blank-holder pressures up to nearly 10,000 lb. during the actual pressing operation.

The testing apparatus was provided with a special jig to enable measurements of changes in thickness in different parts of partial, complete, and broken pressings to be made with an accuracy of 0·0001 in.

The materials tested included nine different metals, namely, mild steel, two brasses, nickel-silver, three grades of aluminium, an aluminium bronze, and electrolytic silver.

The results obtained enabled the relationship between the blank diameter, punch load and succession drawing to be determined; the stresses and strains produced by cup formation to be studied; and the effect of drawing conditions, such as blank-holding, clearances, curvatures, speed and lubrication, to be investigated.

The general form of autographic diagram obtained with the test apparatus is shown in Fig. 116, together with drawings showing the different stages in the case of a mild steel blank. The diagram shows that the initial rise of load is fairly sharp, the maximum load being reached soon after the straight portion of the walls commences to form as at *F*. In most of the tests the form of the rising curve did not vary much from that shown in Fig. 116, although the maximum load was different.

The form of the diagram after the maximum punch load had been reached also varied considerably. In some cases the curve showed a continuous rounded form with a definite maximum, but in most cases the load remained practically steady at its maximum value for some measurable period of the draw and subsequently fell rather rapidly. The curves with rounded tops were generally obtained in cases of rapid drawing, or with specially favourable conditions of lubrication, a fact which suggests that the sustained high punch load is due to the increasing effects of friction as the lubricant is expelled during the process of drawing.

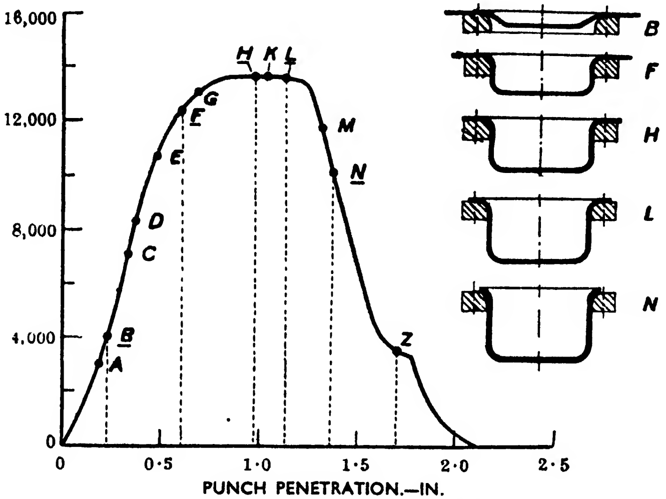

FIG. 116. LOAD-PENETRATION DIAGRAM

As soon as the rim of the cup has reached the radius of the die (*L*, *N*) and the blank-holder pressure ceases, the punch load falls, roughly in the manner anticipated, but only approximately so, because the final straightening process which occurs between the stage *N* and the finished cup demands pressure between the punch and die ring. During this stage the diagram is very sensitive to ironing and similar effects, as indicated in a mild form at *Z*.

Fig. 117 shows a number of comparable autographic press records for different materials. In order to afford a better comparison the scale for the aluminium graph has been enlarged, as shown by the dotted line diagram.

An examination of these graphs indicates that during the earlier portion of the drawing process there is a marked similarity of form which continues over the maximum pressure stage.

A good deal of information and data relating to other aspects of deep-drawing of sheet metals was obtained with the test apparatus described; for particulars of these results the reader is referred to the footnote reference on page 177.

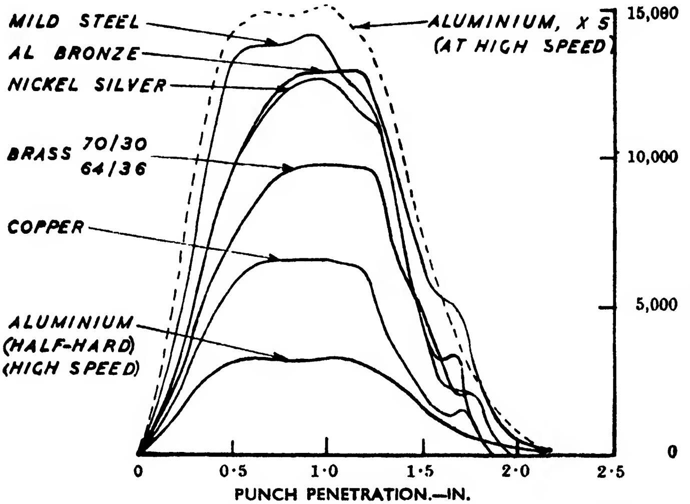

FIG. 117. DEEP PRESSING TEST RESULTS FOR VARIOUS METALS

Some General Conclusions

The general conclusions deduced from the experimental evidence on this method of deep-drawing may be summarized, briefly, as follows—

In the first place it is considered that the results are useful in assisting the rationalization of practical testing procedure, but since *the drawing test does not place materials in the same order of merit as the cupping test,* it may be regarded as a measure of a different combination of properties, so that the two tests cannot be used as substitutes for one another.

The cupping test is principally of value in simulating press operations in which *stretching is resisted by externally imposed constraints,* while *the drawing test* is applicable to operations where *the stretching which occurs is that induced by resistance to lateral drawing.* For pressings or drawings between these two test types it is necessary to correlate the results of both methods.

In regard to the drawing test the following proposals are put forward as a result of experience obtained in the series of tests described—

(1) To ensure accuracy in dimensions and absence of burrs the test blank should be machined on its outer edge.

(2) To minimize the effects of drawing speed and parasitic friction, graphite lubrication should be obtained. In the tests referred to, various lubricants were employed and tabular data are given which lead to this conclusion.

(3) Positive blank-holder clearances whilst satisfactory are not readily adaptable to different blank thicknesses and for commercial testing some form of pressure blank holder is recommended. For this purpose, if fluid pressure is employed and this was proportioned to the punch load pressure a dual fluid system would be avoided.

(4) Sufficient radial clearance should be provided between the punch and die to prevent "ironing" effects, except during the final stage of pressing; this would afford means for judging the thickening tendency of the material and geometrical perfection of the finished cup.

(5) In order to minimize friction the die profile should be provided with as generous a curvature as possible without risk of puckering.

(6) In order to minimize the effect of any small irregularities and to leave clear evidence of the surface condition of the pressing, a generous curvature should be provided on the punch. For the single-stage drawing test and probably also for the contemplated cupping test, a hemispherical end is most suitable; but for two-stage tests the first-stage pressing should preferably have a partially flat base.

(7) The linear scale of the test should be large enough to minimize the effects of tolerances in workmanship and technique, to permit measurements to be made with good accuracy and to admit, if necessary, of a second-stage draw on a reasonable scale; but at the same time it should not be so large as to demand undue power for operation or unduly wide strip for testing.

Thin Sheet Metal for Aircraft

The use of thin sheet metal, e.g. steel and aluminium alloy, in aircraft due, originally, to the substitution of metal for fabric as a covering material in braced structures has led to its use for other load-carrying purposes, in order to compensate, to some extent, for the increased weight as compared with fabric.

As a first step at weight reduction cross-bracing wires were dispensed with and the shear loads previously carried by these were transferred to the thin metal panel substitutes.

The strength in shear of a rectangular thin panel-braced framework is not primarily dependent upon the process of buckling, since in such panels buckling occurs at relatively low loads, whilst much higher loads are required to cause total failure. It has been pointed out* that after buckling has commenced, the resistance of the panel to compression across the direction of the waves is considerably reduced; but the resistance to tension in the direction of the waves is not much affected and the tensile stresses thus transmitted together with the compressive and flexural reactions that are set up in the edge bars serve to support the shearing loads. This distribution of stress may be entirely elastic, and provided objection is not raised to the appearance of the buckled panels, there is no reason why the framework should not be designed to work in this condition.

In general the problem of the strength of constructions in thin sheet metal involves two separate considerations, namely (1) the phenomenon of buckling and determination of the buckling load, and (2) investigation of the conditions after buckling has occurred. It may here be added that in the majority of aircraft sheet metal constructions buckling usually occurs at low loads and the occurrence of buckling is not, in itself, of great importance, except in the case of built-up spars and corrugated sheet constructions.

In the case of thin metal strip subject to compressive loading, the value of the buckling stress may be obtained analytically or approximately by the Ritz energy method; or it can be arrived at by experimental methods. In general the critical stress value will depend upon all the dimensions of the construction, but for a wide class of practical cases it can be stated in terms of the elastic moduli, the thickness of the sheet (t), the radius of curvature (r) and the minimum superficial dimension (b), together with a constant which may vary a little with the dimensions.

For *flat rectangular panels* the critical stress p_c is given by the general formula

$$p_c = \frac{KE't^2}{b^2}$$

where $E' = \frac{E}{(1 - \sigma^2)}$, E being Young's modulus and σ = Poisson's ratio.

K is a constant the value of which depends upon the manner of loading and the edge-fixing conditions; also upon the ratio of the sides of the panel element. For panels with all four edges clamped and subjected *to pure shear* K varies from 12·7 for a square panel to 7·4 for an infinite strip. For similar panels suitably supported and subjected

---

* "Summary of Present State of Knowledge Regarding Sheet Metal Construction," H. L. Cox, *R. and M.*, No. 1553.

to *compression* parallel to the longer sides K varies from 7·7 for a square panel to 6·0 for an infinite strip.

The subject of testing thin metal strip used for aircraft purposes has been investigated by the National Physical Laboratory,* the initial purpose of the research being to study the characteristics of buckling of thin steel strip under compressive loading, with a view to devising an acceptance test for the steel strip used in the construction of aircraft spars and struts. In the proposed form of test, a sample length of strip is subjected to shearing forces which set up principal tensile and compressive stresses, mutually perpendicular and inclined at 45° to the direction of the shearing stresses. At a certain load, depending on the dimensions of the specimen, elastic wave formation is caused. The stresses at which this elastic instability occurs depend merely upon these dimensions and the elastic constants of the material. By a suitable choice of the dimensions of the specimen, the plastic properties of the strip may be caused to produce permanent crippling before elastic instability occurs. The characteristics of elastic instability and permanent crippling have been investigated. With regard to the former, the results obtained indicate an important discrepancy with those predicted by theoretical considerations. The theoretical elastic crippling load, as deduced by Southwell and Skan, is given by the following expression which is of similar form to the general one given previously—

$$S = 22{\cdot}18 \times \frac{2Eh^3}{3\,(1 - \sigma^2)} \times \frac{1}{b^2}$$

where E = Young's modulus in tons per sq. in., σ = Poisson's ratio, $2h$ = thickness in inches, $2b$ = width in inches, S = crippling load per unit length of strip in tons.

For any particular thickness of the material this can be rewritten—

$$S = \frac{k}{b^2}$$

where k is a constant.

The experimental results obtained, however, from a very complete series of experiments on several aircraft steels, conform to a ***linear*** relation between the crippling load and the reciprocal of the width of the strip, instead of the parabolic relation indicated by the theory. A new apparatus was constructed in which strips of a free width of 3 in. were tested. Results were obtained which confirmed the previous experimental results with the original apparatus. In both these forms of apparatus, the strip under test was subjected to lateral constraint, which was not one of the conditions taken into consideration by the

---

Vide N.P.L. Reports, 1926 on, and *R. and M.* No. 1554.

theory, and it has been suggested that this fact is responsible for the discrepancy.

For thin-walled tubes under axial compression the critical stress p_c for instability of the walls is given by

$$p_c = \frac{E}{\sqrt{3(1-\sigma^2)}} \cdot \frac{t}{r}$$

The behaviour of thin sheet metal after buckling—and this initial buckled condition, as has previously been mentioned, occurs in aircraft constructions, with some exceptions, under normal loading—has been studied by different investigators, notably those at the National Physical Laboratory* and the main conclusions obtained from the investigation were summarized as under for compression conditions—

(1) When buckling occurs the stiffness of the panel is reduced, the amount of the reduction depending upon the manner in which the edges of the sheet parallel to the load are supported. When the edges are parallel to the load, simply supported, the ratio of the stiffnesses after to before buckling is $\frac{1}{3}$; with edges parallel to load clamped the ratio is $\frac{17}{38}$.

(2) As the load is increased beyond the buckling load the stiffness of the panel gradually diminishes.

(3) If final collapse occurs when a certain critical strain is exceeded in the edges of the sheet, the collapsing load (P_m) should obey a law of the form $P_m = t\,(At + Bb)$, where t is the thickness of the sheet and b the free width perpendicular to the direction of loading, and where A and B are constants.

(4) The critical strain of the edges at which final collapse occurs depends primarily upon rivet spacing and corresponds to the stress required to buckle the unsupported sheet between rivets.

Estimate of the critical strain may be rendered difficult by the necessity of estimating the effective free length between rivets.

Very close rivet spacing might lead to failure in direct compression before buckling occurred between rivets; but the rivet spacings in common use lie well above this limit.

(5) The production of permanent waves in the panel results from exceeding the elastic limit in bending. The maximum stress due to bending has been determined theoretically for the case where the edges are parallel to the load simply supported and, except in the early stages of buckling, is at any load approximately equal numerically to twice the (compressive) stress in the edges of the panel. Elastic failure in bending may affect the validity of conclusions (3) and (4) and their corollaries.

---

* "The Strength of Panel Bracing," C. W. Aldous, H. L. Cox, and H. J. Gough, and *R. and M.*, Nos. 1553 and 1554.

(6) After buckling has commenced, the wave depth is proportional to the root of the excess of the chord contraction over the chord contraction at buckling.

A complete study of the behaviour of thin sheet metal under buckling loads also involves investigations into the effects of curved panels, thickness of sheet, stiffening regions obtained by pressing grooves into the metal, torsional influences and other relevant factors.

CHAPTER VII

HARDNESS TESTING

THE property of hardness of a metal is usually associated with its resistance to *scratching*, *wear*, *indentation* or *deformation*. In the case of metals or cutting alloys employed for tools it is the *cutting hardness* which is concerned. Again, with metals that have to be fabricated by means of cutting tools hardness is largely determined by the *resistance to machining*.

Scratch Hardness

The relative hardness of a metal or other material is generally defined as its ability to scratch other metals or materials. Thus, a metal which will scratch another one is said to be harder than the latter. In this connection a well-known workshop method of testing the hardness of heat-treated steels, e.g. cutting edges of tools or the surfaces of case-hardened steel parts, is to attempt to scratch the surfaces with an engineer's file.

The relative hardness test instituted by Mohs* consisted in selecting ten different minerals and arranging these in their relative order of scratching, the softest material having the lowest numerical value on the hardness scale. The following were the selected materials and their hardnesses, as previously defined—

TABLE 30

MOHS' SCALE OF HARDNESS

Material	Order of Hardness	Material	Order of Hardness
Talc	1	Orthoclase	6
Gypsum	2	Quartz	7
Calcite	3	Topaz	8
Fluorspar	4	Corundum	9
Apatite	5	Diamond	10

Modern cutting alloys such as tungsten-carbide, stellite, and boron-carbide have hardnesses on the Mohs' scale of 9·2 to 9·7, and they will scratch most commercial glasses, quartz and sapphire; they are harder than the heat-treated alloy tool steels.

---

* Mohs, *Grundriss der Mineralogie*, 1822, Part I, p. 374.

Scratch Hardness Test Methods

Machines for applying scratch hardness tests which have mostly been used for research purposes are based upon the principle of employing a diamond with a conical or pyramidal point. The diamond holder is loaded with a known weight and drawn across the surface under test, the width of the scratch being measured with a high-powered microscope provided with a graticule scale. In the method proposed by A. Martens the conical diamond had a 90° point and the load was varied so as always to produce a scratch of 0·01 mm. in width. The hardness was then defined as the load in grammes that would produce this standard width of scratch. In a variation of this method employed by A. L. Parsons, the load on the diamond was increased from a low value, automatically, as the diamond was moved over the surface and the value of the load at the position where the scratch commenced was taken as the hardness number.

Another scratch test method employed a diamond with a pyramidal point mounted on one end of a balanced lever fitted with a sliding weight which was adjusted so that a constant weight of 170 grammes was obtained on the diamond point, whilst the latter was moved across the surface under test with two edges of the pyramid parallel to the line of scratch. The width of the impression was then measured with a measuring microscope.

An analysis of the results of scratch tests made with apparatus of the type mentioned indicates that higher relative hardness values are given for very hard steels than would be the case if tested by the Brinell method, but for less hard steels and other metals the two methods give comparative hardness values.

Another application of the scratch hardness principle is that of the quadrant sclerometer devised some years since by Messrs. Rudge Whitworth, Ltd. The principle of the method employed was that of two flat serrated rods resembling files, having hardened teeth. One of the rods (2, Fig. 118) was arranged horizontally, and the other (1) was hinged so that it could swing about a horizontal axis. This bar was raised almost to a vertical position and the test piece, in the form of a short cylinder (3), was placed between the two rods (1) and (2) in the angle, as shown in Fig. 118. The rod (1) was then lowered until the serrated edges just began to indent or grip the test bar. The angle at which this occurred was taken as a measure of the scratch hardness of the test bar. For the hardest bars this angle was from 10° to 20°, and for soft steel bars about 70°.

Abrasion Tests

Closely associated with the scratch hardness test, the abrasion method of testing the hardness as defined by resistance to wear is based upon measurement of the wear or loss of surface material when subjected to a specified load or bearing pressure and rubbing speed over a given time period. The test pieces are usually made in the form of short cylindrical shafts which are loaded by means of a weighted bearing of extremely hard steel. The test piece is run for a definite number of revolutions—usually of the order of a million— at a given speed, namely, from 2000 to 4000 r.p.m., without lubrication. At the end of this test the final diameter of the test piece is measured. It is found that *the resistance to rolling abrasion is inversely proportional to the reduction in diameter*, but although for ordinary steels and non-ferrous metals the resistance to rolling abrasion is nearly proportional to the Brinell hardness number, the method is not generally reliable since certain metals, e.g. manganese steels, are subjected to work-hardening effects under the test conditions.

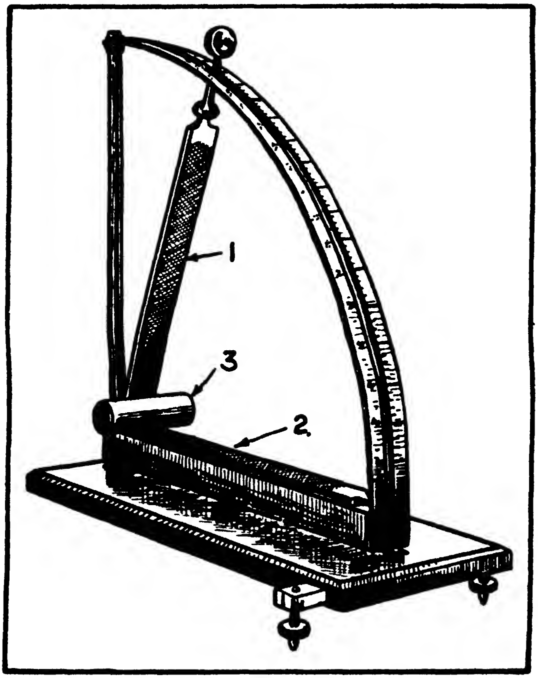

FIG. 118. THE QUADRANT SCLEROMETER FOR SCRATCH RESISTANCE TESTS

Several variations of the simple shaft-and-bearing abrasion test method have been proposed by different experimenters ;* these include

---

* *Vide Mechanical Testing*, R. G. Batson and J. H. Hyde (Chapman & Hall, Ltd.).

abrasion testing with extremely hard abrasives or grinding wheels, the use of sandblasting on the surface under test, lubricated sliding abrasion, wear by dry sliding abrasion using high pressures and small relative motion, combined dry sliding and rolling abrasion, etc. In each of these methods, however, an arbitrary scale of abrasion or wear hardness is employed, but whilst it is found that there is a general decrease in the amount of wear with increase in Brinell hardness, the results are not very reliable since in some instances softer steels exhibit less wear than harder ones.

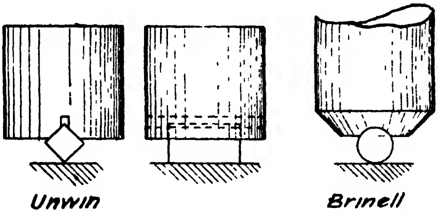

FIG. 119. ILLUSTRATING TWO DIFFERENT HARDNESS TESTING METHODS

Typical abrasion testing machines are described later.

Other Hardness Testing Methods

Whilst the scratch hardness method affords a reliable indication of the surface hardness of metals and has the advantage, not possessed by the various indentation methods described later, of not being affected by the thickness of the specimen, it is not a convenient method in the commercial test sense. Moreover, it produces a scratch which is liable to reduce the fatigue strength of the part tested.

Of the other numerous available methods of testing the hardness of metals, those that have been adopted for routine test purposes may be classified as follows—

(1) *Indentation Methods*, in which the dimension of the impression made by a hard indenting tool, applied with a known load, to the surface of the metal under test is taken as a measure of the hardness of the metal; usually it is the depth of impression which is taken as a measure of the hardness.

Various forms of indenting tool have been employed for this purpose. Thus in Unwin's method,* a straight piece of square-sectional bar placed diagonally to the surface under test, as shown in Fig. 119, was used. With this method it was found that there was a definite relation between the load and depth of indentation, namely, as follows

$$p^n = c \, . \, i$$

---

* *Testing of Materials of Construction*, Unwin.

where p is the pressure per inch width of the indentation tool in tons, i the indentation depth in inches, and c and n are constants for the material.

The value of n varied from 1·14 for soft materials, such as zinc, to 1·20 for steels, whilst c ranged from 4·2 for lead up to 866 for cast steel hardened right out in oil. For all practical purposes a value of $n = 1{\cdot}20$ was found to give sufficiently accurate results. The loads per inch of the indenting tool varied from about 18 tons for hard steel down to a fraction of a ton for soft metals, such as lead.

The Unwin method, which depended upon the use of a hard steel knife-edge, whilst giving a wide scale of hardnesses was open to the objection of wear or deformation of the indenting tool on the harder metals and to difficulty of alignment of the edge, so that uneven pressure on the specimen was liable to occur.

In the Brinell method a hardened steel ball is used as the indenting tool, whilst in the *Vickers diamond hardness testing machine* a pyramidal diamond indenter is employed.

In the case of the *Rockwell machine* and the *Firth Hardometer*, either a steel ball or a diamond indenter is employed, according to the nature of the metal that is under test.

Another application of the indentation test method is that of the *Herbert pendulum hardness* testing machine in which a steel ball or diamond, under a standard load, is used to make an impression in the metal under test and a compound pendulum is then allowed to oscillate with the indenter in its impression; the time of oscillation is taken as a measure of the hardness. In this method the work-hardening property of the metal is the chief factor concerned.

Limiting Hardness of Indenter

In all of the indentation methods employed for measuring hardness it is *the plastic deformation of the metal* which is assumed to be a measure of the hardness.

In regard to the use of hardened steel balls for testing the hardness of metals, when the hardness of the metal under test approaches that of the steel ball, distortion of the latter occurs so that unreliable results are obtained in applying the usual ball impression measurement value in the formula employed to determine the hardness on the Brinell scale. Thus, materials exceeding 500 on the Brinell scale tend to deform the ball and there is little discrimination in the hardness values above this range.

It is noteworthy that the British Standards Institution has issued a specification, namely, B.S.S. No. 240. Part 2, "The Hardness of Steel Balls for Brinell Hardness Testing," which states that *the hardness of the steel balls* used in Brinell testing is determined by a pyramidal diamond indentation test with a definite load for a period of 15 secs. The hardness of the ball under test is defined as the quotient of the applied load in kilogrammes divided by the pyramidal area of the impression in sq. mm.; account must be taken of the curved upper edges of the pyramidal impression when estimating the area in question. The recommended loads for balls of 1, 2, 5 and 10 mm. diameter are 10, 20, 50 and 100 kg., respectively. The standard pyramidal angle of 136° between opposite faces is employed for the diamond indenter.

Incidentally, a file test can be used as a rough indication of the surface hardness of balls. If a ball can be scratched by a new file its diamond hardness is probably below 850.

When the hardness of the metal under test exceeds about 500 Brinell the steel ball indenter must be replaced with a *diamond pointed one.* This is made to pyramidal form with the British Standard Institution's recommended angle of 136° between opposite faces and a different scale of hardness values, known as the *diamond hardness number* (D.H.N.) scale, is used instead of the Brinell one.

It should here be emphasized that the steel ball or diamond indentation method does not measure the wear hardness or resistance to machining but assumes the hardness of the metal to be its resistance to indentation, and employs a purely arbitrary scale of hardness—or, more correctly, several hardness scales according to the method and apparatus used. The original Brinell scale is conventionally accepted as the arbitrary standard, and conversion tables or graphs are available for expressing the results of other indentation methods on the Brinell scale. Further reference to this subject is made later in this chapter.

(2) *The Rebound Method.* In this method a small steel drop hammer provided with a diamond tip is dropped on to the test surface from a given height and the vertical rebound height is measured on a scale provided for the purpose. If the metal under test is relatively very soft the hammer will expend most of its energy in making a comparatively big impression, and owing also to the lack of elasticity of the metal it will only rebound to a small extent. If, on the other hand, the metal under test is a very hard one, the hammer will make only a slight impression, and, owing to the relatively high elasticity of the metal, will rebound to a much greater extent. Thus, the height of the rebound of the hammer is taken as a measure of the hardness of the metal.

A little consideration, however, will show that in this method the measurement obtained is that of *the plastic deformation and also the elastic deformation of the material* so that it differs from the indentation method which is based upon the plastic deformation property only. Conversion scales are provided for obtaining the equivalent Brinell scale values to those of the rebound test.

The Shore Scleroscope and Duroskop hardness testers are based upon the rebound principle described, and they have an advantage over the Brinell and diamond hardness methods in leaving a smaller permanent impression in the surface of the metal tested.

The rebound principle is also utilized in the *Herbert "cloudburst" hardness tester* employed for case-hardened and nitrided surfaces, in which the surface under test is subjected to a continuous bombardment by steel balls dropped from a given height over the whole area of the surface under test. The height of fall is adjusted to the standard hardness required, and any areas of the surface softer than this are revealed by slight indentation roughness. No measurements are made and the surface is not indented in the manner of the Brinell or diamond hardness test; moreover, relatively large areas of surface can be tested in this manner as distinct from a single point or small area—as in the single indenter method. Yet another application of the large area rebound principle is that of the abrasive powder impact method* whereby a large number of sand, emery or similar abrasive particles are dropped from a given height on to the surface. These are randomly orientated when they hit the surface so that the whole of the latter is affected. The average shape and size of the impressions depend only upon the hardness of the surface material whilst the number of indentations varies with the amount of abrasive material used.

The average size of the impressions is measured by the reduction in the specular reflectivity of the surface, and this, therefore, furnishes a measure of the surface hardness.

(3) *Other Methods of Measuring Hardness.* Apart from what may broadly be described as the mechanical methods of hardness measurement outlined under the headings (1) and (2) there are several others based upon certain physical properties which vary with the hardness of the metal. Most of these methods, however, are chiefly of academic or experimental interest, and so far have not been adapted to commercial test conditions.

Of these physical methods perhaps the more interesting are those based upon the magnetic properties of ferrous materials. Thus, it has been found that many ferro-magnetic materials in the form of rods *when subjected to a longitudinal magnetic field change their length,* and that the harder the material the smaller is the increment in length of the rod. This property was discovered by Joule as long ago as 1847, and has since been applied as a means of determining hardness. Fig. 120 illustrates the relationship between the magnetic increase in length and the Scleroscope (rebound method) hardness, for various steel specimens indicated by the numbers. It has also been shown† that by

---

* "Measuring Surface Hardness of Metals," Dr. Bruce Chalmers, *The Machinist,* 28th March, 1942.

† S. R. Williams, *Scientific American,* September, 1943.

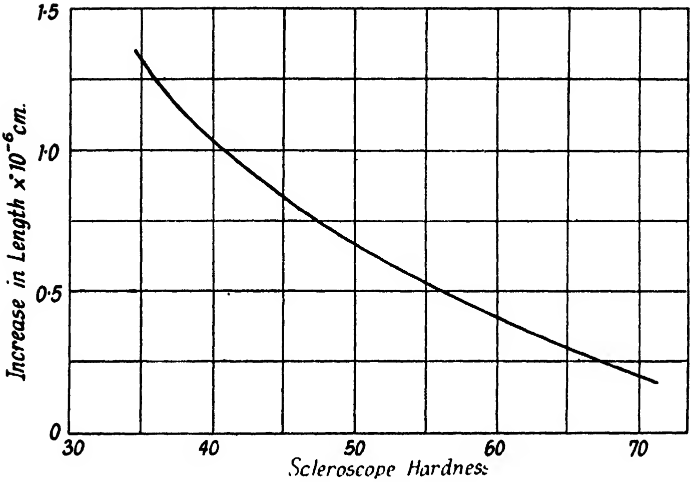

FIG. 120. MAGNETIC INCREASE IN LENGTH AND HARDNESS

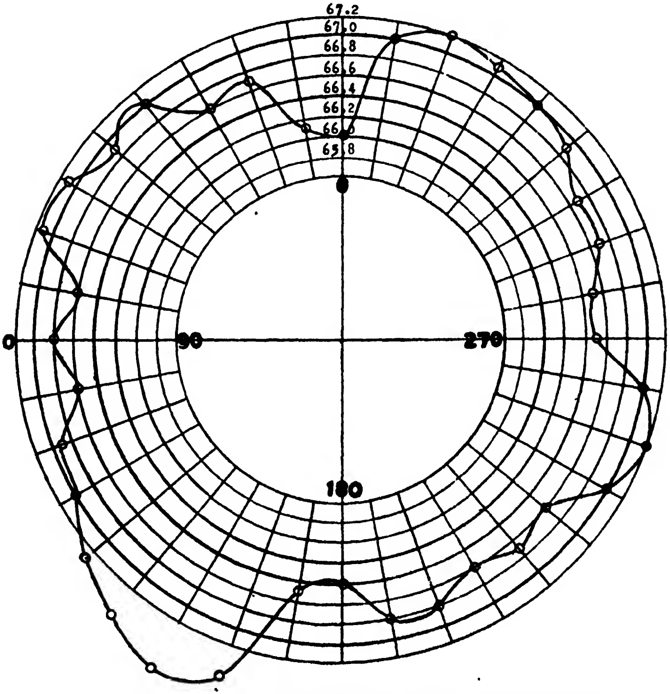

FIG. 121. ROCKWELL HARDNESS VALUES OVER SURFACE OF HARDENED STEEL BALL

reversing the magnetic fields on a piece of steel several times and then measuring its change of length, the increment of length increases with the number of field reversals, i.e. by magnetically working a piece of steel it is softened.

The hardness of steel balls has been measured by magnetic methods, by S. R. Williams.* The steel ball is placed in a special cup fitting on one of the poles of a horse-shoe magnet and the distortion of the magnetic field is measured by a magnetometer. The greatest distortion occurs where the permeability is largest, which in general is true the softer the ball used. Thus a softer ball will give a larger deflection of the magnetometer needle than a harder one. The balls are demagnetized before being subjected to this test, in order to get rid of any residual magnetism which, otherwise, would give unreliable results. Fig. 121 shows the Rockwell hardnesses of a $\frac{3}{4}$ in. diameter hardened steel ball, obtained by the magnetic method described; the magnetometer readings have here been converted to equivalent Rockwell hardness numbers. The results indicate an appreciable variation of hardness in different parts of the steel ball.

Having referred to the various available hardness testing methods it is now proposed to consider the more important commercial applications in some detail.

The Brinell Method

This, the most widely used commercial hardness testing method in this country, consists in pressing a hardened steel ball into the material under test, using a ball of specified diameter and with a given load on the ball. The depth of the impression is taken as a measure of the hardness. Since the diameter of the impression is proportional to the depth it is usual to measure this diameter and to employ a formula containing this diameter. In some hardness testing machines, however, the depth of impression is measured directly, using a modified type of engineer's dial indicator suitably engraved with the corresponding hardness numbers.

When the steel ball is pressed into the surface the impression made resembles that shown in Fig. 122.

If D = diameter of steel ball, d = diameter of impression, and h = depth of indentation, in millimetres, then

$$h = \tfrac{1}{2}\left(D - \sqrt{D^2 - d^2}\right) \text{ mm.}$$

As originally devised by Brinell,† in 1901, the Brinell Hardness

---

* "Hardness Testing of Steel Balls by Magnetic Methods," *Trans. Amer. Soc. for Steel Testing*, Vol. 5, 1924.

† "Methods of Testing Steel," Brinell, *Inter. Assoc. Testing Materials*, 1901 (Paris), Vol. II, p. 81.

Number is defined as the quotient of the applied load P kilogrammes divided by the *spherical area* of the impression; this area is, of course, different from the cross-sectional area of the impression at d.

The spherical area of the portion ABC (Fig. 122) is given by the following formula—

$$\text{Spherical Area } ABC = \frac{\pi D}{2}\left(D - \sqrt{D^2 - d^2}\right)$$

and the Brinell Hardness Number

$$\text{B.H.N.} = \frac{P}{\frac{\pi D}{2}\left(D - \sqrt{D^2 - d^2}\right)}$$

$$= \frac{P}{1{\cdot}5708D\left(D - \sqrt{D^2 - d^2}\right)}.$$

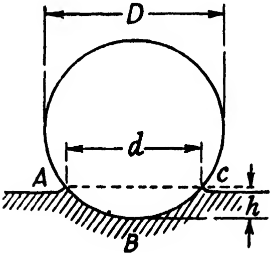

FIG. 122

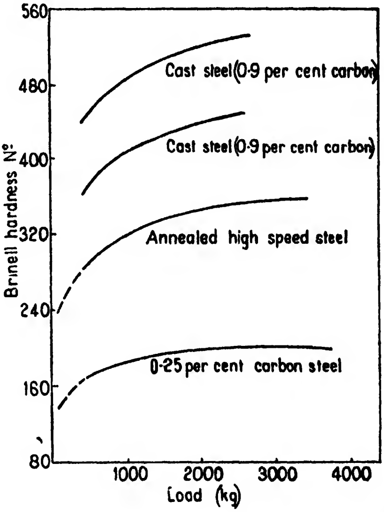

FIG. 123. VARIATION OF HARDNESS NUMBER WITH LOAD

One difficulty that was experienced in the application of this method was that, for a ball of given diameter, it was found that the Brinell hardness number varied with the load. This is clearly shown by the results given in Fig. 123* for different kinds of steel, using a 10 mm. ball and loads up to 3000 to 4000 kilogrammes. The same type of variation of hardness number with load occurs with other metals.

It has been established by Meyer† that the load P is related to the diameter D of the indentation as follows—

$$P = k \, . \, D^n$$

where k and n are constants depending upon the material and ball diameter; the value of n is approximately 2.

In order to obtain comparative results the British Standards

---

* "The Inspection of Metals and Their Alloys," L. W. Johnson, *Proc. Inst. Autom. Engrs.*, 1929–30.

† E. Meyer, *Zeits. Vereines Deutsch. Ing.*, 1908, p. 645.

Institution (B.S.I.) has fixed the relationship between the load P kg. and ball diameter D mm. in four groups, such that the ratio $\frac{P}{D^2} = 1$, 5, 10 and 30, respectively, and in all hardness tests upon materials it is necessary to state the value of $\frac{P}{D^2}$ employed. As a guide to the selection of the appropriate ratio, it is stated that for hardness numbers above 160 the $\frac{P}{D^2}$ ratio of 30 should be used; from 60 to 160, the ratio 10; for 20 to 60, 5, and up to 20, the ratio 1.

For guidance in specifying an appropriate value for the ratio $\frac{P}{D^2}$ the approximate values for representative materials are as follows—

Steels; cast iron	30
Copper alloys; aluminium alloys . . .	10
Copper; aluminium	5
Lead, tin, and their alloys . . .	1

The load should be applied slowly and progressively to the specimen at right angles to the surface and the full load maintained for a period of 15 secs.

When such a test has been made the usual procedure is to measure the diameter of the impression with a microscope fitted with a graticule scale and then to read off the corresponding Brinell hardness number from a set of tables, namely, the B.S.I. values given in the Specification referred to at the foot of this page*. These tables give the hardness numbers for different diameters of ball (10, 5 and 2 mm.) and loads (3000, 1000, 750, 500, 250, 125, 120, 100, 40, 25, 20 and 4 kg.).

Table 31 shows some typical Brinell hardness numbers for different metals.

Ball and Impression Diameters. In regard to the selection of the proper P/D^2 ratio for any test it is useful to note that the ratio of the diameter of the impression to that of the ball should preferably lie between 0·30 and 0·50 and should not exceed 0·60.

Limitations of the Brinell Method

Although the Brinell method, on account of its convenience and relative simplicity in application, has been widely adopted in this country, it is open to certain criticisms.

Thus, it gives only the hardness value at a single point on the test specimen and not over the area of the surface; in view of the fact that the hardness of many metal parts is known to vary both from the core

---

* "Method and Tables for Brinell Hardness Testing," B.S.I. Specification No. 240, Part I, 1937.

TABLE 31

BRINELL HARDNESS OF DIFFERENT METALS AND ALLOYS

Material	Brinell Number
Lead, cast	4–8
Babbitt metal	10–25 (cast)
Tin	15–25 (annealed or cast)
Zinc, sheet	25–40
Copper, sheet	30–60
Silver	40–70
Gold, 14–24 carat	50–140 (annealed)
Wrought iron	70–85
Bronze, phosphor, sand-cast	80–95
Mild steel	80–105 (as drawn or rolled)
Duralumin plate, medium	90–120
Brass, medium-drawn	100–150
Bronze, phosphor, chilled	100–180
Cast iron, grey, sand-cast,	115–200
Brass, hard-drawn	120–170
Bronze, manganese, drawn	120–220
Nickel steel	130–160 (annealed)
Duralumin plate, hard	140–160
High-speed steel	150–260
Vanadium steel	150–300 (annealed)
Nickel-chrome steel	175–300
Tool steel, annealed	200–275
Cast iron, grey, chilled	230–400
Nickel steel, hardened	300–600
High-speed steel, hardened	450–700
Tool steel, tempered at 600° F.	550–700 (glass hard at 625)
Nickel-chrome, air-hardened	600–700

to the surface and over the surface itself, the Brinell method is applicable, strictly speaking, only to specimens of uniform hardness, as in the case of certain annealed parts.

When the steel ball is impressed upon the metal specimen the material around the ball is distorted and flows outwards, and also tends to pile up around the edges of the impression (Fig. 122) owing to the plastic flow conditions. Moreover, when the load is released there is a certain elastic recovery—which varies in extent with different metals and their conditions—so that the shape of the impression after removal of the load is slightly different from that under the load; thus, the radius of curvature of the impression after the release of the load is greater than that of the ball, since there is more elastic recovery at the lower part than around the edges of the impression.

When *thin specimens* are subjected to the Brinell test, the nature of the plastic flow is appreciably different from that obtained on thick parts, so that unreliable hardness numbers are given. It is therefore necessary to limit the thickness of the test specimen. Thus, the B.S.I.* specifies the thickness to be at least 10 times the depth of the impression as given by the following formula—

$$\text{Depth of impression (mm.)} = \frac{P}{\pi DH}$$

where P = load in kg. D = diameter of ball in mm., and H = Brinell hardness number.

In some instances and for certain materials lower values than those given in the preceding formula may be permissible.

The minimum thicknesses of sheet materials for various hardness ranges are shown in the following table, from which it will be observed that the harder the metal the thinner it can be, without introducing errors in the Brinell test results.

TABLE 32

MINIMUM THICKNESSES AND BRINELL NUMBERS

Brinell Hardness No.	Minimum Thickness (in decimals of an inch)	
Above	10 mm. Ball	5 mm. Ball
100	0·3125	0·1250
150	0·2500	0·9370
200	0·1875	0·0781
300	0·1250	0·0625
400	0·0937	0·0468
500	0·0625	0·0310

Brinell impressions cannot be made near to the edge of a specimen for a similar reason to that given in the case of thin sections; thus it is necessary, for reliable readings, to arrange for *the centre of the impression to be not less than 2½ times the impression from the edge of the specimen.*

The condition of the test surface has a certain bearing upon the results, making it necessary to specify well-polished surfaces for Brinell tests with balls of 1 mm. or 2 mm. and surfaces finished by filing, grinding or smooth machining for 5 mm. and 10 mm. balls.

When the Brinell method is used *for non-elastic materials* such as lead and certain of its alloys the hardness value obtained is not actually comparable with the values derived from elastic-plastic materials.

As pointed out earlier in this chapter, the Brinell ball method can

---

* B.S.I. No. 240, Part I—1937.

only be applied to materials having hardnesses below about 500, i.e. to certain hardened and tempered steels, but not to tool steels hardened right out or case-hardened or nitrided steel surfaces. The upper range of the Brinell test is thus limited and recourse must be had to another method involving the use of a diamond indenter of pyramidal shape, with a different scale of hardness numbers.

Finally, the impression made by the ball on small production pieces is often a disadvantage in certain applications, where all the surfaces have to be used, i.e. for wear-resisting or bearing properties.

Brinell Hardness and Tensile Strength

It has long been known that the Brinell hardness of a metal increases with the tensile strength value of the metal, and that for certain kinds of materials it is possible to predict the tensile strength from the *average* Brinell hardness. It is important, however, to ensure that there are no appreciable hardness gradients due to the mass effect of heat-treatment, more particularly in large section specimens. It is advisable to utilize specimens of uniform hardness for tensile strength estimates.

Again, in certain copper-rich alloys, grain size and other microstructural conditions tend to give erroneous values of the hardness so that reliable tensile strengths cannot be obtained.

For most materials the average Brinell number and tensile strength are proportional, i.e. follow a linear relation. Thus

$$\text{Tensile strength} = k \times \text{Brinell number (tons per sq. in.)}.$$

An analysis of a large number of strength and hardness tests* indicates that for standard plain carbon and alloy steels the value of k is 0·217 over the Brinell range of 100 to 550. For plain carbon steels the value of k is 0·22; for mild steel it is 0·23.

For certain austenitic steels such as high nickel-chromium ones which, in the soft condition, have low yield points a higher value for k must be used, namely, from 0·23 to 0·25.

The values shown in Table 33 were given by Messrs. Edgar Allen, Ltd., Sheffield.

The results of a large number of tests† made upon various alloy steels, including bullet-proof and corrosion-resisting ones, in the form of steel bars and forgings indicate that there is a general linear relation between the *pyramidal diamond hardness* and tensile strength over the range of 100 to 700 hardness. All of the experimental test values lay

---

* "The Inspection of Metals and Their Alloys," L. W. Johnson, *Proc. Inst. Autom. Engrs.*, 1929–30.

† "The Hardness Test as a Means of Estimating the Tensile Strength of Metals," W. J. Taylor, *Journ. Roy. Aeron. Society*, 1942.

TABLE 33

TENSILE STRENGTH FACTORS FOR ALLOY STEELS

Alloy Steel	k
Chrome steel	0·242
Nickel-chrome steel	0·240
Nickel steel	0·239
Vanadium steel	0·235
Carbon steel	0·232

between the limits $k = 0{\cdot}20$ and $k = 0{\cdot}23$; thus a steel whose pyramidal hardness was 250 would have a tensile strength of 50 and 57½ tons per sq. in., which represents a possible variation of ± 8 per cent from the mean strength value of 54 tons per sq. in.

For wrought light alloys L. W. Johnson has proposed the following relation—

$$\text{Tensile Strength} = \frac{\text{Brinell No.}}{4} - 1 \text{ (tons per sq. in.)}$$

For aluminium alloy sheet, strip and tubes the limiting value of k is given as 0·21 to 0·26, using pyramidal diamond hardness numbers. For aluminium alloy forgings where grain size is appreciably larger than for the ferrous materials, the value of k for Brinell hardness numbers lies between 0·20 and 0·27; for bar 0·23 and 0·29; and for extruded sections, 0·19 to 0·23.

For light magnesium alloys, with the somewhat limited data available the value of k, for Brinell readings, appears to lie between 0·27 and 0·34. For copper-rich alloys large variations in the value of k have been observed by different authorities, namely, from 0·25 to 0·35.

In applying the results of Brinell or diamond hardness tests to the determination of tensile strengths, it is important to take into account the state of the metal, i.e. its constitutional condition. Thus, the same analysis of metal or alloy will give a variation in hardness values in the forged, hot or cold-rolled, extruded, cast, or heat-treated conditions, and appropriate values of k should be used for each of these states.

Heat-treatment and Hardness

In connection with the effect of heat-treatment on the hardness of an alloy steel, it is possible to obtain a wide range of Brinell hardness values. Thus, if the steel is heated to its appropriate quenching temperature and quenched or air-cooled—according to the class of steel—it can be tempered at different temperatures from 0° to about 650°

and quenched so as to give various hardnesses, with corresponding tensile strength values.

Fig. 124 shows the hardnesses, on the Brinell scale, of an air-hardening nickel-chrome steel, for different tempering temperatures. The tests* were made on 1 in. diameter bars, air-hardened at 810° C. and tempered by heating to the temperatures shown. The test bars were cooled in still air from the given tempering temperatures.

It will be observed that the hardness values remain fairly constant at 450, from 0° C. to about 200° C., and thereafter decrease until at 650° C. the hardness has dropped to about 250. Most alloy steels of the nickel-chrome class, with maximum tensile strengths of 90 to 120 tons per sq. in., in the heat-treated condition, show maximum hardnesses of 450 to 550 for tempering temperatures of 0° to 200°, and minimum hardness of 200 to 300 for temperatures of 600° C. to 650° C.

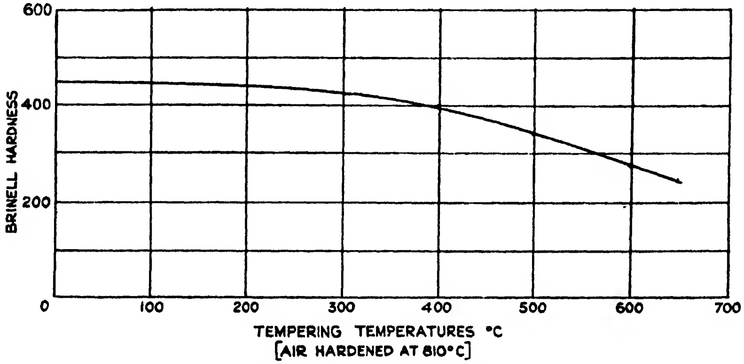

FIG. 124.·HARDNESS VALUES OF NICKEL-CHROME STEEL FOR DIFFERENT TEMPERING TEMPERATURES

Hardness Variation Across Section

As mentioned earlier, the hardness of a metal part often varies from the outside to the inner core. This is more particularly the case with forgings, cold-worked bars, castings, and large heat-treated articles; the variation of hardness of surface-hardened steels, from the surface to the core, is another instance, but outside the present considerations. In order to obtain an indication of the hardness variation of, say, a specimen cold-work bar, casting or forging, a cross-section can be taken, machined flat and finished smooth. Brinell impressions can then be made across the section and on the outside (preferably before cutting the section).

The results of such a test made on a cold-drawn phosphor bronze

---

* Messrs. Armstrong, Whitworth, Ltd.

bar of 3½ in. diameter gave a Brinell hardness of 174 when tested on the surface, and the following values when tested at different points along a radius of a cross-section.

Distance from surface, in inches	0	0·25	0·50	0·75	1·00	1·25	1·50	1·75
Brinell hardness . . .	174	171	160	150	138	125	113	107

Brinell Hardness Testing Machines

From the preceding account of the nature of the Brinell test and the B.S.I. specified conditions it will be apparent that the essential requirements of the testing machine are: (1) A ball-ended indenter; (2) means for applying the specified load for the material and size of ball; (3) provision for measuring the load and preventing any excess above the specified value; (4) a quick release gear for the load after the specified indentation maximum load period of 15 secs.; (5) suitable anvil, table or clamps for holding standard test pieces or actual production parts; (6) means for reading off the diameter of the impression or of indicating directly the depth of impression (or the equivalent Brinell number).

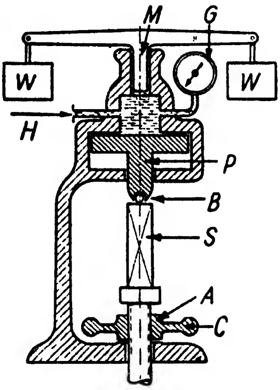

Fig. 125. Principle of Hydraulic Brinell Testing Machine

In addition, most modern machines are arranged to carry out tests with different sizes of balls, up to 10 mm. diameter, and also diamond indenters, with loads up to 3000 kg.

There are many different designs of Brinell machine on the market, some designed to carry out standard tests on small specimens, others to make hardness tests on production components of various shapes and sizes. It is not possible, nor is it desirable, to describe all of these machines, since the same basic principles are employed in each. Typical machines have therefore been selected to illustrate the general application of the basic ideas.

Fig. 125 shows, diagrammatically, one popular type of Brinell machine which utilizes hydraulic pressure to apply the load. The specimen *S* under test is placed on an anvil *A* which is adjusted up and down by a screw-nut wheel *C* until *S* makes contact with the ball indenter *B* carried in a chuck fitting forming part of the plunger *P* of a hydraulic press unit. When pressure is applied to the oil in the plunger cylinder through the inlet *H*, the plunger *P* and the ball indenter are forced downwards, the pressure being increased until its value is such that the deadweight plunger *M*, carrying the cross bar and weights *W*, is just lifted. The weights *W* and diameter of the plunger *M* are selected to give the correct pressure value to ensure that the total load on *P* is the specified test load. A pressure gauge *G* is also provided. This is graduated in kilogrammes and affords an indication of the approach to the required maximum load on *P*. The pressure through the inlet *H* can be applied by a small hand-operated pump or by a motor-driven one, and when a test is being made the pressure is increased until the weights lift. The load is then maintained for 15 secs. and the pressure is quickly released by opening a relief valve in the plunger cylinder.

The J. W. Jackman and Olsen-Brinell machine (Fig. 126) operate upon the hydraulic method described. The use of hydraulic loading enables the load to be applied smoothly, i.e. without jerks, whilst the substitution of different values of weights *W* (Fig. 125) provides a convenient means of altering the ball loads.

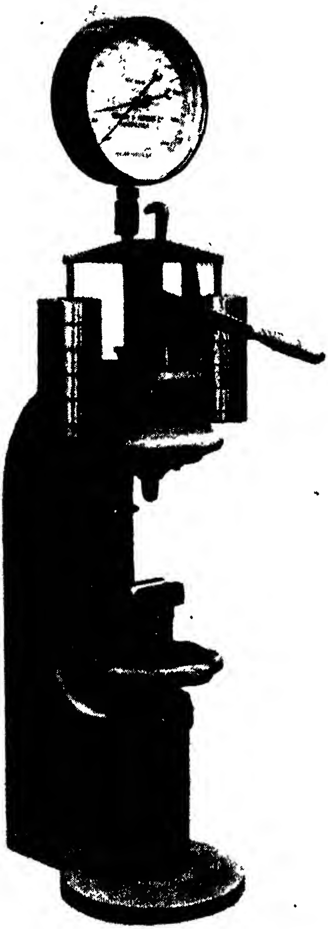

FIG. 126. THE OLSEN HYDRAULIC BRINELL HARDNESS TESTING MACHINE

The Avery Brinell machine, Type 691, illustrated in Fig. 127 operates on the platform weighing principle, the load being applied by means of a hand wheel through gearing to a square-threaded nut engaging a vertical screwed member carrying at its lower end the ball indenter. The construction of the machine as shown in Fig. 128 is similar to that of a platform weighing machine. The seating *A* on which the specimen is placed is supported by a lever *B* in the base of the machine by means of hardened steel knife-edges and bearings. This lever in turn is connected to a transfer lever *C* at the end of which are tension rods *D* connecting the two steelyards which can also be seen in Fig. 127.

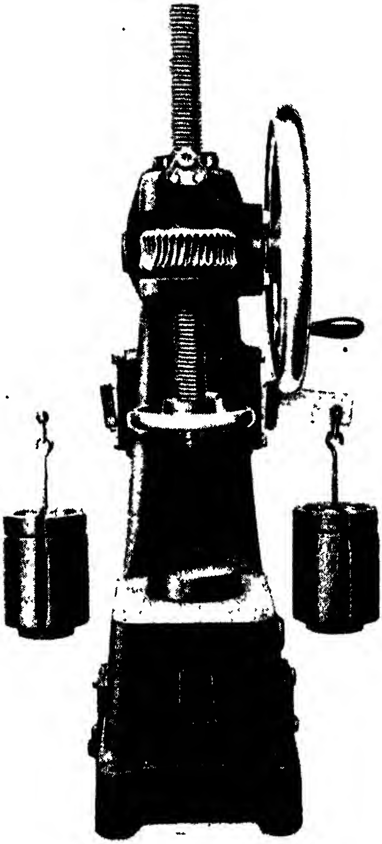

FIG. 127. THE AVERY BRINELL MACHINE

Pressure applied to the seating *A* is transmitted by means of accurately gauged levers to the weighing steelyards, on which the load is balanced by means of the proportional weights. The load is gradually applied by means of the hand wheel through a worm-drive.

The ball can be set quickly in contact with the specimen before making a test by releasing a catch and turning the screw by means of the hand wheel.

The method of making a test consists in placing the specimen on the seating and then bringing the ball almost into contact with the surface of the specimen by turning the hand wheel. The catch is replaced in position and the hand wheel is turned a few times until the steelyards rise to a horizontal position. After 15 secs. the pressure is released by turning the hand wheel in the opposite direction. The diameter of the impression is then measured with the microscope provided for the purpose. This is provided with a graticule scale (Fig. 129) which enables readings to be taken to 0·05 mm. over the range of the scale, namely, 10 mm. The reading of the impression shown in Fig. 129 is 4·15 mm.

The machine described is calibrated by dead-weight loading, using a special loading bridge, up to its maximum capacity of 3000 kg. The accuracy is such that the machine can be employed for small ball tests on thin material in accordance with B.S.I. test specifications for loads down to 30 kg.

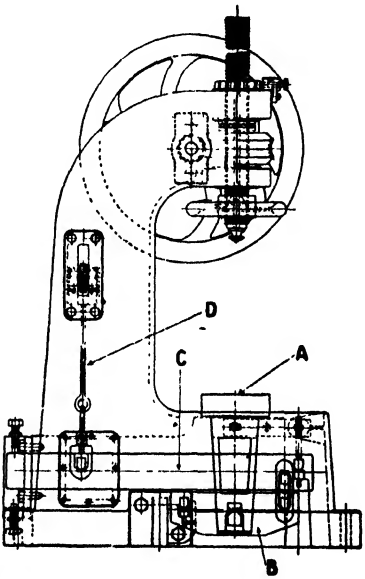

FIG. 128. PRINCIPLE OF AVERY BRINELL MACHINE

Precautions when Making Brinell Tests

In order to obtain consistent and accurate results from Brinell testing machines the following points should be observed—

(1) Select the proper size of ball and load to suit the material under test, as explained earlier in this chapter.

(2) See that the surface is sufficiently smooth and free from any defects or blemishes; this matter has been dealt with previously.

(3) Ensure that the surface under test is mounted at right angles to the axis of the ball indenter shaft or plunger.

(4) Read the diameter of the impression in two places at right angles.

(5) Occasionally turn the ball round in its chuck, to minimize errors due to minute distortion of the ball.

(6) Apply the load gradually and smoothly to its maximum value, holding it there for 15 secs.; for softer materials, when $P/D^2 = 10$, 5 or 1, allow 30 secs. Too rapid load application gives low hardness values.

(7) Observe that the surface under test is flat around the impression region. The B.S.I. stipulates that the width of the flat area shall be not less than twice the impression diameter *on either side of the* impression.

(8) The surface of the metal under test must be representative of the material, so that any scale, hard skin or other surface formation differing from the metal underneath should be removed; usually, the method of preparation of the surface for the Brinell test assures this condition.

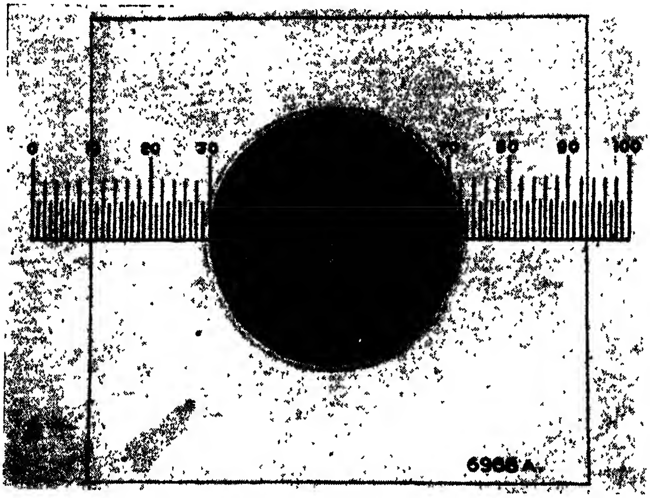

FIG. 129. METHOD OF READING DIAMETER OF BALL IMPRESSION, SHOWING GRATICULE SCALE (AVERY)

(9) Do not apply the ordinary Brinell test for thin materials or to surfaces exceeding 500 Brinell hardness.

(10) When recording the hardness number always state the ball diameter and load applied.

Direct-reading Brinell Testing Machines

As mentioned previously, after the impression has been made by the ball indenter the method of reading the diameter under the microscope may be dispensed with and instead the depth of the indentation employed; this depth is related to the diameter of the impression by the formula given on page 194. The depth is indicated, usually, by means of a dial indicator or type of comparator, reading in ten-thousandths of an inch. Alternatively, a projected enlarged image of the ball impression can be thrown on to a ground-glass screen having a suitable linear scale for direct readings of hardness, or—as in the Edgwick visual hardness tester—a pair of hardness reading limit lines for use when production testing. Fig. 130 illustrates the Edgwick machine which makes, measures and projects either Brinell ball or Vickers diamond impressions on to a screen. The impression is magnified 70 times. Loading, unloading, adjusting the head to the work and swinging back the indenter to bring the projection apparatus into operation are all effected by a single lever.

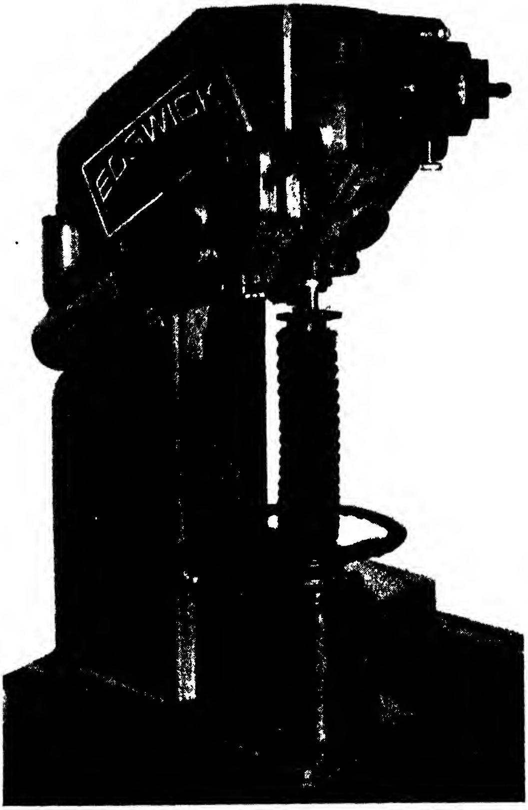

Fig. 130. The Edgwick Hardness Testing Machine

Spring loading is used; alteration in load is obtained by moving a finger-operated stop to the load indicated on the scale located on the side of the machine, i.e. on the opposite side to that shown in Fig. 130. The speed at which the load is applied is controlled by means of a screw which operates an oil brake.

In regard to the accuracy of measurement, for single tests the projected image is measured, the scale being graduated in tenths and hundredths of a millimetre. A micrometer gives readings to ten thousandths of a millimetre. The scale screen is rotatable so that the diagonals of a Vickers image can be measured.

The principal advantage of the direct-reading type of Brinell hardness tester is that of speed of checking, which is of much importance in production work. Thus, in the case of the Edgwick machine, previously referred to, as many as 600 tests an hour can be made on similar components.

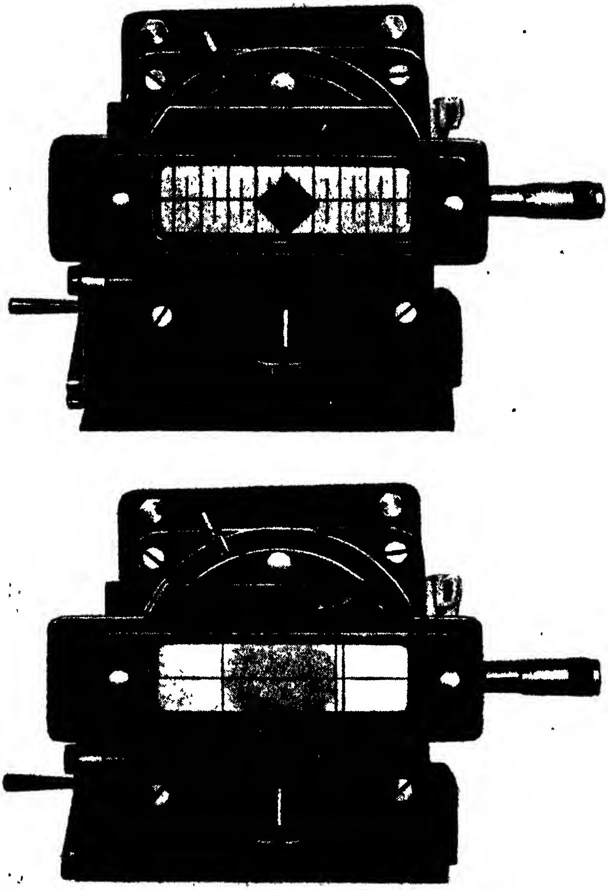

FIG. 131. ENLARGED IMPRESSIONS OF INDENTATIONS ON EDGWICK MACHINE

The principle of the Galileo direct hardness tester, made in Milan, is shown in Fig. 132. This machine is applicable to Brinell, Vickers, and Rockwell hardness tests, and is based upon the principle of lever magnification from dead weights, the load being applied by the "driving handle" shown; an oil brake or dashpot is fitted to ensure gradual load application at a rate that is capable of adjustment. The different loads required are obtained by turning a button provided for the purpose, the loads being indicated on a scale. The optical system for showing a magnified image of the depth of impression consists of a lever carrying a prism, lens and index screen and a fixed mirror above. The projection screen is arranged near the top front part of the machine.

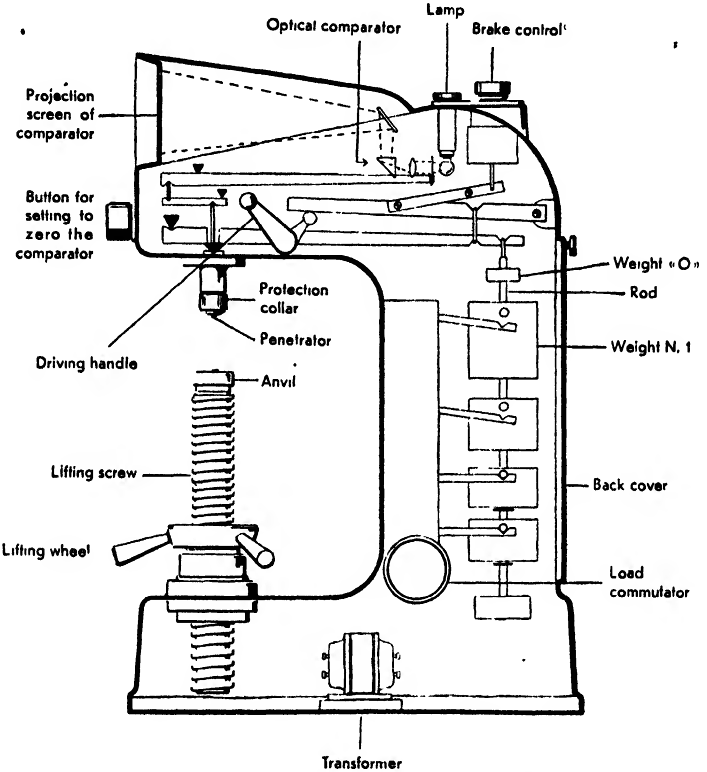

FIG. 132. THE GALILEO DIRECT-READING HARDNESS TESTING MACHINE

The Avery direct-reading hardness tester, shown in Fig. 133, covers the requirements for both ball and diamond indenters. It belongs to the dead weight lever magnifying class, and uses a mechanical (micrometer) type of mechanism for magnifying the depth of impression readings on the dial of the instrument.

Two standard forms of penetrator are used, one being a steel ball of $\frac{1}{16}$ in. diameter, and the other a diamond cone of 120° terminating in a spherical tip. Both major and minor loads are imposed by means of weights acting through a sensitive and accurate weighing lever fitted with hardened steel knife edges. Scales involving different loads and penetrators are in use but the most popular are those designated *B* and *C*. In each case, a minor load of 10 kg. (included in the total load) is applied when the specimen is brought into contact with the penetrator. For the *B* scale, a total load of 100 kg. is employed in conjunction with a ball penetrator of $\frac{1}{16}$ in. diameter. In the case of the *C* scale, the total load is 150 kg., and is used in conjunction with the diamond cone penetrator.

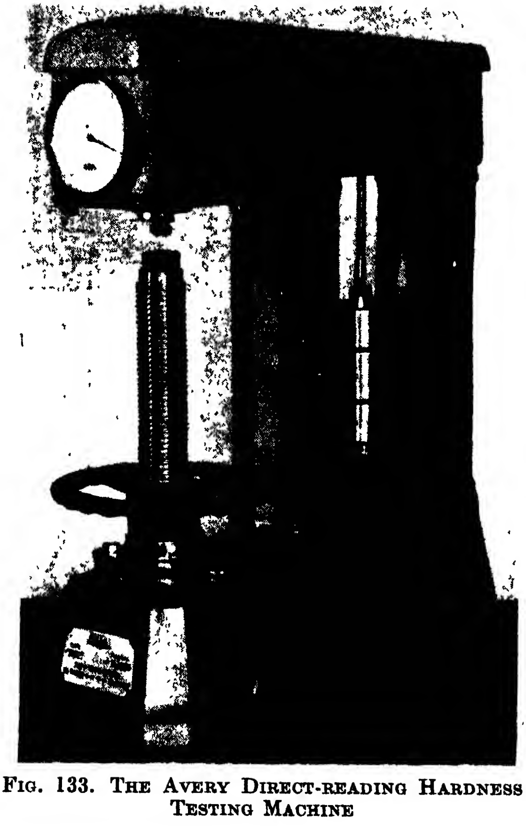

FIG. 133. THE AVERY DIRECT-READING HARDNESS TESTING MACHINE

These loads are applied by means of proportional weights which are suspended from the end of the weighing lever and are under the control of the operator. Provision is made for reducing the total load to 60 kg.

An oil dashpot device is fitted to control the rate of load application; this rate is adjustable by means of a control valve, to fine limits. The method of operation is as follows—

(1) Position the specimen upon the anvil. (2) Raise the specimen to contact with the penetrator by means of the screw hand wheel and continue to lift until the small subsidiary pointer on the gauge indicates "set." (3) The main pointer should indicate "set" before applying the major load. If adjustment is necessary turn the bezel of the indicator dial. (4) Push back the side lever to apply the proportional weights. The interval for the full application of the major load should not be more than one second. *Note.* The main pointer of the gauge moves in an anti-clockwise direction as the penetrator sinks into the specimen. (5) Raise the proportional weights by pulling forward the side lever. (6) The minor load still remains applied. Read the hardness numeral. Prefix the reading obtained by either *B* or *C*, signifying the scale used.


FIG. 134. THE OLSEN HYDRAULIC HARDNESS TESTING MACHINE WITH DEPTH INDICATOR ATTACHED

With this machine a single test can be made in about 10 secs. The scale *A* is used with the diamond cone loaded to 60 kg. for thin hardened steel strip and other extremely hard materials when small impressions are required. The scale *B* is used with a $\frac{1}{16}$ in. (1·588 mm.) steel ball and 100 kg. load for all mild and medium carbon steels, sheet steel and soft steel bars. The scale *C* is used with the diamond cone and 150 kg. load for hardened steels, hardened and tempered steel, alloy steels and materials harder than 100 Brinell. These scales, however, are not suitable for determining the hardnesses of very thin case produced by the nitriding or shallow case-hardening processes, etc.

The Vickers Diamond Pyramid Hardness Method

The method adopted in this hardness testing machine is one having several definite advantages over that of the Brinell one, whilst still embodying the principle of geometrical similarity of impression employed in the latter test. It is very flexible and, owing to the wide range of loads provided for, namely, from ½ kg. to 120 kg., can be used equally well for the softest and hardest of commercial metals; it is considered by many authorities to be the nearest approach to the ideal method of hardness testing by the indentation method.

The indenter is a 136° pyramidal diamond, so that it is usable over the whole range of material hardnesses, since the diamond is the hardest known substance; moreover, the adoption of the square base pyramid shape provides freedom from distortion under load.

In the case of the ball indentation method the ideal impression is obtained when the diameter of impression is 0·375 times the ball diameter. If pyramidal tangent planes are taken at the periphery of such an impression on a sphere of diameter equal to that of the ball, the pyramidal angle would be 136°.

In the Vickers method the impressions made are all pyramids of similar angle, and the diamond hardness numbers are obtained as follows—

$$\text{Vickers pyramid numeral (V.P.N.)} = \frac{\text{load, in kg.}}{\text{impressed area, in sq. mm.}}$$

If b = diagonal of square-shaped impression at surface and θ = angle between the opposite faces of pyramid, then

$$\text{Impressed area} = \frac{d^2}{2 \sin \frac{\theta}{2}} = \frac{d^2}{2 \sin 68^\circ} = \frac{d^2}{1{\cdot}85436}$$

Whereas with the Brinell ball method, the hardnesses on the Brinell scale are not in linear proportionality to the Brinell numbers, on the Vickers hardness scale the numbers and hardnesses are in strict linear relationship over the complete scale. This is clearly shown by the results given in Fig. 135, and is a direct consequence of the application of the geometrical similarity of impression principle and the method of expressing the hardness numbers by the ratio of load to impression area.

Another important advantage that follows from the principle of the method employed is that the V.P. Numbers are independent of the loads applied; this is shown by the results of tests upon various steels over a hardness scale range from about 150 to 830, shown in Fig. 136; in all instances homogeneous materials were used for the tests.

Whilst the principle of the Vickers method has been established, it should be pointed out that accurate results can only be obtained from machines designed to apply the loads smoothly, at the proper rate and

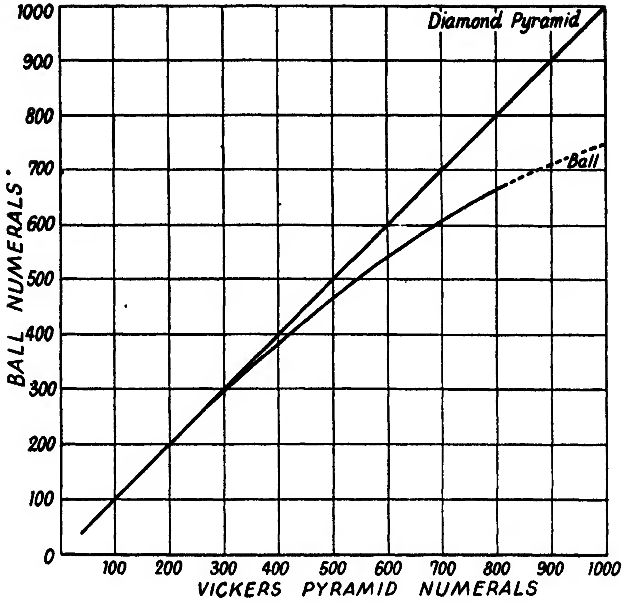

FIG. 135

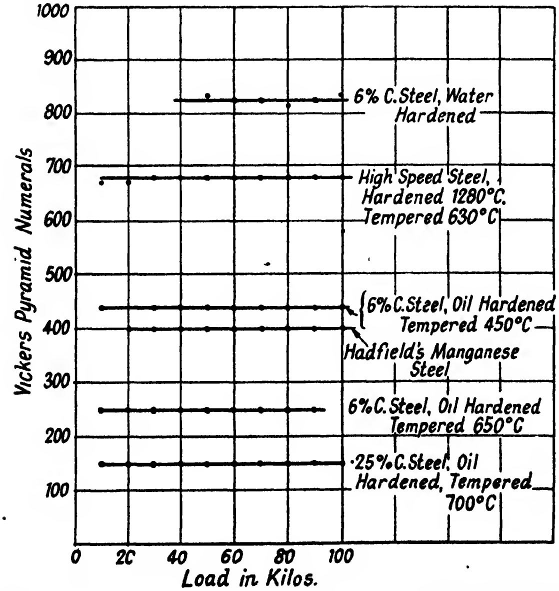

FIG. 136. SHOWING HOW THE VICKERS HARDNESS NUMERALS ARE INDEPENDENT OF LOAD

with maximum load accuracy. In the Vickers machine the method of loading with calibrated dead weights through a simple lever system is employed, the system being controlled and buffered to avoid load shocks; moreover, the load is applied automatically, maintained for the 15 sec. period and released in such a manner that errors in loading are avoided.

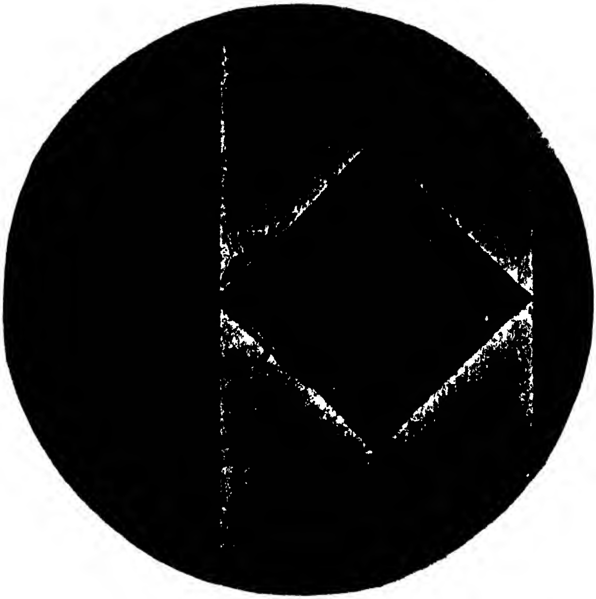

FIG. 137. TYPICAL IMPRESSION MADE BY THE VICKERS DIAMOND PYRAMID

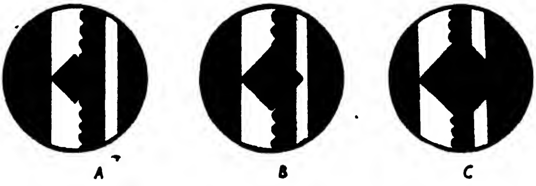

FIG. 138. ILLUSTRATING USE OF THIRD KNIFE EDGE FOR HARDNESS LIMIT VALUES

A = Material too hard. *B* = Material hardness within the two limits. *C* = Material too soft.

The surface impression (Fig. 137) is clearly defined and measurement of the diagonal distance, between the adjustable knife-edges—as seen in the field of the microscope—is taken from a digit counter operated by the knife edge mechanism, to an accuracy of 0·001 mm. It is recommended that both diagonals should be measured and the mean value taken.

For production test purposes a third knife edge, located between the other two, can be set to the allowable upper hardness limit, so that it can readily be seen whether a test specimen is too hard or too soft without actually taking diagonal readings. The principle of this method is shown in Fig. 138.

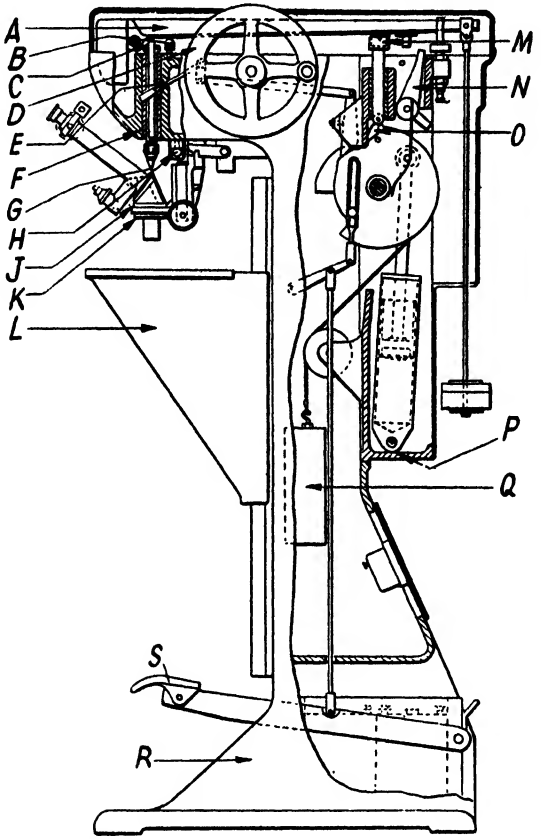

FIG. 139. GENERAL ARRANGEMENT OF VICKERS HARDNESS TESTING MACHINE

Fig. 139 illustrates the general lay-out of the Vickers hardness testing machine. It comprises a main frame *F*, housing the load application mechanism and carrying the stage *L*, and a single load lever of 20 times magnification. This applies the load through a thrust rod *C* to a tubular member *F* having freedom to move vertically in its guide and carrying at its lower end the diamond indenter *G*. A smaller frame *P* is attached to the main frame; this carries the control mechanism. The rotating cam *O* is provided for the purpose of applying and releasing the load;

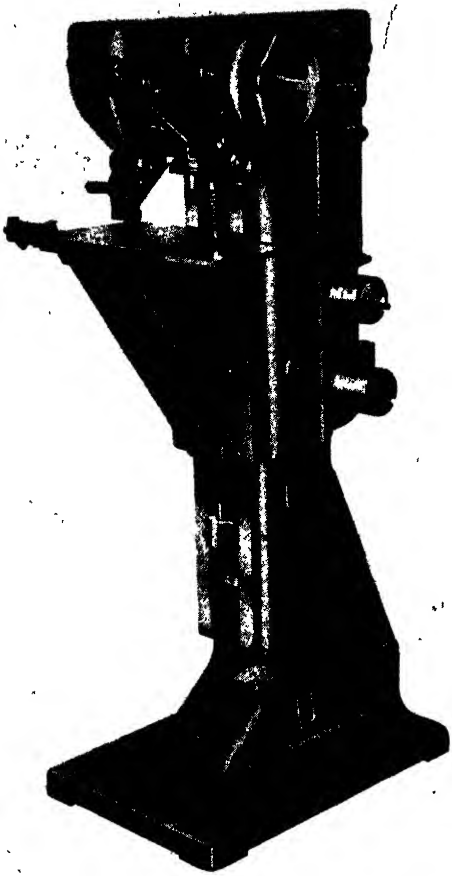

FIG. 140. THE VICKERS HARDNESS TESTING MACHINE

it actuates the plunger *M*, causing it to move vertically up or down in its guide. The cam is mounted on a drum and when the starting handle *E* is depressed the unit is rotated by a weight *Q* which is held by a flexible wire. The speed of rotation is controlled by a piston and dashpot device, the rate of displacement of the oil being regulated by an adjustable control valve. The plunger has a spring pad at its upper end which engages with a cone mounted in the beam; this device assures a slow and diminishing rate of application for the last portion of the load. As the cam both raises and lowers the plunger both the uniformity of the loading and duration of load are assured, whilst errors due to inertia and too-early load removal are avoided. The foot pedal *S* is for the purpose of returning the cam, drum and weight to their original positions. The beam is supported by means of a tripping piece *N* during the movement of the foot pedal; it falls out as soon as the plunger arrives at its top position.

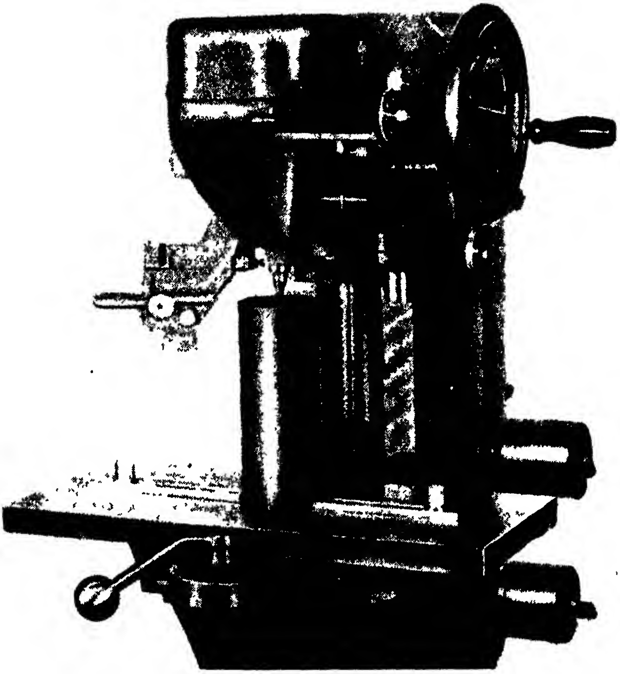

FIG. 141. MACHINE IN POSITION FOR MAKING INDENTATION ON END OF SPECIMEN CYLINDER, SHOWN ON TABLE

Complete working instructions are given in a booklet issued by the manufacturers of the Vickers machine.

In regard to the V.P. Numerals, as shown in Fig. 135 these agree with the Brinell numbers for hardness up to 300, but above this value the former numerals become progressively greater.

When used *for testing the hardness of thin metals* there is a limiting thickness permissible for each load and hardness value so that the metal tested should not be thinner than the limiting value for these conditions. In this connection the curves shown in Fig. 143 have been prepared to show the minimum allowable thicknesses for the loads and hardnesses stated on the curves; these values are based on the B.S.I. recommendation that the thickness of the test piece shall be equal to at least 1½ times the diagonal of the impression.

The values given in Table 34 were obtained in the case of some typical hard steels tested by the Vickers diamond pyramid method.

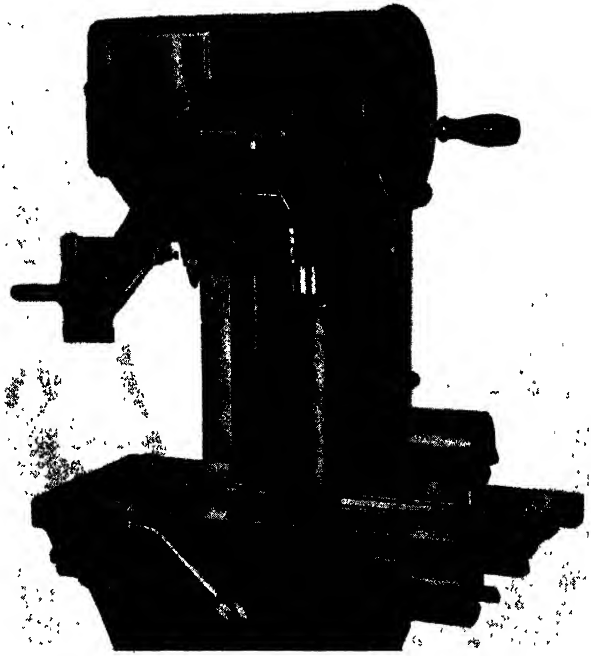

FIG. 142. SHOWING IMPRESSION MEASURING MICROSCOPE MOVED INTO POSITION OVER SPECIMEN

In connection with these values it may be mentioned that steels and other materials above 650 on the V.P.N. scale are regarded as "glass hard." Further, the value 760 to 860 is now accepted as a safe specification for most high-speed and many carbon steel tools; as a general rule high-speed steel below 740 V.P.N. is unsuitable for cutting purposes.

The Firth Hardometer

This machine offers certain advantages over the Brinell type. It uses spring loading and thus obviates any errors due to unequal load application and inertia troubles, whilst a tripping device avoids any risk of overloading. It can be used equally well for ball or 136° pyramidal diamond indenters; it has a higher powered microscope than in most Brinell machines, and gives greater accuracy in reading. The design and control of the machine are such that on repetition work

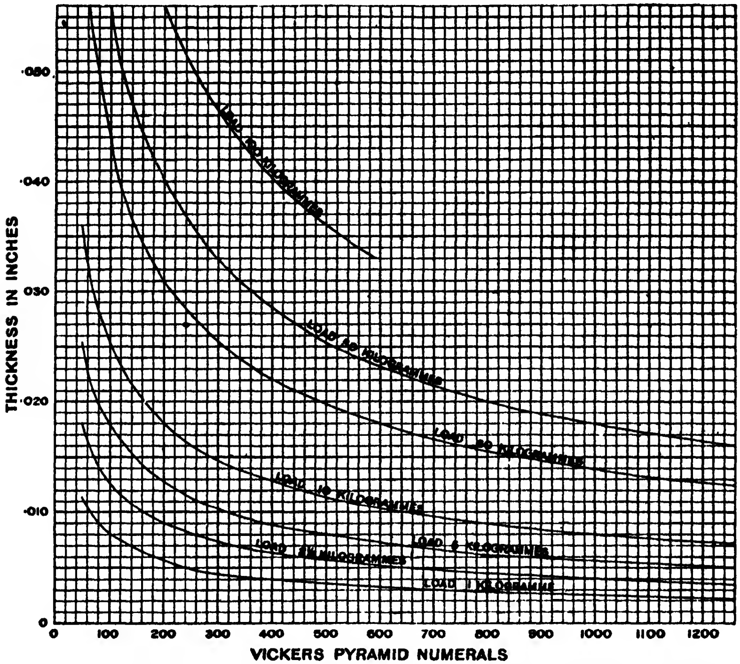

Fig. 143. Limiting Thicknesses of Metals for Vickers Hardness Machine Tests

TABLE 34

Diamond Hardnesses of Typical Hard Steels

Description	Vickers Pyramid Numeral
"Glass hard" steel (bottom limit) about	650 upwards
Razor blades	600 to 700
High-speed steel hardened as for drills	760 to 860
Tool steel hardened for cutting purposes	850 to 1000
Case-hardened mild steel	860 to 1000
Case-hardened nickel steel, 3 per cent	750 to 890
Case-hardened nickel steel, 5 per cent	720 to 860
Balls as used in the Brinell test	900 to 1000
Razor blades (Gillette)	780 to 840
Files of various makes and sizes	760 to 942

readings can be taken at the rate of 120 per hour, by semi-skilled operators.

The Hardometer is available in three different standard types, as follows—

(1) Fixed load machine with either 120 kg. or 30 kg. load cylinders

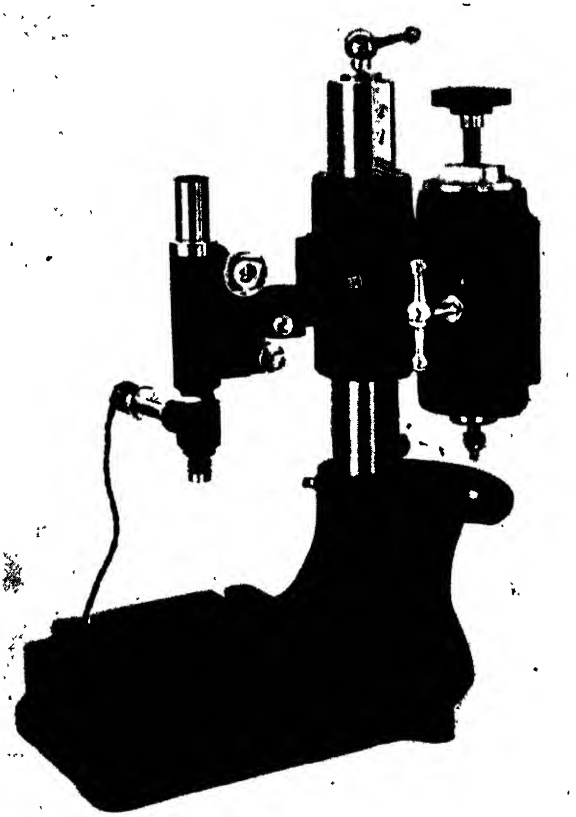

FIG. 144. THE FIRTH HARDOMETER (FIXED LOAD TYPE)

(2) Fixed load machine with 10 kg. load cylinder.

(3) Variable load machine with adjustable load from 2 to 40 kg. With this latter machine a large dial with needle is arranged on the front, to indicate the loads. The latter can therefore be selected to suit the thicknesses or nature of the metal. In this connection, the Aeronautical Inspection Directorate recommended a 40 kg. load and 2 mm. ball for testing high strength aluminium alloys.

The 120 kg. machine is used on all but thin sections and where repetition tests are to be carried out. The 30 kg. machine is used for thinner sections and for steels surface-hardened either by case-carburizing or nitriding, the hardened layer being not less than 0·016 in. in thickness. The 10 kg. machine is used for diamond indenter tests on still thinner sections or on steel parts with a relatively thin carburized case, not less than 0·009 to 0·0095 in., and on nitrided surfaces not less than 0·008 to 0·011 in. thick. It can also be used with a 1 mm. ball indenter for testing aluminium alloys and copper alloys.

In regard to the construction of the Hardometer the machine is provided with a sliding head which is readily adjustable by means of a rack and pinion to accommodate objects of different sizes. The load is applied through a specially calibrated spring and patented trip mechanism in such a manner that only the exact load can be applied, the whole of the mechanism being entirely enclosed and protected from dirt or damage.

A trip device automatically arrests the motion of the hand wheel as soon as the correct load has been applied. Reference to Fig. 145 will show that when the load cylinder is forced down by means of the hand wheel and screw (carrying with it the trigger *M*) the trigger engages a recess in the inner bushing, which immediately allows the stop *L* to engage the ratchet wheel *K* and effectively prevents screwing the hand wheel too far. The hand wheel used for applying the load should not be rotated at a higher rate than one turn in 2 or 3 secs.

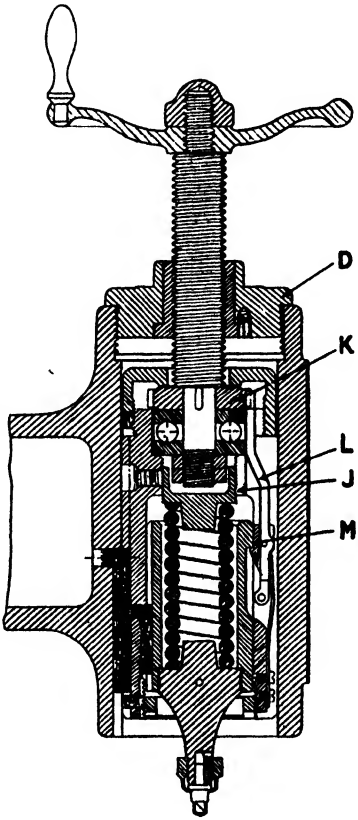

FIG. 145. FIRTH HARDOMETER TRIP DEVICE

After the impression has been made the column carrying the indenter is swung away from the specimen, the latter being left in position on the table. The arm carrying the microscope is at the same time swung into position, thus taking the place of the indenter. The microscope is finally adjusted by means of two thumb-screws until the impression is located exactly beneath the scale, as viewed through the eyepiece, and its diameter read. Fig. 146 shows the field of view, the ball impression diameter being 3·2 divisions, corresponding to a Brinell number of 363. When using a $\frac{1}{4}$ in. microscope objective the value of the division marked X in Fig. 146 is 0·05 mm.; with a 1 in. objective it is 0·20 mm.

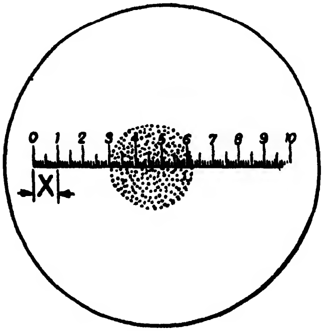

FIG. 146. MEASURING BALL IMPRESSION DIAMETER

Using the Brinell Microscope

It is important in the case of Brinell microscopes fitted with micrometer scales similar to that shown in Fig. 146 first to focus the scale clearly by the means provided; the eyepiece sliding tube method is usually employed for this purpose. Afterwards, the complete unit (eyepiece and objective) can be focused on to the impression (ball or diamond), when the micrometer scale will be seen clearly in focus superposed over the impression.

Measuring Pyramidal Diamond Impressions

When measuring the pyramidal diamond impression, the view as at first seen is that shown in Fig. 147 (A). The microscope, in this case, is fitted with a geared micrometer eyepiece giving a reading accuracy of 0·001 mm. The eyepiece has one fixed and one movable knife edge and the square-like impression is moved until one corner just touches the fixed knife edge on the left. The movable knife edge is then adjusted to touch the opposite corner, as indicated in Fig. 147 (B). The diagonal distance is then read off a Veeder type counter fixed to the eyepiece. This method is used on the Firth variable load machine.

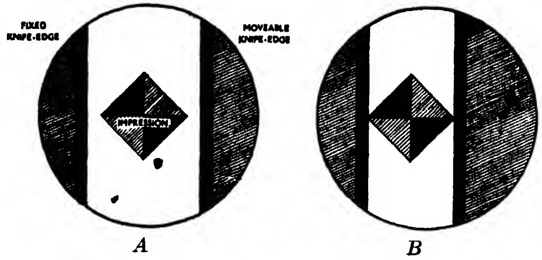

FIG. 147. MEASURING PYRAMIDAL DIAMOND IMPRESSION

For repetition purposes on a large number of similar test pieces a special micro-projection head is used. This throws a magnified image of the diamond impression on to a hooded screen situated in front of the operator. The sizes of the two diagonals can then be read off the two scales provided. In the example shown in Fig. 148 the reading is 2·80 divisions, which is equivalent to a diamond hardness of 710 for the load used.

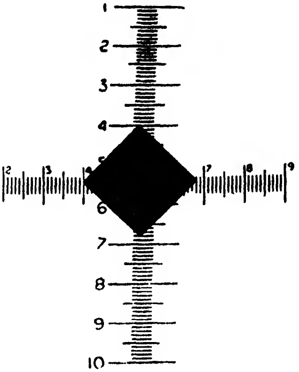

Fig. 148. Measuring Impression by means of Two Scales

Types of Indenter Holders

The method of holding the different types of 1 mm., 2 mm., and 4 mm. ball indenters and the diamond indenter on the Hardometer machine is illustrated in Fig. 149. The 2 mm. and 4 mm. balls are held in place on the load spindle by means of a small pad piece and a knurled threaded cap which screws on to the threaded spindle end. The diamond indenter is held in an adapter which is fixed to the spindle end by a similar threaded cap. In the case of the 1 mm. ball this is located by a film of grease in the hemispherical cup of the pad piece shown.

The Rockwell Hardness Tester

The Rockwell machine is widely used in the United States and to some extent in this and other countries for hardness tests over a wide range of material hardnesses. It is employed for both ball and diamond indenter tests, and gives direct hardness readings on a large dial provided with two scales as follows—

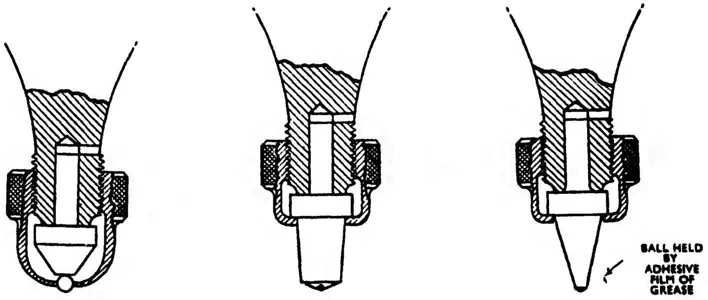

2 mm. and 4 mm. Ball Indenters. **Diamond Indenter.** **1 mm. Ball Indenter.**

Fig. 149. Types of Indenter Holders

Scale B is employed for tests on unhardened steels, phosphor bronze, brass, aluminium and magnesium light alloys, cast iron, etc.

For readings on this scale a $\frac{1}{16}$ in. diameter steel ball is used with a 100 kg. major load. For very soft metals $\frac{1}{8}$, $\frac{1}{4}$, and $\frac{1}{2}$ in. balls, fitted in special chucks, are supplied.

Scale C is employed with a 120° cone angle diamond indenter with a major load of 150 kg. It is applicable to tests on the harder metals, such as hardened steels or hard alloys.

The scale ranges on the dial for both *B* and *C*, marked with red and black lettering, respectively, are from 0 to 100, but the useful part of the *C* scale is only from about 40 to 68, corresponding to the B.S.I. diamond pyramid scale of 410 to 1000, so that it is necessarily somewhat "compressed." There is also a Rockwell scale *A* for use with a diamond cone and 60 kg. load, for the hardest materials. Its readings range from 43 to 91 (adopted values by the B.S.I.), corresponding to diamond pyramid scales of 100 to 1400.

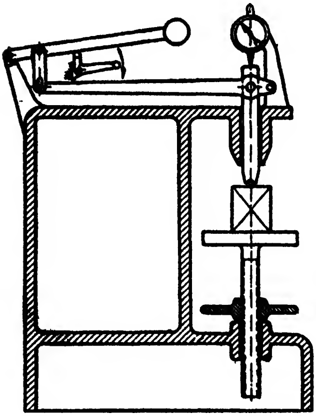

FIG. 150. PRINCIPLE OF ROCKWELL HARDNESS TESTING MACHINE

The Rockwell method of hardness testing differs from the single static load tests of the Brinell and diamond pyramid machines in that *it first applies an initial load of* 10 *kg. to the indenter*, in order to eliminate errors in the depth measurement due to spring of the machine frame or settling down of the specimen and table attachments (Fig. 151). After this load is applied the clock indicator is set to read zero. The 100 kg. load for the *B* scale, or 150 kg. one for the *C* scale, as the case may be, is then applied and the hardness reading taken direct from the scale. This avoidance of the necessity of measuring the actual indenter impression greatly speeds up the process of hardness testing, making it possible to obtain hardness readings on repetition work up to 250 an hour; the rate of load application is controlled by an oil dashpot.

This method of test is well suited to finished or machine parts of simple shape. The available models of Rockwell machines, however, cover a wide range of applications and include those for testing inside cylindrical surfaces, outside cylindrical surfaces, thin strip metal, wire, safety razor blades, etc.

The principle of the Rockwell machine is illustrated in Fig. 150.* Later models employ a lever magnification system with jockey weights (not shown) attached to the weighing arm on the left; the earlier models used the weighted lever system shown in Fig. 150. The depth

---

* Courtesy C.A.V., Ltd.

of the impression is measured by the clock dial shown above in Fig. 150. Provision is made for moving the table, carrying the specimen under test, to any vertical position within its range, by means of a capstan screw.

The Rockwell "R" model shown in Fig. 152 is made for toolroom use and has an 8 in. gap and 8 in. diameter work table. The loading weights for the lever system of load application are shown on the extreme left and the oil dashpot in about the centre of the lever arm.

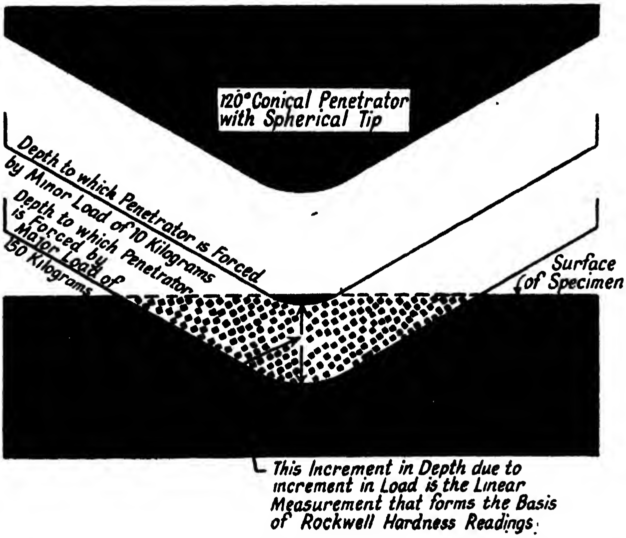

FIG. 151. ILLUSTRATING PRINCIPLE OF ROCKWELL HARDNESS TESTER

The method of making a Rockwell hardness test consists in first placing the test specimen upon the special anvil or work table, afterwards turning the capstan wheel to elevate the work into contact with the indenter point. The turning is continued, forcing the work against the penetrator until the small offset index on the dial shows that the minor load is applied. Next, the bezel ring of the gauge is turned until the zero of the scale is right behind the pointer. A horizontal lever or crank handle immediately to the right of the dial unit is then pushed back about an inch to apply the major load. When the pointer comes to rest the handle is at once pulled forward. This releases the major, but not the minor, load. The Rockwell hardness can then be read off the dial, on the appropriate scale.

In regard to the depth of the impression for a given load and hardness value, this is appreciably smaller than that of the Brinell method. An increment of depth due to increment of load is 0·00008 in. for each point of hardness on the Rockwell scale. If a hard steel has a Rockwell *C* number of 58 at one point and *C* 55 at another point this means that the depth of penetration is three times 0·00008 in., or 0·00024 in., deeper at the softer spot.

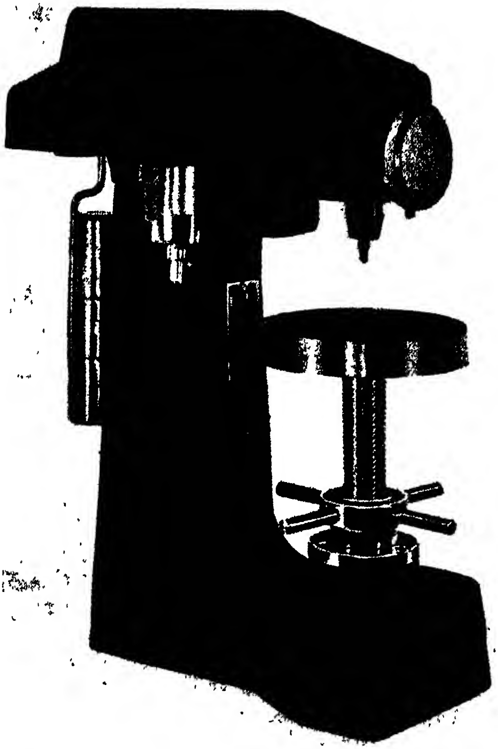

FIG. 152. THE ROCKWELL TYPE "R" HARDNESS TESTING MACHINE

For testing cylindrical objects a vee-type anvil is used. It has been shown that in all but soft materials there is no practical difference in the readings on flat bar and on cylinders of 1 in. diameter. It is advisable, however, to specify the diameter of the test piece in expressing the hardness test results.

When thin metal is to be tested it is necessary that the specimen is well supported by the flat face of the anvil. If, however, the metal is, say, thin or soft enough to register a compression mark or cause *a protrusion on its reverse side,* unreliable readings will occur. In the absence of such marks it is considered that the Rockwell gauge readings are sufficiently accurate. A special machine, known as the Rockwell

Superficial type, is supplied for testing thin metals, such as safety razor blades, thin brass and steel strip or sheet. With this machine every hardness test is based upon a depth of impression of less than 0·005 in. In hard steel this impression is usually about 0·001 in. The machine employs a higher magnification system than that of the standard models, in order to obtain comparative sensitivities. A different scale is employed, namely, the Rockwell *N* or *T* scale for diamond or ball indenter, the load in kg. being expressed on each scale. Suitable conversion charts are available for transferring the readings to Rockwell *B* or *C* scales.

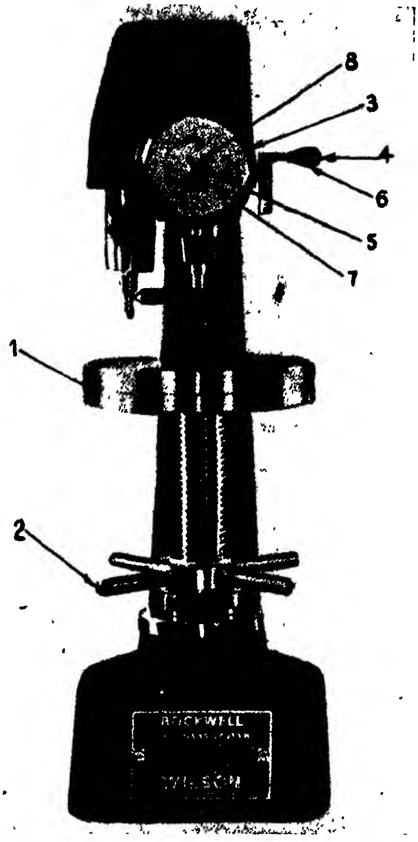

Fig. 153. Illustrating Components of Rockwell Machine used in making a Hardness Test

1 = Testing or work table. 2 = Table-raising wheel. 3 = Bezel to rotate dial. 4 and 6 = Operating handle. 5 = Movable pointer on dial. 7 = Rockwell hardness reading on dial. 8 = Minor load indicator on dial.

Notes on the Rockwell Method

The principal advantages of the Rockwell method may be summarized as follows: (1) Much smaller permanent indentation than the Brinell test. (2) Greater latitude from soft to hard materials. (3) Use of initial load to avoid surface, machine, and table errors. (4) Comparative rapidity of tests owing chiefly to use of direct reading hardness gauge.

Disadvantages are:—(1) The use of a much more contracted scale range than that of the Brinell or diamond pyramid. (2) The possibility of errors due to grit or scale getting between the work and anvil. (3) Errors that may be caused by large or overhung work. (4) The use of two separate scales. (5) Difficulty of readily converting readings into Brinell or pyramidal diamond scales. The latter difficulty has more recently been overcome by the publication by the B.S.I. of a Table of Approximate Comparison of Hardness Scales,* showing the comparison numbers over the complete ranges of the diamond pyramid, Brinell and Rockwell scales. These are reproduced in Appendix No. II.

Testing Plastic Materials

Materials such as lead, vulcanized fibre, hard rubber or synthetic resins (plastics) can be tested on Rockwell machines, but special large ball penetrators must be used to obviate the "flow" effect. Usually ¼ in. or ½ in. balls with maximum loads of 60 kg. or 100 kg. are recommended for such materials, with a maximum load application duration of 8 to 10 secs.

Internal Tests on Rockwell Machine

For testing the hardness of internal parts, such as that of bores in metal or hollow cylinders, ring gauges and similar components, a special goose neck adapter is provided. This has a cranked portion, a standard spindle to fit the plunger unit, and, at its lower end, the penetrator.

The Shore Scleroscope Method

The principle here employed is the rebound one, in which a small diamond-tipped drop hammer is raised vertically within a glass tube by means of suction produced by a rubber bulb and tubing, the bulb being squeezed to raise the hammer. The hammer is then held by automatic means at a height of 10 in. above the surface to be tested. In the earlier models the release of the hammer was effected by means of a trip lever, but in the later ones the release is obtained by pressing the hand bulb a second time. The height of rebound of the hammer,

---

* B.S.I. Specification No. 860, 1939.

after striking the surface, is then observed on the vertical scale at the rear face of the glass tube.

The scale is graduated into 140 equal divisions and is such that the 100 division on it represents the average hardness of martensitic high carbon steel (as quenched). The small cylindrical hammer measures $\frac{1}{4}$ in. in diameter by $\frac{3}{4}$ in. long and weighs $\frac{1}{12}$ oz. The shape of the diamond indenter is slightly spherical and blunt; it is approximately 0·020 in. in diameter. It has been estimated that the intensity of the blow produced by this hammer is equivalent to about 500,000 lb. per sq. in., and since the energy of fall is constant the hardness is taken as proportional to the rebound height. Thus, for an average steel of 80 scleroscope hardness 20 per cent of the hammer energy of fall is absorbed in indenting the metal, whereas in the case of lead of hardness 5, 95 per cent of the energy is used up in penetrating the metal.

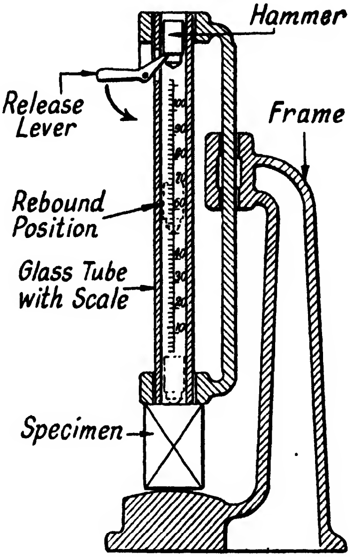

FIG. 154. PRINCIPLE OF SHORE SCLEROSCOPE

With the vertical glass tube model some difficulty may be experienced by operators not specially trained in rapid observations of rebound levels, and it is now possible to employ a standard recording model of the Shore scleroscope. This has a dial of ample proportions at the head of the instrument and the needle records, on the Shore scale, the height of the rebound. A knurled knob is provided on the side of the machine for the purpose of raising and releasing the hammer; the latter is comparatively long and heavier than the other type, referred to previously. It develops the same striking force with a drop of only $\frac{3}{4}$ in. The needle, after the rebound has occurred, remains fixed in the correct reading position.

This machine can be used for tests on highly hardened steel, on thin pieces, such as safety razor blades (down to 0·005 in. thick), cold rolled brass and steel (0·010 in. thick), annealed sheets (0·015 in. thick), on case-hardened steel (0·01 to 0·015 in. thickness of case), on very soft metals and large metal parts.

The principal advantages of this machine are that it is portable and can therefore be taken to the work to be tested, it is rapid in operation, for about 1000 tests per hour can be made with the dial-type machine, and it leaves only a very small impression on the specimen.

It requires to be set up accurately, both in the vertical sense and at right angles to the surface of the specimen; otherwise the hammer will be restrained in its rebound and give too low a reading. Another important requirement is that the specimen and anvil below must be in firm contact, especially in the case of thin parts. Unless this precaution is observed part of the hammer's energy will be absorbed by the yielding of the specimen and its support, and too low a reading will result.

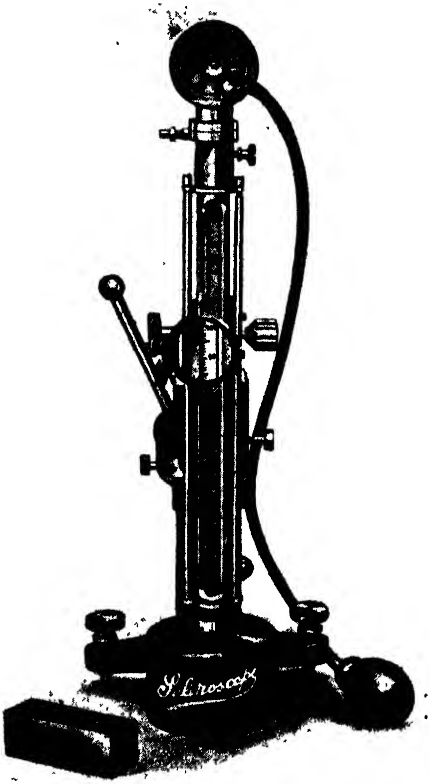

FIG. 155. THE SHORE SCLEROSCOPE

Another precaution is to avoid the presence of grease or oil between the anvil and specimen. The somewhat limited range of the scale compared with the Brinell or pyramidal diamond ones renders it more difficult to observe hardness differences between metals of a similar class.

In the case of the direct rebound instrument the height of the hammer is not always easy to observe, special care being necessary in making tests.

The readings of the Shore scleroscope scale require conversion to the Brinell one, for comparison purposes. In this connection there is an approximate relationship, since the Brinell values are about 6 times the Shore ones, although for soft steels it appears to be rather less, namely, 5½ times, and for hardnesses over 700 Brinell, higher, namely up to 8 times.

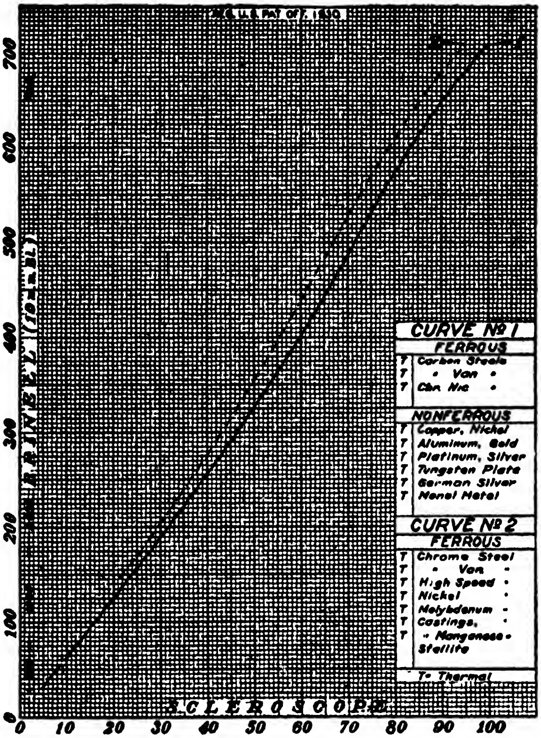

FIG. 156. BRINELL AND SCLEROSCOPE HARDNESS OF METALS

The manufacturers have provided conversion scales for metals that have not been heat-treated or cold-worked and also for those that have been heat-treated and cold-worked. Fig. 156 illustrates the Brinell conversion scales for the former class. It will be observed that for approximate purposes a linear relationship may be assumed, but for more accurate results the values on the graphs should be taken.

Some typical Shore values are given in Table 35 for various metals ranging from the softest to the hardest types.

TABLE 35

SHORE HARDNESS VALUES OF METALS

Name of Metal	Annealed or Cast	Cold Worked	Heat-treated
Lead	2–4	3–7	—
Gold, 24–14 carat	5–25	24–70	—
Silver	6½–14	20–37	—
Copper	6–8	14–40	—
Zinc	8–10	18–20	—
Babbitt metal	4–9	—	—
Tin	8–9	12–14	—
Bismuth	8–9	—	—
Brass	7–35	20–45	—
Platinum	10–15	17–30	—
Bronze, phosphor	12–21	25–40	—
Bronze, manganese	16–21	25–40	—
Iron, wrought, pure	16–18	25–30	—
Nickel, wrought	17–19	35–40	—
Mild steel, 0·05–0·15 carbon	18–25	30–40	—
Iron, grey, sand-cast	25–45	—	—
Iron, grey, chilled	—	—	50–90
Steel, tool, 1 per cent carbon	30–35	40–50	90–110
Steel, tool, 1·65 per cent carbon	38–45	—	90–110
Steel, vanadium	30–50	40–60	50–110
Steel, chrome-nickel	35–50	40–60	60–105
Steel, nickel	25–30	35–45	50–90
Steel, high-speed	30–45	40–60	70–105

The Herbert Pendulum Hardness Tester

A useful instrument for works testing of hardness is that known as the Herbert tester (Fig. 157). It measures the work-hardening properties of metals, on which their resistance to working depends chiefly.

The tester consists of a weight of 4 kg. resting on a steel ball 1 mm. diameter (or a ball-shaped diamond 1 mm. to 10 mm. diameter), and constituting a compound pendulum one-tenth of a millimetre in length.

Immediately above the ball is a graduated weight mounted on a screw. By raising or lowering this weight the centre of gravity of the instrument can be brought to a predetermined distance below the centre of the ball. Above this is a curved spirit level and a scale, reading to 100.

The principle upon which this instrument works is that of allowing the pendulum with its steel ball or diamond to rest on the specimen, so as to make an indentation. The pendulum is then caused to oscillate through a small arc, and its time of swing is measured with a stop-watch. The number expressing the time of 10 single swings is taken as the measure of the hardness.*

---

* E. G. Herbert, "The Work Hardening of Steels by Abrasion," *Journ. Iron and Steel Inst.*, 1927.

Fig. 157. The Herbert Pendulum Tester shown Making Hardness Test on a Gear Wheel

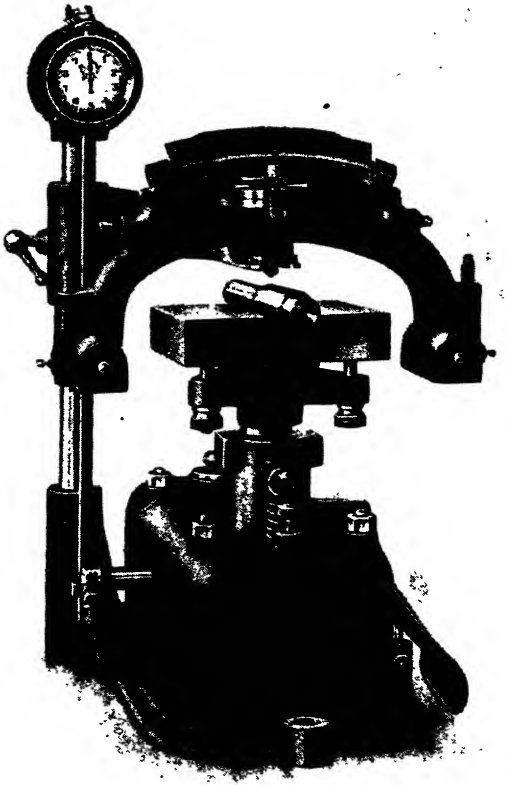

Fig. 158. The Herbert Pendulum Stand and Stop-watch Operating Device

Fig. 157 illustrates the Herbert hardness tester in use, and it shows also a useful universal ball vice that can be employed for holding specimens to be tested; in the example a gear wheel is shown under test.

Fig. 158 shows the more elaborate pendulum stand with stop-watch that is started automatically when the pendulum is set swinging.

Fig. 159 shows a photo-micrograph of the impression (magnified 50 times) made by a normal time test on annealed carbon steel.

FIG. 159. MAGNIFIED PHOTOGRAPH OF IMPRESSION MADE BY NORMAL TIME TEST ON ANNEALED CARBON STEEL. (MAG. 50 TIMES)

The stand shown in Fig. 158 enables mass inspection testing to be carried out very quickly, for the operation is mechanical and controlled by one handle. With fixed "high" and "low" limits 5 or 6 tests per min. can be made, taking the time of one swing, in the case of hardened steel; in such cases a ball-shaped diamond should be used.

The advantages of this method of testing are that it is quicker, easier for the operator, and does not necessitate making readings with a microscope of the impression. The indentation made is extremely small and does not damage small specimens or surfaces as with the Brinell test. On hardened steels the time-hardness number is equal to about one-tenth the corresponding Brinell number; other constants can be obtained for softer metals.

The Herbert tester has a higher useful range than the Brinell method, as it is not subjected to the ball distortion for hardnesses above 500 of the Brinell system.

The pendulum swing method can be applied to other materials than metals, e.g. ebonite, mica, Bakelite, celluloid.

The following time hardness numbers (seconds for 10 single swings) were obtained with a 1 mm. steel ball—

Glass	100	Mild steel	20
Very hard carbon steel	75	Rolled brass	15
Hard carbon steel	65	Cast brass (soft)	11
Heat-treated alloy steel	52	Lead	3
Annealed high-speed steel	26		

The pendulum tester can also be used to measure the work-hardening properties of metals. The method employed is first to find the *time hardness* in the ordinary manner as described; then to work-harden the specimen by rolling it with the pendulum. After this a second time hardness test is made on the rolled surface. The process of alternately rolling and testing is continued until the hardness reaches a maximum, and then declines.

The hardness of metal machining chips can be explored by the pendulum test method as shown by the results given in Fig. 160 for a stainless steel turning obtained in the lathe. The hardness numbers are indicated at several parts of the chip, and the results show that the hardness caused by the cutting edge of the tool is nearly twice that of the original bar metal; this resistance of metals to machining depends upon their work-hardening capacity.

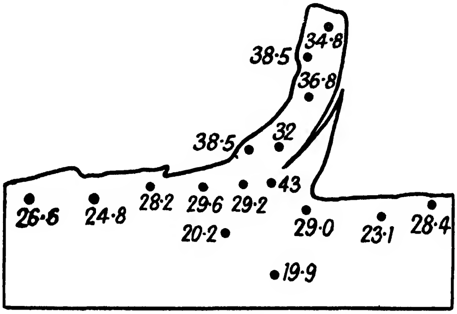

FIG. 160. HARDNESS OF METAL MACHINING CHIP

The following are representative time work-hardening results—

	Original Time Hardness						
Passes of ball . .	0	2	4	6	8	10	12
Hard tool steel .	71	89	88	86	—	—	—
Manganese steel .	21	45·5	52·4	54	56·2	57·2	44·6
Mild steel . .	21	30	30·8	30·9	31·2	32·3	31·6
Stainless steel . .	18	38·7	41·9	43·1	43·1	44·0	43·8
Loco tyre . .	28·6	35	36·2	36·0	—	—	—
Deep drawing steel .	12	19·4	20·7	20·6	—	—	—

These figures, like all "time test" figures, can be converted to Brinell numbers. Thus the maximum value deduced for manganese steel was 57·2 (572 Brinell),; stainless steel 44 (440 Brinell); mild steel 32·3 (323 Brinell); drawing steel 20·7 (154 Brinell). The hardness induced by the pendulum would be induced in actual service by abrasion, or by cutting tools.

The pendulum tester can also be used for measuring hardnesses of steels while actually in an electric furnace, so that curves or tables of temperatures and hardnesses can be obtained.

Fig. 161 is a typical example of hot-hardness curves relating to "Rapidor" and other comparable saw blades. The corresponding approximate Brinell numbers are obtained by multiplying the "diamond time hardness" values by 13·5 or steel ball hardness by 10.

The special apparatus used for hot-hardness tests consists of a vertical type electric furnace which just allows the upper end face of the specimen to be exposed for making the pendulum hardness test.

Testing Hardness by Cloudburst Method

The ordinary indentation methods give the hardness at one particular spot, but do not yield any information concerning the hardness of the rest of the surface of the part tested; a series of indentation tests might, however, ruin the surface. In view of the known fact that heat-treatment methods sometimes leave parts of steel articles softer than other parts, it is desirable to know whether such "soft spots" exist.

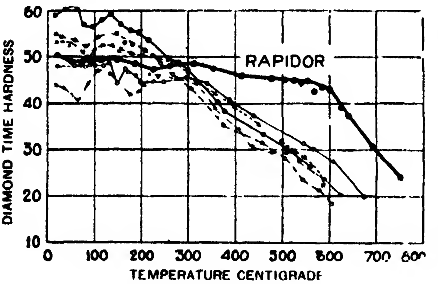

Fig. 161. Showing Relation between Hardness and Temperature of Saw-blade Steel

The "Cloudburst" method of ascertaining the hardness of relatively large areas (up to 1 ft. sq.) consists in dropping, from a predetermined height, a shower of hard steel balls on to the surface, the shower being arranged to cover the whole surface.

If the height of fall is adjusted to the specified hardness required, then the presence of any softer places is revealed by slight indentation roughness, that can readily be discerned.

Fig. 162 and Fig. 163 illustrate the 8 in. machine that can deal with surfaces 8 in. sq. The machine consists essentially of a rubber-lined chamber in which the work is placed, a chimney down which the balls drop on to the work, and provision for raising the balls again to the required height, which is adjustable so that the velocity of the balls may be in accordance with the requirements of the work in hand. The balls, after falling on to the work, roll away into a scoop at the bottom of the chamber. By means of this scoop, the balls are lifted by hand and poured into a hopper surrounding the central chimney. When filled, the hopper is raised to the top of the machine, where the balls enter the 2 in. diameter chimney through special ports and so fall on to a perforated piston in the chimney, which forms the point of departure for the effective fall of the balls. The height of this perforated piston can be adjusted as desired, and a scale on the upright of the machine serves to indicate its position.

The door at the side of the chamber opens to allow the work to be placed in position and taken out again after testing, and the handle on the top of the chamber actuates the 8 in. table so that every portion of its surface comes in turn under the 2 in. diameter rain of steel balls.

In the 12-in. machine the perforated piston of the smaller machine is replaced by an adjustable hopper in the bottom of which is a slot 12 in. long. The balls fall through this slot in a vertical curtain, and the table on which the work rests is moved across under this curtain of falling balls by means of a rack and pinion, so that the whole area is rained on by the balls.

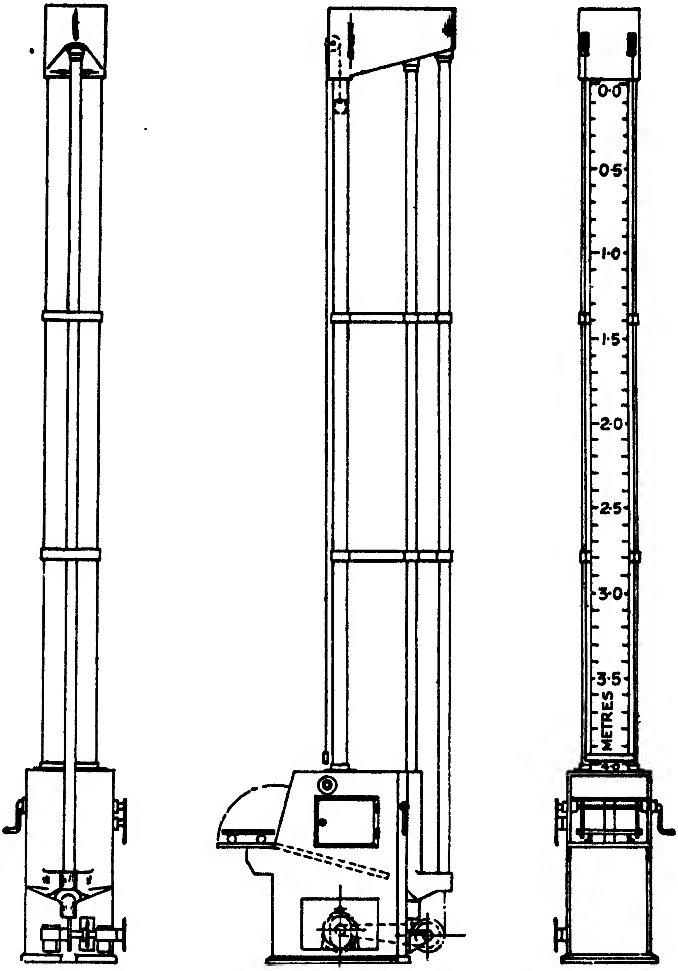

FIG. 162. THE CLOUDBURST HARDNESS TESTING APPARATUS

FIG. 163. ILLUSTRATING METHOD OF EXAMINING AND MEASURING HARDNESS IMPRESSIONS MADE BY THE CLOUDBURST METHOD

A projection type of microscope is used with this method when it is required actually to measure the hardness values. With this instrument, when any portion of the surface of an article is held against an opening, an image, magnified to a diameter of 8 in., is projected on to a graduated screen which is enclosed in a dark chamber, provided with an inspection window as shown in Fig. 163. The degree of hardness is measured by the diameters of the indentations as in the case of the Brinell test.

Portable Hardness Testers

A number of different designs of hardness-testing devices have been produced to enable tests to be made on engineering parts *in situ*, i.e. on articles which cannot be taken to the bench or pedestal mounted type of hardness testing machine. Whilst many of these portable hardness tests do not give the high standard of measuring accuracy of the fixed machines they are convenient for tests upon finished structures, raw materials in stores, rivet heads and similar items. Usually, they take the form of a precision dial gauge with plunger indenter, the gauge measuring, on its hardness scale, the depth of the impression made under a given indentation pressure; the latter is applied by hand effort and a suitable stop ensures that the resulting pressure cannot exceed the designed value. In another design the penetrator has a number of indenting teeth which are applied to the surface under test with a known pressure. The hardness is then estimated from the number of impressions made, this number being a minimum for harder and a maximum for softer metals.

FIG. 164. THE AUTO-PUNCH FOR HARDNESS TESTS

FIG. 165. THE HARDNESS MEASURING SCALE USED WITH THE BRINELL PUNCH

The Rudge-Whitworth auto-punch illustrated in Fig. 164 is based upon the same principle as the automatic centre punch. Its lower end carries a chuck for holding the hardened steel ball of the indenter. The punch contains an internal spring and hammer with an automatic device, such that when the indenter is placed normal to the surface and increasing pressure is applied by hand to the top of the punch the hammer is released under a constant spring pressure, every time. The diameter of the impression made is measured with a wedge-type graduated scale on a transparent strip (Fig. 165) and from data supplied with the punch the readings can be readily translated into standard Brinell ones.

An example of a combined dial gauge and controlled spring pressure type indenter hardness tester known as the Barcol is illustrated in Fig. 166*. It may be used on surfaces located at any inclination and, as the maximum indentation pressure is automatically controlled, its accuracy does not depend upon the skill or sense of touch of the operator. The instrument, as supplied for testing flat surfaces, has the tee-shaped guide spindle or leg (shown on the right) in the correct position so that all that is required is to place the tester on the flat surface and press down on the casing grip, when the needle of the gauge gives the hardness reading. For testing rivet heads or curved surfaces packing washers are inserted above the leg. The calibration adjustments are arranged within the grip portion and the securing screws can be sealed, after locking. A test piece is supplied for checking the accuracy of the dial, since wear of the indenter may occur after long periods of service. A chart is also provided for converting the hardness readings of the dial to Vickers, Brinell, and Rockwell scales.

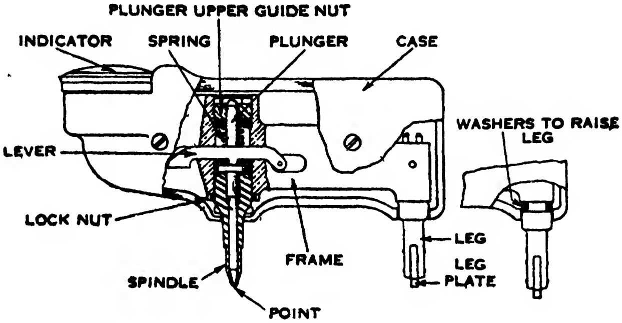

FIG. 166. THE BARCOL PORTABLE HARDNESS TESTER

The Duroskop portable hardness tester† shown in Fig. 167 utilizes a pivoted pendulum hammer and a light pointer which moves over a graduated scale of sector form. The principle used is that of rebound, the amount of the hammer rebound being indicated by the final position of the pointer on the scale. For this test the instrument

---

* Courtesy *Aircraft Production*.

† *Machinery*, 4th February, 1941.

must be held either vertically or horizontally, a spirit level being provided for this purpose. Fig. 168 is a sectional view of a special attachment supplied for use when testing small or awkwardly-shaped components. The work at *A* is held against an anvil by means of the spring-loaded hammer-bolt *C*, the tension of the spring being adjustable by means of a sliding wedge *D*. The hammer *E* is set by means of a knurled knob outside the case and in the raised position is held by a catch. The latter is actuated by means of a button projecting through the side of the case, allowing the hammer pendulum to fall from a definite vertical height every time, to strike the indenter. On the rebound, a lug on the hammer engages the friction-controlled needle which is carried up the scale to the full extent of the hammer's rebound and remains in this position for reading at any convenient time.

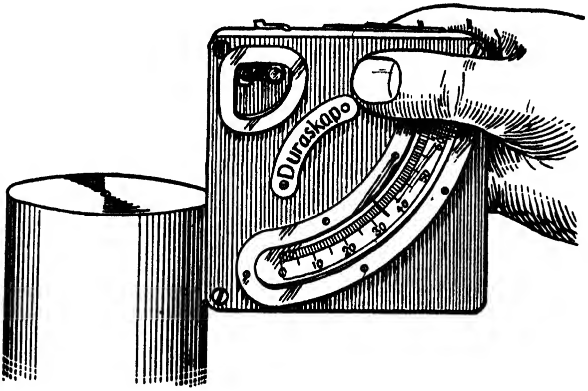

FIG. 167. THE DUROSKOP PORTABLE HARDNESS TESTER

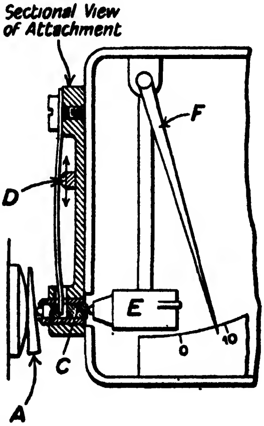

FIG. 168. MECHANISM OF DUROSKOP HARDNESS TESTER

An advantage of this type of hardness tester is that it does not mark the work as the hammer is very light. A conversion chart is supplied giving Brinell, Rockwell, and Scleroscope equivalents to the Duroskop readings.

The Webster hardness gauge (Fig. 169) takes the form of a pair of pliers and is based upon the use of a number of indenters on the penetrator device, viz. four teeth each of different length. The work to be tested is placed between the round bar shown on the lower left-hand side and the penetrator barrel above; the indenter teeth project slightly below the lower face of the barrel. When sufficient pressure is applied to the handles the penetrator is forced on to the surface under test; excessive pressure, however, cannot affect the reading.

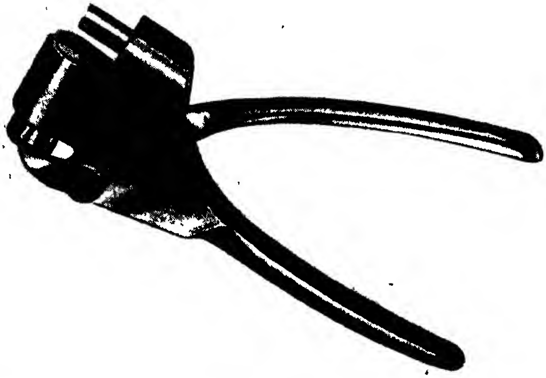

FIG. 169. THE WEBSTER PORTABLE HARDNESS TESTER

FIG. 170. THE WEBSTER HARDNESS TESTER IN USE ON AIRCRAFT WING STRUCTURE

The relative hardness is indicated by the number of impressions made on the surface. On softer metal the greater depth of penetration results in more impressions. On harder metal the more shallow penetration results in fewer impressions. The load spring is adjusted to show the desired number of impressions on a metal of known hardness. Variation from this hardness will be indicated by more or fewer impressions.

The main use of this gauge has been the checking of condition of strong aluminium alloys used in aircraft construction. The load spring is adjusted to show a faint second impression on aluminium alloy at the minimum hardness permitted. A single impression indicates a hardness above the minimum required, while two or more impressions indicate either low hardness of strong alloy or wrong material. Three or four impressions are obtained on the softer alloys of aluminium depending on the temper.

The pliers principle has also been applied in the "Brinell Pliers" tester for measuring the hardness of thin metals such as tubes, cartridge cases, sheet metal stampings, etc. In this instrument one jaw of the pliers carries a cylindrical unit containing a spring-loaded plunger having a hardened steel ball of $\frac{3}{64}$ in. diameter. Pressure between the ball and specimen is limited to about 20 lb. The impression made is usually about 0·5 mm. diameter on hard sheet brass.

Whilst there are other commercial forms of portable hardness testers available these, generally, fall into one or other of the categories dealt with in the selected examples.

Checking of Hardness Testing Machines

Whilst it is possible to check the accuracy of the Brinell and pyramidal diamond indenter types of machine by actually measuring the loads (using dead weight or calibrated spring apparatus) and the dimensions of the impressions made by these known weights over the scale range, with the aid of the basic formulae given earlier in this chapter, a more convenient method for commercial machines is to employ standard test pieces. These consist of bars of metal, the Brinell or diamond hardness numbers of which have been determined in the laboratories of the manufacturers. Each test piece is stamped or etched with its correct hardness number and it is necessary to measure only the hardness on the machine that is to be checked and compare the result with the stated hardness. The test pieces should be chosen with hardnesses to give at least three points over the complete hardness scale range.

Similar test pieces are available for other types of hardness testers, such as those operating on the rebound principle.

Hardness of Super-hard Materials

Whilst the use of the Brinell steel ball method is limited to materials whose hardness does not exceed 500 Brinell, the pyramidal diamond indenter can be used for harder materials, including case-hardened and nitrided surfaces, provided suitable precautions are taken. If the thickness of the surface-hardened layer is such that the indenter also impresses the softer core metal beneath, lower hardness values will result. For case-hardened work, with the Vickers pyramidal diamond indenter it is recommended that the depth of case should be tested by applying diminishing loads until the hardness figure remains steady; then, the casing is entirely supporting the test load.

With certain very hard nitrided steels the margin of the usual diamond test indentation is sometimes indefinite on account of chipping which causes a greater penetration than that corresponding to the actual hardness of the case; in addition there is an appreciable variation of hardness with the depth.

Again, cutting alloys such as tungsten and tantalum carbides possess slightly porous surfaces which make polishing difficult, so that true readings of hardness are difficult to obtain. Under such circumstances it is necessary to apply a test which disregards surface conditions and takes a reading slightly below the surface, whilst avoiding any chipping effects.

In a method, known as the Monotron,* these conditions are obtained by using a $\frac{3}{4}$ mm. diamond indenter with spherical end to simulate the extended Brinell ball method. This causes a definite indentation for a given load, the instrument being graduated in $\frac{1}{5000}$ in. whilst the load scale is given in pounds, kilogrammes or Diamond Ball Brinell. In hardened steels and the softer metals a penetration depth of $\frac{9}{5000}$ in. is obtained; for hard steel the load required for this depth is from 100 to 115 kg., i.e. approximately 11 kg. for each $\frac{1}{5000}$ in. penetration.

Fig. 171 shows the results of diamond ball Brinell (0·75 mm.) tests made on the various materials mentioned in the caption; these include a number of super-hard materials.

The Rockwell method has also been applied to the hardness testing of carbides using, instead of the 150 kg. diamond indenter load of the *C* scale, a load of 60 kg. only, with the Rockwell *A* scale, so that the stresses on the indenter are correspondingly less. A series of tests on sintered carbides made by the Wilson Mechanical Instrument Company†—the makers of the Rockwell machines—enabled results to be correlated on the *A* and *C* scales as shown in Fig. 172; this also gives the conversion formulae. It was found that the 150 kg. *C* scale method caused strains or produced slight chippings of sintered carbides, as used for tool tips, so that the *A* scale method was adopted and the readings were converted to the *C* scale by the formulae or graph given in Fig. 172. In testing these carbides it is necessary to have the bottom surface quite flat and the top surface as nearly parallel to it as is practically possible. The indentations for the *A* scale are approximately

---

* "Hardness Testing of Super-hard Materials," A. F. Shore, *American Machinist.*

† "Hardness Testing of Carbides," M. F. Judkins, *The Machinist*, 19th November, 1938.

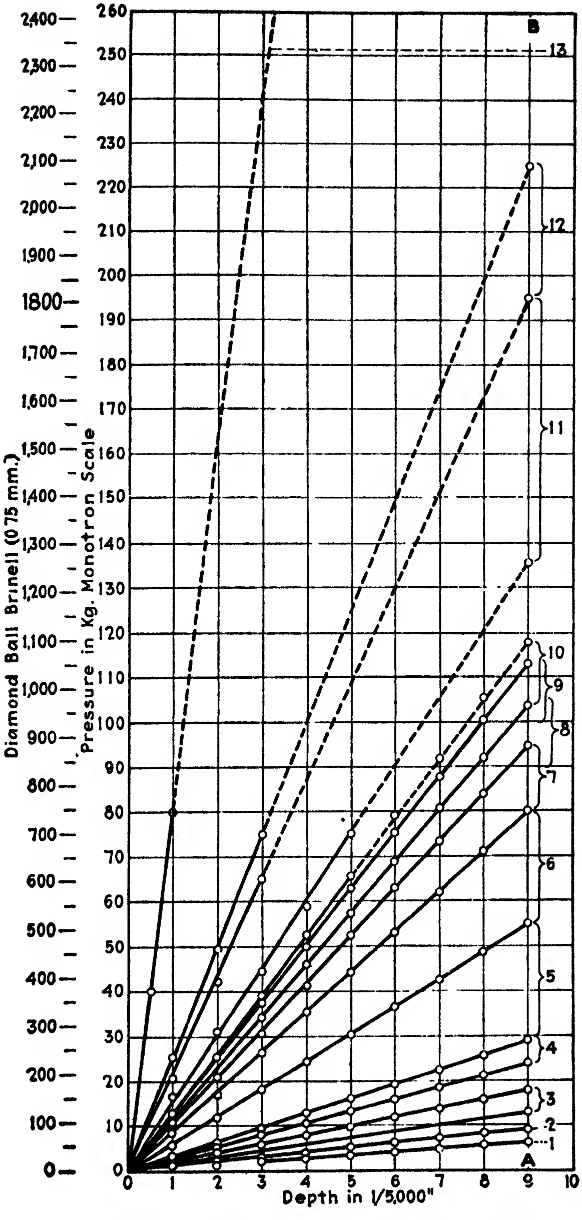

FIG. 171. ILLUSTRATING RESULTS OF SUPER-HARD TEST METHOD (SHORE), SHOWING PRESSURES AND PENETRATIONS

Key to Numbers on Graph; 1 = Copper. 2 = Brass. 3 = Mild steels. 4 = Annealed tool steels. 5 = Heat-treated machine parts. 6 = Steel, spring tempered. 7 = Tools, tough tempered. 8 = High-speed steels, hardened. 9 = High-carbon steels, quenched. 10 = Nitrided steel. 11 = Tungsten carbide, average hardness. 12 = Tungsten carbide, super-hard. 13 = White diamond, super-hard one-third the depth of those for the *C* scale test, so that the *A* scale diamond indenters have to be made very accurately.

Micro-hardness Tests

The ordinary ball and diamond indenters cannot be used satisfactorily on relatively coarse crystalline structures consisting of harder particles in a softer matrix, although for finer grained metals such as steels and most constructional metals they give an average hardness reading for the various constituents. It occasionally happens, however, that the hardness values of microscopic areas of materials made by sintering metallic powders or of the abrasive elements in composite grinding or cutting alloys, e.g. tungsten carbide structures, are required. For this purpose a micro-hardness tester has been developed by the Research Department of the General Electric Company of America. It consists of a minute diamond indenter mounted in such a manner that it can be attached to a microscope in the position of the objective. The cross-wires of the eyepiece are used to align the diamond over the spot where the hardness is to be measured. The diamond is then forced into the test material at this place by means of a calibrated spring so as to make a characteristic pyramidal indentation, the dimensions of which are measured by means of a microscope micrometer or equivalent method.

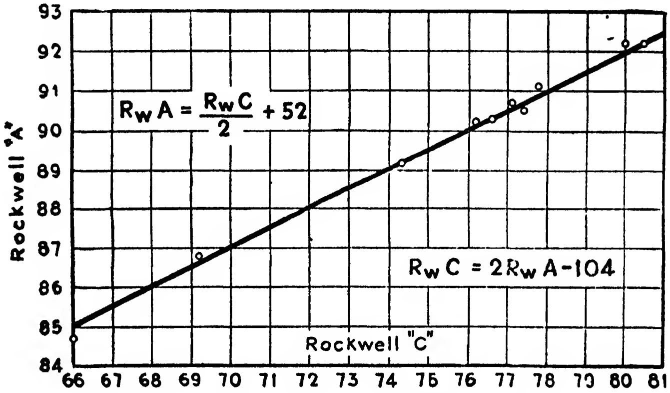

FIG. 172. ROCKWELL TESTS ON SUPER-HARD MATERIALS

The hardness values are expressed on a scale known as the Knoop one, and these values, over the Vickers diamond numeral scale range, do not differ appreciably from the V.D. numerals. Thus, for heat-treated 1·1 per cent carbon steel the Knoop hardness number is 700 to 800 and the V.D.N. 843. For a lightly tempered carbon steel the corresponding values are 400 to 500 and 455, respectively. For cold-rolled 0·2 per cent carbon steel the relative values are 260 and 240. Annealed electrolytic iron gave values of 100 to 120 and 92, respectively, whilst cold-worked aluminium gave 34 and 28, respectively. The micro-hardness tester has been used to measure the hardness of a single tungsten carbide grain, which gave a corresponding V.P.N. of 1850; this is much higher than the value obtained with ordinary diamond hardness testers, owing to the softer cementing material being included in the latter tests. The instrument has also been used successfully in the study of welds, small wires of 0·2 mm. diameter, metal strips or foils of thickness of the order of a few hundredths of a millimetre, layers of carburized or nitrided cases on steels, extremely soft metals such as lead and extremely hard metals including certain types of diamond, sintered carbides, aluminium oxide, glass, etc.

Hardness of Plastic Materials

The Brinell test has been suggested for measuring the hardness of plastic materials, laminated plastics and synthetic-resin bonded plywoods, but this method is open to certain objections.

According to a standard German engineering specification,* the hardness of a plastic is calculated from the depth of impression of a 5 mm. steel ball whilst carrying a 50 kg. load. Erk and Holgmuller have pointed out that the total deformation measured under these conditions consists partly of a permanent (plastic) set and partly an elastic deformation. Since the latter may amount to anything between 45 per cent and 90 per cent of the total, depending on type of plastic, it is obvious that the method cannot be used for a direct comparison of hardness. As is well known, the deformation of a plastic is mainly controlled by the time of application of the load. For this reason, Frohlich has developed a new hardness tester of the rolling type in which the time of application of the load is controlled. In this instrument a steel ball of 5 mm. diameter is caused to roll on the specimen at speeds varying between 5×10^{-6} and 50 mm./sec., the load being constant and equal to 2 kg. When plotting the 4th power of the track width against the 4th root of the time of application of the load, the resulting curves are almost straight, rendering extrapolation to zero time of application easy. For these very short durations of the load plastic deformation can be neglected, and it is found that the track width of various plastics are roughly in the order of the respective moduli of elasticity.

In regard to the plastic deformation as a function of time, experiments were carried out on 10 different plastics for load periods of 1, 10 and 60 secs. In the harder plastics there was very little decrease in

---

* "Determination of the Hardness of Plastic by a Modified Brinell Method," *Z.V.D.I.*, Vol. 80, No. 15, 13th April, 1940.

rolling hardness values with increase of load period, but certain synthetics derived from cellulose acetate gave appreciable plastic flow under load.

The application of the usual Brinell test to non-metallic materials is not reliable owing to the elastic recovery, the difficulty of preparing a satisfactory surface finish in many cases, the irregular nature of the edge of the impression, the failure of certain materials under the usual loads, and the oval-shaped impressions given by grained or non-homogeneous materials.

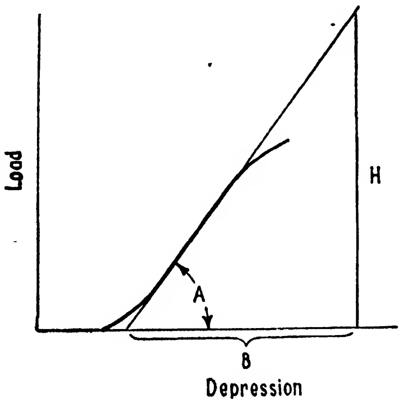

FIG. 173. HARDNESS OF PLASTIC MATERIAL

A method proposed by L. H. Hounsfield,* which has given reliable results, is to measure the depressions under different loading conditions and to plot a load-depression graph. Fig. 173 shows the type of graph obtained. It will be seen to consist of two curved and a straight portion. The tangent of the angle *A* of this straight portion, or *H*/*B* is then taken as the hardness of the material.

For good-quality synthetics a load of 1000 lb. on a 10 mm. ball gives satisfactory results; with timbers, where the grain is coarse a larger diameter ball is employed.

Whilst the hardness values thus obtained do not conform to any specific hardness scale they are comparative and can be used to check the uniformity of supplies or of products.

Typical hardness values are as follows: mica composition, 5·38; Erinoid, 4·66; Fabroil, 3·01 to 3·72; plastic material, 3·45; Bakelite, 3·01; red vulcanized fibre, 1·64; ebony, 0·85; hornbeam, 0·48; oak, 0·37 to 0·39; teak, 0·28; yellow deal, 0·25; spruce, 0·16; cedar, 0·11.

---

* "Testing of Non-metallic Materials," L. H. Hounsfield, *Aircraft Production*, April, 1939.

CHAPTER VIII

THE FATIGUE STRENGTH OF METALS

Varying Stresses and Fatigue Strength

HITHERTO we have dealt with the subject of steady direct stresses applied gradually and without shock. In a very large number of practical cases, however, members are subjected to the effects of loads that do not remain steady, but which vary frequently in amount; these are termed repeated loads, and the corresponding stresses are varying stresses.

The study of the stresses caused by such fluctuating loads is a very important one in engineering work, and although a good deal of theoretical work has been carried out and certain definite conclusions arrived at, yet the majority of the directly applicable results have been derived from experiments.

The varying stresses generally range between a minimum and a maximum (without shock); they then vary on either side of a mean value M.

If the total range of stress be denoted by R, then the maximum and minimum stresses will be $M + \frac{R}{2}$, and $M - \frac{R}{2}$, respectively.

There are three principal types of varying stress met with in engineering practice, as follows—

(1) **Alternating.** In this case the maximum and minimum stresses are of opposite sign, e.g. $+ M$ to $- N$.

(2) **Repeated.** Here the range of stress is equal to the maximum stress, so that $M = R$. In other words, the stress varies from zero to a maximum M.

(3) **Fluctuating.** In this type of variable stress, there is a varying stress imposed on a steady stress of the same sign. The maximum and minimum values of the resulting stress are of the same sign.

If the alternating stress has equal but opposite values for its maximum and minimum stresses, the mean stress becomes zero and this particular case is known as that of *reversed stresses.*

In all the cases enumerated the cycle of changes of stress repeats itself very frequently. The frequency of the stress cycles has, in some cases, a certain bearing upon the results of varying stresses, and so should always be stated.

If the stress limits lie well within the elastic limits the stress variations may proceed for very long periods; for example, the hair spring of a watch is alternately in tension and compression at the rate of about 150 million alternations per annum.

On the other hand, if a piece of metal strip or bar be bent backwards or forwards a few times so that stresses are outside the elastic limits, it will fracture in a very short time.

It has been found that metals which are subjected to frequently alternating stresses will fracture at a much lower value than their ordinary statical stress, and that the material will fracture sooner for a given range of reversed stress than for the same range of varying stress.

Further, the effect upon the elastic limit of a frequently varying stress of a maximum amount which does not exceed the original statical elastic limit is to raise the latter; the effect of a reversed stress is to lower the elastic limit.

In the considerations that follow it is proposed first to deal with the experimental aspects of the subject of fatigue strength, giving the results of various investigations by recognized authorities, and then to give an outline of modern explanations of the contributory causes of the observed fatigue phenomena. Descriptions of some typical fatigue testing machines and apparatus then follow.

Wöhler's Tests

Extensive researches upon alternating stress effects, extending over a period of twelve years, were made by Wöhler,[*] the results of which were published in 1870.

These tests were made in machines of different kinds in which the specimens could be subjected to direct tension between any predetermined limits, to repeat bending in one or in opposite directions, or to repeated torque of opposite signs.

Since Wöhler's classical experiments a very large number of other investigations have been carried out by other authorities, including Stanton[†] (and the N.P.L.), H. F. Moore,[‡] R. R. Moore,[§] McAdam,[‖] Jenkin,[¶] Lea,[**] Haigh,[††] Bauschinger[‡‡] Hankins,[§§] and Gough.[‖‖]

Subsequent to the period covered by the footnote references a large amount of experimental work has been carried out by various

---

[*] *Die Festigkeits-Versuche mit Eisen und Stahl*, Berlin, 1870. Also in *Engineering*, vol. xi, 1871.

[†] *Engineering*, 17th February, 1905. Also *vide* N.P.L. Annual Reports.

[‡] *Bulletin*, No. 136, Eng. Exper. Stat. Univ., Illinois, 1923.

[§] *Proc. Amer. Soc.*, "Test Materials," Part 2, 1927.

[‖] *Proc. Amer. Soc.*, "Test Materials," vol. xvi, Part 2, 1916.

[¶] *Proc. Royal Soc.* (A), vol. cix, 1925.

[**] No. 920, "Reports and Memoranda Series," *Aeron. Research Committee*, June, 1924.

[††] *Journ. Inst. Metals* (2), vol. xviii, 1917.

[‡‡] *The Engineer*, 10th December, 1886; and 7th January, 1887.

[§§] *Bulletin*, No. 164, Eng. Exper. Stat. Univ., Illinois, June, 1927.

[‖‖] Gough and Tapsell, No. 1012, "Reports and Memoranda," 1926, *Aeron. Research Committee*.

TABLE 36

TABLE OF EXPERIMENTAL DATA SHOWING THE VALUES OF THE LIMITING RANGE OF STRESS WITH VARIOUS MEAN STRESSES

Applied Stress System	Material	Ref. No.	Stresses (Tons per sq. in.)			Investigator
			Ultimate Tensile Strength	Fatigue Tests		
				Mean Stress of Cycle	Safe Range of Stress	
Direct stresses (tension and compression)	Bessemer steel	1	28·6	0 7·85 18·6	17·1 15·7 9·1	Bauschinger
	0·13% Carbon steel	2	25·2	− 12·2 − 9·35 − 5·2 0 4·95 9·87 12·80	19·5 21·5 23·5 26·0 24·5 21·5 17·5	Haigh
	Nickel chromium steel	3	51·4	− 10·0 0 15·1 18·0 20·0 25·0 34·2 42·1	53·5 46·0 33·5 32·5 25·0 18·5 14·5 8·3	Lea
	Naval brass	4	28·7	− 6·0 − 3·26 0 4·0 6·23 7·72	29·0 27·4 24·0 21·0 19·2 17·5	Haigh
Plane bending stresses	Spring steel (H)	5	57·5	12·75 23·75 30·0 37·5	25·5 22·5 20·0 15·0	Wöhler
Reversed bending stresses with superimposed tension or compression	3½% Nickel steel (H. & T.)	6	55·2	0 3·0 4·9 11·1 21·5 28·7 33·8	53·6 54·6 49·2 52·0 42·9 31·8 22·5	Moore and Jasper
	0·53% Carbon steel	7	40·9	0 3·2 10·5 16·1 23·1	29·4 25·7 21·0 21·4 15·4	Moore and Jasper
	Cast iron	8	14·1	3·46 0 − 5·71 − 14·5	6·93 9·38 17·2 29·0	Moore, Lyon, and Inglis
Torsional stresses	0·6% Carbon steel (H. & T.)	9	78·5	0 24·0 40·0	47·0 44·0 31·0	Hankins
	0·6% C. steel (normalized)	10	55·0	0 18·0 32·0	28·6 28·0 27·0	
	Chromium vanadium steel (H. & T.)	11	79·0	0 27·0 42·0	50·0 45·0 33·0	
	0·18% C. steel (normalized)	12	30·6	0 4 18·5	20·0 18·75 18·0	

investigators, covering not only the mechanical test data aspect, but also the causes and conditions of fatigue phenomena, from the microstructural change point of view. References to some of the later investigations are given in the footnotes of succeeding pages.

A good account of the experimental results will be found in H. J. Gough's *Fatigue of Metals*, and in *Fatigue Phenomena*, by H. J. Gough (Cantor Lectures, Royal Society of Arts, 1928).

Various machines for applying rapidly varying stresses of different kinds, including tension, compression, bending and torsion have been devised, and accounts of these are to be found in some of the papers and articles referred to.

The general result of these earlier researches (since repeated and confirmed by other experimenters) was to show that the resistance to fracture or the safety of any engineering structure under alternating stresses depends primarily upon the *range of variation of the stress*, and also upon the number of stress repetitions.

Further, that reversed stresses well within the elastic limits will ultimately cause fracture if repeated for a sufficiently large number of times.

Wöhler has also shown that in general the smaller the range of stress,

TABLE 37

RELATION BETWEEN STRESS REPETITIONS AND STRESS RANGE (Wöhler)

(Rotating Bars in Reversed Bending)

Material	Stress in Tons per sq. in.		Range of Stress in Tons per sq. in.	No. of Repetitions before Fracture
	Maximum	Minimum		
Axle steel . .	+ 16·3	− 16·3	32·6	51,240
	15·3	15·3	30·6	72,940
	14·3	14·3	28·6	205,800
	13·4	13·4	26·8	278,740
	12·4	12·4	24·8	564,900
	11·5	11·5	23·0	3,275,860
	10·5	10·5	21·0	8,660,000*
Copper rod . .	+ 7·64	− 7·64	15·28	30,875
	7·64	7·64	15·28	67,725
	6·69	6·69	13·38	480,700
	6·21	6·21	12·42	663,100
	5·97	5·97	11·94	798,000
	5·73	5·73	11·46	2,834,325
	4·78	4·78	9·56	19,327,460

* Not broken.

and the lower the value of the maximum alternating stress, the greater the number of repetitions of stress it will stand before fracturing.

Below a certain limit of stress range, the material will stand an indefinite number of stress repetitions before fracture.

Thus, in the case of a certain grade of mild steel it was found that when the tensile stress varied from zero to 30 tons per sq. in. at a given rate of loading, the material fractured. When the range was from zero to 25 tons per sq. in., half a million reversals, at the same rate of loading as before, were sufficient to cause fracture. From zero to 23 tons per sq. in., a million reversals caused fracture; from zero to 20 tons per sq. in., 4½ million reversals were necessary.

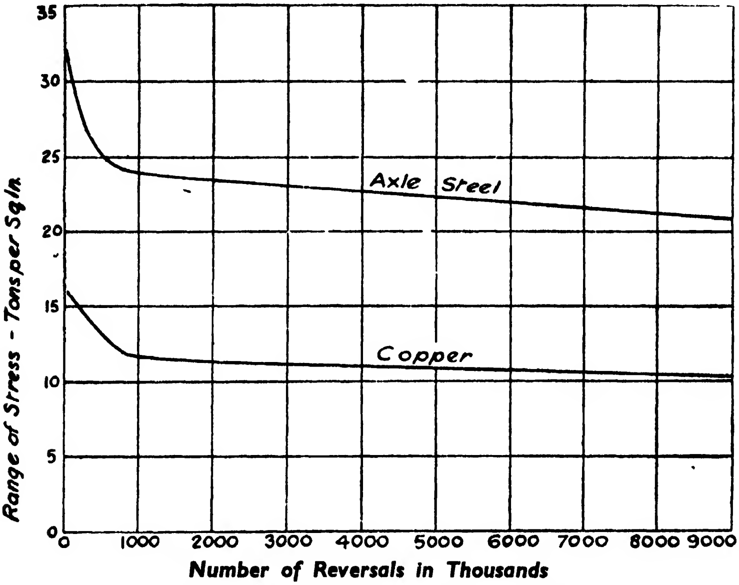

Fig. 174. Wöhler's Repeated Stress Results

When the stress varied from zero to 15 tons per sq. in. it was found the "limiting range of stress" was reached at which an indefinitely large number of reversals would be necessary to cause fracture.

It has been found that alloy and high-carbon steels withstand a greater number of stress repetitions of the same range than mild steel or wrought iron, and that they possess a higher limiting range of stress.

The results given in Table 37, and which are represented graphically in Fig. 174, show the relations between the range of stress and the number of stress repetitions for the materials indicated.

The effect of "reversed" stresses as compared with "varying" stresses is best shown by considering some of the experimental results, such as those given in Table 38. It will be seen at once that for a given number of stress repetitions causing fracture the range of reversed stress may be about the same in each case, but that the maximum stress for a given range is considerably lower for the case of reversed stresses.

TABLE 38

Results of Repeated Stress Tests. (Wöhler Machine)

Material	Minimum Stress	Maximum Stress	Range of Stress	Static Tensile Strength	Authority
		Tons per sq. in.			
Wrought-iron plate . .	0	13·1	13·1	22·8	Bauschinger
	11·4	19·2	7·8	22·8	,,
	− 7·15	+ 7·15	14·3	22·8	,,
Bessemer steel . .	0	15·7	15·7	28·6	Bauschinger
	14·3	23·8	9·5	28·6	,,
	− 8·5	+ 8·5	17·10	28·6	,,
Axle steel . .	0	18·4	18·4	39·0	Bauschinger
	19·5	30·85	11·35	39·0	,,
	− 9·7	+ 9·7	19·4	39·0	,,
Krupp's axle steel .	0	26·5	26·5	52·0	Wöhler
	17·5	37·75	20·25	52·0	,,
	− 14·05	+ 14·05	28·10	52·0	,,
Spring steel (not tempered)	0	25·5	25·5	57·5	Wohler
	12·5	35·0	22·5	57·5	,,
	20·0	40·0	20·0	57·5	,,
	30·0	45·0	15·0	57·5	,,

Note. The above results refer to cases in which the material withstood at least 2 or 3 million repetitions before breaking.

Another feature confirmed by the tabular data is that of the greater range of stress which materials of higher tensile strength will withstand; thus, in the case of the wrought-iron tests the maximum range of reversed stresses was 14·3 for a tensile strength of 22·8 tons per sq. in., whereas in the case of Krupp's axle steel this range was 28·1 for a tensile strength of 52 tons per sq. in.

In the case of the results given for untempered spring steel (Table 38) it will be seen that the range of varying stress progressively diminishes as the maximum value of the stress attained increases, the limiting value being that of zero range for the ultimate statical tensile strength.

Determining the Safe Stress Range

Practically all fatigue testing machines are arranged to run for exceedingly long periods, since although when the applied range of stress is relatively large the test specimen may break down after a few thousand repetitions, yet as the stress range is reduced it may require some millions of cycles before the specimen breaks.

Table 39, taken from some of Wöhler's* tests, will serve to illustrate this point.

TABLE 39

WÖHLER'S TESTS ON AXLE IRON

Specimen No.	Applied Range of Stress (Tons per sq. in.)	Endurance Limit (E.L.) (No. of Repetitions to Fracture)
1	± 15·3	56,430
3	± 13·4	183,145
5	± 11·5	909,840
7	± 9·6	4,917,992
8	± 8·6	19,186,791
9	± 7·6	132,250,000 (unbroken)

Under present-day engineering conditions many metal parts, of railway engines, motor-cars, electric machines, bridges, etc., have to withstand some thousands of millions of cycles of stress, so that any tests must indicate the effects of this very large number of repetitions of stress.

In this respect it is usual to carry out a series of tests on a number of similar specimens of the material under test, commencing with a value of the applied stress range, such that the specimen breaks after a hundred thousand or so cycles, and then gradually to reduce the stress range until, as in Wöhler's example just quoted, the specimen will only break after some millions of cycles.

It is not always convenient or practical to run fatigue tests over the very long periods corresponding to, say, hundreds of millions of cycles, and in such cases the results deduced from limited repetition tests are to some extent conjectural.

The S-N Curve

If the corresponding values of the stress-range S and the number of cycles of stress N be plotted for a number of identical test pieces of a given material it is found that the general type of curve obtained is similar to those shown in Fig. 174, although, of course, the actual values of S and N will be different for various methods of loading and for different materials.

In practice it is found more convenient to plot the logarithmic values of S and N, when a somewhat similar shape of curve to that

---

* Reversed bending stresses.

shown in Fig. 174 is obtained. Fig. 176 depicts such a curve, and it will be seen that with increasing number of stress cycles the curve approaches a straight line parallel to the log N axis. The asymptote to this curve, which is indicated by the dotted line, indicates the limiting stress range value which the test piece will endure indefinitely, without fracture. The value E of this stress range is termed the *Endurance Limit*; this value can be obtained more accurately and conveniently from the "log S — log N" curve than from the S–N curve.

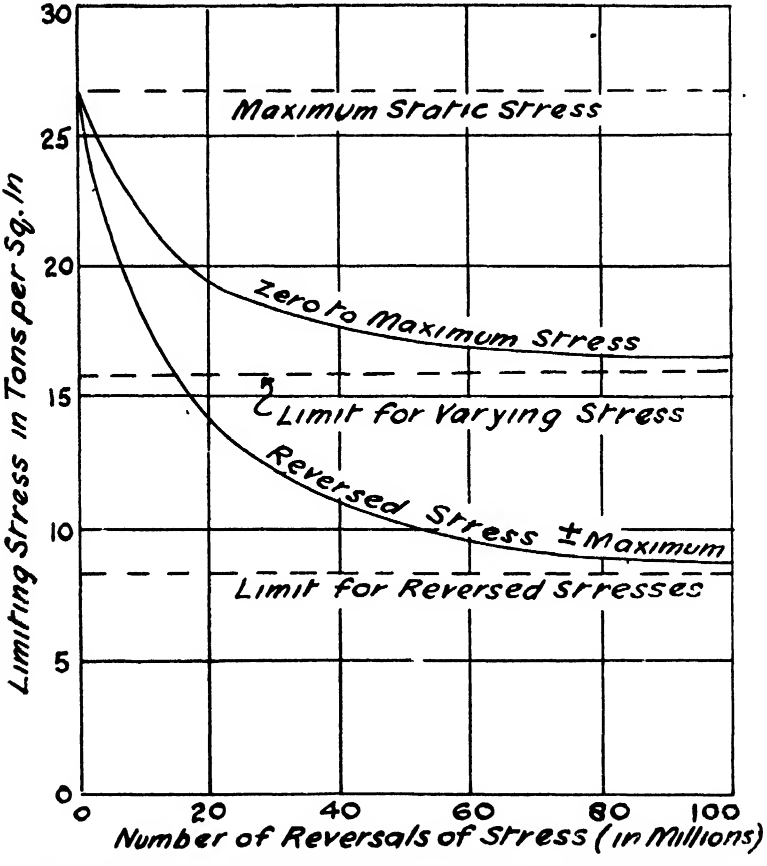

FIG. 175. STRENGTH OF MILD STEEL UNDER ALTERNATE STRESSES

In practice it is usual to employ the term *Endurance Limit* in connection with the maximum stress value, after many millions of stress cycles, that does not cause failure. The stress value for an infinite number of cycles, corresponding to the asymptotic part of the curve, is then referred to as the *Fatigue Limit*.

Usually it is sufficient to run fatigue tests for 30 million cycles in order to ascertain the endurance limit, although in special instances 100 or even 1000 million cycles are employed.

Since the periods required for such tests are often lengthy it is usual in cases where results are required as quickly as possible to employ as high a cycle frequency as possible. For many practical purposes it may be assumed that the endurance limit is not affected appreciably by increase in cycle frequency, but for more accurate purposes it is necessary to apply a correction, as mentioned later in this chapter.

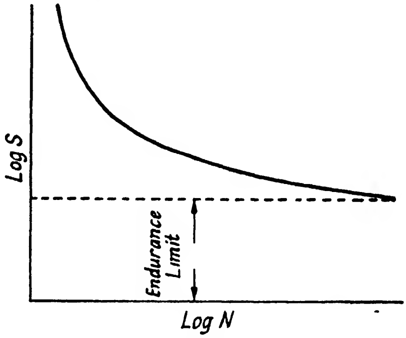

Fig. 176

Endurance Limits for Steels

The results of endurance limit tests made upon typical steels by the Wöhler rotating cantilever beam method are given in Table 40. In general the ratio of the fatigue limit stress to the tensile strength varies between 0·45 and 0·55, the higher values corresponding to the more ductile and lower tensile strength steels, e.g. mild steels.

TABLE 40

Endurance Limits of Steels (Wöhler Method)

Material	Condition	Tensile Strength, Tons per sq. in.	Endurance Limit,* Tons per sq. in	Authority
Carbon steel (0·12C)	Normalized	28·5	± 13·5	W. H. Hatfield
,, ,, (0·28C)	,,	35 8	± 14 9	,, ,,
,, ,, (0·41C)	,,	38 9	± 16·5	,, ,,
,, ,, (0 55C)	,,	46 5	± 19·0	,, ,,
,, ,, (0·55C)	O.H., 830° C., Temp., 600° C.	56 0	± 22 5	,, ,,
5% Nickel case-hardening steel	Refined 840° C., water quenched, 760° C.	58 8	± 26·0	,, ,,
Ni, Cr, Mo, V steel	Oil Q., 850° C., Temp., 640° C., A.C.	73·9	± 32·0	,, ,,
Chrome steel for ball bearings	Oil Q., 850° C., Temp., 490° C.	87·0	± 42 0	,, ,,
Silicon manganese steel	O.H., 860° C., Temp., 480° C.	90 2	± 43·0	,, ,,
Ni, Cr, Mo, V steel	O.H. and Tempered	149–153	± 57·0	H. J. Gough

* 20×10^6 cycles.

With very high tensile steels the ratio tends to fall to 0·40 (for steels of 100 to 120 tons per sq. in.). In the limiting value, for a steel of about 150 tons per sq. in. the ratio is 0·38.

Increasing the tensile strength, it will be observed, increases the resistance to fatigue.

In the case of annealed steels the endurance limit is usually greater than the yield point.

Endurance Limits for Magnesium and Aluminium Light Alloys

The results of endurance limit tests for some typical light alloys used for aircraft and automobile engineering purposes are given in Table 41. The Wöhler rotating cantilever beam method was employed in all cases.

TABLE 41

ENDURANCE LIMITS OF MAGNESIUM AND ALUMINIUM LIGHT ALLOYS (WÖHLER METHOD)

Material	Condition	Tensile Strength Tons per sq. in.	Endurance Limit† Tons per sq. in.	Authority
Pure magnesium	Annealed	11·0	± 4·46	L. Aitcheson
Elektron AZG magnesium alloy castings	As cast	9–11	± 5·0	F. A. Hughes, Ltd.
	Solution treated	14–16	± 5·0	,, ,,
Elektron AZM	Extruded bar	18–22	± 7·8–± 8·3	,, ,,
	As forged	18–20	± 8·0	,, ,,
Duralumin B	Wrought	22–24	± 9·5	L. Aitcheson
Duralumin F	Wrought	24–28	± 11·5	,,
Hiduminium 40 for castings	Annealed	8–11	± 4·0–± 4·5	High Duty Alloys, Ltd.
R.R.50 for sand and die castings	Sand cast*	11–13	± 4·5	,, ,,
	Die cast*	13–16	± 5·8	,, ,,
R.R.53 for sand and die castings	Sand cast*	18–20	± 5·5	,, ,,
	Die cast*	21–23	± 6·9	,, ,,
R.R.53C for sand and die castings	Sand cast	19–22	± 7·2	,, ,,
	Die cast	22–24	± 8·4	,, ,,
R.R.56	Wrought and solution treated and aged	27–30	± 10·04	,, ,,
R.R.56	Normalized, annealed	16–19	± 8·73	,, ,,

* Heat-treated to give maximum tensile properties.
† 20 × 10^6 cycles.

In the case of pure magnesium the ratio of the fatigue limit stress to the tensile stress is 0·41.

For the low tensile strength magnesium alloys (9 to 11 tons per sq. in.) the ratio is about 0·5, but for the high tensile strength ones (16 to 20) the ratio varies from about 0·33 to 0·42.

The sand and die cast strong aluminium alloys give ratios of 0·3 to 0·4, and the high tensile wrought alloys (24 to 30 tons per sq. in.) ratios of 0·35 to 0·45. Some comparative test results on three typical heat-treatment aluminium alloys obtained on an Amsler machine adapted to the Wöhler test method, for a speed of 2500 r.p.m. and 100 million cycles, are given in Fig. 177.*

The results of similar tests carried out on chill cast bars of various

---

* High Duty Alloys, Ltd.

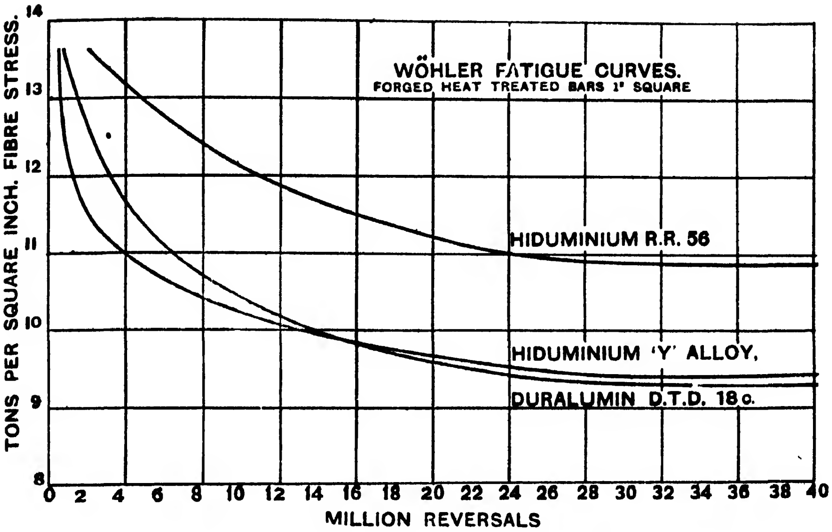

FIG. 177. WOHLER TEST RESULTS FOR FORGED HEAT-TREATED ALUMINIUM ALLOYS

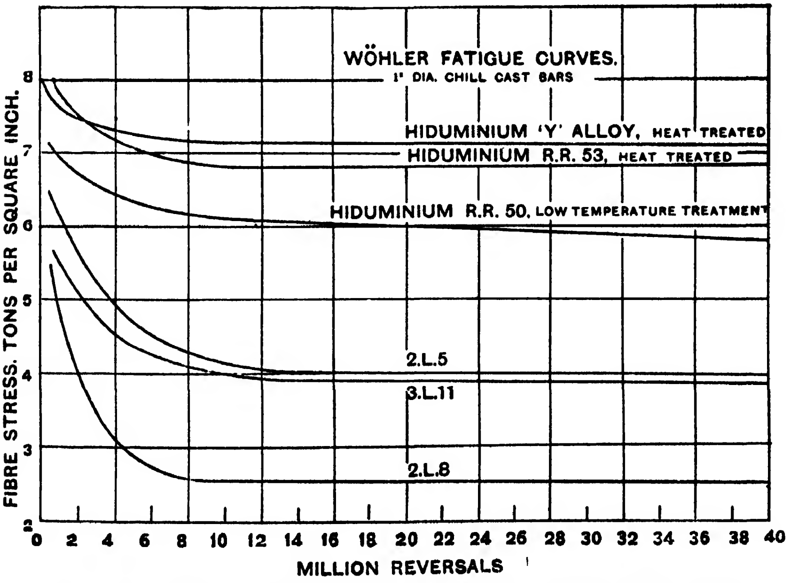

FIG. 178. WÖHLER TEST RESULTS FOR CAST ALUMINIUM ALLOYS

aluminium alloys, including the earlier B.S.I. aluminium-copper casting alloys,* are given in Fig. 178. The specimens tested were machined to 0·53 in. diameter, from the cast bars, at the point of maximum bending moment. The results indicate clearly the very great improvement that has been made in the endurance limit properties of the modern light alloys over those of the earlier ones (2.L.5, 3.L.11, and 2.L.8).

Endurance Limits of Other Metals

The metals that are usually employed for parts subjected to fatigue effects are usually the various structural and high tensile steels, the light alloys of magnesium and of aluminium, the high strength brasses, bronzes, and the nickel alloys.

In regard to wrought brasses of 85 per cent copper, downwards, the endurance limit usually lies between ± 6 and ± 10 tons per sq. in. Cold worked alpha brasses if subjected to low temperature heat-treatments at 250° to 270° C. will give endurance limit values up to ± 13 tons per sq. in. for 50 million stress cycles.

The nickel alloys, e.g. Monel, "K" Monel and Inconel, possess high endurance limits. Thus Monel, which in the hard-drawn condition has a tensile strength of 40 to 50 tons per sq. in., has an endurance value of ± 22 tons per sq. in., when stress-relieved, i.e. heated for 2 hours at 300° C. The corresponding values of "K" Monel, Inconel and nickel in the hard-drawn stress-relieved conditions are 22, 20, and 19 tons per sq. in., respectively. Other information concerning the mechanical properties of these and other non-ferrous metals is given in Volume II of this series.

Method of Testing and Endurance Limit Values

It has been shown that the endurance limit value depends upon the type of specimen used for the test and the nature of the test. Thus, the results for the Wöhler rotating bar test differ from that of direct push and pull or reversed plane bending on the same material.

The endurance limit in the Wöhler method is from 1·07 to 1·31 times the value obtained by the reversed plane bending one.†

The endurance limit in the reversed plane bending test is from 1·00 to 1·26 times the direct push-pull value, whilst the limit by the Wöhler method is 1·00 to 1·35 times the direct push-pull value.

From these results it follows that the Wöhler method of testing gives consistently higher values than by the other two methods, so that in applying the results of fatigue tests the nature of the loading conditions should be taken into account.

---

* *Vide Engineering Materials*, A. W. Judge, Vol. II, Chapter XXXV.

† "Fatigue in Metals," B. P. Haigh, p. 179, *Kempe's Engineers' Year Book*, 1939.

Endurance Limit for Spring Materials

According to the results of McAdam's investigations for spring steels, the ratio of the endurance limit in tension-compression or repeated bend to the tensile strength is from 0·4 to 0·5. The ratio of the torsional endurance limit to the tensile strength is from about 0·2 to 0·3. The torsional endurance range is about twice the torsional endurance limit and is practically constant for any position within the elastic range. It seems possible, also, that in tension-compression or repeated bend the endurance range is practically constant within the primitive elastic range.

Other Factors Affecting Fatigue Strength

Apart from the range of applied stresses, their frequency and the total number of repetitions, in the case of a given metal, there are other factors that affect the fatigue strength. A brief summary of the principal factors is given herewith.

(1) **Sudden Change of Section.** The ordinary fatigue test specimen is carefully machined and finished to parallel section, so that its measured strength value represents the best possible conditions.

In applying the results of such tests to practice, account should be taken of the lack of uniformity of the sections experiencing repetitions of stresses. For example, in the case of a crankshaft, gearwheel, or shaft with a keyway cut in it, the sudden changes of section will cause these parts to fail under lower endurance limit values than for plain test specimens.

The presence of a V-thread on a shaft will reduce appreciably its fatigue strength value. ✓✓

Tests made by Stanton and Bairstow* on specimens subjected to reversed direct stresses showed that in the case of mild steel (0·07 per cent C) having a tensile strength of 21·9 tons per sq. in., if the endurance limit (E.L.) of specimens without rapid changes of section be denoted by unity, then in the case of specimens having moderately rapid changes of sections, i.e. small fillets, the E.L. was reduced to the value 0·72; for specimens with Whitworth V-threads to 0·74; and for specimens containing sudden changes of sections, i.e. square shoulders, to 0·64.

In the case of 0·65 per cent steel with a tensile strength of 47·6 tons per sq. in., the values corresponding to the above four conditions were respectively 1, 0·68, 0·69, and 0·48.

✓Tests made with specimens subjected to reversed bending stress repetitions indicate a somewhat similar loss in fatigue strength.

The conclusion that can be drawn from these results is that

---

* *Proc. I.C.E.*, vol. clvi, part 4, 1905–6.

wherever possible the changes in section should be very gradual; i.e. large radii should be used for the fillets.

A further example may be cited as showing the influence of a sudden change of section, namely, the results of a series of tests made by Gough on shafts having keyways cut in them.

The shafts used for the experiments were of 0·400 in. diameter; some of the shafts were solid, others had a keyway of standard proportions of width and depth; a third series had keyways of standard depth, but one-half standard width proportions.

Two materials were investigated, namely, Armco iron (tensile strength, 18·7 tons per sq. in.) as representing a very ductile material, and a medium carbon steel (0·65 per cent C) with a tensile strength of 50 tons per sq. in.

The results of these tests are given in Table 42.

The stiffness factors of the shafts were calculated from formulae evolved by Griffith,* based upon the soap bubble method of Pranel's theorem.

The theoretical and experimental values it will be seen agree fairly closely. The results also showed that within the elastic range the theoretical stress concentration agrees almost exactly with the experimentally derived values. However, before fracture under torsion occurs, the shaft sections have been so much distorted that the plastic yielding which occurs completely alters the earlier stress concentration effects.

(2) **Effects of Surface Marks.** It has been shown by Thomas, Griffith, and other experimenters that the effect of tool marks, file scratches, and other surface defects is to reduce appreciably the fatigue strength of metal parts.

Although it is difficult to deduce any actual values of strength reduction caused by surface impressions of definite contours and lengths, yet it is known† that in the case of ordinary turned steel parts the fatigue strength may be reduced by as much as 12 per cent; for coarse file marks by 20 per cent; for smooth file marks by 10 per cent; for coarse emery finishes 7½ per cent; for fine emery finishes 3 to 4 per cent; and for fine ground finishes about 4 per cent.

In the case of the usual accidental scratches occurring on machined parts the maximum fatigue strength reduction found is about 16 per cent.

It has also been shown that the larger grooves with a depth of scratch of about 0·005 in. produced a much greater reduction in fatigue strength than the smaller grooves of depth 0·002 in. and even less.

---

* "Reports and Memoranda, Nos. 334, 335, and 399," *Aeron. Research Committee.*

† "No. 860, Reports and Memoranda Series," *Aeron. Research Committee*, 1923.

TABLE 42

SUMMARY OF TORSIONAL STATIC AND FATIGUE TESTS ON SHAFTS CONTAINING A DISCONTINUITY IN THE FORM OF A STANDARD KEYWAY (GOUGH)

			0·65 per cent Carbon Steel			0·02 per cent Carbon Steel (Armco)		
	—		Solid Shaft	Shaft with Narrow Keyway	Shaft with Wide Keyway	Solid Shaft	Shaft with Narrow Keyway	Shaft with Wide Keyway
Static Tests	Values of the stiffness factor	Experimental Calculated	0·00251 —	0·00236 0·00239	0·00229 0·00233	0·00251 —	0·00234 0·00239	0·00222 0·00233
	Torque at limit of proportionality	Experimental (in lb.) Ratio	365 1	276 0·756	276 0·756	122·5 1	95·0 0·776	95·0 0·776
	Stresses at limit of proportionality (tons per sq. in.)	Experimental Calculated (at bottom of keyway)	12·9 —	— 12·3	— 12·6	4·4 —	— 4·3	— 4·5
	Maximum torque at fracture (ratio)	Ratio Experimental	1	0·963	0·945	1	0·954	0·895
Fatigue Tests	Experimental limiting ranges of torque (ratio)		1	0·80	0·80	1	0·88	0·88

Although the effects of surface scratches are not considered to be serious in the case of mild steel, they are apt to become so with harder steels, such as spring steels.

(3) Effect of Clamping Stresses. Where, as is usually the case, metal objects subjected to fatigue effects are securely clamped at one or more places, the stresses caused by this clamping action may have an important influence upon the endurance limit.

In the case of automobile springs of the laminated or leaf type, for example, the clamping occurs at the places of greatest bending moment; in addition the spring blades are generally left rough so that the surface defects present will also tend to reduce the fatigue resistance.

Incidentally, some spring systems have drilled leaves; as we have seen, such changes of section also cause a reduction in the fatigue strength.

The following results illustrate the effects of clamping stresses and surface defects.

TABLE 43

TESTS SHOWING EFFECTS OF CLAMPING STRESSES AND SURFACE DEFECTS (Hankins)

Material	Fatigue Ranges, Tons per sq. in.		
	Specimens of Uniform Width (Clamping Stresses and Surface Defects)	Specimens with Transition Curves (no Clamping Stresses: Surface Defects only)	Specimens with Correct Transition Curves, also Prepared Surfaces
0·6 per cent carbon steel	± 20·0	± 27·0	±38·0
(Hardened and tempered)	(0·53)	(0·71)	(1·0)
Tool steel	± 18·0	± 24·5	± 26·0
(Hardened and tempered)	(0·69)	(0·94)	(1·0)
Mild steel	± 10·5	± 14·0	± 14·5
(Hardened and tempered)	(0·73)	(0·97)	(1·0)

It will be evident from these results that the effect of end clamping is serious in reducing the fatigue range, more especially in the case of the harder (including the usual automobile spring) steels. For the more ductile materials the effect of surface defects is comparatively negligible.

(4) Effect of Frequency. Hitherto we have not been concerned with the frequency or rate of repetition of the applied stresses on the test specimen. Usually the Wöhler test frequency is of the order of 1000 to 3000 cycles per minute, but in order to compare different test data, it is necessary not only to know the frequency, but also the effect of varying frequency upon the endurance limit.

The results of tests* made on mild steel with frequencies of 1300 and 2000 cycles per minute appeared to indicate that at the latter speed the safe range was only 60 per cent of the former.

A large number of tests has now been made by various experimenters, and as a result it has been shown definitely that the *fatigue range under reversed bending stresses* is not affected by cycle frequencies between 150 and 5000 cycles per min., and in the case of direct stresses, frequencies of 2000 up to 6000 cycles per min.

Tests made on a Hahnemann-Hecht machine, giving tension-compression stresses at 30,000 cycles per min., indicated† that an increasing rate of application of the load is accompanied by a small increase in the resistance to deformation.

A comprehensive series of tests made by Prof. C. F. Jenkin with the electromagnetic fatigue testing apparatus described on page 315 employed frequencies ranging from 3000 to 120,000 per min., the specimens being in the form of long rods subjected to reversed bending action.

The materials tested included copper, Armco iron and mild steel (0·27 per cent carbon); all were in the annealed or normalized condition.

The general results of these tests are shown graphically in Fig. 179, whilst some average values for the endurance limits are given in Table 44. Referring to the graphical results, these show the maximum

TABLE 44

Effect of Frequency in Fatigue Tests

Mild Steel		Armco Iron		Copper	
Frequency Cycles/min.	Endurance Limit. Tons per sq. in.	Frequency Cycles/min.	Endurance Limit. Tons per sq. in.	Frequency Cycles/min.	Endurance Limit. Tons per sq. in.
3,000	± 16·3	3,000	± 15·75	3,000	± 4·88
30,000	± 16·85	30,000	± 16·65	30,000	± 5·01
60,000	± 17·35	60,000	± 16·98	60,000	± 5·33
				120,000	± 5·53

---

* *Phil. Trans. Roy. Soc.*, vol. cxcix, 1902.

† *The Metallurgist*, p. 188, 28th December, 1928.

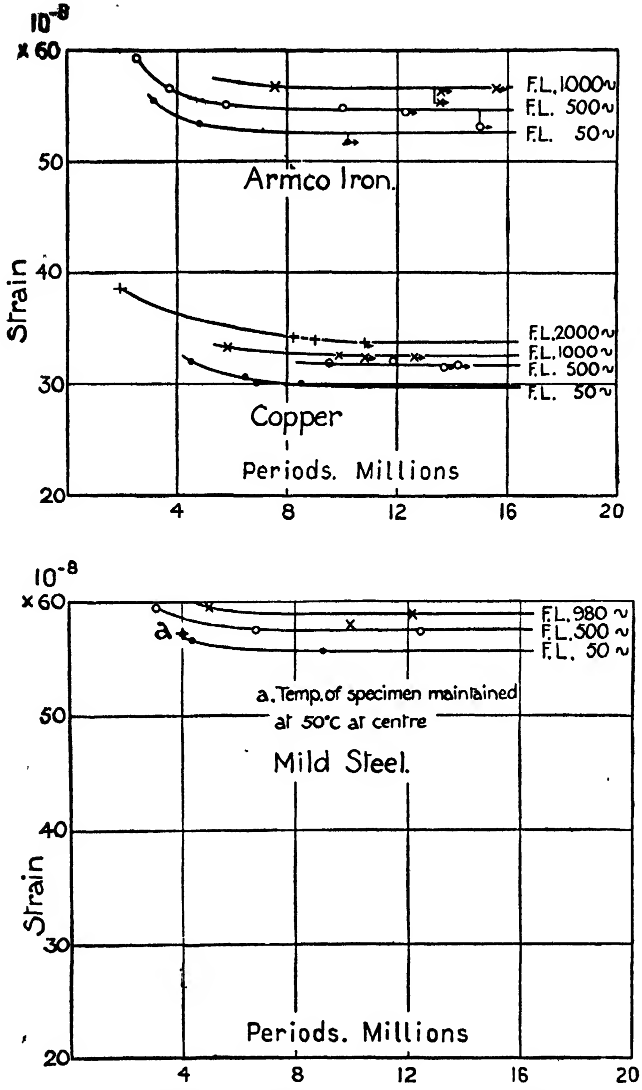

FIG. 179. EFFECT OF FREQUENCY OF STRESS REVERSAL ON ENDURANCE LIMIT

strains as fatigue limits for different durations. Since the stresses, within the elastic limit, are proportional to the strains in the case of the mild steel specimens, the results indicate the manner in which the fatigue stresses are affected by the frequency of stress reversal. For the Armco iron and copper, where the fatigue limits are higher than the elastic limits appropriate values of Young's modulus have been taken, based upon the results of tests.

It will be observed in all cases that there is an increase in *the fatigue limit as the frequency of the stress reversal is increased*, and this indicates that the mechanism of fatigue requires a definite time in which to act. At high speeds the loads which are sufficient to cause fracture have not time to produce the effect, whatever it may be, which causes fracture, and higher loads are required to produce the same effect.

(5) **Temperature Effect on Fatigue Strength.** In view of the fact that many engineering parts are employed under conditions of frequent stress reversals over a wide range of temperatures, from those of refrigerating plant and at high altitudes (in aircraft) to the operating requirements of internal combustion and steam engines, it becomes necessary to take into account the nature and magnitude of the temperature effect upon the endurance limits of the metals used. At the lower operating temperatures the metal tends to become more brittle, so that the determining strength factor is that of its *resistance to shock*.

At the more elevated temperatures, however, the fatigue strength problem is complicated by the flow or "creep" tendency of metals under moderate degrees of stress.

A number of investigations has been carried out on the subject of fatigue testing at elevated temperatures,* but the results obtained are by no means conclusive at the present time.

The subject has been considered and the available results summarized by H. J. Gough† who has pointed out the outstanding fact that *at elevated temperatures specimens will withstand, without fracture, many millions of reversals of a cycle of stress of which the maximum stress greatly exceeds the statical limiting creep stress.* An investigation into the properties of Armco iron at elevated temperatures revealed this result in a rather striking manner. The tensile stress increased to a maximum at about 230° C. from its value at normal air temperature, and then decreased progressively with further temperature increment. The limiting creep stress showed rather similar tendencies, with a

---

* Prof. Lea, *Proc. Inst. Mech. Engrs.*, December, 1924. *Engineering*, 3rd and 10th October, 1924. Tapsell, *Engineering*, 11th November, 20th November, and 11th December, 1925. *Journ. Inst. of Metals*, Vol. 35, No. 1, 1926. *Engineering Res. Spec. Reports*, Nos. 1 and 2, D.S.I.R. 1927 (H.M. Stationery Office). Moore, Bulletins Nos. 152 and 164, Eng. Exper. Station, University of Illinois.

† "Fatigue Phenomena," H. J. Gough, Cantor Lectures, 1928.

maximum value at about 150° C. and diminishing (lower) values for further temperature increments. The half limiting fatigue range stress remained fairly constant up to about 200° C. and then increased until at a little over 300° C. its value equalled that of the limited creep stress. Thereafter the fatigue range stress actually exceeded the creep stress, being nearly double the latter at 450° C.

It may also be mentioned that both Lea and Tapsell have carried out fatigue tests at elevated temperatures in which cycles of wholly tensile stresses have been employed and of which the mean stress has been equal to or greater than the static limiting creep stress at that temperature. The results of these tests showed that a specimen can withstand, without fracturing, many millions of stress cycles whose maximum stress and even mean stress greatly exceed the value of the static limiting creep stress.

Fatigue Strength Thermal Effects. It has been observed during fatigue tests that there is a definite rise of temperature, and investigations have been made to ascertain the range of stress at which there is a definite indication of this heating effect. Tests have been made, using the Haigh machine, by Professor Lea, who observes that "Spurts of heat are by no means a criterion that the fatigue range has been reached except in the case of certain materials. Very perceptible heating may take place and the material then settles down to a cyclical condition and may run millions of repetition without failure. With normalized mild steel the thermo-couple can give a fairly accurate indication of the probable fatigue range for equal plus and minus stresses. On the torsional machines a specimen may become quite hot and then cool, and unless the torque is adjusted it will run for a very considerable time—probably indefinitely."

(6) **Corrosion Fatigue.** An important aspect of fatigue stressing of metal parts in practice, and one that has not always been given the prominence its importance merits, is the effect of the nature of the medium surrounding the metal on the fatigue limit.

Thus, it has been shown that when carbon steel specimens are tested under fatigue stresses, they invariably show a lower limiting range when in contact with a corroding medium, such as salt water or certain chemical solutions. Most other metals and alloys have their fatigue ranges reduced when in contact with corrosive media.

A good deal of useful information on this subject is now available as the result of investigations made by Professor Haigh,* Lehmann,† McAdam,‡ and R. R. Moore.§ A few typical examples will be given to

---

* *Journ. Inst. Metals*, vol. xviii, No. 2, 1917.

† *Rep. and Mem. Series*, No. 1054, October, 1926. H.M. Stationery Office.

‡ *Proc. Amer. Soc.*, "Testing Materials," 1926 and 1927.

§ *Proc. Amer. Soc.*, "Testing Materials," vol. xxvi, part 2, 1926; and vol. xxviii, part 2, 1927.

illustrate the type and nature of the results obtained by some of these authorities.

Professor Haigh carried out a series of fatigue tests on Muntz metal (58 per cent Cu, 41 per cent Zn), naval brass (66 per cent Cu, 32 per cent Zn), and phosphor bronze subjected to reversed direct stresses.*

Various media, including air, ammonia, dilute HCl, and sea water were employed.

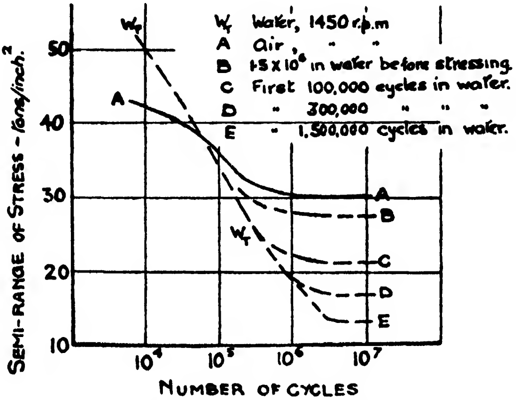

FIG. 180. CORROSION FATIGUE S/N CURVES FOR AN ALLOY STEEL

It was found that in the case of Muntz metal, the ordinary tensile strength was 26·2 tons per sq. in. The limiting range of stress in air was 10·5 and in ammonia 9·1 tons per sq. in.; this represents a 10 per cent reduction in fatigue strength.

In the case of naval brass, a reduction in fatigue strength of 16 per cent was observed; dilute HCl had no influence on the air fatigue strength value.

No detrimental effect was observed in the case of the phosphor bronze when tested in ammonia, dilute HCl, and sea water as compared with air.

Mention was made by Professor Haigh that the fatigue of mild steels and other metals is accelerated when exposed to corrosion by acids, salammoniac, and salt water. McAdam carried out a fairly extensive series of corrosion fatigue tests with a number of ferrous and non-ferrous metals and alloys, using air, fresh and salt water as the media surrounding the specimens.

In one series of tests the specimens were subjected to a stream of salt water (one-third sea water, two-thirds river water). The results of these tests are given in Table 45.

An interesting deduction from these results is that the limiting stress when the specimens were subjected to the saline water stream was reduced from one-third to one-half the value in air, and that for all the steels the final limiting stress after 1½ million reversals lay between ± 11½ and ± 13 tons per sq. in., whereas there was a wide variation in tensile strengths, compositions, and heat-treatments. Other results obtained by McAdam indicated that when carbon steels were tested in air and fresh water, respectively, the endurance limits were reduced by from 10 per cent to as much as 60 per cent.

TABLE 45

Material		Tensile Strength, Tons per sq. in. T.S.	Limiting Stresses Tons per sq. in.				
			Sf	*Spc*	Sc_1	Sc_3	Sc_{15}
0·36% carbon steel	Two Heat treatments	46·3	22·8	20·1	18·3	15·2	11·6
ditto		35·4	15·2	15·0	14·7	13·0	12·1
5% nickel steel		58·0	27·2	—	—	15·6	12·1
Chromium-nickel steel, 0·8% Cr., 1·56% Ni., 0·38% C.	Four Heat treatments	66·4	32·6	29·4	22·8	19·2	13·0
ditto ditto		59·4	29·9	27·2	21·4	17·0	13·0
ditto ditto		51·7	25·9	23·2	21·0	16·5	12·0
ditto ditto		47·3	22·8	20·1	18·3	15·6	12·5

Sf = Tested in air to failure.
Spc = 1,500,000 revolutions in water stream free from load: then stressed in air until failure.
Sc_1 = 100,000 revolutions in water: then in air till failure.
Sc_3 = 300,000 revolutions in water: then in air till failure.
Sc_{15} = 1,500,000 revolutions in water: then in air till failure.

The nickel-chromium and high chromium steels were found to have a fresh water corrosion fatigue limit of ± 20 to ± 23 tons per sq. in., a value that is twice as high as for carbon steels and almost 50 per cent better than for stainless irons.

The following are a few typical results taken from McAdam's published data.

It will be observed that the *best steel for resistance to corrosion fatigue* in salt water is the one containing high chromium and high nickel content. A salt water corrosion fatigue range of ± 15·2 tons per sq. in. was obtained for the 17·7 per cent Cr, 25·3 per cent Ni steel; this was the highest value observed.

The corrosion fatigue curves for certain steels and light alloys are shown in Fig. 181,* in which the full line curves refer to fatigue tests

---

* "The Testing of Engineering Materials," H. J. Gough and W. J. Clenshaw, *Proc. Inst. Marine Engrs.*, Vol. XLVI, Part 10, 1935.

of the reversed bending kind made in salt spray whilst the dotted line curves are for the same materials tested in air.

It will be noticed that whereas the air test curves all tend to approach the horizontal or "number of cycles" lines the salt spray ones bend downwards at much steeper angles. The general nature of such corrosion fatigue curves is indicated in Fig. 182, in which curve *A* relates to the usual air fatigue test results, the curve tending to become parallel to the log *N* axis, whereas curve *B* for the corrosion fatigue results bends downwards continuously, and in no sense tends to approach a corrosion fatigue limit as in the case of curve *A*. It will be observed that the difference between the two curves is a marked one.

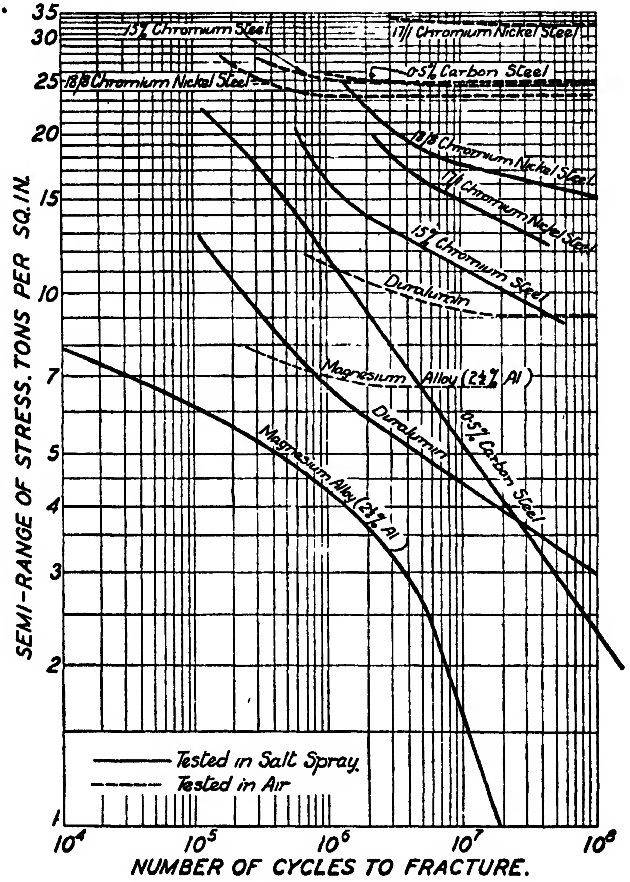

Fig. 181. Corrosion Fatigue Curves for Various Metals

In the case of some fatigue tests* made under reversed stress conditions on similar lines to those of the Haigh-Robertson machine described elsewhere in this chapter, ***single wires of special plough steel*** similar to those used in colliery cables were tested under air and also corrosive conditions, the results being given in Fig. 183. Curve *A* refers to tests made with a spray containing 0·05 per cent formic acid and 0·15 per cent acetic acid. Curve *B* illustrates the corrosion fatigue with tap water spray, whilst curve *C* is for the air test conditions. The fatigue curves are plotted on logarithmic scales. For the dry curve *C*, the fatigue limit is about 28 tons per sq. in. or about one-quarter of the tensile strength. For the curves *A* and *B* there is no real fatigue limit, but a marked reduction in the stress required to fracture after a given number of cycles. Thus, at one million cycles the stress to fracture is about one-half the dry fatigue limit value.

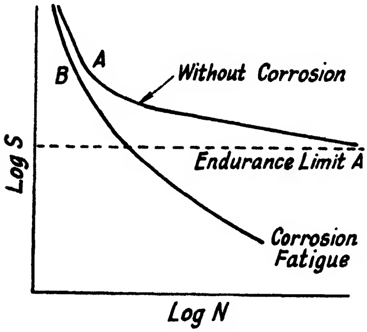

FIG. 182

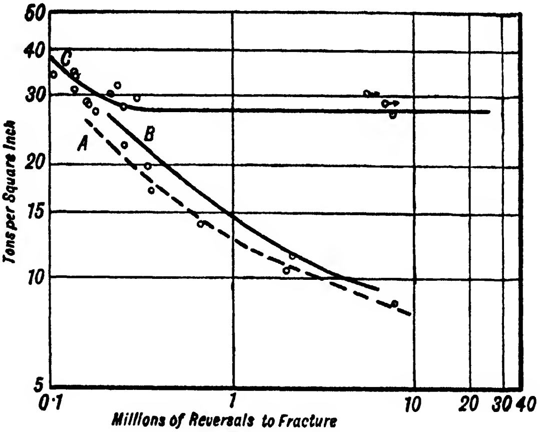

FIG. 183. CORROSION FATIGUE RESULTS FOR PLOUGH STEEL WIRE

Nickel in the pure cold rolled state has its endurance limit reduced from ± 22·4 in air to ± 11·2 in fresh water and ± 10·7 tons per sq. in. in salt water; its tensile strength was 58·8 tons per sq. in. Monel

---

* "An Automatic Electrical Fatigue Testing Machine," C. F. Wray, *The Engineer*, 3rd September, 1937.

metal behaved similarly to nickel, its corrosion fatigue limits being ± 12 and ± 11 tons per sq. in. in salt and fresh water respectively, as compared with 16 tons per sq. in. in air; its tensile strength was 36·6 tons per sq. in.

(7) **Decarburization and Surface Defects.** As distinct from surface scratches and machining marks it has been found that the fatigue strength of steel is reduced by the presence of surface marks caused by heat-treatment; by the presence of a decarburized layer; by surface irregularities of form, presence of scale, small pits, non-metallic inclusions, etc., originating during the manufacturing processes.

Some valuable information on this subject was obtained during a series of tests upon laminated springs that were made by the N.P.L. for the Springs Research Committee.* The researches were mostly carried out on heat-treated laminated springs used in motor vehicles and railway engines and coaches. These springs as received from the manufacturers were found to have relatively low resistances to fatigue stresses, varying from 20 to 50 per cent of the intrinsic resistances of the steel used.

It was found that the causes of this low fatigue strength were the various defects previously mentioned and that if the surface layer, to a depth of about $\frac{1}{16}$ in., was ground off the full strength of the steel was restored. The principal contributory factors were shown to be surface decarburization and irregularities due, in the former instance, to the manufacture and heat-treatment and, in the latter, to the manufacturing process as it is not affected by subsequent heat-treatment.

The influence of these two factors was investigated in the case of chrome-vanadium and silico-manganese spring steels, and in these tests small semi-circular grooves 1/9 mm. deep were employed to represent surface irregularities. The results of some of these tests are given in Table 46.†

These results show clearly that both the decarburized layer and the (notch) irregularities reduce the endurance limit to about 46 to 48 per cent of the clean metal value. Further, the presence of both of these defects together reduces the endurance limit to 24 to 36 per cent of its proper value for the unblemished metal.

In the case of *forged high tensile steel parts* the effect of the surface layer defects caused reductions in the endurance limits varying from 46 to 85 per cent; the full fatigue strength could only be realized in all cases by machining away the surface layers and polishing.

---

* *Nat. Phys. Lab. Report*, 1927.

† Hankins and Becker, *Journ. Iron and Steel Inst.*, No. 11, 1931.

TABLE 46

Effect of Decarburization and Surface Notches on Fatigue Resistance of Spring Steels

Description of Treatment	Endurance Limit (Rotating-bending Test) in Tons per sq. in.	
	Chrome-vanadium Steel	Silico-manganese Steel
1. Surfaces completely machined and polished after hardening and tempering	± 42	± 46
2. Material machined and polished; then subjected to normal hardening and tempering treatment . . .	± 31	± 24
3. Surfaces completely machined and polished and specimens notched after hardening and tempering. .	± 20	± 21
4. Surfaces machined and polished; then decarburized; then hardened and tempered	± 20	± 21
5. Surfaces machined; then decarburized, notched, and finally hardened and tempered	± 15	± 11

Increasing the Fatigue Strength of Manufactured Steel Parts—Shot Blasting

In view of the fact that surface defects such as scratches, decarburized surface metal, forging and other surface irregularities cause marked reduction in the fatigue strength, for by far the greater percentage of material failures in practice occur as a result of fatigue action, it is a matter of great importance to avoid all conditions that tend to produce reduced resistance to fatigue effects.

In general the removal of surface blemishes by grinding or machining is recommended, where production costs are not of primary importance. In the case of ordinary carbon and alloy steels it has been shown that if the *clean surfaces are subjected to a compression effect as by shot blasting* the fatigue resistance is markedly increased. Thus, it is known that fatigue failure is induced more readily in surface tension-stressed parts than in compression-stressed ones. The effect of shot blasting when properly carried out is to *place the outer surface layers in compression*, usually above the elastic limit of the material. This type of surface then resists fatigue failure under loads in excess of the usual values. The existence of such compression stresses after shot blasting has been demonstrated on thin steel strips held in a suitable fixture and restrained from movement. After shot-blasting the specimen, when removed from its fixture, curves inwards on the side that has been exposed to the hardening effect of the shot blast.

When the surface layer is removed by honing the material returns to its normal flat state.

The method of shot blasting is used, commercially, for petrol engine valve springs and clutch springs.

Another method, based upon the stressed skin principle, is that of *burnishing the surface metal.* In this connection a series of tests* has been made on steel rods and shafts, which were tested on a rotating bending fatigue machine. The rods were of 0·3 in. diameter, and in one series of tests the burnishing roller had a 1½ in. radius contour, whilst in another series it had a $\frac{3}{32}$ in. contour. The results of the fatigue bending tests on the rods in these two series of rolling treatments are shown in Fig. 184. The latter also gives particulars of the rolling pressures employed, the surface finishes expressed in micro-inches† and the corresponding rolling pressures in lb. per sq. in. The actual surface contours, as given by a profilograph, corresponding to each of the test conditions are shown below.

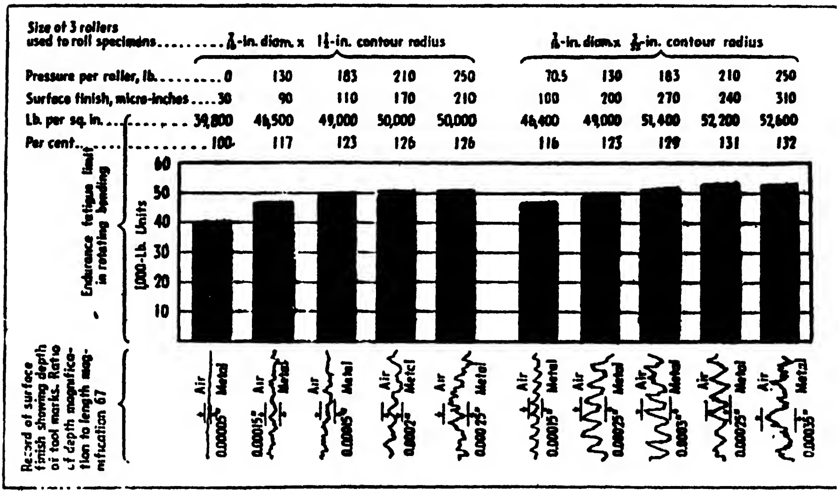

FIG. 184. EFFECT OF BURNISHING ON FATIGUE RESISTANCE

The heights of the black wide ordinates show the endurance limit values in each case. In both of these series of tests it will be observed that the endurance limit increases as the pressure on the burnishing roller is increased, but a stage is reached where very little additional increased fatigue strength is produced by further increase in the roller

---

* "Effect of Burnishing on Fatigue Strength," O. J. Horler. *The Machinist*, 6th and 13th July, 1941.

† 1 micro-inch = one-millionth of an inch.

pressure. The maximum increased strength is about 30 per cent above that of the unrolled bar.

Similar tests have been made with plain and burnished steel shafts of 1 to 6 in. diameter, and the results obtained indicate a similar gain in fatigue strength.

In the case of a stepped shaft of $\frac{7}{8}$ in. and $\frac{11}{16}$ in. diameter having a fillet of 0·4 in. radius the results shown in Table 47 were obtained.

TABLE 47

ENDURANCE LIMITS (ROTATING BENDING) OF STEPPED SHAFTS

Condition	Endurance Limit, Lb. per sq. in.	Percentage
Shaft with polished fillet, but not burnished	29,700	100
Shaft with burnished fillet . . .	50,000	167
Shaft without fillet, but burnished .	56,900	190

It has been the practice in certain American automobile and aircraft factories to roll, or burnish, the keyseat portions of *engine valve stems* to prevent fatigue failures. Similarly, the metal around *transverse holes* in crankshafts that have been treated in a similar manner has shown an increase in fatigue strength up to 38 per cent.

Screw threads, rolled in the bottom portions of the thread so as to compress the metal in the critically stressed region, have had their fatigue strengths increased by as much as 100 per cent.

The eye ends of rods having $1\frac{3}{8}$ in. holes have been increased 50 per cent in the endurance limits by rolling the surface of the hole. When parts such as wheels or pulleys are *shrink-fitted on to shafts,* the fatigue strength of the latter is reduced, but if the surfaces of the shafts are first rolled, their fatigue strengths are again increased.

Effects of Some Other Factors on Fatigue Limit

In making comparisons of test results obtained from various sources it has been found necessary to take into account the *size-effect of the specimen,* since test pieces, geometrically similar and of the same material, have been shown to give different fatigue limits.* Thus, the results of a careful series of tests by Peterson showed that there is a tendency for the fatigue limit to decrease by an amount not exceeding 10 per cent as the specimen increases in diameter from 0·05 in. to 2·00 in.

It is known that whilst the fatigue limit is decreased by surface

---

* "Materials of Aircraft Construction," H. J. Gough, *Journ. Roy. Aeron. Soc.,* 1938.

decarburization it is *increased by carburizing* or *nitriding*, and, as mentioned in the preceding section, *by cold working* the surface of the metal, as in pressure rolling, burnishing, or shot blasting.

In regard to the Izod impact value for a given material there does not appear to be any direct relation to the fatigue limit.

The Stress-strain Loop

It has been shown conclusively in connection with stress-strain tests, repeated a large number of times upon specimens of steel, that the fatigue range depends upon a certain strain produced beyond the value corresponding to that bringing the material into a uniform condition; in other words, if complete cycles of stress are taken, the material after a certain number of cycles gives hysteresis loops that do not increase in area.

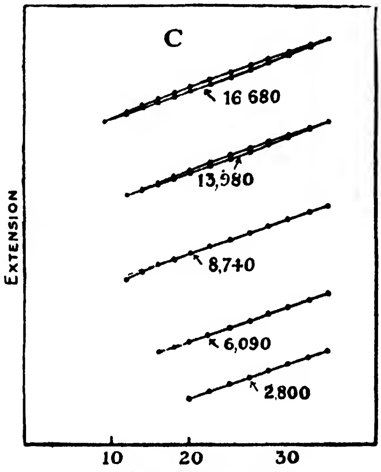

FIG. 185. RESULTS OF FLUCTUATING TENSILE STRESSES

L. Bairstow

Tests made by Bairstow* on reversed and fluctuating tensile stresses of axle steel afford some interesting results in the above connection. In the case of the reversed stress tests it was found that there was a small difference of length of the specimen while loading and unloading at the mean (in this case zero) stress of the cycle. The first stress range applied was ± 14·1 tons per sq. in., and the first loading indicated the material to be sensibly elastic. When the same range of stress was repeated a number of times, the usual linear stress-strain straight line developed into a loop; this was a "hysteresis loop." It was found that at higher ranges of stress the initial width of the loop diminished with repetitions during the early stages of the test. No appreciable permanent extension was found to result from cycles of *reversed* stresses.

Fig. 185 shows a number of graphs illustrating the results of fluctuating tensile stresses in a certain series of tests in which the maximum stress of the cycle was kept constant at 34·4 tons per sq. in., the variations in the ranges of stresses being obtained by reducing the value of the lower limit of stress.

---

* *Phil. Trans. Roy. Soc. Arts.*, vol. ccx, 1910. A summary is given in "Fatigue Phenomena," H. J. Gough. Cantor Lectures, 1928, Roy. Soc. Arts.

Under the first range of stress the specimen was found to have a state of elasticity after an initial yield accompanied by hysteresis effects; this was taken as the safe stress range. When the lower stress was reduced to 15·3 tons per sq. in., neither hysteresis nor further permanent deformation was produced. It was, therefore, concluded that the total deformation due to *safe* ranges of stress depends only on the maximum stress of the cycle.

The results of numerous investigations made by Gough, Hankins, and others on steel, iron, nickel, and copper indicate that the cyclic stress-strain relationships during a fatigue test may be summarized in three distinct stages, as follows. During the first stage of the test relatively large unclosed loops are observed whose widths tend to diminish with subsequent cycles; alternatively, a loop is formed and attains a certain width. During the second stage (which may extend over a million cycles) the loop may maintain a constant width, or may slowly increase or decrease. During the third stage of the test the rate of increase of permanent set and of cyclical permanent set usually increases and fracture results. The first and second stages are common to both safe and unsafe ranges of stress; the third stage is almost certainly connected with the formation and propagation of small fatigue cracks through the specimen, and is associated with unsafe ranges of stress.

It has now been definitely established that a metal subjected to repetitions of a safe range of stress finally achieves a state in which, although no further permanent set will appear, strain hysteresis is present, and will persist indefinitely without causing fracture of the material.

Summary of Hysteresis Effects

From the preceding results and also from more recent investigations the following facts regarding hysteresis effects in fatigue loading, in tension and compression repeated cycles, appear to have been established—

(1) For maximum loading stresses within the elastic limit the stress-strain curve for the first cycles is a straight line.

(2) As the number of cycles is increased the straight line changes into a narrow hysteresis loop (Fig. 185).

(3) Under constant maximum stress conditions this loop at first increases in width but eventually attains a constant size and shape.

(4) After a large number of cycles, in the case of ductile materials, the loop tends to become narrower, due to the loss of deformation on account of the work-hardening effect.

(5) Any increase in the maximum cycle stress causes an increase in the width of the hysteresis loop; this remains constant thereafter if the new stress is maintained uniformly.

(6) The existence of such a loop denotes that permanent deformation has taken place and that during each cycle energy is being absorbed by the metal.

(7) If the stress range is increased above the endurance limit the hysteresis loop gradually increases in width as deformation proceeds, until failure occurs.

(8) The fact that hysteresis loops are produced at very low stress values, namely, from 1000 to 2000 lb. per sq. in. for mild steel, shows that the existence of such loops is no indication of fatigue failure.

(9) If the metal is allowed an interval of rest, for a few days, after repeated stressing it is found that a certain amount of elastic recovery takes place, as shown by the diminished width of the hysteresis loop. Heating the stressed metal to 100° to 150° C. also promotes similar recovery conditions.

Damping Capacity

The fact that energy is absorbed by materials during stress cycles, as revealed by the strain hysteresis loops within the fatigue range, indicates that such materials possess a capacity for damping out the vibratory stresses by the conversion of this energy into heat. Metals of higher ductility possess a greater damping capacity than those of lesser ductility, and the formation of a fatigue crack in any metal depends upon the inability of the material to absorb the hysteresis strain energy. In recent times the subject of damping capacity of different materials has received increasing consideration and, whilst it is agreed that in certain circumstances this quality is undoubtedly a useful one—more especially where resonant vibrations occur—the view is held by some authorities that the benefits of high damping capacity are overrated and, until a good deal of further research is carried out, it is not possible to state conclusively whether there is a definite relationship between *damping capacity* and *notch sensitivity.*

An indication of the damping capacity of a metal may be obtained from the results of tests made upon a rod that is set into torsional vibration of known frequency, the amplitudes of successive vibrations being measured or recorded.

A method of determining damping capacity, due to F. Förster* was to support a metal test bar by two thin wires, one of which conveyed vibrational energy to the bar whilst the other conveyed the test bar vibrations to the receiving system of an amplifier with a current which fluctuated in proportion to the amplitude of the vibrations (Fig. 186). The maximum effect was obtained when the impressed frequency was equal to the natural vibration frequency of the test

---

* *Zeit. fur Metallkunde,* 1937, 29, 109.

bar. The damping capacity was measured from the amplitude-frequency curve under resonance conditions. In the Föppel method, damping is defined as the energy loss per unit volume between two consecutive amplitudes.

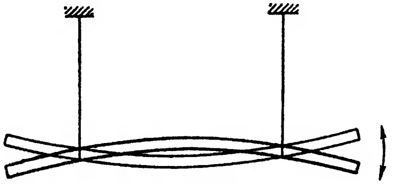

FIG. 186

The results of a series of investigations* into the damping properties of different metals and the effects of various factors on the damping capacity have established several interesting facts, some of which are summarized, briefly, as follows—

(1) For annealed pure iron-carbon alloys the damping capacity and the elastic modulus both decrease with increasing carbon content, as shown in Fig. 187.† This reduction in damping is related to the reduced ductility of the alloy.

(2) The damping capacity is low for metals such as aluminium, magnesium and iron, but high for other non-ferrous metals such as nickel, lead, and tin. Typical values are given in Table 48.

TABLE 48

DAMPING VALUES OF PURE METALS

Metal	Damping Capacity‡ $\times 10^{-4}$	Condition
Aluminium	0·46	Annealed 30 min. at 550° C.
Magnesium	2·10	Annealed 30 min. at 550° C.
Iron	5·60	Annealed 30 min. at 930° C., air-cooled.
Zinc	7·70	Extruded. Annealed 1 hr. at 200° C.
Copper	35·5	Annealed 30 min. at 400° C.
Lead	45·7	Cast.
Tin	54·2	Cast.
Nickel	72·1	Annealed 30 min. at 700° C.

In regard to the high damping capacity of nickel, this is believed to be attributable to the influence of the ferromagnetic state and single crystals reveal similar characteristics to the crystalline metal.

(3) Tests made with a 73/17 copper-zinc brass thermally treated so as to give different granular conditions showed that the damping increased considerably with grain size (Fig. 188). As the resistance to

---

* "Modulus of Elasticity and Damping in Relation to the State of the Material," F. Förster and K. Köster, *Journ. Inst. Electr. Engrs.*, November, 1938.

† "Modulus of Elasticity and Damping Capacity of Iron and Iron Alloys," *The Engineer*, 19th June, 1942.

‡ Förster and Köster units.

deformation decreases with grain size so the damping increases with the deformability. In the investigations with pure iron no influence of grain size was found.

(4) The damping characteristics enable alterations of the stress condition of a metal to be followed in a simple and sensitive manner, without fear of interference due to the method of test. Change in the internal stress can be followed in relation either to time or temperature.

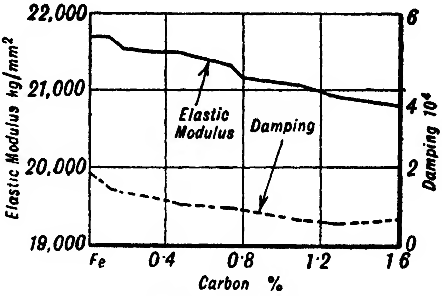

FIG. 187. DAMPING CAPACITY RESULTS FOR ANNEALED IRON-CARBON ALLOYS

(5) Local defects in metals can be determined by the damping measurement method. *Faults of any kind in a material combine to raise the damping* so that cavities, cracks, pores or damage caused during manufacture can be detected. Thus, in the case of ingots for forging weighing about 220 lb., the damping increases by over 500 per cent if internal cracks are present. Self-indicating apparatus enables the damping capacity characteristics to be readily checked at any stage during manufacture, since it is only necessary to strike the metal in order to obtain a reading.

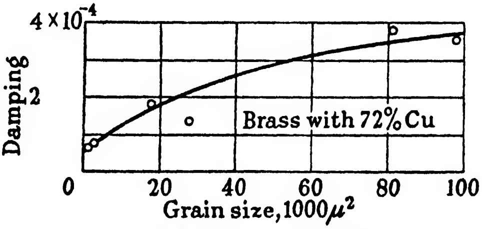

FIG. 188. DAMPING AND GRAIN SIZE

Under certain conditions, the origin of defects can be traced by measuring the damping. If a steel is quenched at too high a temperature for practical use, the damping increases considerably with time after quenching (Fig. 189), the rise being due to the presence of fine hardening cracks. It is not easy to see these cracks in the structure and it is difficult to determine the moment when they are formed. By observing the variation of the

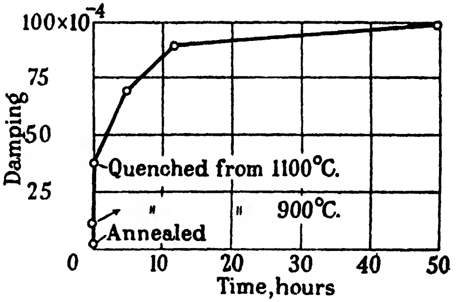

FIG. 189. DAMPING AND TIME EFFECT FOR STEEL

damping it is easy to control the heat-treatment of steel, and if necessary tempering can conveniently be supervised.

(6) Tests made on 0·84 and 1·70 carbon steels, over a range of temperatures, gave the results reproduced in Fig. 190, for damping capacity and elastic modulus. The special feature of the damping curve is the almost constant damping up to about 400° C., followed by a rapid rise up to about 740° C., and a slight drop to 780° C., with subsequent rapid rise at higher temperatures. The sudden change mentioned occurs at the Ac.1 point. The increased damping with elevated temperatures is associated with the increased ductility and creep, and the results serve to throw some light upon the observed high temperature fatigue test conditions.

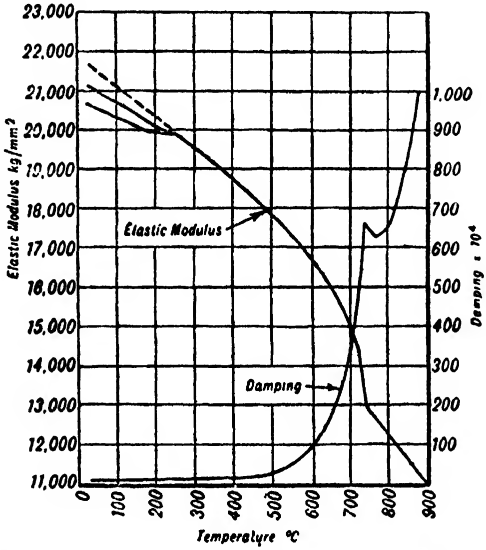

FIG. 190. EFFECT OF TEMPERATURE ON THE MODULUS OF ELASTICITY AND DAMPING CAPACITY OF STEELS CONTAINING 0·84 AND 1·70 PER CENT CARBON

Fatigue Strength from Stress-strain Curves

Attempts have been made, with a view to speeding up the results of fatigue tests, to ascertain whether there is any connection between the stress-strain curve and the fatigue strength. It has been shown by Professor Lea and others that in the case of normalized mild steel the stress-strain curve, when used with care, also gives the fatigue range, for the limit of proportionality of stress to strain is the same as the fatigue range.

Thus, in the case of normalized mild steel tubing tested on the Wöhler machine, the total range of stress for more than 20 million repetitions was ± 13·2 tons per sq. in., whilst the limit of proportionality was from 12 to 14 tons per sq. in. The method has been used for various kinds of materials and tested for long-time runs, but it is not generally accepted that for all materials the stress-strain method on the Wöhler machine gives accurate indications of the fatigue range, except for normalized mild steel.

The Failure of Metal under Fatigue Effects

When a ductile metal is subjected to fatigue action, e.g. by repeated cycles of tension and compression as in the rotating loaded beam method, slip in the crystals occurs, even at low values of maximum stress, as shown by the formation of hysteresis loops. The initial slipping occurs on those crystals that are positioned in the more favourable orientations for such slip to take place. Work-hardening results on these crystals, and this leads to a redistribution of local stresses, since the work-hardened crystals first affected are less responsive to further slip. Other crystals become work-hardened in a similar manner, by slipping under the increased local stresses, and if the maximum fatigue stresses during the cycle are sufficiently great a stage is reached in which the material under the continuous stress reversals will not deform in accordance with the requirements of the hysteresis loop conditions, so that those work-hardened crystals that are more highly stressed begin to break down and a minute crack occurs.

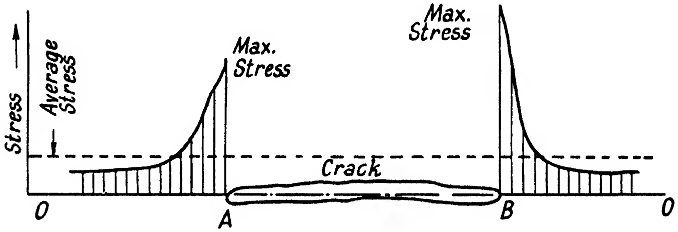

FIG. 191. SHOWING INCREASED INTENSITY OF STRESS AT THE ENDS *A* AND *B* OF A CRACK

Under certain limiting conditions of maximum fatigue stress value such cracks may not produce failure, but if the stress value is above this limit the cracks begin to extend and fatigue failure then depends upon the extension or propagation of such cracks. When such cracks originate they become localities of higher stress concentration as depicted diagrammatically in Fig. 191, which shows a narrow or elongated "hole" or crack in a stressed material and the nature of the stresses in its vicinity; the same type of localized over-stresses occurs around the edges of holes in tensile test pieces.

The propagation of such cracks causes a reduction in the remaining stress-bearing regions of the metal and, therefore, a progressive increase in the stress on these regions, since the maximum load values are constant. The progression of the crack or cracks eventually causes such a reduction of sound metal in the vicinity that the part suddenly fractures.

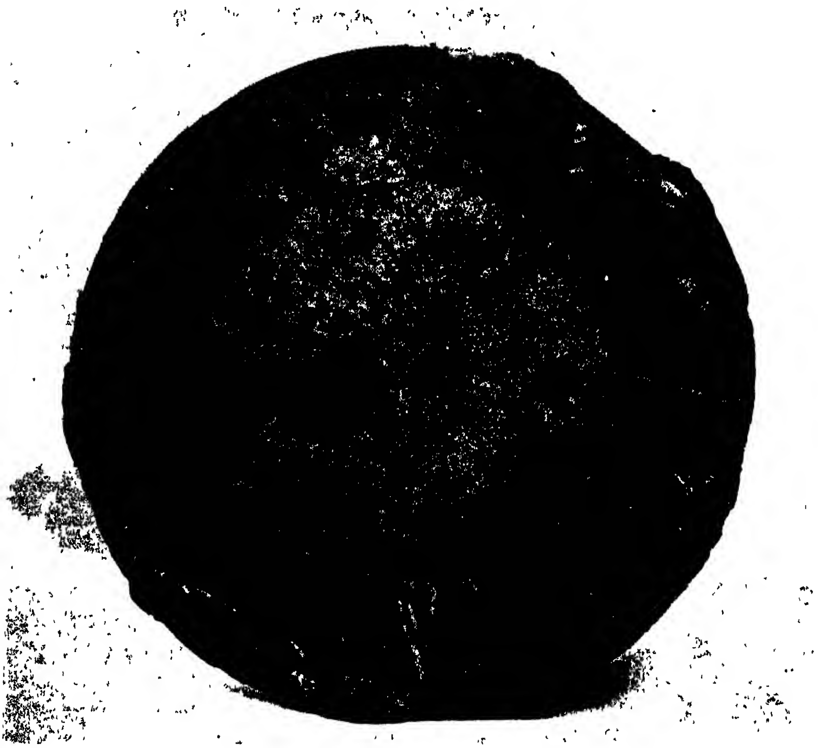

FIG. 192. SECTION THROUGH CRANKSHAFT FRACTURED IN AN ENGINE THROUGH FATIGUE STRESSING, SHOWING THE TWO TYPICAL ZONES OF SUCH FAILURES

(*Gough*)

During the earlier stages of fatigue failure, which in the rotating loaded beam specimen occurs from the surface inwards, the result of the alternating tensile and compressive stresses is to cause a rubbing and hammering action on the two faces of the crack. When the specimen finally breaks, the effect is so quick that the material fractures right across the remaining core section. Thus, a specimen broken by bending fatigue reveals two distinct zones, namely, an inner crystalline surface surrounded by an outer concentric area extending to the outer surface of the specimen having a smooth, battered appearance. The walls of this part of the fractured surface have occasional small longitudinal breaks resembling the ripple marks left by the sea on a sandy shore.

Fig. 192 illustrates the appearance of a fractured crankshaft broken by fatigue stressing; it shows distinctly the two zones of breakdown. The manner in which slip bands occur and fatigue cracks extend under fatigue stressing is well-illustrated in Fig. 193,* which shows three views of a specimen of Armco iron which has been subjected to violent reversals of bending action. The lengthening of the cracks from the upper surface downwards is clearly shown in the two lower illustrations.

In the earlier part of this chapter data have been given to illustrate the influence of various factors affecting the fatigue strength of engineering components. In the light of the preceding account of the mechanism of fatigue failure most of these results can be explained and even predicted in some instances.

The conditions that are liable to cause earlier failure of an engineering part subjected to fatigue effects are clearly those which tend to accelerate the propagation of the initial cracks of overstressed work-hardened crystals.

✓✓It has been mentioned in an earlier chapter that greater stress concentrations occur around the edges of holes and at the roots of screw threads so that when parts having these features are subjected to stress cycles the cracks will tend to originate in these regions of higher stress. It is also known that *small surface scratches, notches, and other irregularities are regions of increased local stresses*, so that under fatigue action the fatigue cracks originate in such localities. The stress concentration effect of a crack, scratch or notch depends upon the curvature at the root of the indentation; the smaller the radius of curvature the higher the local stress value over the mean stress. It is for this reason that sharp notches or Vee-shaped depressions are to be avoided in machine-finished parts that are designed for use under fatigue stresses.

Similarly, internal inclusions of non-metallic matter, minute cracks or cavities should be absent in parts subject to fatigue action. Wherever changes of section occur in engineering parts, the angles should be radiused. Thus Vee-shaped screw threads should have a radiused instead of a sharp root, and changes of diameter of cylindrical parts should not be abrupt, but filleted. Square and buttress screw threads are improved by having a slight radius at each corner. ✓✓

---

* *Vide* page 11.

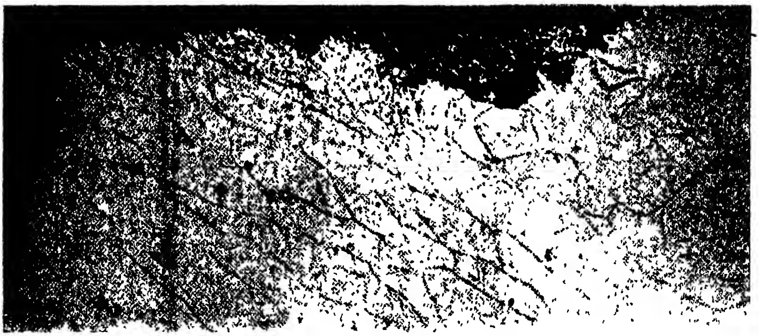

(*a*) UNSTRESSED

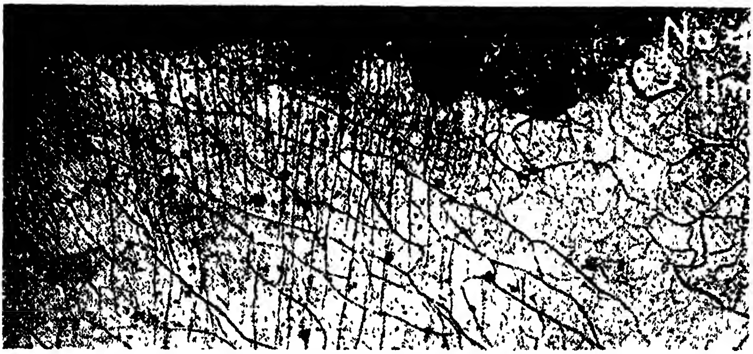

(*b*) AFTER 69 CYCLES OF SEVERE FLEXURE

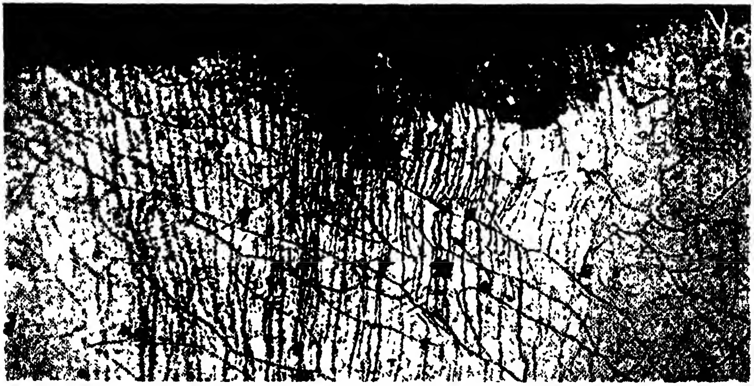

(*c*) AFTER 424 CYCLES OF SEVERE FLEXURE

FIG. 193. ARMCO IRON SUBJECTED TO VIOLENT REVERSED BENDING ACTION

Stress Raisers

Any item, such as an inclusion, internal or external crack or surface blemish that causes a fatigue crack to originate at a lower (maximum) fatigue stress value than for the clean well-finished metal part, is usually referred to as a *stress raiser.*

In regard to the *initial stages of crack formation* in ductile materials it is possible that minute cracks may occur within the microstructure of such materials, and that the earlier slip which takes place at the roots of such cracks may actually strengthen the material locally and add to its resistance to fracture. Further, the reduction of stress at the base of a crack, due to the root becoming more rounded, may prevent any further extension of the crack and thus actually strengthen the material. In the case of the fine-grained *high tensile alloy steels* it has been shown that these are more liable to be affected by the presence of surface scratches, notches and indentations than the more ductile steels, such as the low carbon ones.

Corrosion Fatigue Failure

In regard to *the mechanism of corrosion fatigue,* since the surface layers of most metallic parts under fatigue action are the most highly stressed, any local pits formed by corrosive action act as "stress raisers," and, under fatigue action, minute cracks will tend to form at the base of such cracks, thus reducing the resistance to the applied stresses.

If the material is locally work-hardened under fatigue stress action this material may have different solution properties from those of the unstressed material and corrosion will then often be accelerated. Many metals depend for their corrosion-resistance properties upon the presence of a protective film of oxide or hydroxide, and so long as this film is maintained the metal beneath is immune from corrosion. When, however, such metals are subjected to fatigue effects, such as reversed bending cycles, the protective film is alternately stretched and compressed, a process that may cause it to break down. Once this occurs, corrosion is accelerated as the unprotected metal is then exposed to outside corrosive influences. Although the protective film may tend to reform it is repeatedly subjected to an opening action, and if the cycle frequency and duration are big enough, the corrosion will proceed into the metal and any corrosion pits formed in the surface of the metal will tend to become enlarged and pit cracks deepened, so that the more rapid breakdown of fatigue-stressed parts will occur.

It may be mentioned that *corrosion fatigue may occur in the case of ferrous and other metal specimens tested under fatigue conditions in the ordinary air,* since the latter usually contains corrosion agents, namely, moisture and carbon dioxide; the air in industrial areas usually contains additional corrosive constituents. It is for this reason that higher endurance limits are obtained from tests made under dry air and vacuum test conditions than in ordinary air. It follows, from these considerations, that in the design of fatigue-stressed parts some account should be taken of the conditions in which they will be employed, from the viewpoint of corrosion effects. Thus, if specimens are fatigue-tested in dry air, the results should not be directly applied to components used in contact with sea or ordinary water, in steam plant or the combustion chambers and exhaust systems of internal combustion engines, in chemical plant, etc. In such cases the only safe criteria are fatigue tests carried out under similar chemical and temperature conditions.

Single Crystal Tests

Since it has been found possible, by special means, to produce single crystals of aluminium in relatively large sizes, e.g. several inches long and up to $\frac{3}{4}$ in. in diameter, some important investigations upon the mechanical strength properties of single crystals have been made; further, photo-micrography has also aided the investigations.

The results of some of this work show that tensile or compressive stresses, applied statically or as repeated stresses, cause *slip* on certain planes within the crystal, and it has been shown that when materials consisting of crystal aggregates are subject to repetition stresses, slip bands, similar to those in the single crystal, occur in the material, and it is generally thought that failures are due to shear stresses causing such slips; on the other hand, many failures occur which make it difficult to see how such shear stresses could have been the cause.

In some cases *the plane of fracture* is apparently *the plane of normal stress*, and the fracture obtained from repeated bend tests and also in the Haigh machine, both for brittle and plastic materials, is nearly always on the planes of maximum normal stress. Professor Lea, in summarizing the results of fatigue fracture tests, states that—

"If then the fracture is really a shear fracture it must mean that the slips take place on planes inclined to the planes on which maximum normal stress range occurs, but that the slips are so small that the inclined planes are not observable even under the microscope. That the slips are very small is shown by the fact that fracture can occur in specimens subjected to normal stress ranges without any measurable elongation and when stressed in torsion without any perceptible twist, or in other words, the slips causing final fracture occur only in a few molecules. It is possible, however, for visible slip to occur without fracture. This has been shown clearly in tests from the Haigh machine and from tests on helical springs subjected to a given range of torque, or shear stress in one direction; the springs correspond to torque specimens many inches in length. In such tests creep takes place, but if the specimen is not going to break it may finally cease creeping."

The results of work carried out at the National Physical Laboratory on the microstructure of various metals, including Armco iron, various steels, copper, and nickel under *safe* and *unsafe* stress ranges, including alternating and repeated direct stresses, reversed bending stresses, and reversed torsional stresses extending over lengthy periods, have led to the following conclusions—

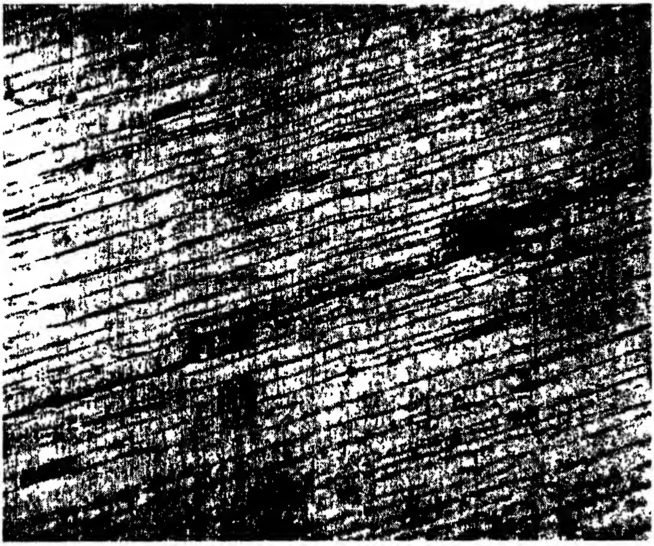

FIG. 194. SLIP BANDS AND FATIGUE CRACKS IN A SINGLE CRYSTAL OF ALUMINIUM

(*Gough*)

(1) Slip bands were found to result from cycles of stress ranges whose magnitude was *considerably less* than the fatigue range. None of the metals tested under the conditions previously mentioned failed to develop slip bands at a safe range of stress.

(2) No marked difference could be detected between the slip bands due to safe or unsafe ranges of stress.

(3) Broad bands were observed, but under high magnification they could be resolved into masses of fine slip bands.

(4) Plastic deformation caused by fatigue stresses was considered to be a strengthening or hardening influence, whereby the resistance to further slip is increased. This hardening occurred when the applied

range of stress was less than, equal to, or greater than the safe range of stress.

Work upon single crystals of aluminium has proved conclusively that the actual slip plane is hardened by slip.

It has also been shown,* from a study of the microstructure of test pieces broken by repeated impact, that if the force of the impact is so small as to produce failure only after a very large number of blows, slip bands of the usual type are produced, the course of the resulting crack usually following a ferrite constituent.

Combined Fatigue Stresses

Whilst there exists a considerable amount of information and data relating to fatigue stresses under tension-compression axial loading and also rotating bending conditions, the engineer is often confronted with loading conditions in which combined fatigue stresses occur; the results of the simple fatigue tests are then no longer directly applicable.

A typical instance of combined stresses occurs in the case of shafts having to transmit power whilst being subject to cycles of bending action, as in the case of *engine crankshafts* and loaded power shafts. The stress cycles in such examples are combinations of bending and torsion loadings, and the components of the combined stresses both alternate about a mean stress of zero and are usually in phase.

The subject of combined fatigue stresses has been investigated to some extent in this and other countries, but a good deal of further investigatory work has still to be done, before sufficient data are available.

In this country much valuable work has been carried out at the N.P.L. by H. J. Gough and H. V. Pollard.† An account of the machine used for these investigations is given on page 323. The results, to 1939, obtained from both ductile and brittle materials are summarized as follows.‡

In general, it has been confirmed that ductile materials conform to an ellipse quadrant

$$\frac{f^2}{f_1^2} + \frac{q^2}{q_1^2} = 1$$

whilst the behaviour of brittle materials may be approximately represented by the expression

$$\frac{q^2}{q_1^2} + \frac{f^2}{f_1^2}\left(\frac{f_1}{q_1} - 1\right) + \frac{f}{f_1}\left(2 - \frac{f_1}{q_1}\right) = 1$$

---

* **Stanton and Bairstow, *Proc. Inst. Mech. Engrs.*, November, 1908.**

† **N.P.L. Reports, 1935 onwards. *Proceedings Inst. Mech. Engrs.*, Vol. 131, 1935, and 132, 1936. *Journ. Inst. Autom. Engrs.*, 1937, No. 6, Vol. 5.**

‡ **N.P.L. Report, 1939, page 58.**

where $\pm f_1$ and $\pm q_1$ are the fatigue limits for pure bending and pure torsion, respectively, and $\pm f$ and $\pm q$ are the ranges of bending stress and torsional stress at the fatigue limit under the combination. This work has all been carried out with plain solid specimens and the results obtained are therefore applicable only to the intrinsic fatigue behaviour of the materials. From the point of view of design data, however, discontinuities of section are of paramount importance, and during the past year attention has been given to this important aspect. The behaviour of specimens containing a sharp circumferential V-notch has been studied for seven steels whose intrinsic fatigue properties were known, the radius at the bottom of the notch being of the order of two ten-thousandths to one-thousandth of an inch. Under combined bending and torsional stresses, the stress concentration effects associated with this type of notch have been found to vary widely from material to material. With a 3–3½ per cent nickel steel, for instance, the strength of the notched as compared with the plain specimens is 68 per cent, and remains practically unchanged under all conditions of stressing, whilst in the case of a 0·4 per cent carbon steel the strength of the notched specimens varies from 54 per cent in reversed bending to 85 per cent in reversed torsion, as compared with plain specimens under similar stress conditions. The *stress concentration factors** for this type of notch with the seven steels have varied from 1·5 to 2·4 in pure bending and from 1·2 to 1·8 in pure torsion, with intermediate values for combined stress conditions. The results obtained, when plotted as independent fatigue data, although conforming approximately to the ellipse quadrant, have been found to afford a much closer agreement with the equation previously associated with brittle materials.

The divergence between the two empirical relationships is only of importance when brittle materials are concerned, or when the ratio of the maximum shear strength under fatigue in pure torsion, as compared with pure bending, is of the order of 1·5 or more. For design purposes it is now considered that the second formula may be applied generally to *ductile, brittle and notched specimens under combined bending and torsional fatigue stresses with zero mean stress.*

Further tests relating to the behaviour of materials under combined bending and torsional fatigue stresses with *variable* mean stress, i.e. with superimposed static bending and torsional stresses, should throw much light on the subject of aircraft engine crankshaft stresses.

Fatigue Tests of Butt-welded Joints in Steels

In connection with tests on welded steel joints a difficulty that often arises is that when standard cylindrical specimens for the Wöhler

---

* The stress concentration factor, K, is defined as the fatigue limit with plain specimens, divided by the fatigue limit with specimens containing a discontinuity.

or Haigh machine are made the outer layers of the weld are machined off and the remaining metal is not uniform in its properties; as a result fatigue test results are apt to be somewhat erratic. Another contributory cause is the possible existence of local defects in the centre portion of the joint.

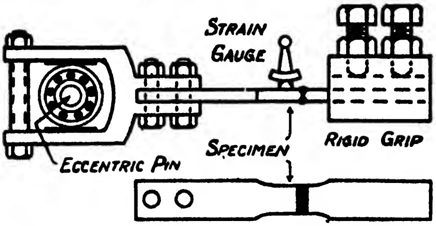

Fig. 195. Method of Testing Butt Welded Joints

A method that has been used with satisfactory results by J. Orr is to arrange the specimen in plate or strip form and to subject it to reversed bending action by the arrangement shown schematically in Fig. 195.* The test specimen, about $1\frac{1}{2}$ in. wide by $\frac{1}{2}$ in. thick, was clamped rigidly at one end and given a to-and-fro movement at the other end by means of an eccentric pin in a ball race, rotating at 1800 r.p.m. The amplitude of the transverse movement could be varied by adjusting the eccentricity of the pin. The stress was measured directly by means of a strain gauge, which was removed before the motor was run at speed. The difference between the stress at normal speed and the stress when the motor rotated slowly was shown to be small, namely, about 2 per cent greater.

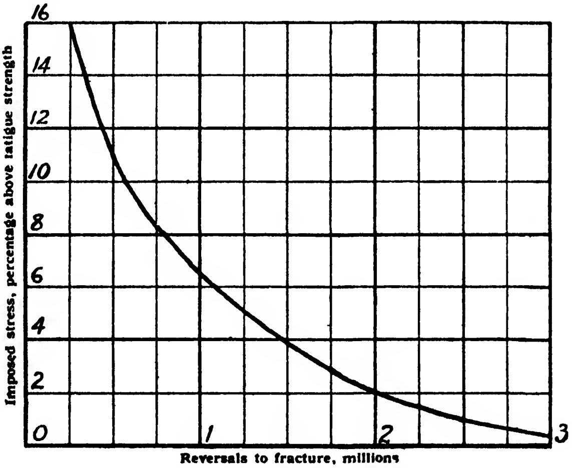

Fig. 196

---

* "Electric Arc Welding in General Engineering," J. Orr, *Inst. Engrs. and Shipbrs. in Scotland*, April, 1935. Reprinted in *Mechanical World*, 19th April, 1935.

Comparative tests upon unwelded mild steel specimens were made on the Haigh and Wöhler type machines and the results were practically identical. In order to reduce the number of specimens that are usually necessary in determinations of the endurance limit, i.e. corresponding to reversed bending tests made with increasing stress range, use was made of the curve shown in Fig. 196 (due to Stanton and Pannell), whereby the fatigue value could be obtained from tests on one or two specimens. If the specimen breaks, the amount of the imposed stress is above the fatigue value as found on this curve.

The results of tests made upon butt-welded joints in mild steel plate in both the "as-welded" and "machined flush" specimens were shown to have the same value, namely, ± 9·5 tons per sq. in.; these were about 80 per cent of the stress value for the parent metal.

For welds in high tensile steels, using mild steel electrodes, the fatigue strength values were from 65 to 70 per cent of the parent metal ones, whilst with special electrodes the fatigue strength was increased to about 80 per cent of the parent metal value.

Impact Fatigue

Hitherto we have discussed the results of fatigue tests made with gradually varying loads, but it will be apparent that another important branch of this subject is the study of fatigue strengths with suddenly applied loads, i.e. impacts.

Such loading conditions occur frequently in practice, more particularly in some of the working members of explosion-type engines, keys and keyways, and screw-threads under shock.

A fairly complete series of tests was made in 1907–8 by Stanton and Bairstow,* using the impact testing machine illustrated in Fig. 198. The specimens used took the form of notched circular bars, and in the tests the energy, in foot-pounds, required to fracture the specimens and the total number of blows taken were measured.

The tests were made upon specimens of iron, mild and medium carbon steels, the results covering a wide series of metals. A good deal of valuable data are given in the original paper referred to. The results of these tests are summarized in the curves given in Fig. 197, in which the energy required to break the specimens after the stated number of blows is plotted against the carbon contents of the steels.

It will be observed that as the energy of the blow is progressively decreased, the number of blows required to fracture the specimen increases. Thus, with 0·4 per cent carbon steel a single blow of about 2 foot-pounds caused fracture, whereas 500 blows of 0·8 foot-pounds, and 100,000 of 0·11 foot-pounds were required in the other cases, on the same material.

---

* Stanton and Bairstow, *Proc. Inst. Mech. Engineers*, November, 1908.

From the original results it is possible to estimate the real fatigue ranges of the materials. Dr. Gough* has made estimations from the available data, and his results are indicated by the dotted lines in the first and last curves in Fig. 197. It is shown from this analysis of the results illustrated in the graphs that *the energies required under one blow bear no relation to the fatigue ranges*; similarly, for the curves up to 750 blows. At 10,000 blows the characteristics of the one-blow curve are practically reversed. After 100,000 blows the energy curve and the true limiting range curve are identical in shape.

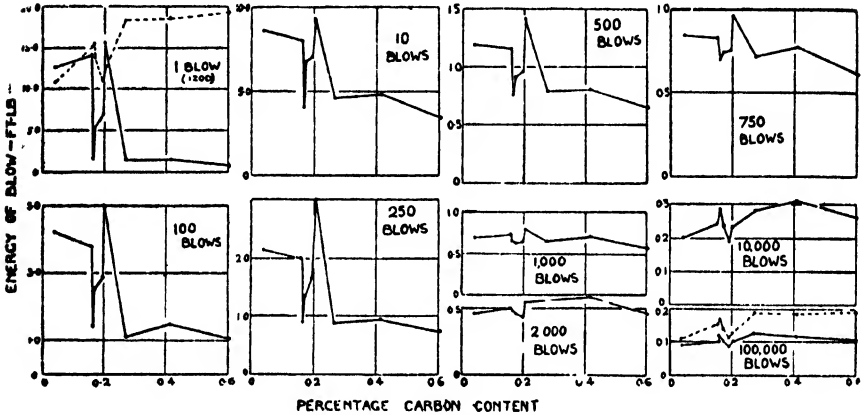

FIG. 197. SHOWING THE RESULTS OF STANTON AND BAIRSTOW'S IMPACT FATIGUE TESTS

It was shown by Stanton and Bairstow that the *limiting proof resilience* of metals under fatigue-impact conditions was proportional to f^2/E, where f = time endurance limit and E is the elastic modulus.

The results of later tests carried out by McAdam† on alloy steels indicate that although no relation apparently exists between the ordinary impact and the impact fatigue values, the ratio of the endurance limit (Wöhler) to the impact fatigue values for all the steels tested is fairly constant, the ratio being 0·90 to 1·00.

The Cambridge Repeated Impact Machine

This machine, illustrated in outline in Fig. 198, was designed by Sir T. Stanton, at the National Physical Laboratory, and made by the Cambridge Scientific Instrument Co.

The specimen consists of a round notched bar *H* (Fig. 198), held in a chuck at one end and resting upon knife-edges at this end and

---

* "Fatigue Phenomena," Cantor Lectures, R.S.A., 1928.

† *Proc. Amer. Soc.*, "Testing Materials," vol. xxiii, part 2, 1924.

at the other, and it is subjected to a series of blows from an almost horizontal tilt hammer *E* pivoted at *G*. Between each blow the specimen is rotated through 180°, so that it receives alternate blows upon opposite sides. The hammer is operated by means of a lifting rod *C*, supported upon a roller *D*, the locus of the end of its path being the oval-shaped curve at *E*. At this end the rod is bent at right angles, so that on the upstroke it engages with and lifts the hammer head. Having reached the top of its stroke, the lifting rod *C* slides forwards and disengages the hammer, which then falls freely upon the specimen *H*.

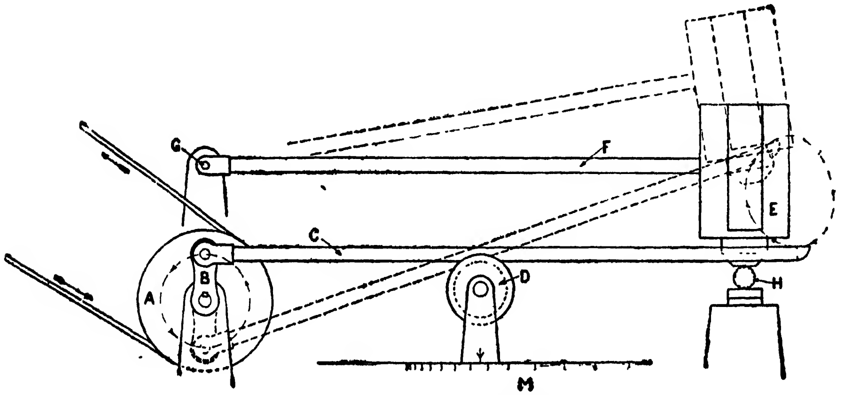

FIG. 198. THE CAMBRIDGE REPEATED BENDING IMPACT MACHINE

The number of blows delivered varies from 70 to 100 per min., and the height of fall can be varied from 0 in. to 3½ in. by sliding the roller bearing *D* along a scale *M*, which is graduated to read vertical heights, directly.

The specimen is usually of about ½ in. or 12 mm. diameter, and is supported upon knife-edges 4½ in. or 114 mm. apart. A simple form of spring mechanism is provided for keeping the specimen stationary during the period of the blow.

The number of blows required to fracture the specimen is taken as a comparative measure of its shock-resisting qualities. A revolution counter, to record the number of blows struck, is fixed to the base of the instrument. When fracture occurs, the specimen falls away, and the hammer head drops on to a steel stop pin, tripping an electric switch on the way, and thus cutting off the electric current to the driving motor.

In making a test, it is usually advisable to adjust the machine to give about 80 blows a minute. If the speed is too fast, oscillation may be set up, while an unnecessary reduction in the frequency of the blows unduly prolongs the test. If the height of the fall is always selected to be one of a standard value (say, 2·5 in., 3 in., or 3·5 in.—6 cm., 8 cm., or 9 cm.), it will be found from experience with different qualities of steels that the particular quality under test will probably break with approximately 1000 blows at one of these selected standard heights of fall. All tests carried out at the same height are strictly comparable, and the number of blows required to fracture the test piece is a measure of the quality of the material.

The shape and size of the notch in the specimen is of great importance, uniformity being essential in any comparative tests. A grooving tool, which has been designed for the purpose of cutting the groove in the centre of the specimen, is supplied with the machine. This tool can be used with a lathe, or the groove may be turned while the test piece is clamped in a vice. A gauge, which fits into a diameter of exactly 0·4 in. (10·16 mm.), is also included.

The Eden-Foster Machine

The Eden-Foster repeated impact machine, which was described in detail in the previous edition of this book, employed a notched or grooved round specimen which was struck by means of a falling vertical hammer and, as in the case of the Cambridge machine previously described, was rotated through 180° between the blows.

With a 5 lb. hammer the specimen could be rotated at any speed up to 60 r.p.m., or with a 2 lb. hammer, up to 90 r.p.m., giving 60 and 90 blows per min., respectively. The height of drop could be varied from 1 to $4\frac{1}{2}$ in. The diameter of the specimen was $\frac{1}{2}$ in. and its length $6\frac{1}{2}$ in. It was provided with a groove of 90° vee angle and $\frac{1}{16}$ in. wide at the surface, giving a core diameter of $\frac{7}{16}$ in. The groove was situated at $2\frac{3}{4}$ in. from one end of the specimen.

The Amsler Repeated Impact Machine

This machine, for making impact fatigue tests under tensile, compression and transverse stresses, employs a vertically-reciprocating hammer which derives its motion from two crankpins fixed adjustably to a common shaft, which is rotated through the agency of a large flywheel driven, by belt, from a variable speed electric motor. For compression tests the specimen is arranged in an upright position beneath the hammer and is struck by the latter as it descends. For tensile tests the ends of the test piece are provided with hard steel collars, one of which passes through an eye in the top of the machine frame, leaving the other in a position where it is struck by the descending hammer so as to provide a tensile impact. The transverse tests are made by supporting the specimen at each end and rotating it slowly so that it is repeatedly struck in the centre of its length by the hammer. It is also possible to arrange for the specimen to be rotated through

180° between each blow as in the Cambridge impact machine previously described.

The velocity of the hammer, and therefore its striking energy, can be varied by altering the throw of the crankpins, or by using the variable-speed control of the electric motor. The hammer gives two blows per revolution of the flywheel. When the test piece fractures the hammer continues its downward movement until it disengages a device which stops the motor and switches on a red warning light.

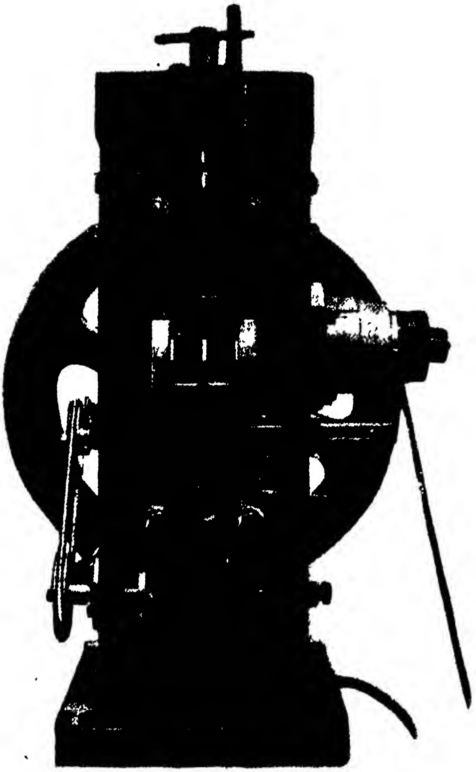

FIG. 199. THE AMSLER REPEATED IMPACT MACHINE

It is considered by some authorities that the machine described gives results which approach more nearly the practical working conditions in service. This method has been used satisfactorily for testing forged bars of high strength aluminium alloys, e.g. R.R. 56, "Y"-alloy, and Duralumin.

A Torsion Impact Testing Machine

A compact design of machine for breaking hardened tool steels by torsion impact, known as the Carpenter machine* and based upon principles developed by Luerssen and Greene, is illustrated in Fig. 200. The machine consists of three different units, namely (1) momentum unit, (2) a laterally sliding head, and (3) a base for housing the flywheel shaft. The momentum unit is shown at *A* and consists of a heavy flywheel mounted on a shaft running in low-friction bearings. It carries on its face two symmetrically-located striking faces. The head *B* which is mounted in guides on the bed can be moved laterally by means of the lever shown at *C*. One end of the specimen is rigidly secured in the head by a set-screw, and the head is so arranged that in

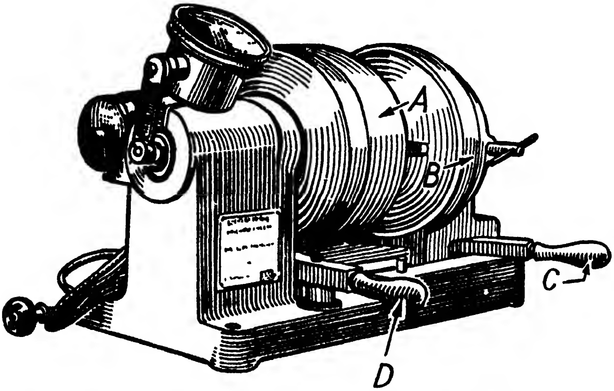

FIG. 200. THE CARPENTER TORSION IMPACT MACHINE

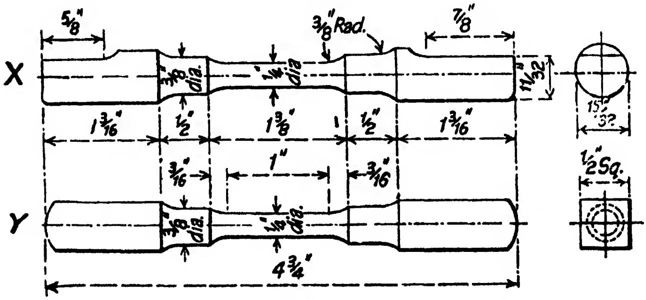

FIG. 201. STANDARD TEST PIECES ADOPTED FOR USE WITH THE CARPENTER TORSION IMPACT TESTING MACHINE. AT *X* IS SHOWN THE FLATTENED END TYPE; *Y* SHOWS THE SQUARE END TYPE WITH ENDS ROUNDED

---

* A. Emery Co., Glenbrook, Conn., U.S.A. (described in *Machinery*, 6th February, 1936).

the extreme left position the specimen just clears the face of the flywheel and when the head is moved to the right it clears the striking bosses. The free end of the specimen is securely attached to a cross-arm, by a set-screw.

The momentum unit is motor-driven through a friction drive controlled by the handle *D*, and is run up to a predetermined speed with the specimen clear of the striking bosses. The head is then sharply moved to the left, bringing the cross-arm into contact with the bosses and breaking the specimen under torsional impact. The residual speed of the wheel is noted, and since the kinetic energy corresponding to various wheel speeds can be calculated from the moments of inertia of the various moving parts, the energy absorbed, in foot-pounds, in breaking the specimen, can readily be obtained from a table supplied.

The test specimens shown in Fig. 201* have been specially designed so as to embody the best features of several variables. A diameter of $\frac{1}{4}$ in. has been selected to ensure a uniformly hardened test section in shallow hardening steels, and a length of 1 in. enables considerable energy to be absorbed without risk of distortion due to heat-treatment.

---

* Courtesy of *Machinery*.

CHAPTER IX

FATIGUE TESTING MACHINES

SPECIAL machines have been designed for testing materials under different systems of reversed and repeated loadings, at various rates of alternation. These include reversed bending, varying direct stresses, different systems of combined alternating stresses, torsional fatigue, and other systems. Some typical machines and methods are described in this chapter.

One of the earliest repeated-stress machines was that employed by Wöhler for testing specimens in reversed bending action—that is, from a positive, through a zero, to a negative bending moment. In this machine the specimen is held in the chuck of a lathe, as a cantilever beam, the outer end of which is loaded through a ball race with a fixed spring or dead weight. Each side of the specimen is alternately in compression and tension once every revolution of the lathe spindle; the number of revolutions before fracture is recorded and the range of stress is estimated from the load and the dimensions of the specimens.

Fig. 202 shows an improved type of Wöhler machine used by the National Physical Laboratory for making tests upon welded steel joints; the principle is essentially that described above.

In this machine the number of alternations could be varied up to 2000 per min., although, as has been already pointed out, there does not appear to be any reduction in fatigue strength due to the high rate of alternation.

The machine illustrated was provided with a revolution recorder for recording up to 10,000,000 revolutions, and was direct motor-driven. The load was applied through a Skefko spherical type ball-bearing to allow the spindle to deflect without affecting the direction of the load. A universal joint was provided between the bearing and the load, and beneath the load-weights was an oil dash pot to damp out oscillations. The hand wheel below the universal joint was provided with a hollow screw through which the load spindle passed and when it was desired to take the load off, or apply the load, the screw was moved up or down to lift or release a flange upon the load rod.

The machine was automatic in action, and once started could be left running, for when the specimen broke the load and its rod dropped through a certain distance and operated a switch breaking the circuit of the electric motor. The specimens used were of 1 in. external diameter, but at the chuck end they were drilled out to about $\frac{7}{8}$ in., in order to reduce the period of the test and to enable a small, compact machine to be used.

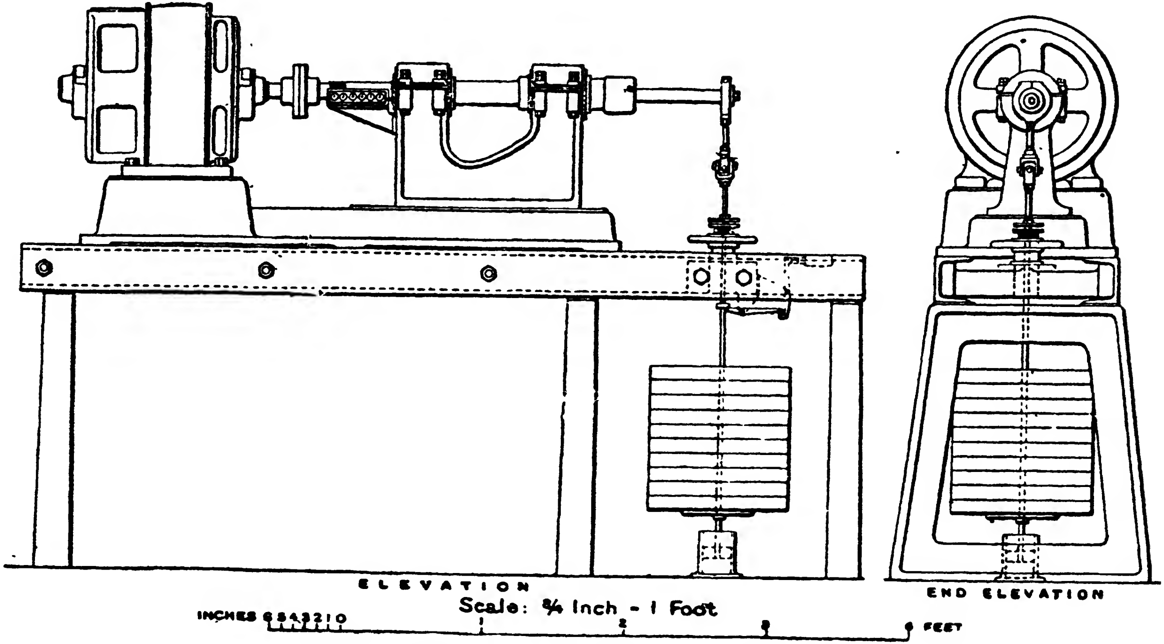

Fig. 202. The N.P.L. Wohler Fatigue Testing Machine

For axle steel, with a range of reversed stress of about 36 tons per sq. in., it was found that about 2,000,000 reversals were required to fracture the specimen with the above type of machine.

A Commercial Wöhler Machine

Fig. 203 shows the commercial prototype of the N.P.L. Wöhler type of testing machine, made by Messrs. Avery, Ltd., Birmingham.

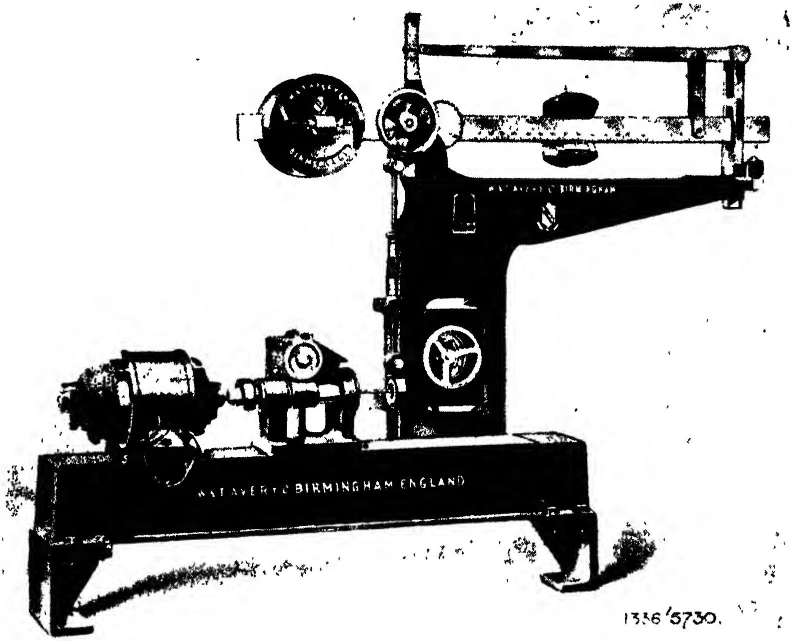

Fig. 203. The Avery Wöhler Type Fatigue Testing Machine

It follows the usual practice in having an electric motor for rotating the specimen, a total revolution and speed counter and a variable loading device.

In this case the load is applied to the free end of the specimen through a universal ball-bearing holder, and is measured by means of a suitably graduated weighing arm.

A special feature of the machine is the provision of a multiplying pointer, by which the fine deflection readings of the specimen can be taken. For this test the poise upon the steelyard is set to successive and equal load readings and the corresponding deflection of the specimen noted. From these results a graph may be plotted by which the fatigue elastic limit of the material can be obtained. This test has the advantage over the test to fracture, as the results can be secured much more quickly—a period of half-an-hour frequently being sufficient.

A duplex type of revolving cantilever beam testing machine of more recent origin, shown in Fig. 204, is designed for making tests upon two specimens at a time, for engineering works routine test purposes. The speed of operation is 3000 r.p.m. It employs simple scale pans, weighing 5 lb. each, and provides for maximum additional loads of 45 lb. each upon a specimen of 0·3313 in. diameter, giving a maximum stress of 25 tons per sq. in., and of 0·2629 in. diameter for a maximum stress of 50 tons per sq. in. The minimum stresses for these diameters by the scale pan weight alone are 2½ and 5 tons per sq. in., respectively.

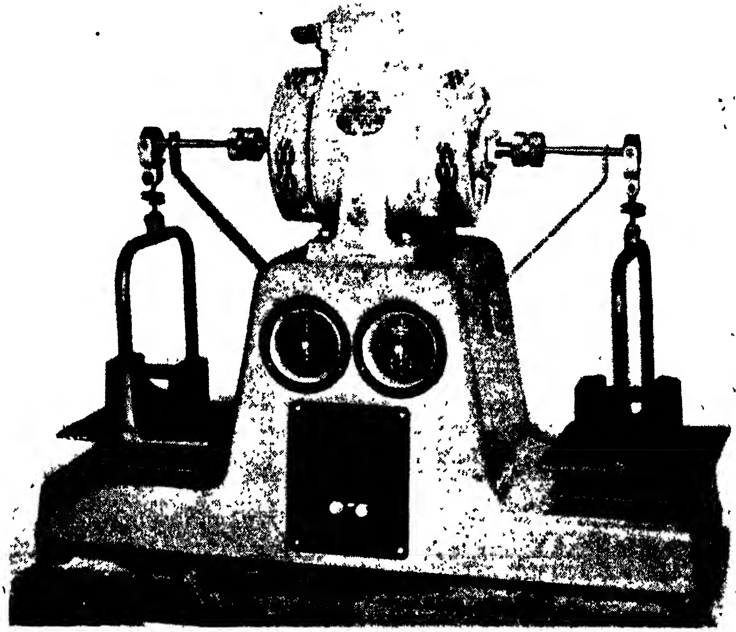

FIG. 204. DUPLEX CANTILEVER FATIGUE TESTING MACHINE

Two stress dial-type counters are provided at the front of the machine to show the total number of stress reversals for each specimen during the tests. When a specimen breaks its counter is stopped by means of a cut-out button under the load pan.

The Avery Reversed Plane Bending Machine

This machine, shown schematically in Fig. 205 and externally in Fig. 206, has been designed for dynamic tests on thin plate specimens of steel, light high-strength alloys, and plastics by the method of reversed bending stresses, with or without an initial static load. It can also be used for round or tubular specimens, or combined torsion and bending tests using the special grips available for these purposes.

The machine, which operates at a speed of 1500 r.p.m., belongs to the class of mechanically-driven bending machines with adjustable amplitude for each set of tests. It uses an electric motor of ½ h.p., with double eccentric, a connecting rod with a driving arm and a measuring arm.

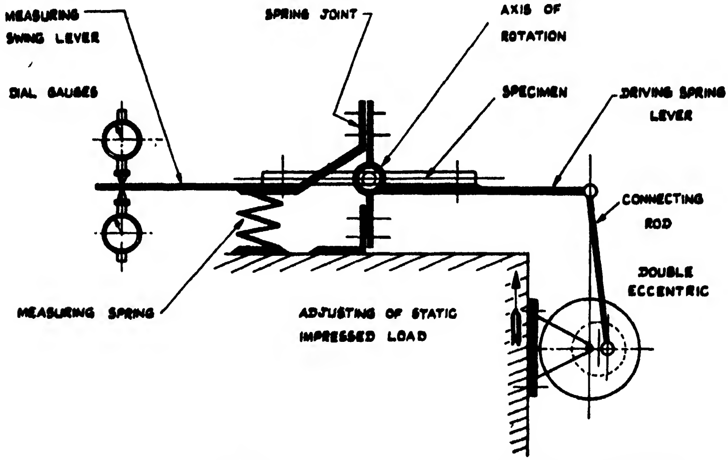

FIG. 205. ILLUSTRATING PRINCIPLE OF THE AVERY REVERSED BENDING MACHINE

As shown in Fig. 205, the double eccentric is fixed to one end of the motor shaft, and can be adjusted when the motor is not working, to give the desired eccentric throw. Driven by the opposite end of the shaft is a revolution counter recording the number of reversals which occur before the specimen breaks. The motor and eccentric can be raised or lowered to vary the static bending stress to which the specimen may be subjected by means of the driving arm. The latter is made to turn about an axis vertical to the longitudinal axis of the specimen in its neutral fibre.

One end of the specimen is held on the driving arm by means of graded linings (to suit its thickness) and by two studs, in such a manner that its neutral fibre lies in the axis of rotation. The other end is connected to the measuring arm, its axis of rotation coinciding with that of the driving arm. To compensate the shortening of the specimen through bending, this measuring arm is mounted on spring joints.

For measuring the bending forces an interchangeable push-pull dynamometer, in the form of a coil spring, is provided beneath the measuring arm. The amplitudes of this dynamometer are amplified by the measuring arm and are indicated on two dial gauges, which are also used to determine the initial static load. The machine is stopped automatically when the specimen breaks, by means of a cut-out switch mounted on the measuring arm; a red signal lamp is illuminated at the same time. The machine gives a maximum oscillation bending moment of ± 125 in. lb., a static bending moment of ± 250 in. lb., a maximum swing angle of ± 12°, and a maximum pre-loading angle of 18°.

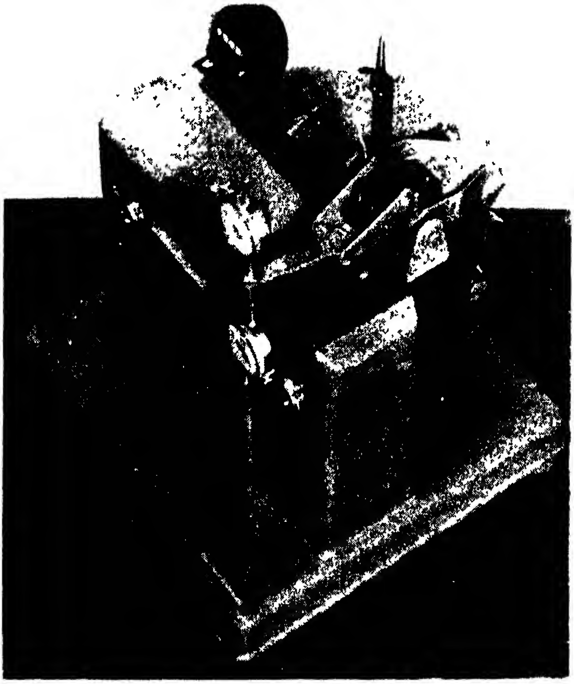

FIG. 206. THE AVERY REVERSED BENDING FATIGUE TESTING MACHINE

The metal plate specimens are $\frac{3}{4}$ in. wide at the narrowest (centre) part of their length ($3\frac{1}{2}$ in.), and the thickness varies from $\frac{1}{32}$ in. to $\frac{1}{2}$ in. according to the resistance of the material. The round specimens have minimum diameters of $\frac{3}{16}$ in. to $\frac{7}{32}$ in. for bend tests, $\frac{1}{8}$ in. to $\frac{1}{4}$ in. for torsion tests, and $\frac{5}{32}$ in. to $\frac{7}{32}$ in. for combined bending and torsion tests.

The Smith Fatigue Machine

Another type of machine devised by Professor J. H. Smith for testing specimens in alternate tension and compression is illustrated in Fig. 207. In this machine a shaft *N*, carrying a pair of flanges *K*, is provided with unbalanced weights *E*, which as the shaft rotates introduce longitudinal and reversed centrifugal forces upon the specimen *BC*, which is clamped at *C*; the specimen thus experiences repeatedly varying stresses. An initial tension may be applied to the specimen by means of the spring *H* and screw device *J*. The shaft *N* is driven off another shaft in the same line with it, through a flanged plate carrying a radial slot driving one of the projections *E*; in this way the specimen receives no driving-action effect.

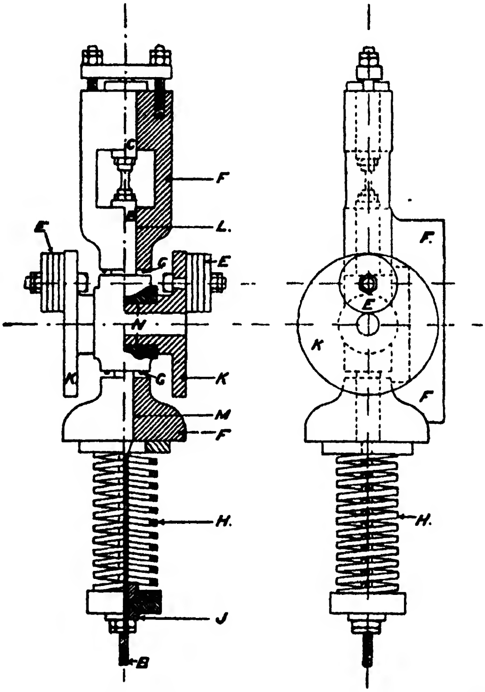

Fig. 207. Professor Smith's Stress Repetition Machine

A machine employing this principle was used at the National Physical Laboratory for alternate tension and compression tests upon one or a number of specimens at the same time. In this type of machine the whole of the rotating parts must be balanced so that the machine and its foundations are not subjected to vibrations.

Figs. 208 and 209 illustrate another type of reversed bending machine, known as the Upton-Lewis fatigue-testing machine.* The specimen, which is of rectangular section ¼ in. × ¾ in., or ¼ in × 1 in., by 6 in. long, is clamped to the jaws *A* and *B* (Fig. 209), thus forming the connection between the two pieces. The jaw *A* forms part of an elbow lever *ADN*, pivoted at *D*, and provided with a pair of compression

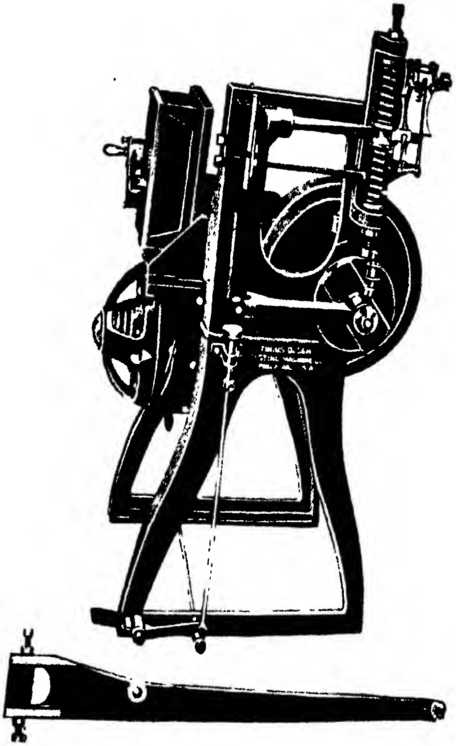

Fig. 208. The Upton-Lewis Fatigue Testing Machine

springs *E* and *F*, which can be screwed up or down so as to give any amount of stress range (one side positive and the other negative).

The reversed bending action is applied to the specimen by means of an eccentric or variable-throw crank *M*, acting through the connecting rod *L* on to the arm *KB*, thus alternately bending the specimen,

---

* Manufactured by Messrs. Olsen, of Philadelphia.

first one way and then the other, against each of the springs *E* and *F* in turn, until fracture occurs.

The machine is fitted with an autographic apparatus that reproduces, to scale, the compressions of the springs (which are proportional to the ranges of stress) as ordinates, and the number of alternations up to fracture, which are taken as a measure of the fatigue resistance for the given range of stress.

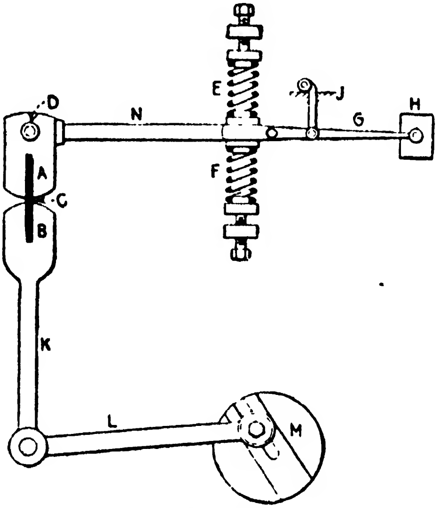

Fig. 209

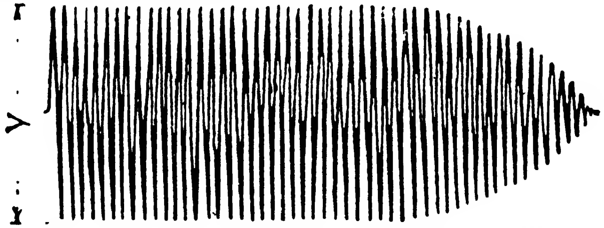

Fig. 210. Record from Upton-Lewis Fatigue Machine

Fig. 210 shows a typical diagram from this type of machine; the vertical distance *Y* denotes the stress range, and the number of repetitions is shown by the number of peaks on one side. The diminishing height of the ordinates after about the fortieth alternation denotes the fatigue breakdown preceding rupture.

Avery Bending Fatigue Machine

Fig. 211 shows an earlier model Avery fatigue testing machine for testing materials in bending fatigue.

The machine is duplex in character, two standard specimens being under load at the same time. Each specimen is spanned between two supports, a prescribed load being suspended at its centre. Both specimens are then rapidly rotated, being driven by a belt connection to a grooved pulley in the middle of the machine. The number of revolutions necessary to fracture the specimens is recorded upon revolution counters, and this is a measure of the resistance of the material to reversing stresses.

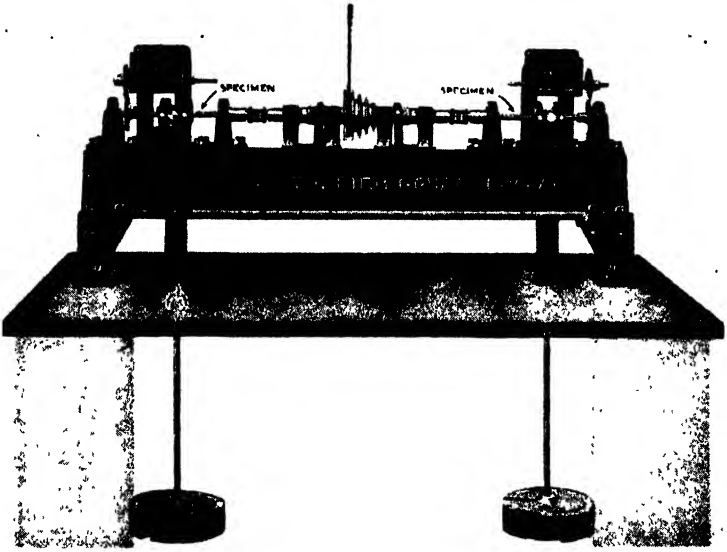

FIG. 211. THE AVERY BENDING FATIGUE MACHINE FOR TESTING TWO SPECIMENS AT THE SAME TIME

The weight applied is arranged so as to produce a prescribed fibre stress, which, as will be seen, is constantly changing from tension to compression, owing to the rotation of the specimen.

The running parts of the machine are mounted upon ball bearings, and provision is made so that the counters are automatically put out of action when the specimens break.

The Haigh Direct Stress Machine

Professor Haigh, who has carried out a large number of fatigue tests upon metal specimens under direct varying stresses, used an electromagnetic method for producing rapid tensile stresses of variable amount. In Fig. 212, showing the principle of the Haigh machine, the specimen S is fixed rigidly at its upper end to the frame.

of the machine; provision is, however, made for adjusting the height of the specimen. The lower end of the specimen is attached to a frame member carrying an armature piece K of a two-phase electromagnet, as indicated at M_1 and M_2. The latter is excited by an alternating current, resulting in an axial pull proportional to the square of the voltage and inversely to the frequency of the current. The rate of application of the tensile stress is twice the frequency of the current.

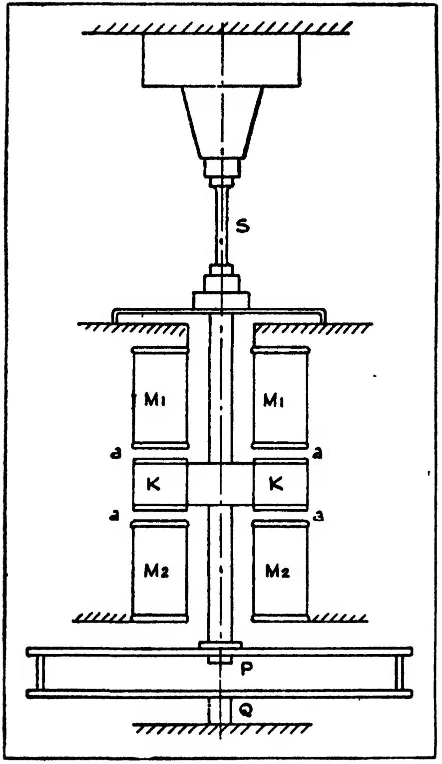

FIG. 212. THE HAIGH DIRECT STRESS FATIGUE TESTING MACHINE

Attached to the lower side of the frame member with the armature K is a bar-spring PQ, which is employed for giving an initial tensile or compressive stress to the specimen. It can also be adjusted to counteract the inertia effect of the armature unit; this is done by altering the springs until the moving parts (without the test piece in position) vibrate in resonance with the pull of the electromagnets.

It is necessary to adjust the air-gaps a between K, M_1, and M_2' very accurately in order to ensure equality of pulls in the magnets. Two secondary coils are fitted close to the pole faces of the latter; the voltage induced is measured and gives the necessary data for estimating the stress in the specimen.

In connection with the use of this machine it has been shown* that errors may occur if it is operated at certain critical frequencies, owing to mechanical resonance in the specimen itself. Under these conditions the form of the stress cycle is far from sinusoidal.

The Sankey Reversed Bending Machine

This machine is a convenient one for carrying out workshop reversed bending tests by hand, and consists of an appliance for

* "The Action of the Haigh Fatigue Testing Machine," *The Engineer*, 30th May, 1941.

bending the specimen backwards and forwards through a fixed angle of 1·6 radians (= $91\frac{1}{2}°$) until it breaks. An autographic device records the maximum bending moment and the number of alternations, as a number of parallel strokes, somewhat similar to the records from the Upton-Lewis machine. The arrangement for measuring the bending moment consists of a flat spring *B* (Fig. 213) clamped at one end *A*, and carrying at the other a grip *C*, between which and the bending lever *E* (which is about 3 ft. long) the specimen *D* is inserted. The grip *C* actuates, by means of the cords or wires *L* and *M*, the pencil *H*, recording the bending moment ordinates.

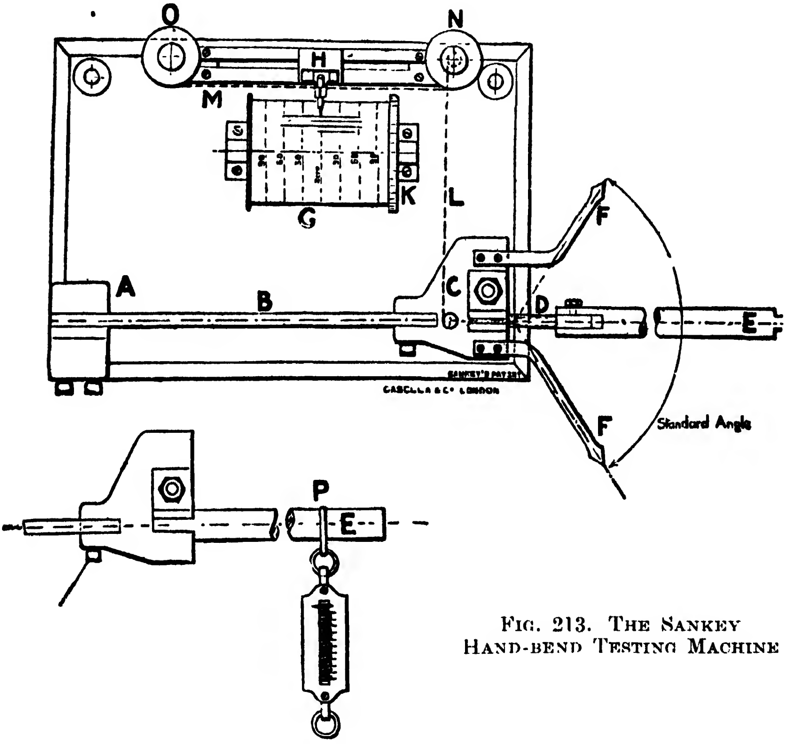

Fig. 213. The Sankey Hand-bend Testing Machine

The test procedure is to bend the specimen slowly, by means of the lever *E*, until the yield point is indicated by a distinct jerk or stretching, when the drum is rotated by hand, whilst still maintaining the yield pressure; this ensures the recording of the yield bending limit. The bend is now completed to the standard angle, as indicated upon the dial *FF*, and the bending reversed to the other limit, and so on, until the test piece breaks, the angle of fracture being noted upon the graduated sector *FF*. The spring *B* is calibrated by applying a known bending moment to the end of the hand lever *E*, at *P*, by means of a spring balance, and adjusting the length of the spring *B* until the recorded moment upon the drum corresponds with that of the spring balance. The energy required to rupture the specimen is given by—

E = 1·6 × No. of Bends × Mean Range of Bending Moment.

The Yield Stress = 0·645 × Initial Yield Bending Moment.

The Ultimate Stress = 0·645 × Maximum Recorded Bending Moment.

The specimens employed have a free length of $1\frac{3}{4}$ in.

The Schenck Fatigue Testing Machine

This machine enables reversed axial compressive and tensile, or "push-pull," tests to be carried out either alone or in conjunction with an initial static tensile or compressive load. By the use of special accessories it can also be used for reversed bending tests. The machine* is made in the 6 and 20 tons maximum load capacities, the former being for tests upon specimens of materials and the latter for full-sized parts within its range, e.g. crankshafts.

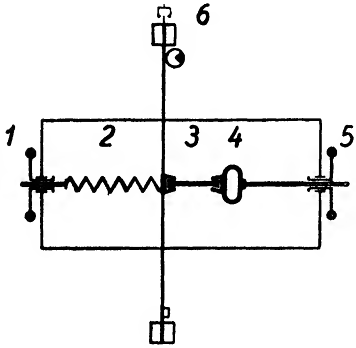

FIG. 214. PRINCIPLE OF THE SCHENCK FATIGUE TESTING MACHINE

1 = Adjustment of initial static load.
2 = Springs for applying static stresses
3 = Specimen.
4 = Loop dynamometer.
5 = Adjustment to length of specimen.
6 = Regulation of amplitude.

The principle employed is that of dual-mass resonance, one mass being formed by its oscillating system and the other by the machine base, as shown in Fig. 214.

The cross spring beam is oscillated by an exciter unit consisting of a flexible shaft which drives an out-of-balance rotor at one free end of the beam. The other free end is compensated by a weight in such a way that the two halves of the spring beam have exactly the same natural frequency.

The test piece grips are connected to the oscillating beam, and the test piece is thus subjected to axial push-pull stresses, the oscillations being transmitted to the loop dynamometer through the test piece. The number of stress cycles varies between 2600 and 2900 per min. An increase of the motor speed causes an increase of the amplitude of the cross beam, and thereby an increase of stress. The test speed is thus principally dependent upon the frequency of the beam, the lasticity of the test piece being without influence.

---

* W. & T. Avery, Ltd., Birmingham.

The process of applying the load can be observed during operation by means of a microscope connected to the dynamometer. Two cut-out switches stop the machine and the counter when the specimen breaks or when the amplitude becomes excessive, so that the machine can run practically without attendance. The machine is so adjusted, and the masses are so tuned against one another, that deleterious vibrations are, it is claimed, completely eliminated. It works on the rising portion of the resonance curve, avoiding the peak of resonance. The advantage of this arrangement is that the machine is far less susceptible to alterations of the frequency than is the case with machines working on the peak of resonance.

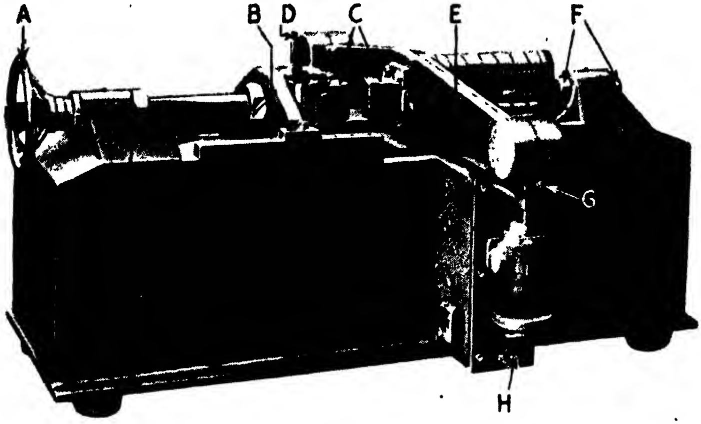

FIG. 215. THE SCHENCK FATIGUE TESTING MACHINE

To increase the test accuracy further and to make the machine, as far as possible, independent of current fluctuations, a special amplitude regulator is provided which automatically keeps the amplitude constant.

The range of the 6-ton machine is ± 3 tons and that of the 20-ton one is ± 10 tons. As these machines are of the resonance type they require only low power driving motors, namely ½ h.p. and 1 h.p., respectively. It is unnecessary to use special concrete foundations as the machines are supported on rubber blocks, but the floors should be level. A further requirement is that the machines should be arranged so as not to be affected by vibrations from any other machines in the vicinity. The method of operation is as follows—

Fix the desired grip holders (*C*) (Fig. 215) in the machine by means of the four large bolts in each. Wind the crosshead (*B*) back by means of the hand wheel (*A*) to enable the specimen to be inserted. Adjust the crosshead so that the specimen is fully engaged in the grips and see that it is centrally disposed vertically. Tighten up securely. Switch on the illumination of the microscope (*D*). Take the zero reading of the microscope and the reading of cycles on counter (*H*).

To set the static load read off on the calibration graph the value in divisions for the load desired. Adjust the static springs by means of the large nuts (*F*) until the microscope shows the appropriate reading. Start the motor generator set or close the main switch on the switchboard, and switch on the D.C. driving motor of the machine.

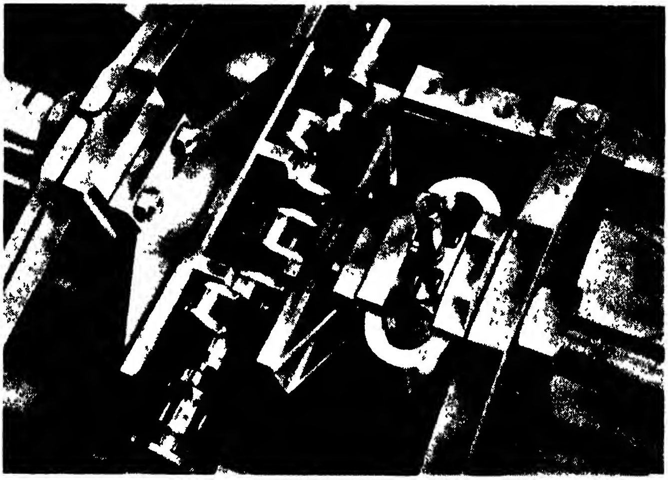

FIG. 216. SHOWING AUTOMOBILE CRANKSHAFT UNDER TEST IN THE SCHENCK MACHINE

Adjust the amplitude of oscillation of the cross spring beam (*E*) by means of the screw regulator (*G*) until the microscope indicates the number of divisions which corresponds with the desired pulsating load, as shown on the calibration graph.

Fig. 216 shows a complete automobile crankshaft under test in the Schenck machine.

High Frequency Fatigue Testing

The cycle frequency of the mechanical type of fatigue testing machine is usually limited to about 60 stress reversals per sec., so that when much higher frequencies are required electromagnetic methods have to be employed. Further, in order to reduce the power needed to operate such machines the principle of resonance is generally employed. In this method the test specimen, in the form of a bar of length about 30 times its diameter, is supported freely near its ends as a beam and transverse forces are applied at a frequency equal to the natural transverse vibration frequency of the bar. Thus, the bar behaves as a vibrating spring and the amplitude of its vibrations can be varied so as to give values that will ultimately cause fracture when a certain large number of vibrations have been applied.

This method has been employed by Professor C. F. Jenkin* in connection with an investigation into the effect of frequency of load application upon the endurance limit of materials, to which reference is made in another part of this chapter.

As the natural transverse vibration frequency of a rod varies inversely as the square of its supported length or span, the lower frequencies correspond to the longer rods and the higher ones to the shorter rods. The following formula applies to such cases—

$$\text{Frequency (per sec.)} = 3{\cdot}561 \frac{k}{L^2} \sqrt{\frac{Eg}{\rho}}$$

where k = radius of gyration of cross-section of bar, L = length, E = Young's modulus, g = acceleration due to gravity, and ρ = density (all in ft. lb. sec. units).

Other formulae derived from the equation of motion for a uniform free bar vibrating on its node† are as follows—

$$\text{Maximum bending moment} = \frac{29{\cdot}23\,EIa}{L^2}$$

where I = moment of inertia of cross-section of bar, and a = amplitude of mid-point of bar.

$$\text{Maximum stress} = \frac{14{\cdot}61\,Eda}{L^2}$$

where d = diameter of bar.

$$\text{Distance between nodes} = 0{\cdot}5516\,L$$

For a maximum stress p (lb. per sq. in.), length L (in.), Young's modulus E (lb. per sq. in.) and bar diameter d (in.) the amplitude is given by

$$\text{Amplitude} = \frac{0{\cdot}06842\,pL^2}{Ed}$$

For a bar of 0·5 in. diameter and length 18 in., with $E = 10 \times 10^6$ lb. per sq. in., the amplitude is equal to $0{\cdot}000001478p$.

---

* "High-frequency Fatigue Tests," Prof. C. F. Jenkin, *Aeron. Research Comm. R. and M.*, No. 982.

† *The Electromagnetic Fatigue Tester*, Salford Elect. Inst., Ltd.

In the specimens used by Professor Jenkin the lengths varied from 19·4 in. down to 2·54 in. with corresponding vibration frequencies of 50 to 2000 per sec. The arrangement employed is shown in Fig. 217, wherein the test rod is supported at the nodes in brass trunnions so that it can vibrate freely. The trunnions are attached to the frame by bundles of copper wire which twist backwards and forwards as the test piece vibrates; these wires also serve to conduct the alternating current along the rod, from one trunnion to the other. The test piece is arranged in this manner between the poles of an electromagnet which produces an approximately uniform field normal to it. The alternating current flowing along the rod thus causes it to vibrate in the magnetic field. Thus if *AB* represents the rod resting normally on free supports at its nodes *FF*, the mode of vibration produced by the combination of the magnetic field and the alternating current will be as shown in Fig. 218.

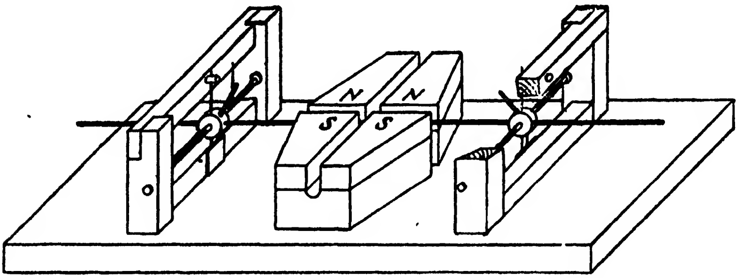

FIG. 217. HIGH FREQUENCY FATIGUE TESTING MACHINE
(Prof. C. F. Jenkin)

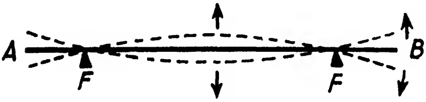

FIG. 218

By adjusting the frequency of the current, using a thermionic valve connected to an oscillating circuit consisting of an inductance and capacity, so as to be exactly equal to the natural frequency of the test piece, the vibrations can be maintained at a very low expenditure of power.

The amplitude of vibration was measured by means of a microscope. ***The amplitudes required to break copper rods*** of 0·105 in. diameter were as follows—

Frequency, in cycles per second . .	50	500	1000	2000
Amplitude, in millimetres . . .	2·8	0·3	0·162	0·08

For *mild steel* (0·27 *per cent carbon*) *rods* of 0·104 in. diameter, normalized at 850° to 880° C., the values were—

Frequency, in cycles per second	50	500	1000
Amplitude, in millimetres	7·85	0·808	0·42

In regard to the endurance limit periods with this method it was found that the low frequency tests at 50 cycles per sec. lasted 55 hours or less; the tests at 500 cycles per sec., 2¾ hours or less; and those at 2000 cycles per sec., 83 minutes or less.

The maximum frequency limit with this method was found to be about 2000 cycles per sec., as above this frequency the rods became too short for the method adopted. In order to operate at higher frequencies, namely up to 5000 per sec. an electromagnetic torsional method was adopted. An account of the apparatus employed is given in the Report mentioned in the upper footnote on page 315.

The G.E.C. Electromagnetic Fatigue Tester

This machine employs a similar method to that used in the case of the Jenkin's apparatus mentioned previously. The specimen rod or bar to be tested is usually one of ½ in. diameter by 18 in. long and is supported at its two nodes and vibrated electromagnetically so that it resonates, a method which allows a very large number of cycles of stress to be applied to the bar in a relatively short time. By measuring the deflection of the bar at an antinode, the actual stress applied can be calculated using the modulus of elasticity E, which can be determined from the frequency of the vibrating bar; the number of cycles applied to the test bar before failure can be indicated by a recorder. It may also be noted that a means of tripping the whole gear is provided to operate on the occurrence of a crack in the specimen. More than one bar may be vibrated at once by providing several units, and the different failure times caused by varying the stress on each can all be indicated on the chart of one recorder.

The complete apparatus comprises three parts: (1) The bar holder and electromagnets; (2) the power supply unit; and (3) the recorder (not essential). Items (1) and (3) are illustrated in Figs. 219 and 220 respectively.

The bar (of whatever material) is supported in vee notches and is rubber covered at these points to obviate chattering due to the imperfection of the mechanical contact. For non-ferrous metals, it is necessary to provide steel sleeves over the test bar in the region of the exciting magnets, and a small steel clip in the centre for the pick-up.

The electrical circuit uses an A.C. supply, which is transformed for filament heating and rectified for supplying the gas-filled relay anode and the D.C. polarizing magnets. The electromagnets for vibrating the bar consist of two pairs of coils on two iron circuits. One pair of these coils is excited by D.C. and provides a constant

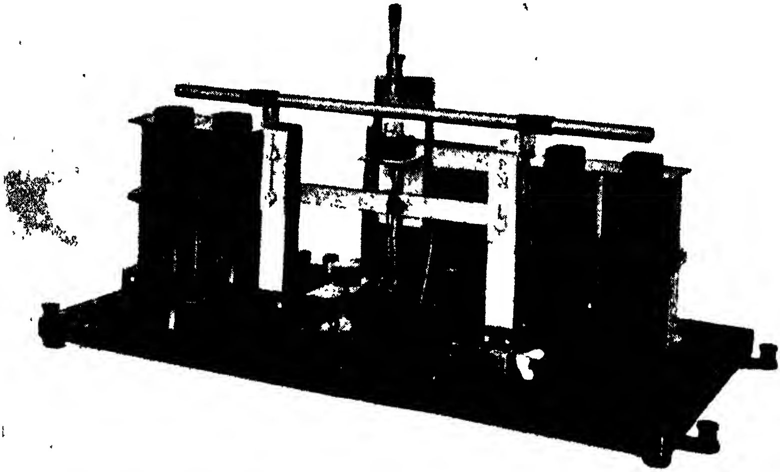

FIG. 219. THE G.E.C. ELECTROMAGNETIC FATIGUE TESTING UNIT
(*Salford Electrical Instruments, Ltd.*)

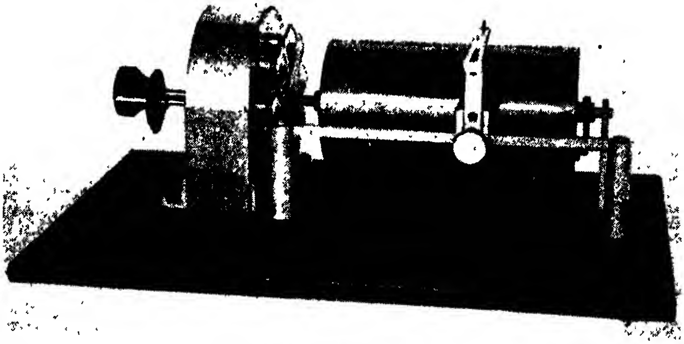

FIG. 220. THE G.E.C. ELECTROMAGNETIC FATIGUE RECORDER UNIT

polarizing field. The other pair is excited by alternating current from the gas-filled relay circuit, in which the relay with its condensers and inductances forms a variable frequency oscillator. This oscillator can be adjusted so that the electrical frequency corresponds to the mechanical natural frequency of the bar; when this occurs the bar resonates

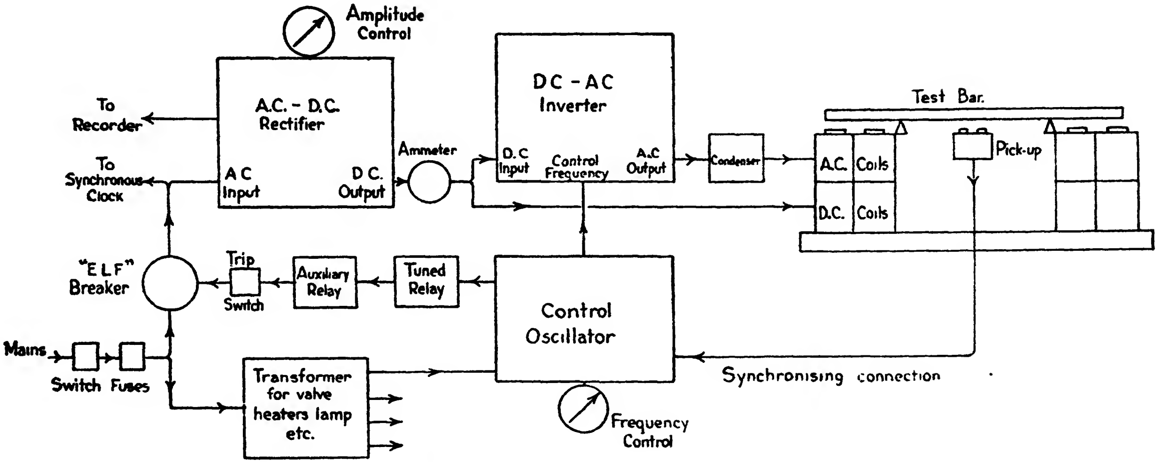

FIG. 221. SCHEMATIC DIAGRAM OF ELECTRICAL CONNECTIONS FOR THE G.E.C. FATIGUE TESTING MACHINE

with a relatively large amplitude, and is held in synchronism (vibrating at the same amplitude even when the applied voltage varies or the circuit constants alter slightly) by means of a pick-up under the centre of the bar, which is connected in the grid circuit of the relay.

In order to trip the circuit on a crack occurring an auxiliary vibrator is provided. This vibrator comprises a length of steel spring, the tension of which can be adjusted to vary the natural frequency; it is excited from the same circuit as the main A.C. coils. After tuning the main circuit the auxiliary vibrator is tuned by varying the tension and then detuned slightly by a half-turn backwards of the tension screw, the natural frequency being thereby lowered so that no appreciable vibration occurs. On a crack appearing in the specimen, the natural frequency is reduced, and the auxiliary vibrator comes into action, vibrating with an amplitude sufficient to touch a fixed contact; this closes a local circuit and short-circuits parts of the resistance in the grid-filament circuit, causing the gas-filled relay to take an increased anode current, which trips a small circuit breaker. The unit is thus shut down, and the corresponding pen of the recorder is lifted up so that the record indicates the point at which the particular bar has failed.

The recording drum (Fig. 220) is driven by a synchronous motor, supplied from the oscillator that vibrates the lowest stressed bar. As the time of operation or the number of cycles endured varies over wide limits a logarithmic scale of cycles is necessary in order to cover the range, which, for steel bars, may be taken as about 10^4 to 10^8 cycles.

The ½ in. round steel bars of 18 in. length of the standard G.E.C. fatigue tester have a natural frequency of between 250 and 300 cycles per sec.; modifications of distance between centres, etc., are required for other dimensions. The apparatus may also be adapted to deal with non-uniform loads and the application of a fixed bending load or torsion at the same time as the vibratory stress.

Machine for Fatigue Testing of Wire or Rod

The testing of wire or lengths of small diameter rod under fatigue bending conditions involves certain difficulties in connection with the holding of the specimens and the application of the loads. In regard to the gripping of the specimen, in the usual Wöhler method of fatigue testing, the part under load has a reduced diameter outside the chuck so that it breaks away from the latter. In the case of parallel rods or wire, it is not convenient, for routine tests, to reduce the diameter outside the chuck portion so that fracture almost invariably occurs at or near the grips, owing to the local concentration of stress. A further reason for not reducing the diameter of the rod or wire by turning or grinding is that the nature of the surface layer of such specimens has an important influence upon the results of fatigue tests.

In the machine designed by Professor B. H. Haigh and T. S. Robertson* the difficulty is overcome by gripping and loading the specimen in such a manner that fracture occurs at the middle of the exposed length.

The principle of this machine differs from that of the "free bar" method that is employed in certain other transverse bending fatigue machines, notably the Jenkin's and G.E.C. electromagnetic types in which the rod is caused to flex rapidly in a given plane, so that the maximum stresses occur at two regions on opposite sides of the diameter coincident with the vibration plane. In the Haigh-Robertson machine the maximum stress is applied to every part of the wire as it rotates, as distinct from vibration in a given plane.

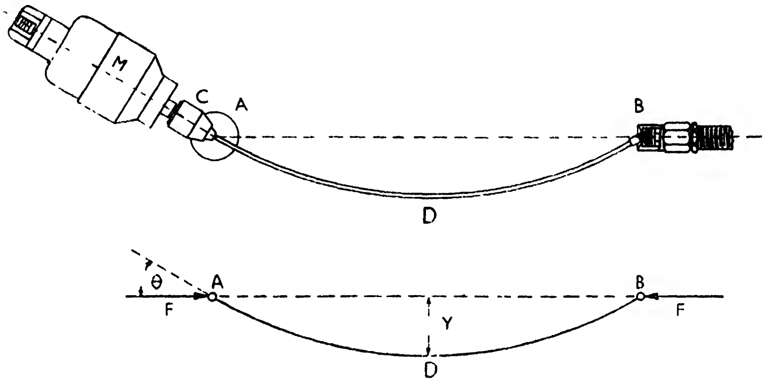

FIG. 222. PRINCIPLE OF THE HAIGH-ROBERTSON WIRE FATIGUE TESTING MACHINE

The principle of the machine is shown in Fig. 222. One end *A* of the rod or wire is gripped in a chuck *C* which is rotated by means of the electric motor *M*. The other end *B* of the rod is located in a tailstock ball-thrust bearing *B* which allows it to rotate but exercises no constraint on its lateral movement. When the motor is in operation the wire *does not rotate* bodily about the axis *AB*, but rotates about its own fixed curved axis *ADB* in the manner of a flexible shaft. When the tailstock bearing *B* is moved towards the motor the wire flexes under the end load *F*, both the chuck and motor swivelling through an angle θ as indicated in the lower diagram of Fig. 222.

The conditions of stress on the specimen are therefore those of an end-loaded strut and the bending stress at its mid-point is directly

---

* Described in *The Engineer*, 17th August, 1934.

proportional to the angle θ. The value of the bending stress is given by the following relation—

$$p = \frac{\pi}{2} \cdot \theta E \frac{d}{L}$$

where E is Young's modulus, d is the diameter, and L is the length of wire.

As the wire rotates each point on the circumference passes through a stress cycle from maximum tension on the outer or convex side to maximum compression on the inner concave side. The maximum stress range occurs at the centre D (Fig. 222), the range diminishing to zero at the ends A and B, so that there is no tendency to fracture at these ends, but at the centre. In addition to the bending stresses mentioned there is also a compressive stress due to the end loads F (lower diagram of Fig. 222), but for small angles of flexure its value is very small and may be disregarded in its effect upon the fatigue strength of the rod or wire.

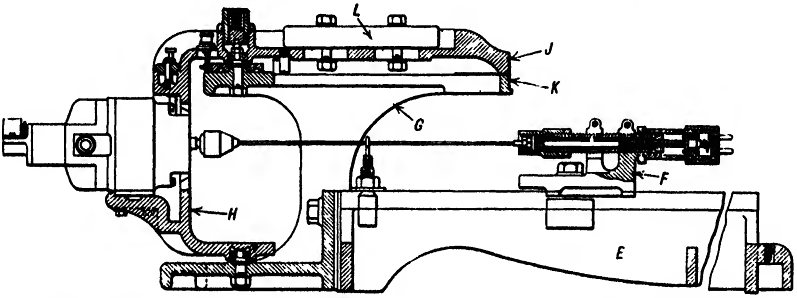

Fig. 223. The Haigh-Robertson Wire Fatigue Testing Machine

Fig. 223 illustrates the machine in front part sectional elevation. The headstock end has a casting G which houses the bearings on which the motor and chuck mounting swings. The frame H has an arm at its end provided with a vernier J to read the angle of swing θ of the motor and chuck unit; ball-bearings are used to minimize frictional effects in this swing frame unit. The scale with which the vernier J is used is shown at K. A balance weight L is mounted on the arm of the swinging frame to counteract the weight of the motor and its attachments. The tailstock unit incorporating the thrust bearing for the right end of the specimen and the end-loading device is shown at F; it is mounted on the machined bed of the frame-piece E.

In regard to the testing periods possible with the machine described, with small gauge wires and at ordinary speeds of the motor about 28 million turns of the specimen can be obtained; for normal size wires this figure is reduced to about 20 million turns.

Combined Alternating Stress Fatigue Machine

A machine designed to test steels and certain alloy cast irons subjected to combined cyclical torsion and cyclical bending—conditions experienced in the case of internal combustion engine crankshafts—was described in a paper read before the Institution of Mechanical Engineers.* The specimens tested were subjected to seven different combinations of bending and torsional stresses ranging from all bending and no torsional stress to no bending and all torsional stress.

The machine on which the tests were conducted is shown in Fig. 224.† The specimen *S* is held at one end in a bracket *K* clamped on top of the pedestal *G*. The other end of the specimen is held in a collar *C* to which an arm *A* is pivoted on an axis aligned vertically with the centre of the specimen. A disc *D* carrying an out-of-balance weight *W* is supported on an axle *F* fixed to the ends of springs *E*, the other ends of which are fixed to a bracket on the base-plate of the machine. A motor *M* running at 1500 r.p.m. drives the disc through a belt. The bracket carrying the axle *F* is connected by links *L* to the centre of percussion of the arm *A*. In this manner the out-of-balance force developed at the axle of the disc is transmitted as an alternating moment to the arm *A* and thence to the specimen. If the specimen and the bracket *K* are aligned as shown in the illustration (Fig. 224) the moment applied to the specimen will be one of pure bending. If the specimen and bracket are turned through 90 degrees the applied moment will be one of pure torsion. At intermediate angles the specimen will be subjected partly to a bending and partly to a torsional moment, the bending moment being proportional to cos θ and the torsional moment to sin θ. The two moments are in phase and reach their maximum and minimum values simultaneously. By varying the ratio of the belt pulley diameters the speed of the disc is adjusted to the frequency of resonance of all the parts vibrating on the ends of the springs *E* with the object of eliminating all the inertia forces except those arising from the out-of-balance weight. With such other inertia forces eliminated the value of the moment applied to the specimen can be determined directly from the mass of the out-of-balance weight and the speed of rotation of the disc. A direct calibration was applied as a check and was found to be in excellent agreement with the deduced value. By means of only six different out-of-balance weights ranges of bending stress from $\pm$ 5 tons to $\pm$ 50 tons per sq. in. with intermediate steps of $\pm \frac{1}{2}$ ton per sq. in. can be obtained, the specimens being of a standard 0·3 in. diameter.

---

* "Combined Alternating Stresses," H. J. Gough and H. V. Pollard, *Proc. Inst. Mech. Engrs.*, 1st November, 1935. Abstracted *The Engineer*, 8th November, 1935.

† Courtesy *The Engineer*.

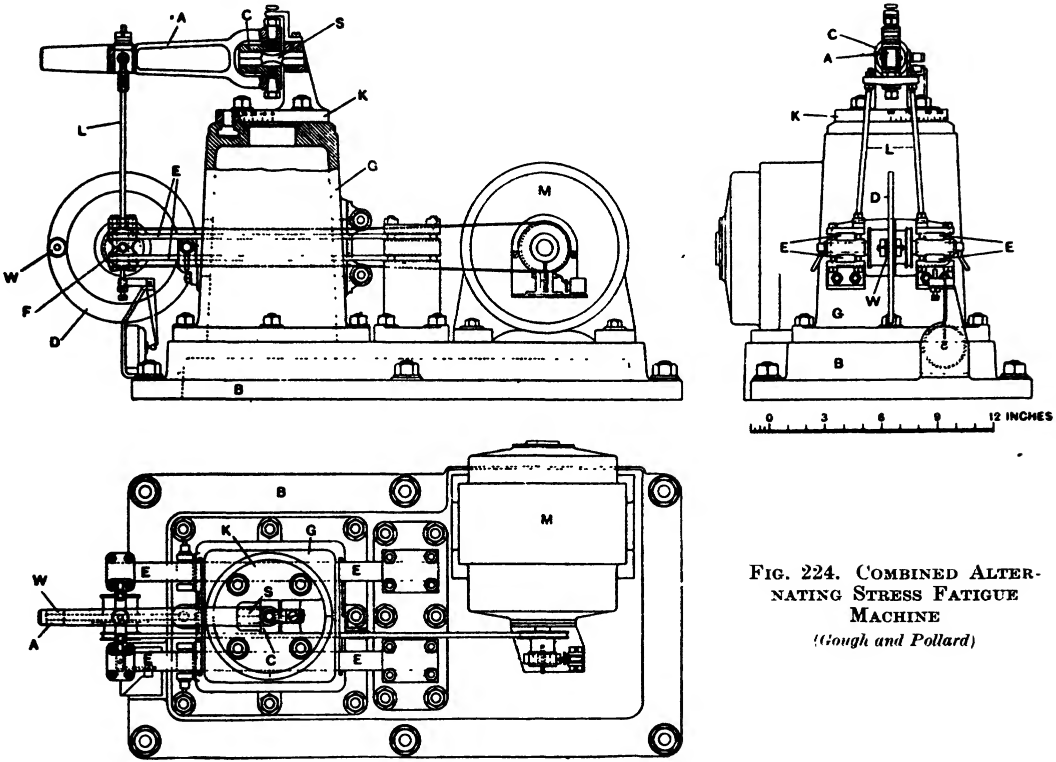

FIG. 224. COMBINED ALTERNATING STRESS FATIGUE MACHINE (Gough and Pollard)

Torsion Fatigue Machines

There are several designs of machines that have been used for testing materials under repeated stresses in torsion.

In the Stromeyer machine the principle of forced oscillations is employed. The amplitude of the oscillations is variable; it is, however, kept constant during a set of tests. The forced oscillation is impressed upon a specimen which is free to oscillate and which carries a mass of known moment of inertia.

Fig. 225 illustrates a machine designed by Professor F. C. Lea and F. Heywood;* it represents a modification of the Stromeyer machine.

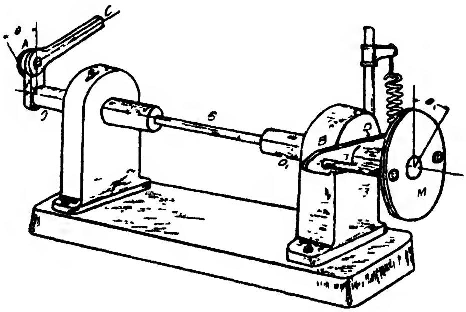

FIG. 225. TORSION TESTING FATIGUE MACHINE

(*Lea and Heywood*)

In this machine a crank OA is made to oscillate through an angle θ by the connecting rod CA. The specimen S is fixed by suitable collets to a horizontal shaft which can be rotated freely in suitable bearings. The mass M is fixed to the shaft and can be altered in amount. It is only necessary to measure the angle θ or θ_1, when the torque on the shaft can be determined.

In the modification referred to, the head-stock carrying the bearing B has a degree of freedom in the direction of the axis of the specimen; this can be so arranged that the mass oscillates through a very small angle θ_1, which can accurately be measured by means of a spot of light moving over a ground glass screen. When the one end of the specimen is free, any mean stress desired can be impressed upon the specimen by means of a spring which, through a knife edge, pulls at an arm BD, Fig. 225, connected to the spindle OO_1. The arm oscillates through a very small angle, and thus the pull of the spring only changes during a cycle by a very small amount; further, any degree of tension can be put on the specimen.

The machine is driven by a D.C. motor, and it is possible to alter the speed with ease.

In regard to the Stromeyer alternating torsion machine, whilst this allows an approximation to constant strain alternations when solid test pieces are used, it is not a suitable machine for applying torsional stresses with mean stresses other than zero.

---

* Prof. F. C. Lea, "Experiments on Effect of Repeated Stresses," *Journ. Inst. Aeron. Engrs.*, May, 1927.

Fig. 226 illustrates a special machine used at the National Physical Laboratory,* by means of which a test specimen can be subjected to alternations or repetitions of torsional stress by the application of constant strain cycles applied through a weigh-bar arrangement.

The specimen *A* is clamped at one end, and the other end is subjected to cycles of torsional strain by the angular movement of the lever *C*. A torsionmeter *B* forms the connection between *C* and the specimen. The movement of *C* is produced by the connecting rod *D* actuated by the variable eccentric *E*, which is on the main shaft driven by the motor *F*. The torsionmeter *B* shows the elastic twist in a given length of shaft by means of the mirrors *M* and, when calibrated, measures the torque applied to the specimen. This movement of the mirrors is about a horizontal axis at right angles to the axis of the specimen, but at the same time the mirrors move through approximately the same angle as the end of the specimen.

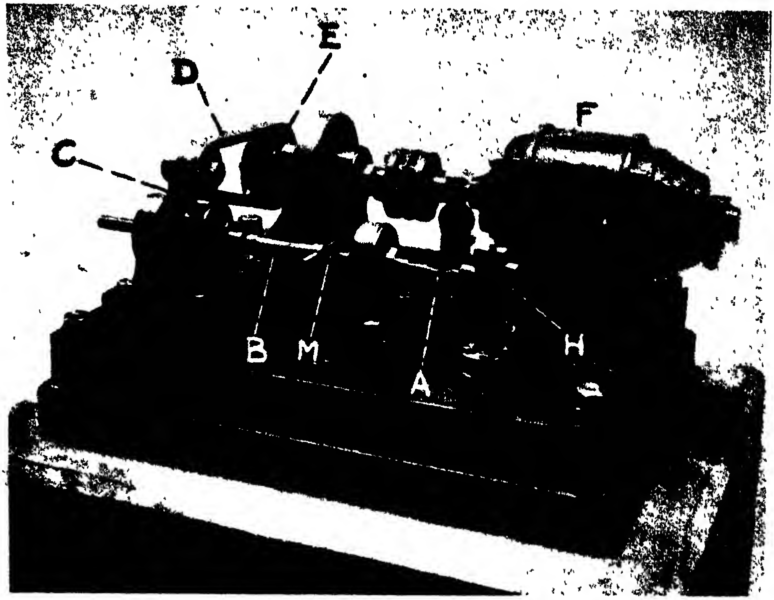

FIG. 226. THE N.P.L. TORSION FATIGUE TESTING MACHINE

Fig. 227 illustrates the type of torsionmeter used with the fatigue testing machine just described. The centre shaft *PQ* transmits the whole torque applied to the specimen, and the outside sleeve *R*, with the aid of the levers *S* working on the spindles *T*, causes the elastic twist

---

* G. A. Hankins, "Torsional Fatigue Tests on Spring Steels," *Eng. Research Spec. Rep. No.* 9. Dept. of Scientific and Industrial Research.

in *PQ* to be shown by a rotation of the mirrors. The end *Q* of *PQ* is rigidly attached to the free end of the specimen and oscillates through the same angle as the end of the specimen plus the small elastic twist in the connecting piece. The total angle of twist of lever *C* (Fig. 226) is thus taken up by the elastic twist in the torsionmeter, elastic twist in connecting pieces, and the twist (elastic or otherwise), of the specimen. When the machine is running, the motion of each mirror is shown by means of a spot of light reflected from the mirror and focused on the screen of a camera box. Each spot thus traces out a continuous torque strain diagram for the test specimen, and the speed of movement is sufficient to cause the spots of light to appear as continuous lines. The specimen is given any required initial torsional stress by an angular movement of the arm *H*, into which the end of the specimen is fixed. *H* is clamped in its new position and the machine then superimposes torsional strain alternations on the fixed torsional strain. By using two mirrors the mean stress can be obtained from the relative positions of the two diagrams on the screen of the camera box. The machine can be used at speeds up to 2000 cycles per min., and as the strain of the specimen is independent of the speed, exact speed control is unnecessary. Ball and roller bearings have been used throughout in order to reduce lubrication difficulties to a minimum.

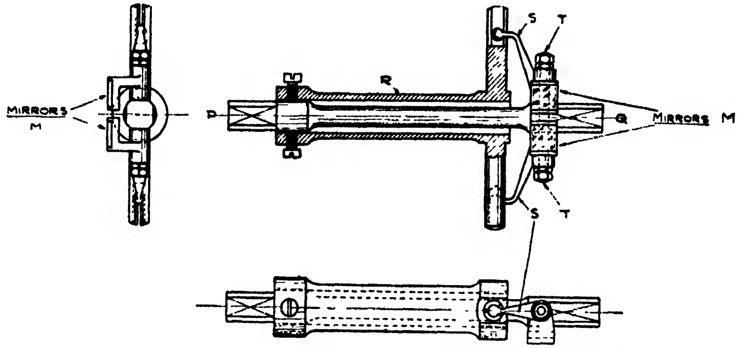

FIG. 227. TORSIONMETER OF N.P.L. TORSION FATIGUE MACHINE

CHAPTER X

IMPACT TESTS

THE ordinary tensile and bending tests are no true criterion of the impact-resisting qualities of a material, and in all cases in which a material is employed for parts subjected to shock or impact, tests should be made upon samples under similar conditions.

Machines have now been devised in which suitably shaped specimens of the material are subjected either to single or repeated blows. In some cases the specimen is given a series of impacts so that tensile and compressive stresses are alternately received, as in the case of a rod which is repeatedly pulled and pushed suddenly. In another case the specimen consists of a circular rod resting upon a pair of knife-edges, as a beam; a weight is dropped upon the centre of the beam thus formed, and between each blow the specimen is rotated about its axis through 180°, or half a turn, so that each side of the beam is alternately in tension and compression (as in the Cambridge machine shown in Fig. 198).

Nature of Impact Test

The more widely used impact test, known as the Izod method, consists in mounting a square section bar of the material to be tested rigidly in a vice member so that one end projects vertically. The bar is notched with a vee-shape of notch having a small root radius. A pendulum type of hammer having a special hardened steel striking member is arranged to fall or swing from a horizontal position, or known height, so that its striking edge hits the upper part of the test bar on the side containing the notch (Fig. 228).

The dimensions of the specimen, the weight of the hammer and the height from which it falls are standardized, and are such that the specimen is broken at a single blow. The pendulum hammer then swings past the position of the broken test piece, and its angle of swing as measured from its lowest position is indicated on a scale furnished for this purpose. The initial energy is the product of the weight of the pendulum and the height of fall of its centre of gravity. The final energy is given by the product of the weight and the rise of the centre of gravity above its lowest position in the swing; this is obtainable from the final angle of swing. The difference between the initial and final energies is the energy required to fracture the specimen.

In an alternative method of notched bar impact test, known as the Charpy, the specimen to be tested is made in the form of a square bar, with central notch, the bar being clamped at its ends and struck in the centre by the hammer on the opposite side to the notch.

Value of the Impact Test

Previously, it was believed that the notched bar impact test gave a reliable indication of the resistance of the material to impact or shock. This is not the fact, however, since the velocity at which the striker hits the test piece, being of the order of 9 ft. per sec., is too low for this purpose, although in the case of brittle materials it gives some useful information concerning the resistance to fracture at a change of section or discontinuity; further, the test in question has been shown to reveal "temper brittleness" in certain nickel-chrome steels which is not indicated by other tests or examination of the microstructure. In the case of ductile materials, such as most steels, part of the energy of the blow is absorbed in plastic deformation of the metal; if it were not for the presence of the notch the greater proportion of the energy of the blow would be used up in deformation of the specimen.

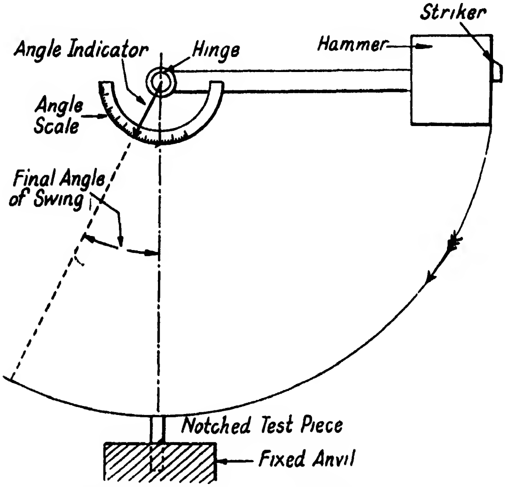

FIG. 228. PRINCIPLE OF THE IZOD IMPACT TESTING MACHINE

The object of the notch is to provide conditions for the setting up of stresses which are higher than the average value, these stresses being such that under the standard test conditions a crack is started at the root of the notch and this spreads through the rest of the metal until fracture occurs. The effect of a notch in producing lower loading breakdown conditions in brittle materials is well illustrated in the well-known method of cutting sheet glass by making a scratch with a diamond. The total energy E_T required to fracture a specimen under a single blow may conveniently be regarded as being made up of the energy E_D to deform the material plastically before fracture and the remainder E_C to propagate the crack. In the case of two similarly dimensioned test pieces, of tough and brittle steel, one notched and the other unnotched, the energy to fracture the notched specimen is appreciably lower than that required for the unnotched one. This shows that the effect of the notch not only lowers the value of E_T but also alters the ratio E_C/E_D. The results of some interesting tests made to evaluate the relation of E_C to E_T in the case of ductile and brittle steel bars have been given by P. W. Rowe* and are illustrated in Fig. 229.

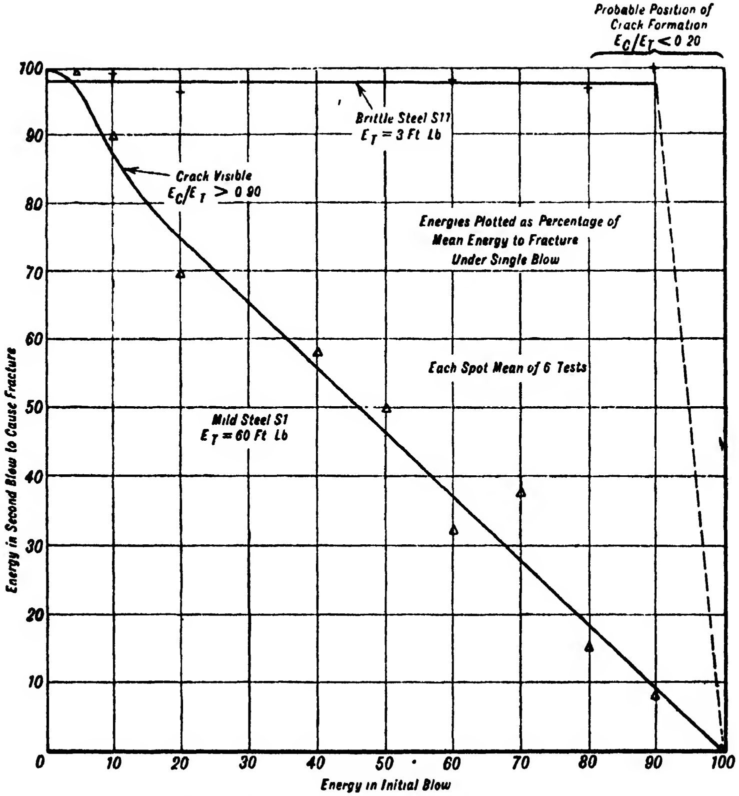

FIG. 229. IZOD IMPACT TEST RESULTS
(*P. W. Rowe*)

---

* "Interpretation of the Notched Bar Impact Tests," P. W. Rowe, *The Engineer*, 31st March, 1944.

The test consisted in striking the notched specimen initially with a percentage of the total energy required to fracture it, and then obtaining the extra energy for fracturing it in a second blow. In Fig. 229 these two energy values are plotted against each other on a percentage basis of the mean total energy needed to fracture the specimen.

The results for the mild steel specimen when the initial blow was about 12 per cent of the total energy to fracture (when a crack was discerned); the energy of the second blow to fracture it being about 85 per cent of the total energy. As the energy of the first blow was increased, the energy of the second blow decreased approximately linearly. This indicated that the energy required to propagate the crack varied as the remaining distance through which the crack had to be extended. Thus, the ratio of E_C/E_T is high for this material, since it offers a large resistance to the extension of the crack.

In the case of the brittle steel the results show that the initial blow has no effect on the remaining energy required to fracture the specimen after the initial blow has reached a high value. When the initial blow was about 90 per cent of the total energy to fracture, the specimen either broke off or else remained intact with no indication of damage. It was suggested that the change in the test piece causing the rapid drop in the extra energy required to fracture was due to the formation of a crack. This appears to indicate that initial blows up to 80 to 90 per cent only deformed the material above the notch elastically, and the striking energy of the first blow was absorbed by losses and energy returned to the hammer on bouncing back. The extra energy required to fracture the specimen was therefore the full energy to fracture, with no initial blow. Thus the ratio E_C/E_T for such brittle materials is small.

The value of the notch in specimens, *for the detection of brittleness*, will be evident from these considerations. The highly localized stresses set up at the root of the notch cause the commencement of a crack at a much earlier stage of the deformation than for an unnotched test piece. It is suggested that two figures should be used to define a material's relative resistance to shock, i.e. its total energy to fracture E_T, and the ratio E_C/E_T to indicate the relative resistance to propagation of a crack.

It may be added that in the case of mild steel *the appearance of a fractured Izod impact notched specimen* reveals some useful information, since although the general fracture may show crystal facets the width of the dark area below the notch indicates the resistance to the initial spread of the crack.

A criticism that has been made in regard to notched bar impact tests is that *the results obtained with test pieces of different shapes and sizes* appear to bear no definite relationship. Thus, in the case of Izod impact tests upon the British Standard test specimens of 10 × 10 mm., 10 × 5 mm., and 5 × 5 mm., of the same material there are wide divergences between the results, when an attempt is made to convert those of the smaller test pieces to the larger impact values. In the case of heat-treated nickel and nickel-chromium-molybdenum steels the impact figures* obtained with the smaller test pieces when converted to the larger test piece values showed errors of the order of ± 33 per cent.

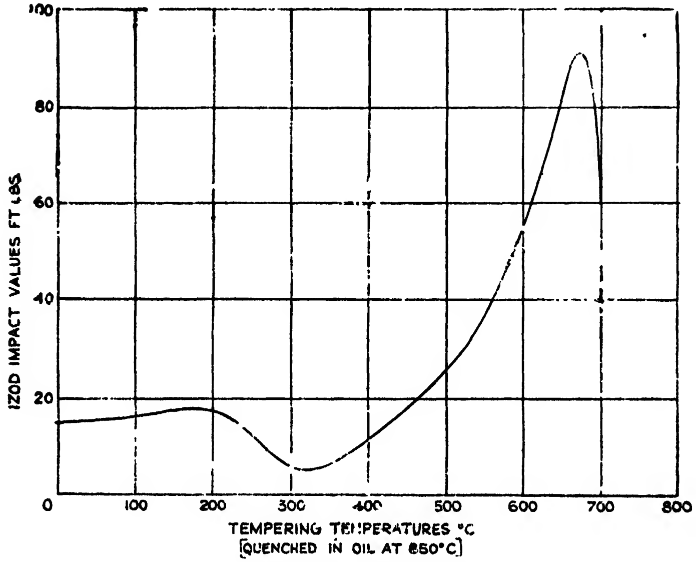

FIG. 230. IZOD IMPACT VALUES FOR A TYPICAL NICKEL-CHROMIUM STEEL (AIR HARDENING)

Izod Impact Values for Steels

Since it is now usual to specify an impact test for most steels used in automobile, aircraft, and other engineering applications, it may be of interest to consider some typical values obtained in practice.

Generally speaking, the lowest impact values are obtained in the case of fully hardened steels, i.e. hardened right out by quenching. Thus, most nickel-chrome steels of the air and oil-hardening types, with maximum tensile strengths of 100 to 120 tons per sq. in., in the fully hardened condition, show Izod impact values of 15 to 20 foot-pounds.

When tempered at 200° to 300° C. the Izod impact values are at a

---

* "Notched Bar Impact Tests," G. Burns, *The Metallurgist*, 27th December, 1935.

minima of about 10 to 15 foot-pounds; the steels are most brittle in this condition.

When tempered at higher temperatures the Izod values rise progressively until at 600° to 650° C. they attain maximum values (Fig. 230) of 70 to 90 foot-pounds.

In the case of low carbon steels in the normalized and annealed conditions, Izod values of 20 to 40 foot-pounds are commonly obtained.

Low carbon case-hardening steels in the heat-treated condition, as used in automobile and aircraft work, have Izod values of not less than 40 foot-pounds.

It is usual to specify a minimum Izod value of 40 foot-pounds for steel parts subjected to shock and vibration under working conditions; most automobile alloy steels are included in this class.

TABLE 49

IMPACT VALUES FOR AUTOMOBILE STEELS*

Type of Steel	Condition	Tensile Strength, Tons per sq. in.	Izod Impact, Ft.-lb.
0·15% carbon case-hardening steel	Cemented at 925° C. Hardened at 760° C.	32 (min.)	40 (min.)
2% nickel case-hardening steel	Cemented at 925° C. Hardened at 760° C.	35 (min.)	60 (min.)
3% nickel case-hardening steel	Cemented at 925° C. Hardened at 760° C.	42 (min.)	40 (min.)
5% nickel case-hardening steel	Cemented at 925° C. Hardened at 760° C.	55 (min.)	20 (min.)
Carbon steel (0·4% C, 0·3 to 1·00% Ni)	Hardened in oil at 850° C. Tempered at 680° C	40 to 50	30 (min.)
45-ton alloy steel	Heat-treated.	45 to 55	40 (min.)
55-ton alloy steel	Heat-treated.	55 to 65	40 (min.)
3% nickel steel	Hardened in oil at 850° C. Tempered at 660° C.	45 (min.)	40 (min.)
Nickel-chromium steel (C 0·3, Ni 3·5, Cr 0·7)	Hardened in oil at 830° C. Tempered at 620° C.	55 to 65	40 (min.)
Air-hardening nickel-chrome steel	Hardened in air at 820° C. Tempered at 250° C.	100 to 120	5 to 9
Chrome-vanadium steel (C 0·4, Cr 1·25, V 0·25)	Hardened in oil at 850° C. Tempered at 500°–700° C.	55 to 65	40 (min.)

Simple Beam Impact Tests. The simplest form of impact test is that employed for testing steel rails or cast iron bars, by supporting these as beams at their ends and dropping a weight upon the centres of the beams. The number of blows required to produce a given deformation, or fracture, is taken as a measure of the impact qualities of the materials.

---

* Based on B.S.I. specified values.

In such tests the materials are tested under conditions approximating to those of their use. An American standard specification for steel axles is as follows: The axle is supported upon an anvil weighing 8 tons, resting upon springs, and the centre of the axle supports are 3 ft. apart.

The radius of the supports and of the striking face of the $\frac{3}{4}$ ton hammer is 5 in.

The axle is rotated through 180° after each blow, and the following are the specified maximum deflections for different-sized axles—

TABLE 50

AMERICAN STANDARD IMPACT TEST FOR STEEL AXLES

Diameter of axle (inches)	$4\frac{1}{4}$	$4\frac{3}{8}$	$4\frac{7}{16}$	$4\frac{5}{8}$	$4\frac{3}{4}$	$5\frac{3}{8}$	$5\frac{7}{8}$
Drop in feet	24	26	$28\frac{1}{2}$	31	34	43	43
No. of blows	5	5	5	5	5	5	7
Maximum deflection in inches	$8\frac{1}{4}$	$8\frac{1}{4}$	$8\frac{1}{4}$	8	8	7	$5\frac{1}{2}$

The fatigue or shock resisting qualities of automobile and aircraft metals may be tested in the laboratory by means of the repeated impact-testing machines now obtainable for that purpose.

The results given in Table 51 were obtained with the Cambridge bending impact machine previously described. The specimens were circular rods of $\frac{1}{2}$ in. diameter, and rested upon knife-edges placed at $4\frac{1}{2}$ in. apart; a tup or hammer weighing 4·71 lb. was caused to drop

TABLE 51

BENDING IMPACT TEST RESULTS FOR ALLOY STEELS

Material	Tensile Test Results			No. of Blows to Fracture
	Yield Point, Tons per sq. in.	Tensile Strength, Tons per sq. in.	Elongation per cent on 2 in.	
Rail steel	—	—	—	1790
(*a*) Nickel steel (untreated)	35	46·5	27·5	2680
Case-hardening mild steel (untreated)	23	31·0	39·5	1437
(*b*) Nickel steel (untreated)	26	36·0	35·0	1740
Case-hardening nickel steel (untreated)	30	35·0	24·0	1440
(*c*) Nickel steel (heat-treated)	56	64·0	20·0	1690

repeatedly upon the centre of the specimen beam, from a height of 1·56 in. in most cases. The specimen was rotated through 180° in between each successive blow, and the blows were continued until fracture occurred; the number of blows required to fracture similar specimens is taken as a measure of the relative bending impact quality of the materials. The rate of impact-loading was about 100 per min.

Table 52 shows the results of a number of Izod impact tests for some typical materials.

TABLE 52

IZOD IMPACT TEST RESULTS*

(Standard 10 millimetres square test piece)

Material	Yield Point, Tons per sq. in.	Ultimate Stress, Tons per sq. in.	Elongation on 2 in. per cent	Reduction of Area per cent	Average Izod Result in Ft.-lb.
Bright drawn mild steel bar (untreated) .	36·0	37·0	24·0	59·2	12·0
Nickel-chrome steel bar†	44·0	59·3	26·0	61·9	62·1
Nickel-chrome case-hardening gear steel‡ .		50	15·0	50	45·0
Nickel-chrome case-hardening gear steel . .	65	85	10·0	35	20·0
Nickel-chrome oil-hardened gear steel . .	105	115	8·0	25	6·0
Nickel-chrome air-hardened steel . .	90 100	105 115	15 10	35–25	15–10
IZOD TESTS UPON BASES $\frac{3}{8}$ IN. WIDE × $\frac{5}{16}$ IN. DEEP. 0·05 IN. V NOTCH					
Stud steel . .	—	31·0	30·0	—	6·9
Steel from forging .	18·6–20·5	33·4 39·3	33·0 28·0	—	2·5–2·2
Steel from forging, oil-tempered . . .	20·5	39·3	28·0		0·7
Naval brass . . .	—	26·3–30·3	19·0–28·0	—	3·7–5·5

Notched Bar Test Pieces and Test Conditions

Unfortunately, with the different types of impact machines in use, the sizes and shapes of the test pieces used have hitherto conformed to no proper standard.

There has recently, however, been a successful endeavour on the part of the British Standards Institution|| to lay down certain definite

---

* Heated to 800° C., quenched in oil and tempered at 635° C.

† Tested on the core.

‡ Unhardened.

|| "British Standard Forms of Notched Bar Test Pieces," B.S.I. Specification, No. 131, 1933.

standard shapes and dimensions of specimen, and to define the conditions of the blow.

In regard to the pendulum type, it is recommended that the pendulum should be supported on knife-edges or ball bearings, the centres of gravity of the pendulum and test piece and the point of impact being in the middle plane of oscillation. The centre of percussion of the pendulum should be at or slightly above the point of impact.

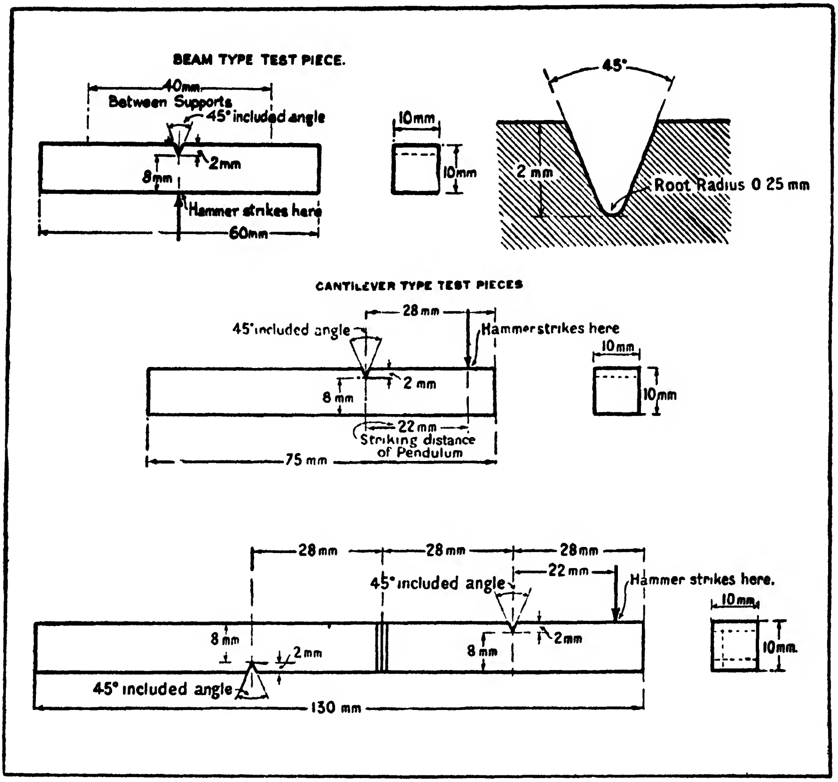

FIG. 231. B.S.I. STANDARD NOTCHED BAR DIMENSIONS

The striking velocity should not be less than 3 metres per sec., and the weight of the anvil block and its foundation at least 40 times the weight of the tup or pendulum.

Of the various types of impact machines in use, the results obtained from standard test pieces at about the same striking velocity are substantially the same.

The striking energies of the Izod, Charpy, Frémont, and Amsler impact machines are 16·6, 30, 20 (or 60), and 30 kilogramme-metres respectively; their respective striking velocities are 3·5, 5·3, 8·85, and 4·95 metres per sec.

The shape of the notch is so important in defining the impact value that its form has been standardized to that of *a V-notch of* 45° *angle with a ¼ mm. radius at the bottom of the notch.*

This radius of curvature is important since it has been found that the indication of brittleness, marked by a low value of the work of fracture, is more definite the smaller the angle of the notch and the radius of curvature at the bottom of the notch.

The British Standard notched bar test piece is of 10 mm. × 10 mm. cross-section, having the form and depth of notch shown in Fig. 231. In cases where sufficiently large section specimens cannot be obtained, subsidiary standard specimens of 5 mm. × 10 mm. and 5 mm. × 5 mm. are recommended by the B.S.I.

The Izod test piece is clamped securely at its lower end, as shown in Fig. 232. The notch centre is on the plane of the top of the anvil; the shape and position of the striker are illustrated in this diagram. The striker makes contact with the test piece at a distance of 22 mm. from the centre of the notch.

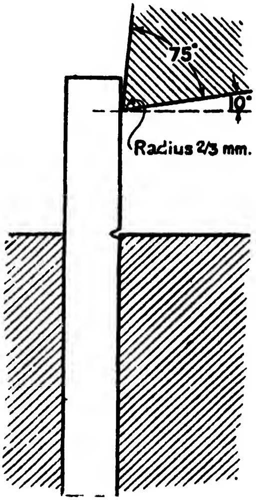

FIG. 232. STANDARD METHOD OF CLAMPING AND STRIKING IZOD TEST PIECE

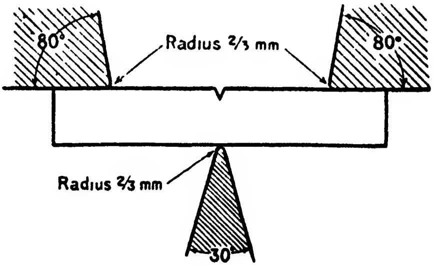

FIG. 233
METHOD OF MAKING IMPACT TEST ON BEAM OR CHARPY TYPE SPECIMEN (PLAN VIEW)

Another type of impact test piece of the supported beam class is shown in Fig. 233. In this case the test piece is supported on knife-edges 40 mm. apart, and is struck at the centre on the opposite side to the notch.

In another kind of test sometimes specified, a longer test piece is used having three different notches, two lying parallel, but on opposite sides, and the other at right angles. This gives two tests in one direction, and one at right angles.

The lowest diagram in Fig. 231 shows the dimensions and positions of the notches of this type of test piece.

Tension impact tests with notched specimens are sometimes made; the bending impact test is usually selected, however, as it offers more convenience in carrying out. The residual energy may conveniently be measured by measuring rebound heights.

The impact test brings out the shock-resisting quality of the material, which is not shown by the ordinary static tests, and there is often a marked difference between the two kinds of test results; moreover, the type of crystalline fracture obtained by the impact test closely resembles that of repeated stress specimens, the cracking occurring across the grains, with little or no elongation.

The method in question has been employed commercially for testing to destruction, in tension impact, full-sized 100 ton railway couplings, chains, and 1½ in. diameter screw threads. A full-sized tensile-impact testing machine used for testing railway couplings, etc., to destruction was designed by the writer, and installed at the National Physical Laboratory, Teddington.

Impact Machines

Machines which have been devised for testing materials under conditions of impact or shock may be roughly divided into two classes—namely, (*a*) machines for breaking the given specimen at a single blow, and provided with means for measuring the energy absorbed; and (*b*) repeated-impact machines for delivering a number of blows of known energy before fracturing the specimen.

To the former class belong the Izod, Charpy, Olsen, and N.P.L. screw-thread and railway coupling impact machines.* The latter class comprises machines such as the Cambridge drop-hammer type, the Eden-Foster, and vibratory spring testers, already described.

The Frémont Impact Machine

This machine is of the falling-weight type, and is often employed in automobile and engineering works for testing the shock-resisting qualities of materials.

The test piece, made to standard dimensions, is placed upon rests at the bottom of the apparatus, and a vertical column, immediately above, acts as a guide for the weight, which is allowed to drop upon the specimen.

The initial height multiplied by the weight of the hammer is a measure of the energy of the blow; the energy left in the hammer after the blow is measured by means of the deflection of a spring which

---

* This machine has since been arranged to deliver a number of successive measurable blows to the specimens until fracture occurs.

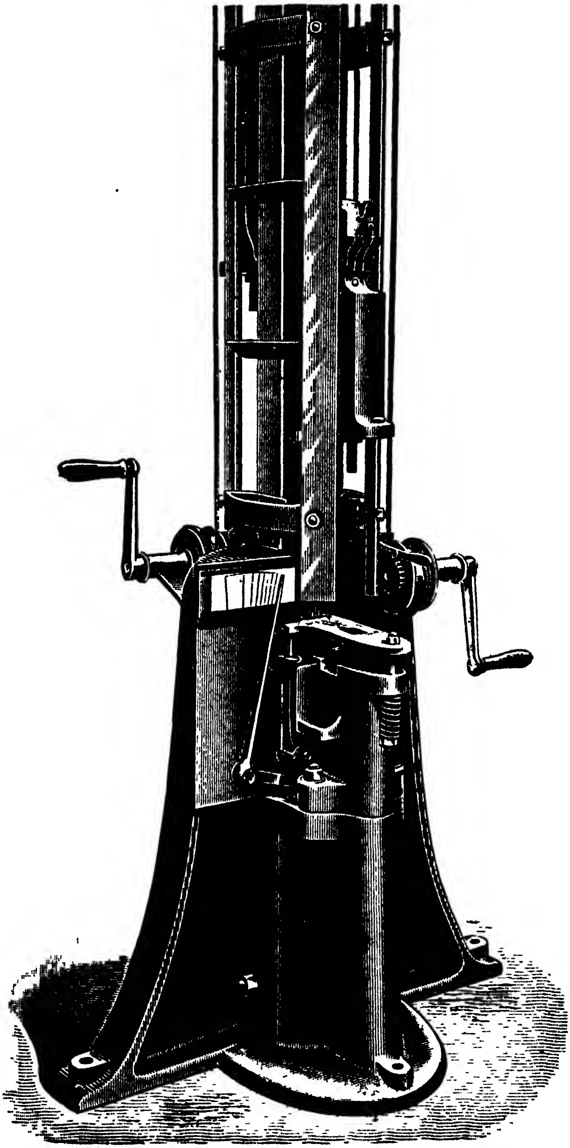

FIG. 234. THE FRÉMONT IMPACT TESTING MACHINE

receives the blow after the specimen has fractured. The difference between the two energies is that absorbed by the specimen.

In this type of impact machine the notched specimen is held in a vice, and is broken by means of a hammer of 10 kg., or 15 kg., dropped on it from a height of 4 metres. After rupture the specimen drops through the anvil and passes into a pocket on the side of the machine as shown.

After breaking the specimen the hammer falls upon a platen which rests upon two springs. These are compressed owing to residual energy in the hammer, the amount of compression being recorded on the scale shown; this gives a measure of the energy.

The original sizes of the specimens used were as follows: 10 mm. wide by 8 mm. thick by 30 mm. long. They were notched with a hacksaw blade 1 mm. wide and broken over a die 21 mm. wide. The B.S.I. specifications for suitable notched bar shapes have already been referred to.

The machine in question is provided with means for raising and releasing the hammer automatically. It can readily be calibrated by raising the weight to different heights and allowing it to fall on the scale platen, noting the readings on the scale.

The machine in question is 18 ft. high, 2 ft. long, and 2 ft. 3 in. deep. It is of a somewhat massive construction to ensure rigidity; the total weight of this machine illustrated is 1600 lb.

The Izod Machine

This machine,* which is shown illustrated in Fig. 235, is designed for making impact tests upon standard notched bar specimens. The specimen is clamped in a vice in the position indicated in Fig. 236—that is, with the notch facing the hammer, which is of the pendulum type.

The hammer is released from an indicated angle, corresponding to a fixed height, and after striking and fracturing the specimen swings to the opposite side, to another indicated angle, from which the height after swing is determinable. (See Fig. 228.)

The energy absorbed by the test piece is, then, equal to the difference in heights of the C.G. of the hammer before and after impact, multiplied by its weight.

The indicating scale is provided with a friction pointer, which is moved by the swinging hammer, and is graduated to indicate energies in foot-pounds, directly.

This form of machine is simple and cheap; it enables single-blow impact tests to be made very quickly and has been found to give accurate comparative results. The maximum energy of this machine is 120 foot-pounds.

---

* Manufactured by Messrs. W. & T. Avery, Ltd., Birmingham.

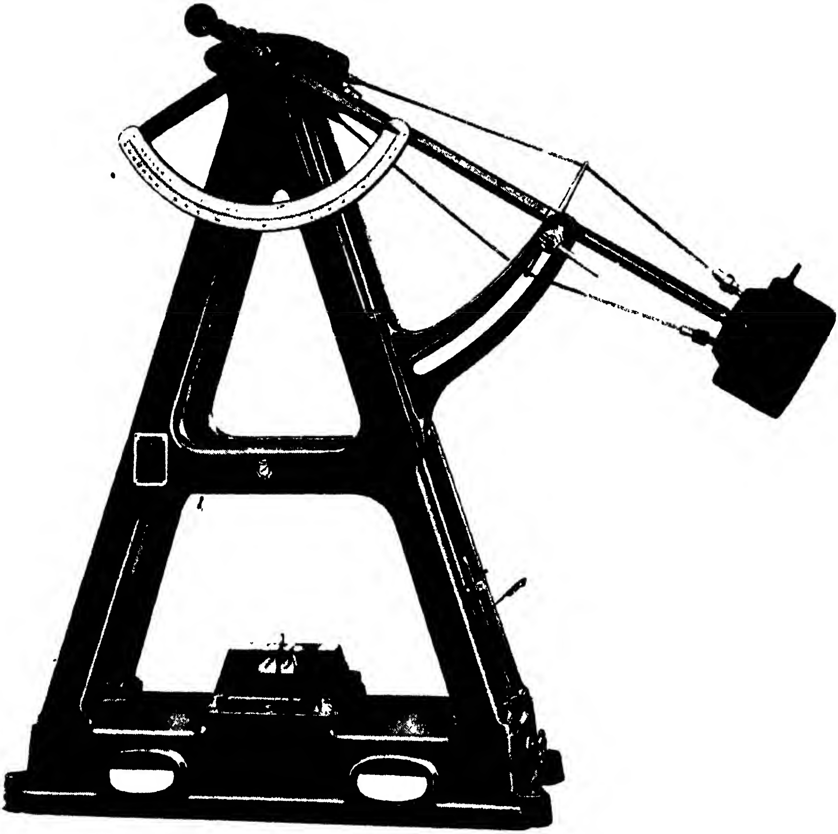

Fig. 235. The Izod Impact Machine

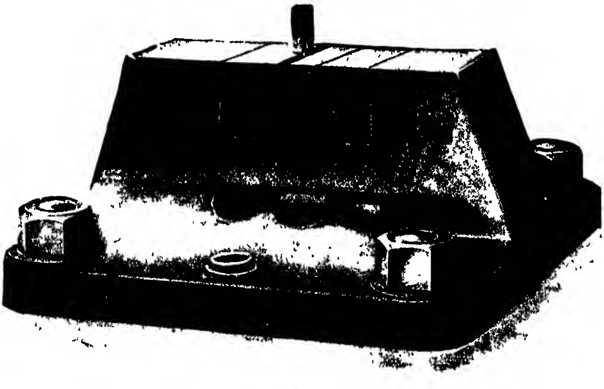

Fig. 236. Anvil for Izod Machine

The Charpy Machine

This machine, which is used on the Continent and in the U.S.A., is also of the pendulum type, but the hammer consists of a flat circular disc, provided with a 30° rounded striking edge; the hammer weight is 50·2 lb., and the height of fall 51·8 in., the total energy of the blow being about 217 foot-pounds. The notched-bar specimen is fixed at its two ends as a beam, and is struck in the centre behind the notch by the hammer striking edge.

FIG. 237. THE CHARPY IMPACT MACHINE

The hammer arm swings through an angle of about 154¾° before striking the specimen, and is released by withdrawing a spring plunger, or trip; after striking, the hammer is prevented from swinging back upon the fractured parts by means of a hand-lever operated brake which consists of a serrated band almost coincident with the line of swing of the lowest part of the hammer. When the hand lever is pulled towards the operator, the forward end of this band is lifted so that the hammer is wedged or caught by the band.

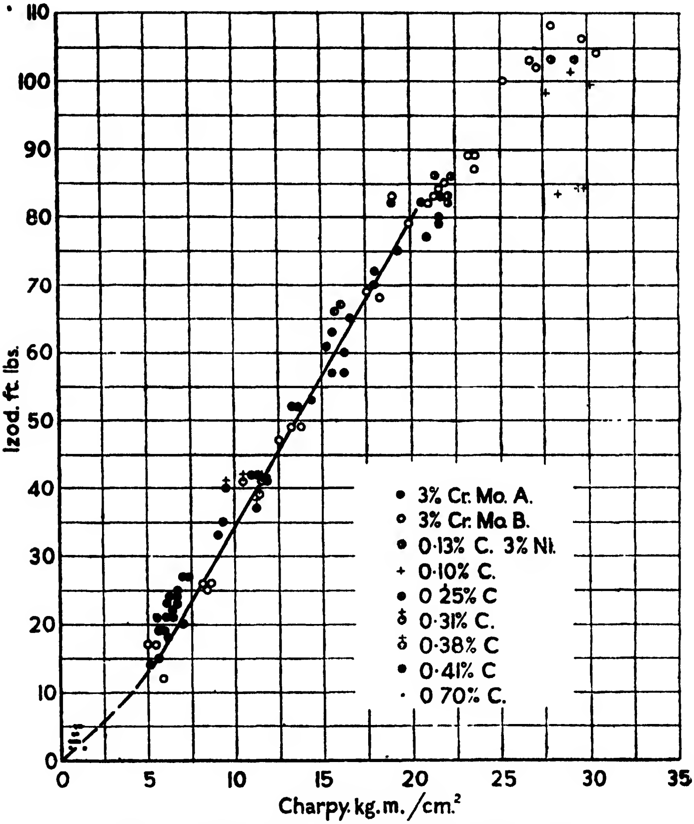

Fig. 238. Correlation of Izod and Charpy Results

A hand-operated worm and worm wheel are provided for raising the hammer to its starting point.

Relation between Izod and Charpy Impact Values

It is generally agreed that there is no absolute and complete formula which enables the results obtained, respectively, from the Izod and Charpy machines to be correlated one with the other, and many of the data obtained by different investigators give widely different relations, due to a variety of causes, e.g. differences in materials, direction of notching, preparation of notches, etc.

Some useful and reliable information, however, has been given by the British Standards Institution* as a result of tests made on steels of requisite uniformity, great care being taken to ensure that the respective test pieces were strictly comparable and to B.S.I. standards. The Izod machine used had a 60 lb. striking mass at the striking point and a drop of 2 ft., giving a striking energy of 120 ft. lb. and speed at impact of 11·7 ft. per sec.

The Charpy machine had a striking mass of 22·410 kg. with a drop of 1·3387 metres, giving a striking energy of 30 kg. metre. The speed at impact was 5·122 metres per sec. (16·8 ft. per sec.).

The results of these tests are reproduced in Fig. 238, the various steels used for the test being indicated on the right of the graph.

Disregarding the extreme ends of the graph, it will be seen that the following linear relation holds within the Izod range of 15 to 70 ft. lb.—

$$\text{Charpy value} = \frac{\text{Izod value} + 10}{4{\cdot}5}$$

or

$$\text{Izod value} = 4{\cdot}5\ \text{Charpy value} - 10.$$

Torsion Impact Tests

The ordinary notched bar impact test does not satisfactorily assess the shock-resisting qualities of the harder carbon and alloy steels since this group gives low impact values; moreover, it is not possible to make useful comparisons between the shock-resisting properties of such steels. It is also well-known that many hard steels, such as the high carbon ones, actually possess good resistances to shock despite their low Izod impact values.

It has been proposed that, for these steels at least, the torsion impact test should be employed since the results obtained give a more accurate conception of the shock resistances. In this connection a torsion impact machine, used by G. V. Luerssen and O. V. Greene,† has been employed to test the impact qualities of hardened steels. The principle used is that of applying a sudden stress distributed over the cylindrical length of the test piece instead of utilizing the highly concentrated stress around a notched bar. The test piece is arranged to fit at one end into a sleeve which can be moved axially in a rigid

---

* B.S.I. 131—1933. Notched Bar Test Pieces, Amendment No. 1, December, 1942.

† G. V. Luerssen and O. V. Greene: "The Torsion Impact Test," *Proc. Am. Soc. Testing Materials*, 1933, 33, Pt. 2, 313–327, and "The Torsion Impact Properties of Hardened Carbon Tool Steel." *Trans. Am. Soc. Testing Materials*, April, 1934, 311–337. Abstracted in *The Metallurgist*, 31st August, 1934.

housing; a cross arm is mounted at the other end. A flywheel,* which is arranged coaxially with the specimen, carries two symmetrical bosses on one side. It is rotated by means of a handle or electric motor to the correct speed at which the test is to be carried out. By means of a knob, which is depressed, the specimen is caused to slide inwards so that the cross arm engages with the striking bosses on the flywheel.

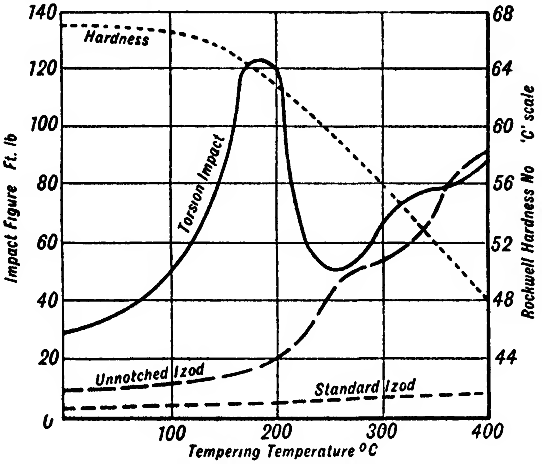

FIG. 239. RELATION BETWEEN IZOD AND TORSION IMPACT TESTS ON 1·06 PER CENT CARBON STEEL, BRINE QUENCHED AND TEMPERED

(*Luerssen and Greene*)

The energy of the flywheel is thus utilized to fracture the specimen at a single impact in torsion. The energy absorbed in breaking the specimen is deduced from readings of the initial and residual speed immediately after impact. In order to give convenient test values for comparison purposes the dimensions of the test piece were selected so that the diameter over 1 in. parallel section was 0·25 in. Square ends of 0·5 in. side were used, and the intermediate contour was designed to prevent stress concentration outside the acting length.

The test results were found to be independent of fairly wide variations in the initial striking speed, provided the residual energy of the flywheel after fracture was not less than one-quarter of the initial energy.

Fig. 239 illustrates the results of a series of tests made at different tempering temperatures from 0° to 400° C., as compared with the corresponding values for both the unnotched and standard notched Izod tests on the same 1·06 per cent carbon steel (brine quenched and tempered at the different temperatures shown in Fig. 239).

---

* See also page 298.

The torsion impact graph at once reveals striking differences in the shock-resisting properties which are not brought out by the notched Izod values; thus in the former case there is a maximum impact value at 175° C. which is not shown in the Izod figures. It will, however, be

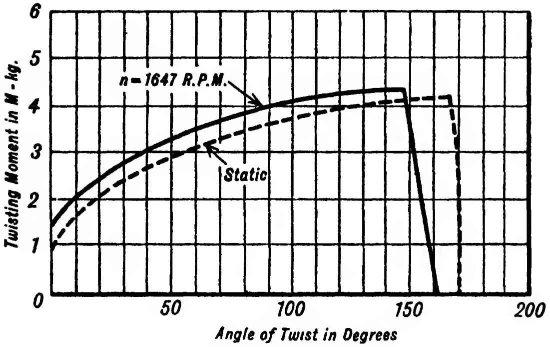

FIG. 240. STATIC AND IMPACT TORSION TESTS ON BRASS (ANNEALED 1 HOUR AT 600° C.)

noted that there is a general resemblance between the unnotched Izod values and the torsion impact ones above about 260° C. tempering temperature, corresponding to the more ductile condition.

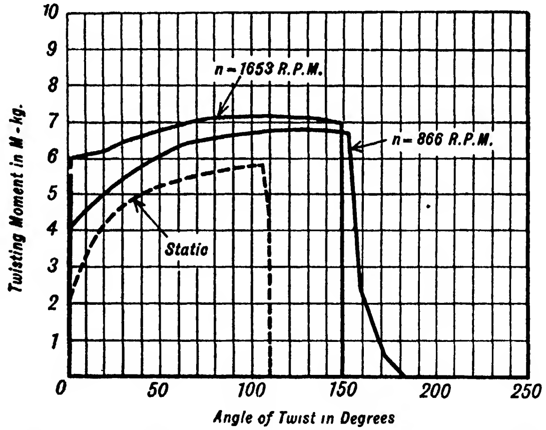

FIG. 241. STATIC AND IMPACT TORSION TESTS ON 0·5 PER CENT CARBON STEEL (ANNEALED FOR 2 HOURS AT 800° C.)

An interesting comparison* between the static torsion and impact torsion properties of different metals has been made by Mititosi Itihara of Japan by means of the rotating flywheel torsion impact machine

---

* Tech. Reports, Tohoku Imperial Univ., 1933, 9, 16; 1935, 11, 489 and 512; 1936, 12, 63, and 105, and *The Metallurgist*, 26th June, 1936.

method, using an initial speed of 1700 r.p.m. and measuring the torque and angle of twist from photographic records.

The results of tests made upon annealed brass as tested in static torsion (shown by the dotted lines) and impact torsion (full lines) are given in Fig. 240* and clearly indicate a marked similarity in the form of the graphs; this similarity, and, in some instances, coincidence, of the results was also found to apply to other non-ferrous alloys.

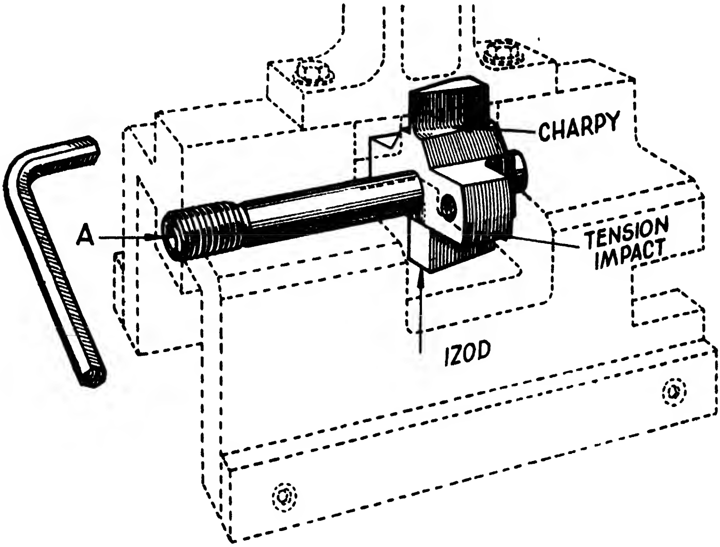

FIG. 242. PRINCIPLE OF OLSEN "CHANGE-O-MATIC" HEAD

In the case of pearlitic steels, however, there were marked differences. Thus, for both iron and annealed carbon steels the angle of twist in the impact test was 10 to 20 per cent greater than in the static test and the yield point was nearly three times as great; the maximum twisting moments were also from 15 to 20 per cent greater (Fig. 241).

When mild steel was tested at different temperatures in both static and impact torsion it was found that the maximum twisting moment occurred at 250° C. in the static tests and 600° C. in the impact tests. From room temperature to about 250° C., the general shapes and dimensions of the graphs of twisting-moment and angle of twist were approximately the same for 0·6 per cent carbon steel.

Olsen Universal Izod, Charpy and Tension Impact Machine

An impact machine of more recent origin made by Tinius Olsen† enables either the Izod, Charpy or tension impact tests to be made

---

* *The Metallurgist.*

† Edward G. Herbert, Ltd., Manchester.

on the same machine, by means of a device incorporated in the hammer member, known as the "Change-O-Matic" Head. This is a permanent fitting and requires the use of a wrench, only, to alter the striking units for either of the three types of test.

The anvil for holding the test specimens is designed in such a manner that no additional units are needed, the clamping of the specimen being effected in each case by means of the same handle and lever arrangement.

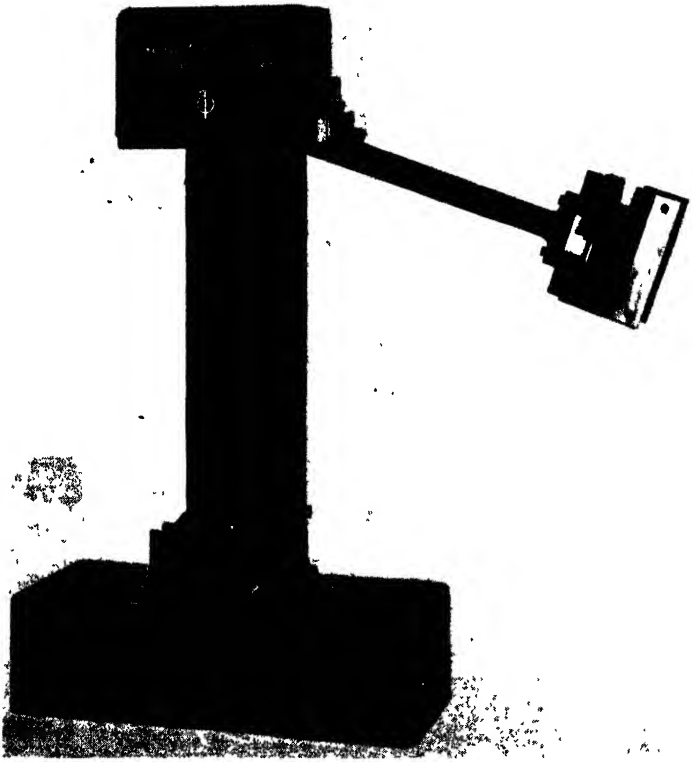

Fig. 243. The Olsen Impact Testing Machine with "Change-O-Matic" Head

Fig. 242 illustrates the method used for altering the striking faces on the hammer. These faces are part of a shaft which is encased within the hammer. By loosening the screw *A* and slipping the shaft shown out of a keyway the head containing the striking faces is left free to rotate to any of the three desired positions. The keyway is then re-engaged and the screw tightened with the bent hexagonal wrench, shown on the left in Fig. 242, when the desired striker is clamped firmly in position.

The Olsen machine (Fig. 243) is fitted with a linear type of scale to record the angles of swing of the hammer. Special features of this machine include an automatic brake to hold the pendulum after it reaches the end of its swing; a safety keeper to support the pendulum when inserting the specimens in the anvil, open front construction for easy insertion and removal of the specimens; precision bearings on either side of the pendulum support shaft; enclosed type of casings and handle operation of the specimen clamping vice. The machine is made in capacities of 120 and 264 ft. lb., and it takes standard Izod and Charpy specimens and impact tension members to the dimensions shown in Fig. 244. The correct striking velocities as laid down by the B.S.I. are provided for.

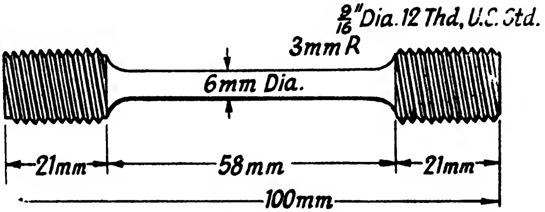

FIG. 244. OLSEN IMPACT MACHINE TENSION SPECIMEN

The Hounsfield Balanced Impact Machine

The method of construction employed in this machine results in a light and compact unit since it obviates the use of a heavy base and anvil; in consequence the moving weight is divided equally between the two tups or pendulums, which move in opposite directions, the total weight being only 39 lb. The main frame *F* (Fig. 245) is of aluminium alloy; it supports the bearings of the pendulums and the release mechanism. This frame can be secured to any convenient table by means of screws.

The weight at the centre of percussion is 12 lb., and as this weight falls through a vertical height of 4 ft. the energy stored is 48 ft. lb. The relative velocity is 22·7 ft. per sec. This velocity in conjunction with the short distance between the anvils gives a high angular bending velocity. In Fig. 245 the machine is shown with the test piece *S* in position ready for the impact. The pendulums *I.T.* and *O.T.* are held by means of catches and are released by throwing over the hammer *H*. When the pendulums pass one another a non-return pawl mechanism is brought into action so that the pendulums are prevented from swinging backwards. As the indicating pointer *P* records the difference in movement between the pendulums the scale *K* is an open one.

Whilst the results given are not the same as for the standard Izod test, comparable values are obtained from ferrous metals by multiplying the Hounsfield machine results by 2·5.

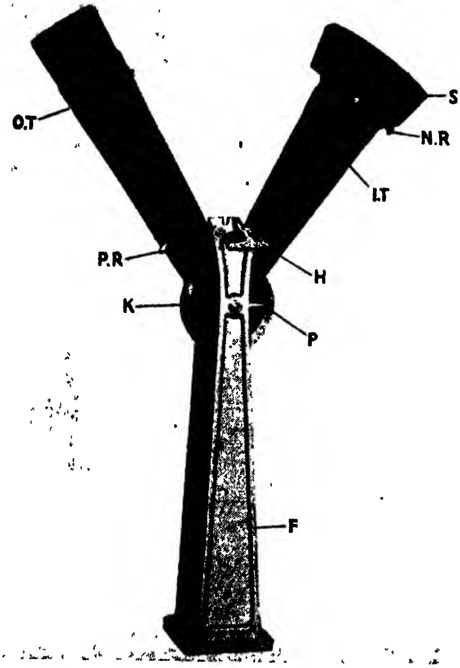

FIG. 245. THE HOUNSFIELD BALANCED IMPACT MACHINE READY FOR MAKING A TEST

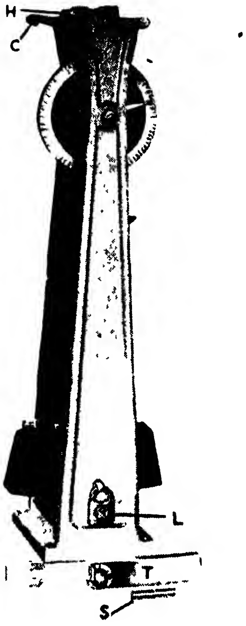

FIG. 246. THE HOUNSFIELD BALANCED IMPACT MACHINE AFTER TEST

The test piece used is $\frac{5}{16}$ in. diameter by $1\frac{3}{4}$ in. in length and has a notch of 45°, radiused to 0·01 in., giving a depth or thickness of 0·229 in. for the unnotched section. A special machine is supplied for notching the round bar specimens. In Fig. 245 *N.R.* denotes the notch register and *P.R.* the pawl release lever. In Fig. 246, *H* is the hammer, *S* the specimen, *C* the release catch, *T* the notching tool, and *L* a padlock for the machine when not in use.

Impact Tests of Plastic Materials

The increasing application of plastic materials to engineering purposes indicates that it will become necessary to standardize the methods of making mechanical tests upon such materials in order to ensure uniformity of properties and to provide reliable data for design purposes. Although at present various methods for testing plastics are in regular use, these are often individually basically different, and are largely used by manufacturers for the purpose of testing their own products. In regard to impact tests, in the past difficulty has been experienced in using the Izod type of machine to check materials for brittleness. The errors of this method, namely, "shearing and tearing" action and the "broken half" error, are shown by experience with plastics tests to be considerable and sufficient to invalidate it for comparative brittleness testing of this class of materials.

According to an investigation by L. H. Callendar* comparative brittleness testing has been found, by numerous results, to be concerned with the following items, namely—

(1) The use of the same radius of notch, namely, ½ mm., and the same depth of notch, namely, one-third of the thickness of the test piece for all tests on pieces of any cross-section.

(2) Charpy anvils adjusted to a distance apart equal to six times the thickness of the particular test piece under test.

(3) A minimum velocity of impact of 8 ft. (244 cm.) per sec.

(4) The first definite crack or break must be taken as the end-point of the test.

(5) The use of the guillotine or vertical drop-weight type of machine is also advantageous for this purpose; photographs of a recommended design of machine are given in the article referred to in the footnote.

A further important item is the plastic yield temperature and also the need of controlled humidity in relation to impact testing. A simple machine was described, in the footnote reference, for plastic yield temperature.

Impact Testing Machine for Plastics

An Izod type machine devised by W. & T. Avery, Ltd., for testing plastic materials is illustrated in Fig. 247. It is applicable to tests on plastics such as Bakelite, laminated boards and sheets, insulating materials, etc. The machine in question is made in three capacities, namely, 1 ft. lb., 3 ft. lb., and 10 ft. lb., and the specimen used is ½ in. square in section by 2·5 in. long; it has a 45° notch radiused to 0·04 in. The section at the notch measures 0·5 by 0·4 in.

The pendulum is arranged to provide a striking velocity of 8 ft. per sec. at impact.

When testing, the pendulum, which has a renewable hardened steel striking edge of radius 0·125 in., is released by the upper hand lever.

---

* "New Methods for Mechanical Testing of Plastics," L. H. Callendar, *British Plastics*, Vol. 13, April, 1942.

The residual energy swing angle is measured by a friction pointer which can be set back against the carrier pin, by means of a central knob on the front of the dial. The specimen is fixed securely in the anvil vice by means of the hand lever shown on the right of the base. A small setting slide or gauge is provided for accurate location of the notch.

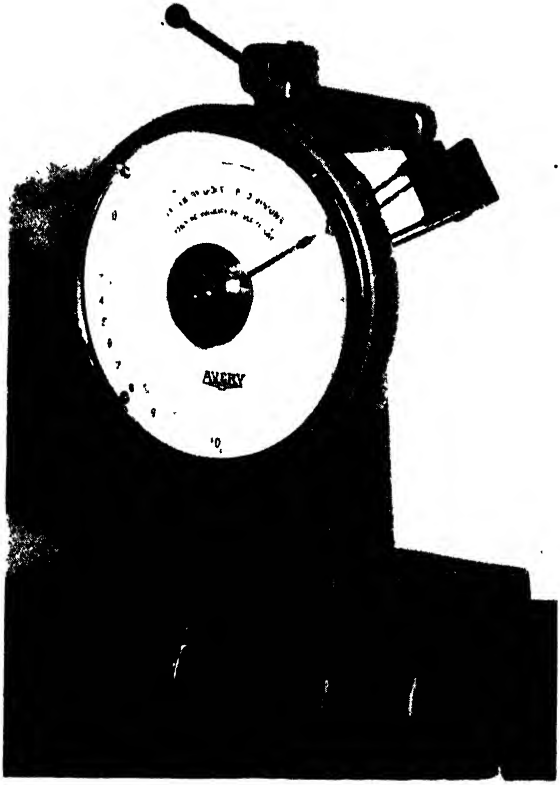

FIG. 247. AVERY IMPACT TESTING MACHINE FOR PLASTICS

The broken part of the specimen that is left in the vice is removed from the central aperture of the base, after releasing the vice.

A machine of a similar type, but equally applicable both to the Izod and to the Charpy impact tests on plastic specimens, is the Olsen one shown in Fig. 248. It is made in capacities of 25, 50 and 100 in. lb., and has a striking velocity of 11 ft. per sec. Separate pendulum hammers, which are readily interchangeable, are provided for the Izod and the Charpy tests. The anvil for supporting the Charpy specimen is adjustable for support widths of 2 to 4 in. This machine is used for impact tests in accordance with the Committee D-9 and D-20 standards of the American Society for Testing Materials.

Large Impact Machine

A large machine of the pendulum type, designed by the author, was fitted up in the engineering section of the National Physical Laboratory, and was intended for breaking railway couplings of static tensile breaking load up to 100 tons. The specimen is carried upon a swinging pendulum or "anvil" of nearly 5 tons weight, whilst the hammer, which weighs just under 2 tons, has a variable drop up to 12 ft. The residual energy after fracture is measured either by the final heights of swing of the pendulums or by means of a constant frictional resistance device, actuated by the anvil. The specimen can be broken either by a single blow or by a number of blows. An electrical device is employed for stopping the hammer after impact, and there are self-recorders for indicating the angles of swing. It may here be added that in all types of pendulum impact machine the striking face or edge must be at the centre of percussion of the lever.

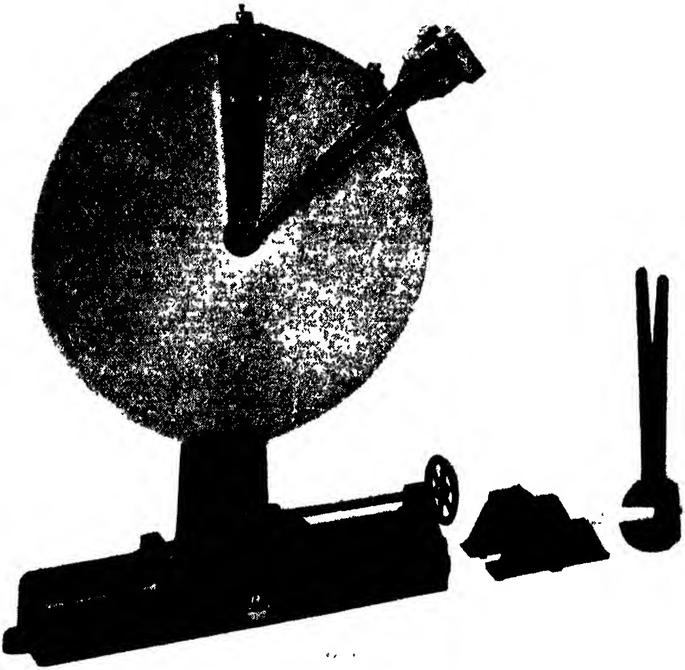

FIG. 248. CHARPY-IZOD IMPACT TESTING MACHINE FOR MOULDED INSULATING MATERIALS

CHAPTER XI

TESTING MACHINES AND METHODS

Testing Machines

For testing given specimens in one particular manner of loading, it is usually a fairly simple matter to design a machine for the purpose, but when it is required to test various shapes and sizes of specimen under different types of loading, the testing machine becomes more complex in construction. It is now usual to employ testing machines which are readily adaptable for tests in tension, compression, shear, and bending; in some cases, also, the machines are provided with the means for making torsion tests. The usual sizes of such testing machines are the 5, 10, 15, 30, 50, 100, 200, and 250 ton types, although other sizes are occasionally made; the Emery machine used at the Watertown Arsenal had a 450 ton load capacity, whilst the Olsen compression and column testing machine is of about 4500 tons capacity. The largest Baldwin Tate-Emery machine has a capacity of 10 million lb., i.e. about 4460 tons.

In most modern testing machines the principle is adopted of applying the load to the specimen by means of hydraulic pressure acting upon a ram coupled, through suitable means, to one end of the specimen, and to measure the applied load at the other end of the specimen by means of a sliding weight acting through a series of multiplying levers. The hydraulic ram not only applies the load, but it also takes up the stretch of the specimen, independently of the type of stress produced, and the lever system is simply kept floating, between stops, as the load is applied by means of the sliding weight; the lever system may be conveniently regarded as a weighing machine.

In earlier types of machine one end of the specimen was fixed to a rigid support through suitable shackles, whilst the load was applied by an hydraulic ram, and the total load was calculated from the ram area and hydraulic pressure, making an allowance for the cup-leather friction.* This method possessed an advantage in the absence of knife-edges and levers, but some doubt always existed concerning the method of the total load calculation.

In smaller sizes of testing machines the load is applied by means of a screw† and hand wheel; in other small machines, such as those employed for wire-testing, springs are used for applying the load,

---

* The friction $F = k \,.\, D \,.\, p$, where D = ram diameter in inches, p = pressure in pounds per square inch, and k = a constant varying from 0·03 to 0·05.

† The same method has also been adopted in the case of one or two very large machines, such as the Buckton and Riehlé machines.

whilst in testing machines for yarns, belting, fabric, cement, and similar purposes, dead weight is applied through a lever system. In the latter case the load is generally applied at a stipulated rate, and a hopper containing sand or lead shot is employed to run its contents at the given rate into the weight pan of the testing machine; automatic means are sometimes provided for stopping the loading immediately breakage occurs.

Another type of machine, known as the *manometric type*, arranges for one end of the specimen to act upon the diaphragm of a hydraulic pressure gauge, and the load is applied by means of a spring or screw gearing; in this method the loads can be very conveniently read off the pressure gauge, suitably engraved.

Testing machines may conveniently be divided into two types, known as the vertical and horizontal types respectively, according to whether the specimen is vertical or horizontal.

The vertical machine is the one usually preferred, as the weight of the shackle can be balanced, whereas in horizontal machines (which are chiefly used for long specimens) the weight of the shackles and other members connected to the specimen acts at right angles to the load, and it is not an easy matter to counterbalance it. A *dead weight* machine of the vertical type is shown in Fig. 291.

Apart from the ordinary vertical and horizontal testing machines designed primarily for tests in tension and compression (and in some cases, bending), there is a type of machine available for carrying out many different kinds of testing, including tests in tension, compression, bending, shear, and torsion.

These "Universal" testing machines are intended for use in laboratories where, owing to cost and space restrictions, a number of separate machines is not possible.

Apart from the single lever type of testing machine, there is the compound or multiple lever type employing a number of relatively short levers each with a suitable magnification ratio, so that the same total magnification can be obtained in a much smaller machine.

Requirements of Testing Machines

These may be very briefly enumerated, as follows, namely—

(1) The machine should be easily adaptable for different modes of stressing and for varying sizes of specimens, within limits.

(2) It should be sensitive—that is to say, it should be capable of indicating small stress differences. The sensitiveness depends upon the lever magnification, and upon the hardness and shape of the knife-edges; the radius of the knife-edge should be small and straight, and the load per linear inch should not exceed 5 tons.

(3) It should be accurate in recording loads or stresses, and its

accuracy should be capable of being readily and easily checked by a simple means of calibration.

(4) It must be designed to be easily manipulated by the person making the test, and should be free from vibration or jerks.

(5) Convenient grips of the self-centring type must be provided for the different specimens.

(6) Autographic stress-strain recording apparatus of a reliable kind should be provided.

(7) The operating levers and also the scales should be placed in the most convenient positions for the operator; usually the controls and scales are so placed that the operator stands in front of the machine.

(8) The test pieces should be easily placed in the machine, and should allow a clear unobstructed view by the observer.

Essential Features of Modern Machines

The testing machine embodies four principal features, as follows—

(*a*) *A Method of Applying the Load.* In many of the ordinary and the larger tensile testing machines a hydraulic ram is used to apply the necessary load to the test specimen. In the smaller machines the load is applied either by hand, through suitable gearing to magnify the effect, or by electrically operated gearing.

(*b*) *A Method of Measuring the Load.* The usual arrangement consists of a weigh-bridge or weighing machine of suitable leverages for reducing the value of the weighing load. The latter may either be fixed in value, with a variable leverage, or variable in value with a fixed leverage. The sliding weight on a relatively long lever arm is the most favoured method in the case of ordinary and large testing machines.

Examples of the two methods of measuring the load are given at *A* and *B* in Fig. 249 in the case of the single lever testing machine.

(*c*) *Means for Taking up the Deformation.* This is to ensure that as the test piece deforms there is no movement of the point of attachment of the specimen under test relative to the weighing apparatus.

(*d*) *An Arrangement for Holding the Test Pieces*, that is to say, suitable means for connecting the specimen to the load application and the load measurement devices.

The Single Lever Machine

This is the commonest form of testing machine for carrying out tests in tension, compression, and bending. In principle it consists of a lever, or beam (Fig. 249), with its fulcra arranged to give a considerable magnification of load at the specimen.

Referring to Fig. 249(A), the beam is arranged to rock on a knife-edge K that takes its bearing on a substantially designed column C. The load is applied to the specimen at P, and is balanced by a weight w on a scale-pan; this weight can be varied in amount.

Using the notation of Fig. 249(A), it will be seen that the pull P exerted by the load application arrangement is given by—

$$P = \frac{w \, . \, b}{a} + \frac{W^1 . d}{a}, \text{ or } \frac{1}{a}(w \, . \, b + W^1 d).$$

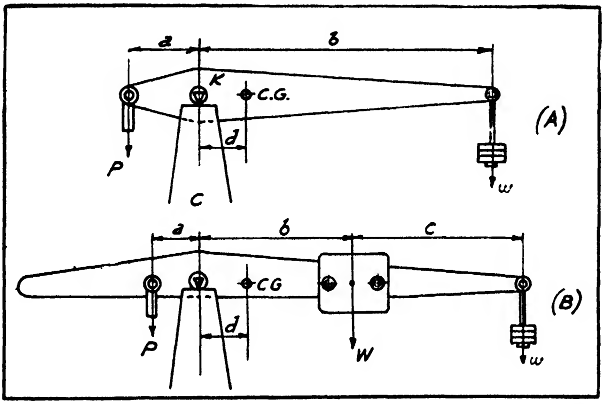

FIG. 249. ILLUSTRATING PRINCIPLE OF THE SINGLE LEVER TESTING MACHINE

where W^1 is the weight of the beam itself.

In the other method of employing a travelling weight W (Fig. 249 (B)), the leverage is then variable in order to give a wide range of load values.

In this case we have—

$$P = \frac{1}{a}\left[W \, . \, b + w(b + c) + W^1 d\right]$$

where w is an additional weight that may be used in a scale-pan at the end of the beam to supplement the weight of the movable jockey.

In each case it will be seen that by making the distance a between the fulcra of P and K as small as possible in relation to the lengths b or $(b + c)$, a big leverage or load magnification is obtained.

In some testing machines it is possible, by a rapid means of changing the fulcra, to employ two alternative sets of knife-edges, so as to obtain two distinct ranges of loading for stronger and weaker materials respectively.

The method of applying and measuring the load in the case of the single lever testing machine is shown diagrammatically in Fig. 250. The specimen under test is indicated at *S*. The load is applied by means of the hydraulic cylinder and piston shown at *P*. The piston is forced downwards by hydraulic pressure above it when making a tension test.

The load measuring beam is pivoted on the knife-edge *F*, and its travelling jockey weight *W* is regulated in position along the beam by means of hand or electric motor operated gearing, so that during the course of a test the indicator on the beam is kept floating between two stops *a* and *b*; these stops are often supplemented by a long pointer and scale arranged on the column, so that the operator can observe the beam's position more conveniently.

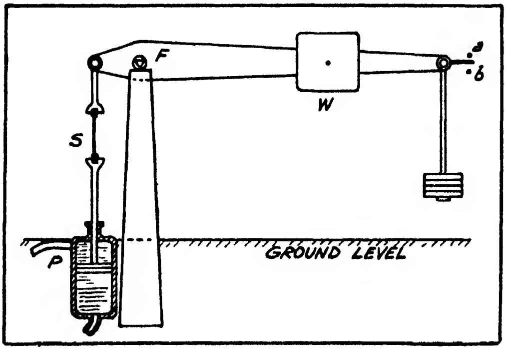

FIG. 250. TYPICAL SINGLE LEVER TESTING MACHINE

Small Portable Tensile Testing Machine

A portable testing machine for testing specimens up to a load of 20 tons, known as the Greenbat,* is illustrated in Figs. 251 and 252. As it is hand-operated it is particularly useful for carrying out tests away from the usual test laboratories. The machine consists of a cast steel body containing a fixed straining and a moving straining head, the latter being connected direct to the piston of a hydraulic cylinder. The fixed straining head is provided with a spherical seating to allow for any lack of proper alignment due to the specimen. The whole of the straining gear, including the hand-operated loading pump, is carried in the end of the cylinder body casting. The oil for applying the pressure, by means of the hand pump, is contained in the straining cylinder, and when a test is made it is pumped to the straining side of the piston.

---

* Messrs. Greenwood & Batley, Ltd., Leeds.

The load gauge (Fig. 251) is in the form of a pressure gauge calibrated to read in tons. The pressure can be released by opening a valve on the pump body. The straining head is adjusted by hand through a lever with link motion. Hardened grips are provided to take round specimens up to $\frac{5}{8}$ in. diameter and flats from $\frac{1}{8}$ in. to $\frac{5}{16}$ in. thick by $1\frac{1}{2}$ in. deep. The maximum distance between the heads is $6\frac{1}{2}$ in. The total weight of the machine is $1\frac{3}{4}$ cwt.

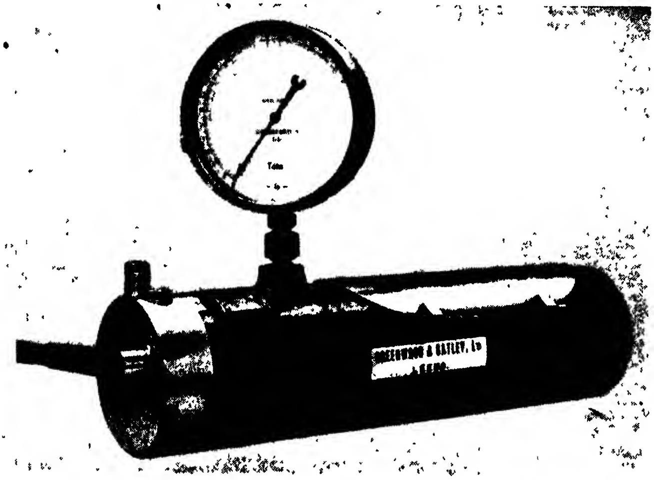

FIG. 251. THE GREENBAT PORTABLE TESTING MACHINE

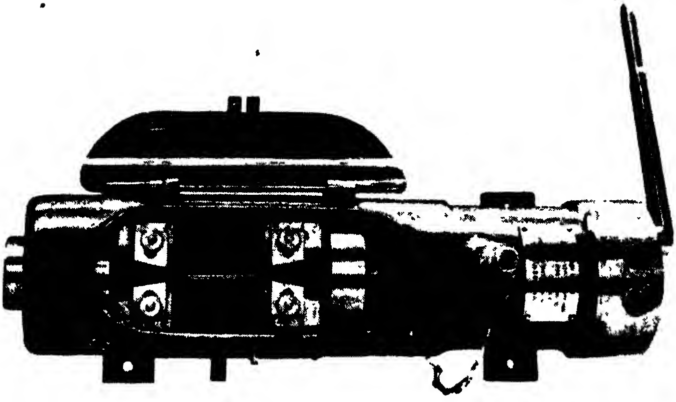

FIG. 252. THE GREENBAT PORTABLE TESTING MACHINE, WITH ITS COVER OPEN

Typical Single Lever Machines

In cases where tests have to be made upon small specimens and upon weaker materials than steel, including the non-ferrous metals and alloys, timbers and synthetic materials, it is usual to employ a simple form of testing machine such as that illustrated in Fig. 253. This type has the simplest means of operation and load indication, and is suitable for small works and technical colleges.

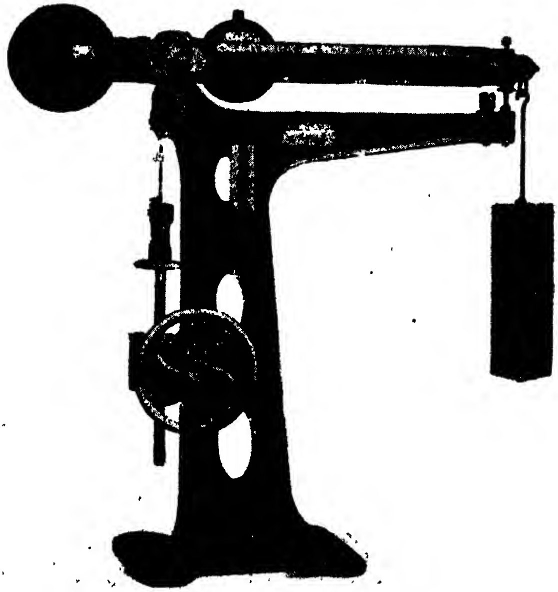

FIG. 253. THE AVERY SMALL SINGLE LEVER TESTING MACHINE

The Avery machine shown is of the single lever type, and is applicable not only to tension and compression tests, but also to bending, shearing, and hardness tests.

The load application is accomplished by means of a large hand wheel operating through gearing, nut and screw; the smaller hand wheel at the top of the screw is for making adjustments for different lengths of specimens.

The load is measured by means of a series of known weights on a suspension plate at the end of the steelyard, and also by the sliding jockey weight on the beam; this weight has a vernier scale, reading against a scale on the beam. The steelyard graduations range from zero up to 1000 lb. by 1 lb. readings. The provision of the weights on the suspension plate enables the machine to measure loads up to 10,000 lb. maximum value.

The inclusion of an adjustable rest at the carrier end of the steel yard eliminates any shock upon the specimen when applying the weights on the suspension plate. The machine is supplied with wedge grips fitted into holders, for gripping the specimens; they are controlled by a handle which raises and expands them simultaneously for the easy insertion of the test piece. An autographic stress-strain recorder is provided with the machine. The machine has a capacity up to 18 in. length by ⅝ in. diameter for tension, 10 in. by 3 in. for compression, 36 in. span by 4½ in. by 3 in. section for bending, and ½ in. maximum diameter for double shear tests.

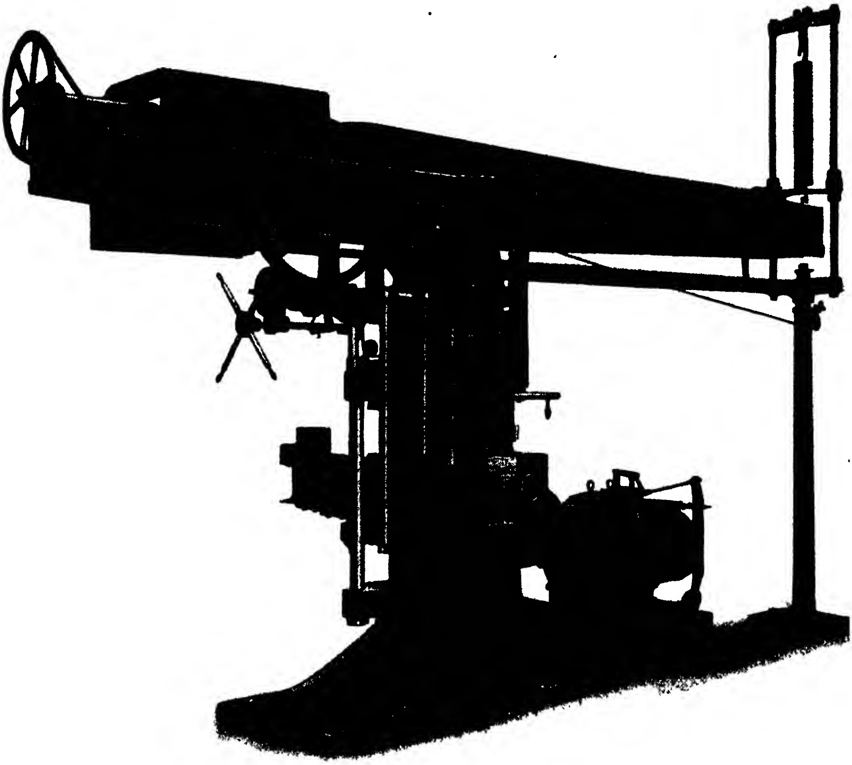

FIG. 254. THE BUCKTON SINGLE LEVER TESTING MACHINE WITH SCREW OPERATION

Fig. 254 illustrates the "Buckton" single lever testing machine, originally made by Messrs. Craven Bros., Ltd., Reddish, Stockport, in the 10, 15, 30, and 50 tons models.

In these machines the load is imposed on the specimen through a direct screw and silent worm gearing, actuated by a reversible variable speed motor working on continuous current supply; the motor is shown on the right of the main column. The load is measured accurately by means of a jockey weight that traverses a steel beam. A scale and vernier (on the weight) enable readings of the load to be made to the second decimal of tons.

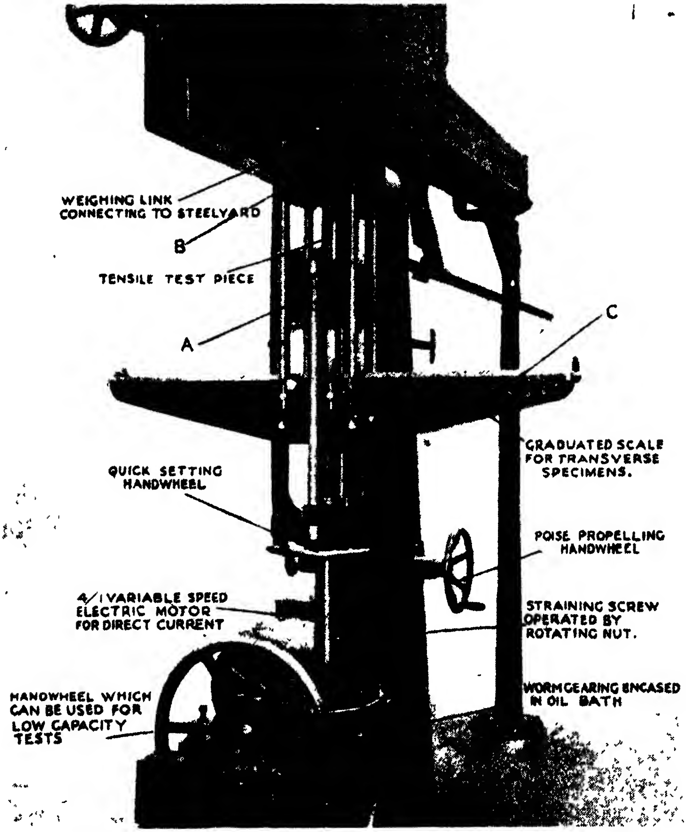

Fig. 255. The Avery-Buckton Testing Machine: Front View

This machine can be *calibrated* at any time by the direct application of standard weights; as it has only one lever and one pair of knife-edges it gives accurate results.

These machines may be fitted for testing in tension, compression, bending, shearing, and torsion. They will all accommodate specimens up to 20 in. maximum stretched length, in tension, 20 in. in compression, and 60 in. between the supports in bending tests.

The 10-ton model will admit a square section of $\frac{5}{8}$ in. in single shear, and the 50-ton model one of $1\frac{1}{4}$ in. The former model will give a torsional moment equivalent to 6000 lb. at 1 in. radius; the larger model, 50,000 lb. at the same radius.

All machines may be fitted with autographic recorders, and, if desired, electric motor operation of the jockey weight.

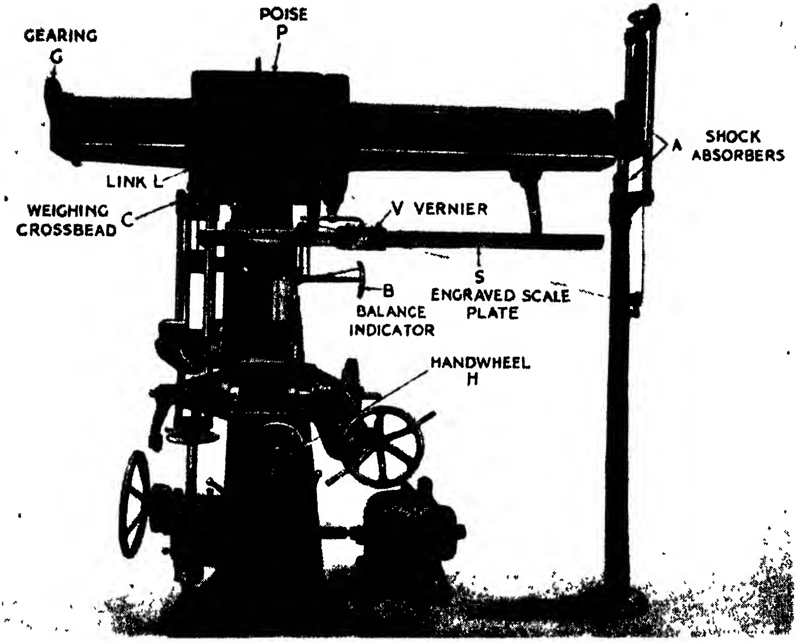

Fig. 256. The Avery-Buckton Testing Machine: Side View

The Buckton Vertical Single Lever Machine

Although employed more generally for tensile testing, this machine* is also designed for compression, transverse bending, shearing, torsion, and hardness tests with the various accessories available for these purposes. It is made in several different models from 5 to 100 tons capacities.

The straining screw is fitted with a hand wheel for making quick adjustments of the straining crosshead *A* (Fig. 255), and the large hand wheel shown at the bottom, in Fig. 255, is provided for making low load (up to 5 tons) tests by hand. The load is applied to the test

---

* Now known as the Avery-Buckton machine.

piece by the downward movement of the crosshead *A*, and the latter receives its motion by means of a worm drive which rotates a large nut member on the straining crosshead screw. In the 5-ton model there is a rotating screw. The worm shaft is driven by an electric motor or, alternatively, it can be operated by the large hand wheel previously mentioned; in the 5-ton model this is the only means provided.

The electric motor runs at 350 to 1400 r.p.m., enabling crosshead speeds of ¼ in. to 1 in. per minute to be obtained. The load applied to the test piece is transmitted to the weighing steelyard which works on knife-edges. The weighing crosshead *C* (Fig. 256) is suspended from the load knife-edge of the steelyard by means of a link *L*. The poise *P* may be either single or in two parts, consisting of a larger poise and a smaller one of about one-quarter the weight. The load on the specimen is indicated upon the scale plate *S* by means of a vernier *V* attached to the poise. With the double poise, the scale has two separate sets of graduations, one set marked to the full capacity of the combined poise and the other to suit the small poise. The poise is mounted upon rollers having ball bearings and moves easily along the steelyard by means of the hand wheel *H*, through bevel and spur gearing arranged at the back of the machine. The lay-shaft is divided at the fulcrum knife-edge and has a universal joint to allow free flotation at the steelyard. A balance indicator *B* is arranged conveniently to the operator and enables him to keep the movement of the steelyard continually under notice. Shock absorbers *A* are provided at the end of the steelyard to prevent damage when the specimen breaks. For tensile tests the test piece is located between the weighing crosshead *B* (Fig. 255) and the straining crosshead *A*.

The compression specimen is placed on the beam *C* (Fig. 255) which is suspended from the weighing crosshead by means of four rods. The load on the test piece, produced by the downward movement of the straining crosshead, is thus transmitted direct to the steelyard, where it is balanced off and indicated as in the tensile test.

Transverse bending tests can be carried out by supporting the beam to be tested on brackets on the beam *C* and applying a load to the middle of its span by means of a presser foot attached to the underside of the straining crosshead. For double shear tests the tools provided are used between the compression platens.

For hardness tests the ball-ended indenter is attached to the underside of the straining crosshead *A* (Fig. 255).

The testing machines are provided with autographic recorders of either the spring-loaded or geared types. The former recorder is illustrated in Fig. 313 on page 420.

Various types of tensile test grips for round and flat specimens and for chains and wire ropes are available with these machines.

Universal Testing Machines

Most tensile testing machines with maximum load capacities of 10 to 100 tons are provided with arrangements for making compression, shear and transverse bending tests, so that the one machine is suitable for most works and engineering laboratory general testing purposes. In some instances provision is made, in the form of special attachments, for carrying out Brinell hardness and also torsion tests in addition to those previously mentioned.

In the more recent universal testing machines, e.g. the Avery and Olsen types, designed primarily for engineering works testing purposes and for use in engineering colleges and laboratories where routine tests of various kinds may have to be made, the self-indicating principle is adopted, whereby the actual loads are read on a large diameter dial, the controls are simplified, and automatic loading—as distinct from the method of hand-operation—is employed. It is possible for the operator to remain seated throughout a test, with the dial indicator in front of him and all of the machine controls ready to hand. In the Avery universal testing machines the method of hydraulic loading is employed, with hydraulic transmission and a heavy load pendulum resistant unit. The dial load indicator is operated by hydraulic pressure. The Olsen L-type hydraulic testing machine operates on a somewhat similar principle.

A special feature of some more recent machines is the enclosure of all of the straining mechanism, hydraulic gear and control units—other than the actual control wheels, handles and switches—within a single cabinet.

The Olsen L-type Hydraulic Testing Machine

This machine,* which is illustrated in Fig. 257, has a capacity of 20,000 to 60,000 lb. (9 to 27 tons) and is designed to carry out tests in tension, compression, and transverse bending; it is also applicable to Brinell hardness testing purposes. It is especially suitable for quick routine tests on specimens of fixed types and dimensions for works and engineering laboratories.

The machine comprises two principal units, namely, *the loading* and *indicating or measuring* ones.

In the *loading system* the load is applied to the specimen by the motion of a piston. The hydraulic pressure is developed from a direct-connected gear pump, operating at a constant speed. The type of pump provided has overlapping impulses. Such a pump produces no perceptible, or measurable, pulsation during application of load.

The testing speeds are from 0 to 2 in. per min. in stepless intervals.

---

* Edward G. Herbert, Ltd., Levershulme, Manchester.

These are controlled by an 8 in. diameter pilot hand wheel, shown on the left. An additional valve complete with separate pilot hand wheel is also furnished. It is used for holding or removing the load and is shown on the right.

The piston and cylinder are ground to rigid tolerances and are designed to operate without packing of any kind. The oil used in the loading system compensates for a slight leakage because it provides a seal between piston and cylinder. With this design friction is cut to an absolute minimum and the load consequently weighed within the close limits. The piston stroke is 6 in. and the crosshead has an adjustment of 15 in. by means of a hand-crank located within easy reach of the operator. The gripping mechanism is enclosed and has positive means for opening and closing the grips.

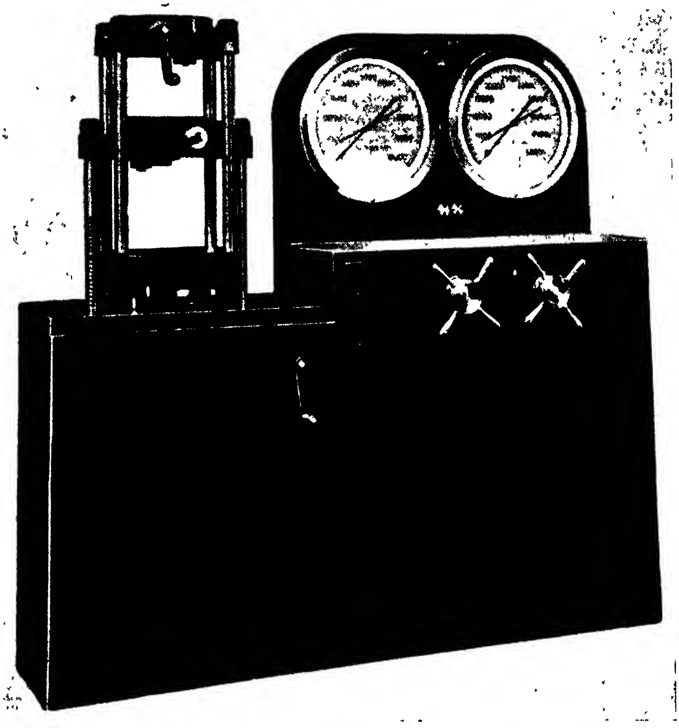

FIG. 257. THE OLSEN L-TYPE HYDRAULIC TESTING MACHINE

In the *indicating system* the load is shown on 16 in. diameter Bourdon tube hydraulic gauges, of which there are two. One indicates from zero to the full capacity (60,000 lb.); the other reads from zero to one-fifth or one-sixth full capacity. The gauges are protected by overload cut-offs, which also safeguard the machine itself against over-travel of the piston. Each gauge has a maximum load indicating hand, which is of the friction re-setting type. The gauges, mounted on a suitable instrument panel, are located above the hydraulic and electrical controls. In regard to the graduations of the standard dials, these are in divisions of 10 lb. for 0–5000 lb.; 20 lb. for 0–15,000 lb., 50 lb. for 0–30,000 lb., and 100 lb. for 0–60,000 lb. The instrument panel is provided with a convenient shelf about 15 in. × 40 in. to accommodate record sheets or note books. The machines are fitted with 110–120 volt, 60 cycle, single-phase motors.

The Avery Self-indicating Universal Testing Machines

The machine shown in Fig. 258 is available in capacities of 10, 30, or 50 tons and is suitable for tests in tension, compression, shear, hardness, and transverse bending.

It has a number of original features designed to facilitate the quick and accurate making of tests, and comprises two main units, namely, a *hydraulic loading or straining one* and an *indicating unit*; these are usually arranged at right-angles to each other for convenience of the operating controls.

The loading unit comprises a single vertical cylinder and ram for applying the load, together with grip holders and platens for tension and compression tests. The moving grip holder and transverse beam are suspended from the ram head by means of twin tension rods. A ball seating on top of the ram ensures correct alignment. Excessive swing of the holder is prevented by means of guide rollers locating on the main columns. The lower grip holder is mounted on the end of a substantial adjusting screw which fits into a nut in the base. Adjustment is through bevel gearing to a screw, the holder being guided by means of a bracket running on the main support rods. An adjustable extension scale is carried from one of the rods, a vernier being fixed to the moving grip holder. The quick-setting lever is carried from a bracket fixed to the left-hand rod. This lever has three positions, "Raise," "Lower," and "Stop." The direction of movement of the lever corresponds to the direction of travel of the ram. A trip bar fixed to the moving grip holder carries adjustable dogs, which can be set to stop the movement of the grip holder accurately at any point in either direction. This feature is invaluable for repetition work, particularly when using special tools. Platens are provided for compression tests. The top platen is located in the cylinder crosshead and is retained by a spring-loaded bolt. This platen can readily be removed and replaced by a presser foot for transverse tests.

The load indicating system has a large diameter dial carrying four sets of concentric graduations corresponding to the four capacity

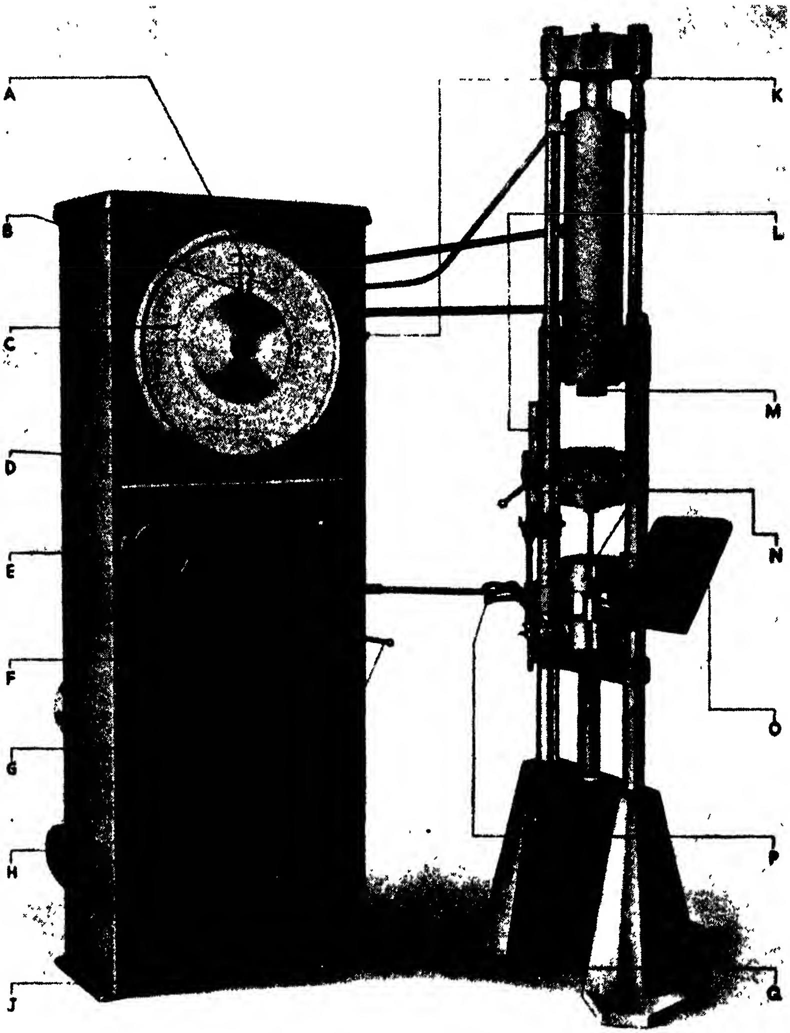

FIG. 258. THE AVERY SELF-INDICATING UNIVERSAL TESTING MACHINE

A = Maximum load pointer. *B* = Overload protection setting lever. *C* = Dial with four sets of graduations. *D* = Push button for starting and stopping. *E* = Hand wheel for changing chart capacity. *F* = Straining rate control wheel. *G* = Cabinet. *H* = Electric motor driving pump by V-belt. *J* = Straining lever and vernier knob for delicate control of load. *K* = Knob to set indicator to zero. *L* = Extension scale (0 to 7 in. by 0·01 in.). *M* = Compression test fitting. *N* = Holders for plain tensile test specimens. *O* = Adjustable book rest. *P* = Setting control. *Q* = Foundations for machine units.

ranges. Change of capacity is effected by means of a hand wheel fitted with a disc which indicates the chart capacity in use. Hydraulic locking is provided to prevent a change of capacity, except when the load is entirely removed. Change of capacity involves an adjustment to zero of the load indicator; this is effected by a knob on the side of the cabinet. By the same means the added weight of holders or other accessories used can readily be balanced. On all the chart ranges overload is prevented by means of an electrical device which stops the main pump motor when the pointer has passed the (adjustable) full-load mark. A maximum load indicator is provided to indicate the load reached during the test.

Four control valves are employed, as follows: (1) For the strain control lever; (2) for the straining rate control; (3) for the "dwell" control: and (4) a quick-setting control lever for rapid adjustment of the ram. The twin oil pumps and oil tank are housed in the bottom of the indicator cabinet; the latter also contains the motor control panel and wiring. "Start" and "stop" push buttons are arranged on the front of the cabinet.

Fig. 259 shows one of a larger capacity range of Avery universal testing machines of the self-indicating type for carrying out tests in tension, compression, transverse bending and shearing. It is made in capacities of 10 tons up to 100 tons.

In this machine both the indicating (or weighing) and straining (or loading) operations are effected through the medium of hydraulic pressure which is supplied simultaneously to the two main cylinders of the straining gear and to a small cylinder housed in the load indicator cabinet. The ram of the small cylinder, which is in direct connection with the weighing mechanism, is reduced proportionally in area to that of the main cylinders.

The large diameter dial has a front chart graduated with two concentric scales and a rear chart with double graduations; limit contacts are provided for the purpose of maintaining the load between fixed upper and lower limits. The front chart has an additional loose indicator for showing the maximum load attained.

Referring to Fig. 259 it will be observed that there are three separate units, namely, (1) the testing machine itself, (2) the control panel, and (3) the load indicating unit, arranged between (1) and (2).

The machine may be arranged for automatic control so that a test load can be maintained automatically, within small limits, upon a specimen, using the load limit electric contact devices on the back of the dial. The capacity of the motor-driven reciprocating-ram oil pump for supplying the hydraulic pressure is such that a maximum loading speed of 4 ft. per min. can be maintained; the return speed is 3 ft. per min.

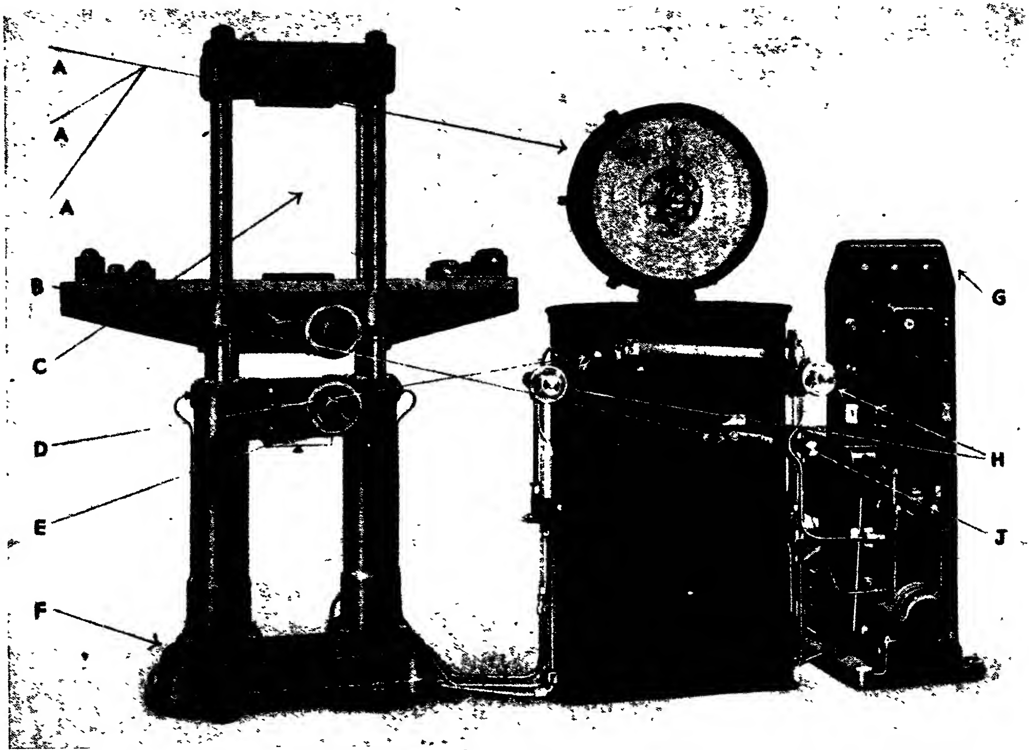

FIG. 259. THE AVERY LARGE CAPACITY SELF-INDICATING UNIVERSAL TESTING MACHINE

A = Dial indicator, with load scales on each face. *B* = Lever control for altering capacity. *C* = Space for compression and beam tests. *D* = Device for locking weighing mechanism when not in use. *E* = Hand wheels for gripping dies. *F* = Foundation or base plate. *G* = Visible "tell-tale" signal lamps on control panel to indicate operation of control switch. *H* = Tests control from either inlet or exhaust hydraulic valves. *J* = Device for automatic load maintenance.

The specimen grips are controlled by means of the two hand wheels shown near the centre of the left-hand unit in Fig. 259. The grips can be raised automatically and lowered and at the same time opened or closed. The load indicator comprises a cam resistant-type weighing mechanism; a small cylinder and the necessary reduction levers. As mentioned earlier, the ram of the small cylinder is reduced, proportionately in area to that of the main rams in the straining gear (of the left-hand unit), and the load applied at the main rams is thus reduced at the proportional ram to be transferred through the reduction levers to the dial mechanism and indicated upon the chart. In order to indicate that the electrical circuit for the maximum pointer is operating a signal lamp is provided; this illuminates the central window of the control panel.

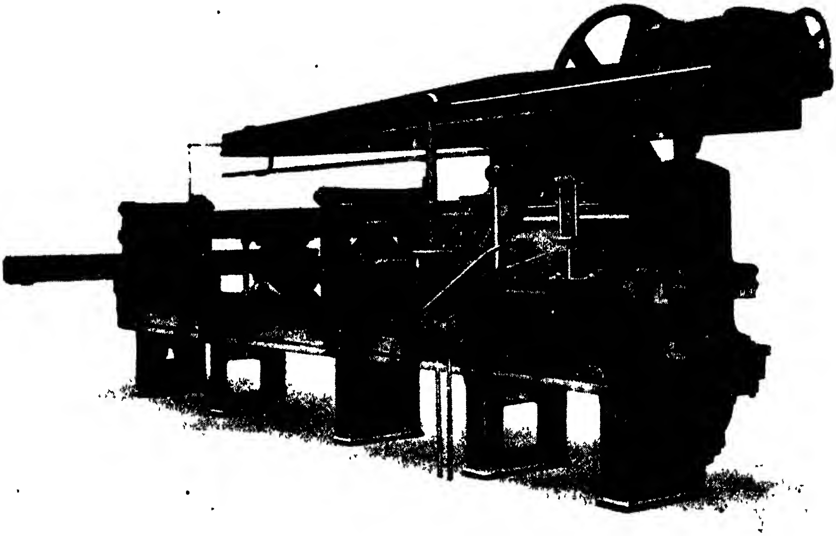

FIG. 260. THE BUCKTON 100-TON UNIVERSAL TESTING MACHINE

The Buckton 100-ton Testing Machine

When tests have to be carried out on long specimens, the vertical type of testing machine becomes inconvenient. For this reason the horizontal universal model has been designed, and as it enables the whole length of specimens up to, say, 10 ft. to be kept under observation during a test, it has another advantage over the vertical model.

Fig. 260 illustrates the Buckton 100-ton universal testing machine, in which both the weighing and load application arrangements are at the same end.

It employs a travelling jockey weight with a vernier scale for reading accurately the load, against the beam scale.

In hydraulically operated machines the ram pushes out a long sliding bed, upon which the straining head can be locked in any position suitable for the length of specimen being dealt with, while the weighing head remains in a constant position.

The lever system consists of a lower bell-crank lever and overhead steelyard with single travelling poise-weight; the weighing frame, or mechanism, is carried on frictionless supports, and the scale and vernier of the machine are usually graduated to give readings to the second decimal place in tons.

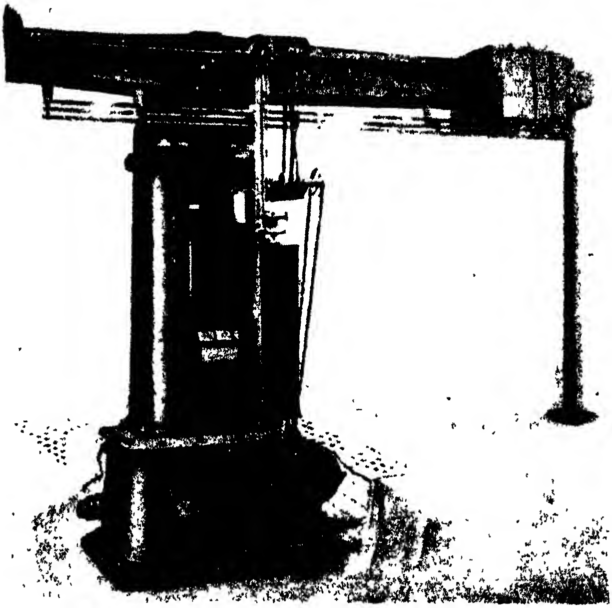

FIG. 261. THE AVERY-BUCKTON 100-TON SINGLE LEVER TESTING MACHINE

This type of machine for 10 ft. (3050 mm.) lengths is made in three sizes of 30, 50, and 100 tons capacity respectively. When required, an autographic recorder can be provided giving a diagrammatic record of the test.

The 100-ton capacity Avery-Buckton universal single lever testing machine, illustrated in Fig. 261, is of the mechanical load-application or straining pattern. The machine consists of a cast-iron base carrying the straining gear and four cast-iron standards which support a cast-iron bridge piece. Upon the latter is the steelyard for measuring the load. The straining gear comprises an electric motor, driving machine-cut gearing and actuating four steel screws. The latter, rotating simultaneously, cause the lower grip holder to move in an upward or downward direction according to the direction of rotation. The gearbox is totally enclosed and forms an oil bath, whilst ball bearings are fitted to take the end thrusts of the screw and worm.

The load is indicated by a poise on a machine-divided scale attached to the steelyard. Readings are given from zero to full capacity of 100 tons (100,000 kg.) by divisions of 1/10th ton (100 kg.) with vernier readings of 1/100th ton (10 kg.).

The poise is supported on rollers and is propelled through gearing and screw by a hand wheel. A universal joint on the poise propelling shaft permits the free vibration of the steelyard, the angular movement of which is indicated by a pointer.

Specimens are held by means of hardened steel wedge grips which slide in steel crossheads and work in spherical seatings to ensure perfect alignment.

The standard machine is arranged for testing in tension and compression, and it is unnecessary to make any alteration to the machine when changing from one form of test to the other, since the tools are always in position.

The Southwark Tate Emery Machine

This widely used American testing machine, manufactured by the Baldwin Southwark Division, Philadelphia, is shown, schematically, in Fig. 262. It consists of three elements, viz. *the loading*, *weighing* and *indicating systems*, and is made in various models ranging from 120,000 lb. (53·6 tons) to 400,000 lb. (178·6 tons).

Structurally speaking, the machine has two elements—the machine proper and the cabinet. The latter contains a hydraulic pumping unit and its control valves, as well as the separate load indicating system. The machine proper has a hydraulic cylinder integral with its base. This cylinder contains the loading ram, to which is attached the work table. The table carries two compression columns on which the moving crosshead is mounted. Between the moving crosshead and the table is the sensitive crosshead. Thus when hydraulic pressure is applied to the cylinder a specimen placed above the sensitive crosshead will be put in tension by the upward travel of the moving crosshead, and one placed below the sensitive crosshead will be compressed by the upward movement of the table. In either case reference to Fig. 262 will show that the force on the moving crosshead will always be exerted in an upward direction.

The crosshead in the base of the machine transmits this force to the weighing system—*the Emery capsule*, mounted between it and the bottom of the hydraulic cylinder.

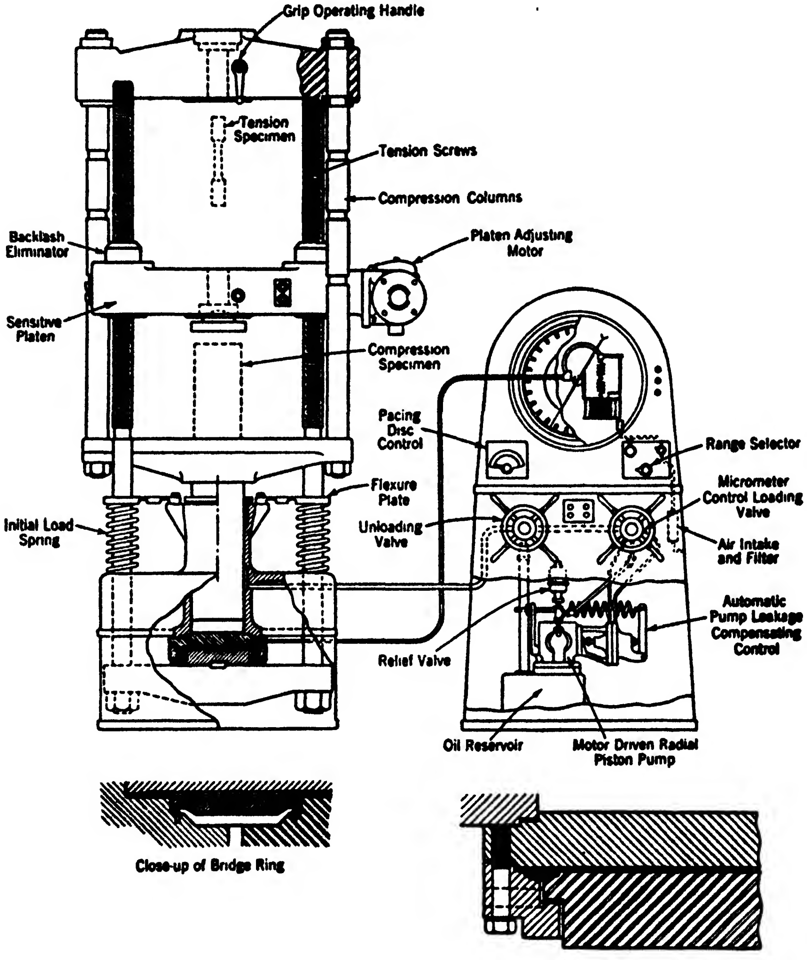

Close-up of Bridge Ring

Bridge Ring Type
Emery Hydraulic Support

FIG. 262. THE SOUTHWARK TATE EMERY TESTING MACHINE

The loading system is completely separate from and independent of the weighing and indicating elements. It consists of a variable discharge pump which operates a hydraulic ram in a packed cylinder. The pump discharge drives the ram upwards, while return is by gravity. Two valves are provided, one controlling loading and the other opening the system to drain back to the oil reservoir. Any one of an infinite number of testing speeds between zero and maximum is obtainable, and for any given control valve setting the *rate* of head motion will remain constant regardless of the load on the specimen. A micrometer valve within the loading control valve may be pre-set to repeat a number of tests at a predetermined speed while the main valve is used for rapid take-up of slack in the grips.

The weighing system consists essentially of a hydraulic support, or capsule, which is primarily a rigid cylinder and piston unit having a 0·10 in. clearance in the bore and less than 0·002 in. stroke. Pressure exerted on the thin oil film contained in this capsule is instantly transmitted to the indicating system. Because of the small volume of oil it contains and because there is practically no movement of the piston the low inertia permits quick response to load changes and is responsible for the high degree of sensitivity without loss of accuracy.

In connection with the *indicating system*, a hydraulic connection from the weighing capsule transmits pressure to the sensitive element of the indicator. A servo-motor—an outside source of energy—tends to prevent any movement of the sensitive element due to changes in hydraulic pressure. By banking several pressure-sensitive elements in line, a multi-range dial can be provided which permits quick and easy shift of ranges during, and without interrupting, test.

This outside power source provides all the power required to restore zero, to drive automatic controls and the maximum hand recording mechanisms; also to actuate an automatic load maintainer.

Principle of Hydraulic Operated Machines

Figs. 263 and 264 show in more detail the principle of the hydraulic operated single lever type of testing machine.

The beam knife-edge and the shackle knife-edge are shown at *B* and *C*, respectively, *V* being the massive cast-iron vertical column supporting the weight of the beam. The jockey weight *w* is movable along the scale *Q*, and the beam *A* is always kept as nearly balanced as possible between the stops *S* (which are usually provided with spring buffers) by moving the weight *w* along the beam towards the stops *S* as the load is applied. The manner in which the specimen *E* is gripped for a tension test is indicated; it will be observed that the hydraulic ram *F* acts vertically downwards, and thereby applies a load in the same direction, through the rods *G* and crosshead *L*, to the lower end of the specimen. Trunnions or pivots are provided at each end of the specimen grips.

The force F upon the specimen, as shown in Fig. 263, is given by the relation*—

$$F = \frac{w \cdot y}{x} + \frac{w_1 \cdot y_1}{x}$$

where w = weight of jockey, x = the distance shown in Fig. 263, y = the distance of the weight w from B, w_1 = weight of beam, and y_1 = distance of beam C.G. from B. The beam is assumed to be balanced when the jockey weight w is over knife-edge B.

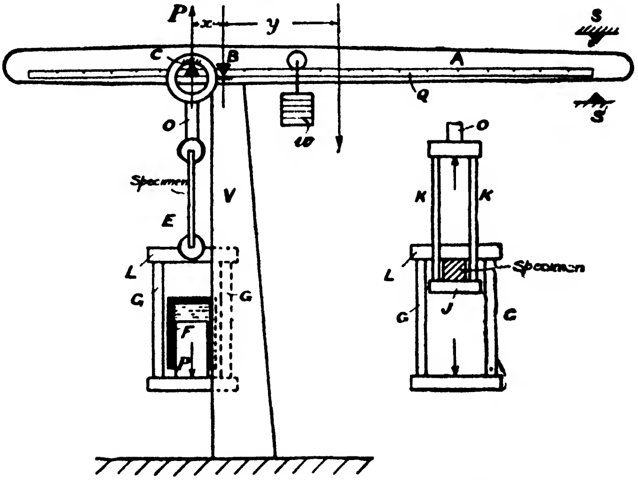

FIG. 263 FIG. 264

The diagram shown in Fig. 264 illustrates the principle of the method of making compression tests in this type of machine. Fig. 265 illustrates the method of making transverse bending tests; instead of knife-edges for supports, semi-cylindrical rollers are often provided to take up the same direction of slope as the beam at its ends. Deflections can be measured by the same means as in the case of wooden beams.

Calibration of Vertical Testing Machines

The two quantities which it is necessary to check in this type of machine are: (*a*) the distance between the knife-edges, and (*b*) the value of the beam plus the jockey weight.

If (*b*) is determined first, then (*a*) can be easily checked. The weight of the jockey may be found by first balancing the beam, with

---

* It is assumed that the knife-edge friction is negligible; otherwise, the relation becomes $F = \frac{w \cdot y}{x} + \frac{w_1 \cdot y_1}{x} + k \cdot w$, where k is a constant, and $k \cdot w$ represents the frictional moment about B.

no specimen in the beam shackles, and then by hanging a known weight m upon the beam shackle; the jockey weight has then to be moved along through a distance d to balance the beam again. If w = the jockey weight and x = the knife-edge distance—

$$w = \frac{m \, . \, x}{d}$$

A better method, which is independent of the knife-edge distance, is first to balance the beam, then hang a known weight W at a distance D from the beam fulcrum B (Fig. 263). The jockey weight must then be moved along through a distance d to balance again.

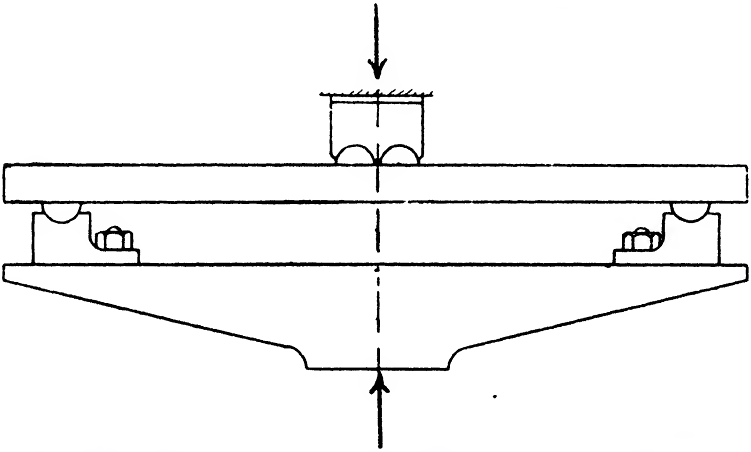

FIG. 265. TESTING MACHINE TRANSVERSE BENDING ARRANGEMENT

Then $$w = \frac{W \, . \, D}{d}$$

Having found w, the distance x between the knife-edges may be found by the previous method, or by restoring balance by adding a known weight W to the beam at a distance D from the knife-edge B (Fig. 263).

Then $$x = \frac{W \, . \, D}{m}$$

The second method is independent of the value of the jockey weight.

Horizontal Testing Machines

This type of machine enables tests to be more readily observed, longer specimens to be employed, and in many cases is more convenient for the larger sizes of testing machine.

The Werder type of testing machine, which is shown diagrammatically in Fig. 266, is widely used on the Continent.* It consists of a ram connected to the fulcrum of a bell-crank lever in such a manner that the ram and lever move out at the same rate as the specimen stretches during a test. The lever is provided with a travelling jockey weight, and at its longer end is limited in movement by means of stops.

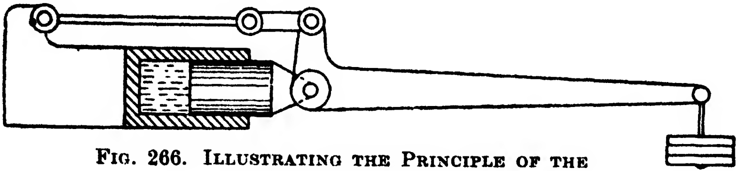

FIG. 266. ILLUSTRATING THE PRINCIPLE OF THE WERDER TESTING MACHINE

One end of the specimen is attached to a shackle fixed to the frame of the machine, whilst the other end is coupled, through a similar shackle, to the smaller arm of the bell-crank lever. In this manner it is an easy, and at the same time an economical, matter to provide for very long specimens by moving the simple "fixed-end" supports along guides. In the 100-ton type Werder machine specimens up to 30 ft. in length can be tested in tension or compression.

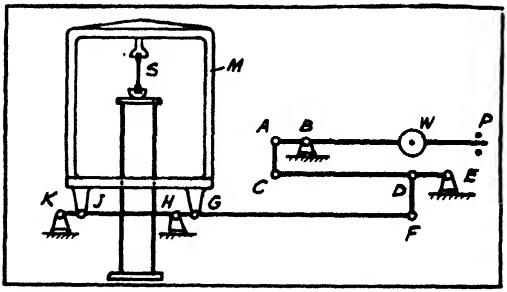

FIG. 267. SHOWING PRINCIPLE OF COMPOUND LEVER TESTING MACHINE

In the actual machine, instead of the bearings shown in the diagrammatic illustration of Fig. 266, knife-edges are provided for the bell-crank lever. A high ratio of leverage (500: 1) enables small weights to be employed upon the balance arm.

Torsion and transverse tests can also be made upon this type of machine.

* This type of machine was employed by Bauschinger in his classical researches.

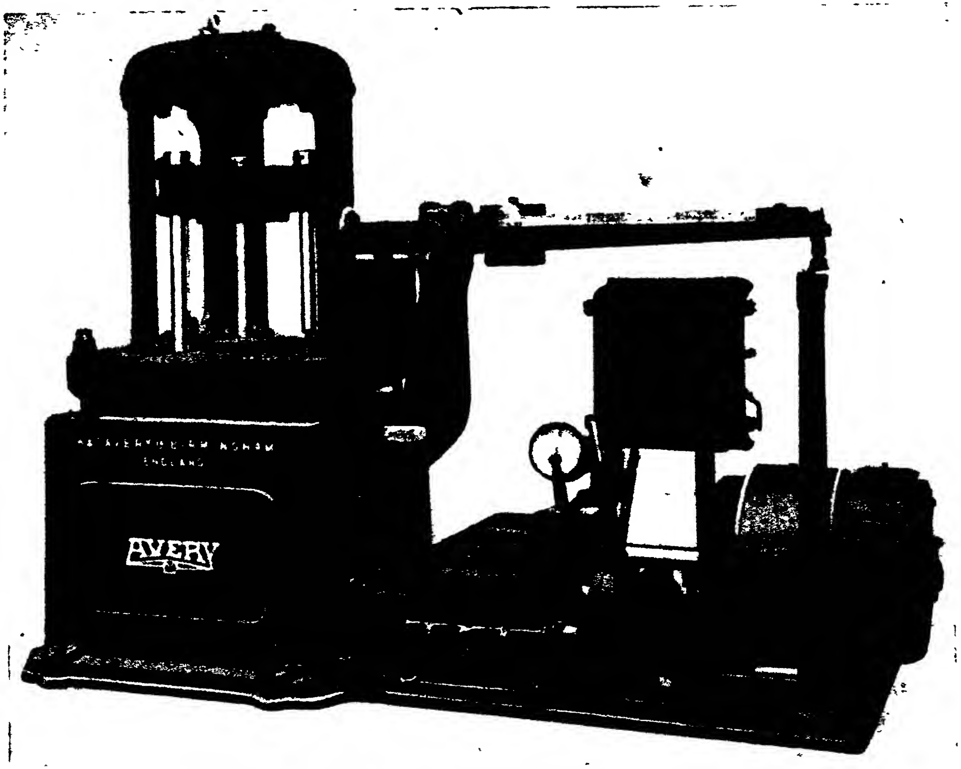

FIG. 268. THE AVERY COMPOUND LEVER TESTING MACHINE

The Compound Lever Machines

There is a class of testing machine, distinct from the single lever beam type, in which compactness is obtained by dispensing with the long poise beam and substituting a series of pivoted levers, each contributing a multiplying ratio of leverage. In this way the same total load effect is obtained in a very much smaller space and floor area than in the single lever machine.

The compound lever machine is usually more convenient to use, but it suffers from the disadvantage of having several knife-edge bearings to introduce friction; the amount of the frictional losses can, however, be ascertained by careful calibration.

The principle of one of these machines is illustrated diagrammatically in Fig. 267, showing how the lever systems give a combined relatively large magnification of the poise arm load at the specimen. The specimen *S* to be tested in tension receives its pull at the top through the frame member *M*; the latter is forced upwards at *J* and *G* by means of the lever *KHF* pivoted at *K* and *H*. The poise weight *W* travels along the steelyard arm *BP* and applies a greatly magnified load at *D* through the lever system shown.

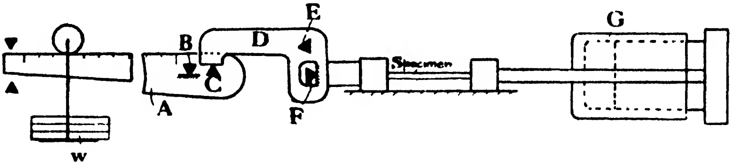

FIG. 269. SHOWING THE PRINCIPLE OF THE HORIZONTAL TESTING MACHINE

Fig. 268 shows the Avery compound lever testing machine. In this machine the main weighing levers, which are all fitted with hardened steel knife-edges, are entirely enclosed within the base and connect up to the steelyard placed at a convenient height for the operator.

The steelyard is graduated up to the full capacity by subdivisions of 0·01 of a ton (10 kg.). Finer subdivisions than this are shown by a dial indicator at the end of the steelyard.

The straining system consists of a hydraulic cylinder and ram; it may be arranged with change gears, driven by belting from the machine shop countershaft, or, as shown in the photograph, driven direct by an electric motor.

The main shaft in power driven machines communicates to the straining screw through the medium of worm gearing, thus providing the smoothest possible method of straining, several changes of speed being provided to facilitate the testing of every kind of material.

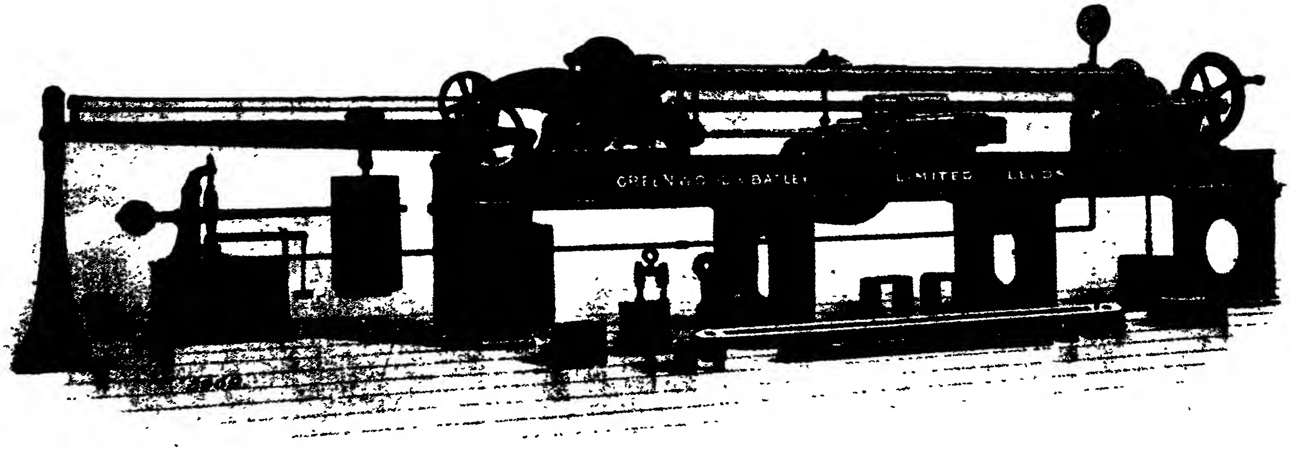

FIG. 270. THE GREENWOOD & BATLEY 50-TON HORIZONTAL TYPE TESTING MACHINE

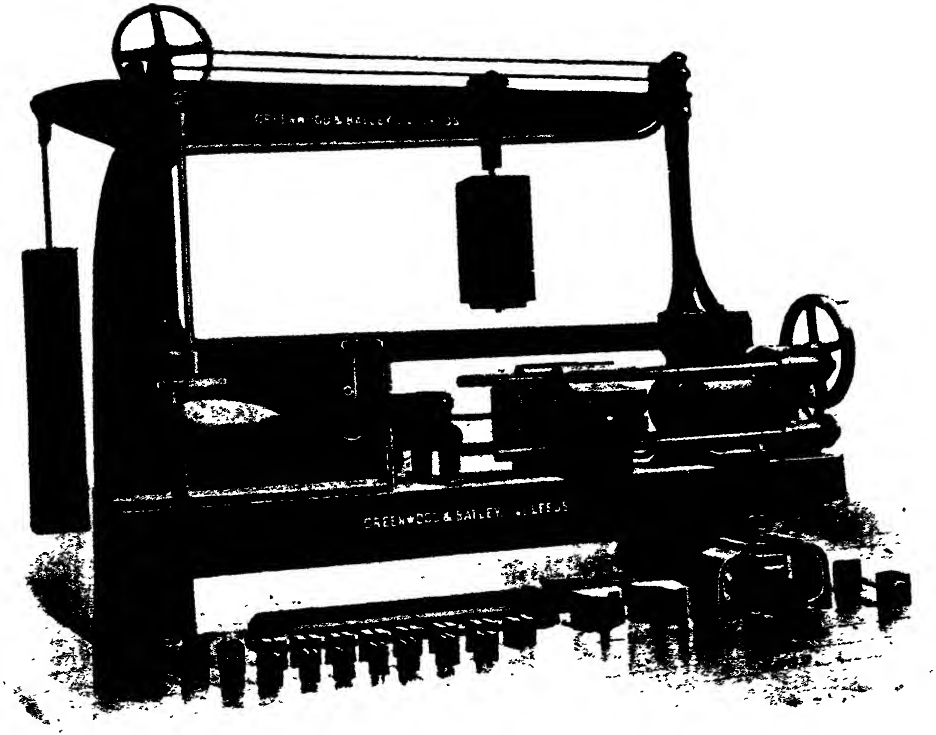

FIG. 271. THE GREENWOOD & BATLEY COMPOUND TESTING MACHINE

This machine is made in 10-ton and 50-ton capacities. The former will deal with specimens 15 in. long in tension and compression; the latter will accommodate 24 in. specimens. Bending tests can be made in both cases on beams of 36 in. span.

The autographic stress recording apparatus is shown above the weighing beam in the centre.

The Greenwood & Batley machine is shown diagrammatically in Fig. 269, whilst Fig. 270 is a photographic reproduction of a 50-ton type working on the same principle.

Referring to Fig. 269, it will be seen that one end of the specimen is attached, through suitable shackles, to the hydraulic ram *G*, whilst the other end is connected to the smaller arm *F* of a bell-crank lever *D*, at the knife-edge *F*, *E* being the fixed knife-edge or fulcrum. The longer arm of the lever *D* is in contact with the knife-edge *C* of a beam or weighing lever *A*, pivoted at *B*.

In this way the force, supplied by means of the ram upon the specimen, is reduced by the lever system (*D* and *A*) to a small value on the weighing arm, and is there readily balanced by means of travelling jockey weight *W*, actuated by means of a long screw, as in other types.

The leverage reduction at *W* is usually 1 to 100.

In the 50-ton type of machine illustrated in Fig. 270, specimens may be tested in tension, compression, bending, and shear by suitable adapters; tension specimens up to 6 ft. in length may be employed. A crosshead is provided at the ram end, through which four horizontal screws geared together at their outer ends by means of spur wheels pass; these screws work in nuts provided in the movable crosshead. In this manner the movable crosshead can be brought into any position along the bed to suit the length of specimen. The leverage of the weighing system is 112 to 1 in this case; the travelling weight is of the pendant type, and the weight can be varied in steps up to 1000 lb.

Other types of testing machine are made by the same firm, in which the weighing arm is arranged over the ram and specimen, thus making a more compact arrangement, as shown in Fig. 271. In most types of horizontal machine the crosshead is arranged to move upon rollers or runners, in order to reduce friction upon the ram glands, and to take the weight from off the specimen.

The Denison Universal Testing Machine

A useful compact type of testing machine* of the 10,000 lb. load class is that illustrated in Fig. 272, and used by the Department of Scientific and Industrial Research.

---

* Samuel Denison & Sons, Ltd., Leeds.

It is of the vertical pattern with conveniently placed controls so that the operator has a clear view of the specimen under test. This machine belongs to the compound lever class, the system of levers being shown diagrammatically in Fig. 273.

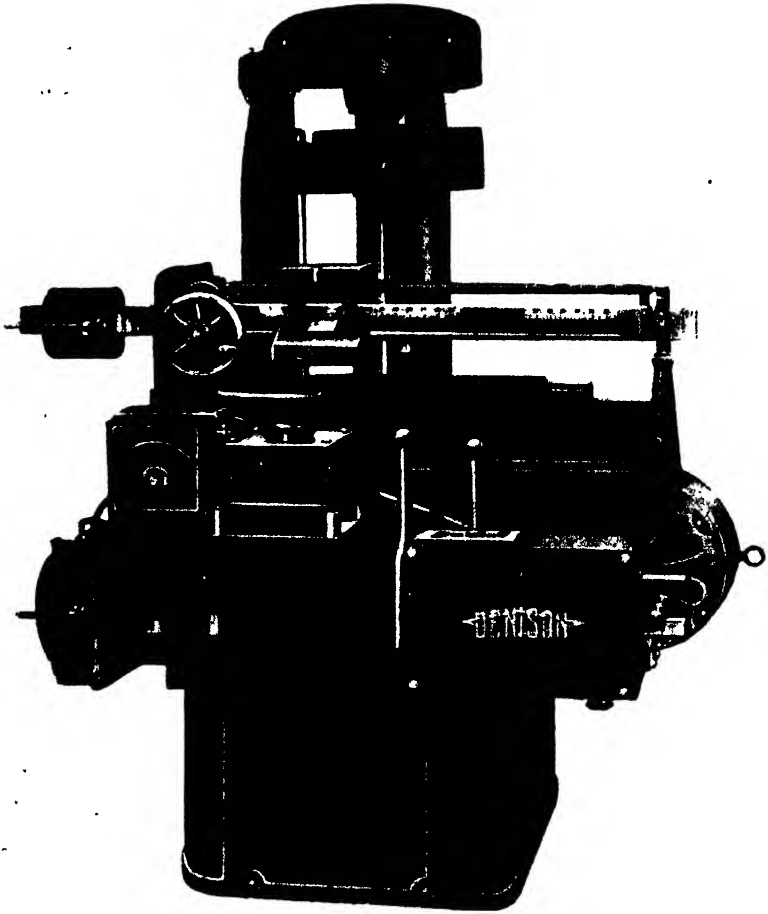

FIG. 272. THE DENISON UNIVERSAL TESTING MACHINE

It will be observed that tension tests are carried out at *A* and the compression, transverse, and shear tests at *B*. *C* is the weighing wedge gripping box, and *D* the weighing platform. *E* represents the load, *F* the resistance, and *G* the straining frame. *H* indicates the weighing levers, *J* the steelyard, and *K* the travelling poise weight.

The weighing table is extended on either side so that transverse specimens can be accommodated. On its upper surface rest three semicircular castings, which shroud the straining rods and act as struts for the upper or weighing wedge box. The table has four legs carrying bush bearings resting directly on the main knife-edges of the two first levers.

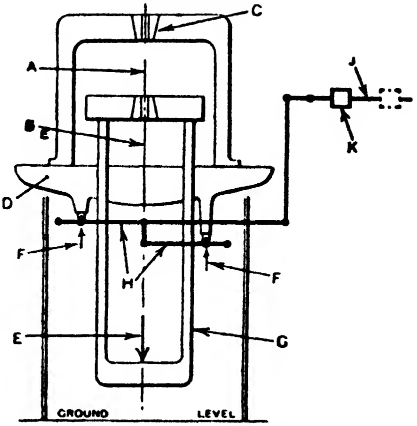

FIG. 273. SHOWING PRINCIPLE OF THE DENISON UNIVERSAL TESTING MACHINE

The fulcrum of the steelyard is arranged upon a standard, the poise screw being above the blade. The poise weight *K*, which is in two parts, is propelled by the screw mentioned. One part of the weight is a traveller and one a follower, the former being one-tenth of the total. The drive is from a ½ h.p. motor of the shunt-wound variable speed type. A four-speed change-gear is used; one gear is for setting and three for straining. Other intermediate speeds can be obtained by means of the motor itself. A tachometer geared to the motor drive indicates the speed of straining.

This machine is also made in the 5, 10, 15, 30, and 50 tons sizes.

The Riehlé Testing Machine

This machine,* which is illustrated in Fig. 274, is of the compound lever type, the load being applied to the specimen by means of two large vertical screws *S*. The crosshead *C* is arranged to work downwards, so that tension tests can be made in the space between *C* and *D*, and compression tests in the space between *C* and *T*. In each case the load upon the specimen is measured by the force upon the Table *T*, which rests upon a pair of horizontal knife-edges seen below it in the illustration. The load is equally distributed in regard to the knife-edges of the main weighing levers, the ends of which are shown at *e* and *f*, the latter knife-edge being fixed in the second symmetrical lever. In this manner the load on the specimen is reduced to about one-sixteenth of its value at *f*; this force is further reduced through the horizontal lever *H*, which is connected at its smaller end *h*, through a rod *r*, to the weigh beam *L*. The movement of the travelling weight *W* balances the load. The ratio of the lever magnification system, when the weight is at the extreme end of the beam, is about 4500 to 1. The

---

* Manufactured by the Riehlé Bros. Testing Machine Co., Philadelphia, U.S.A.

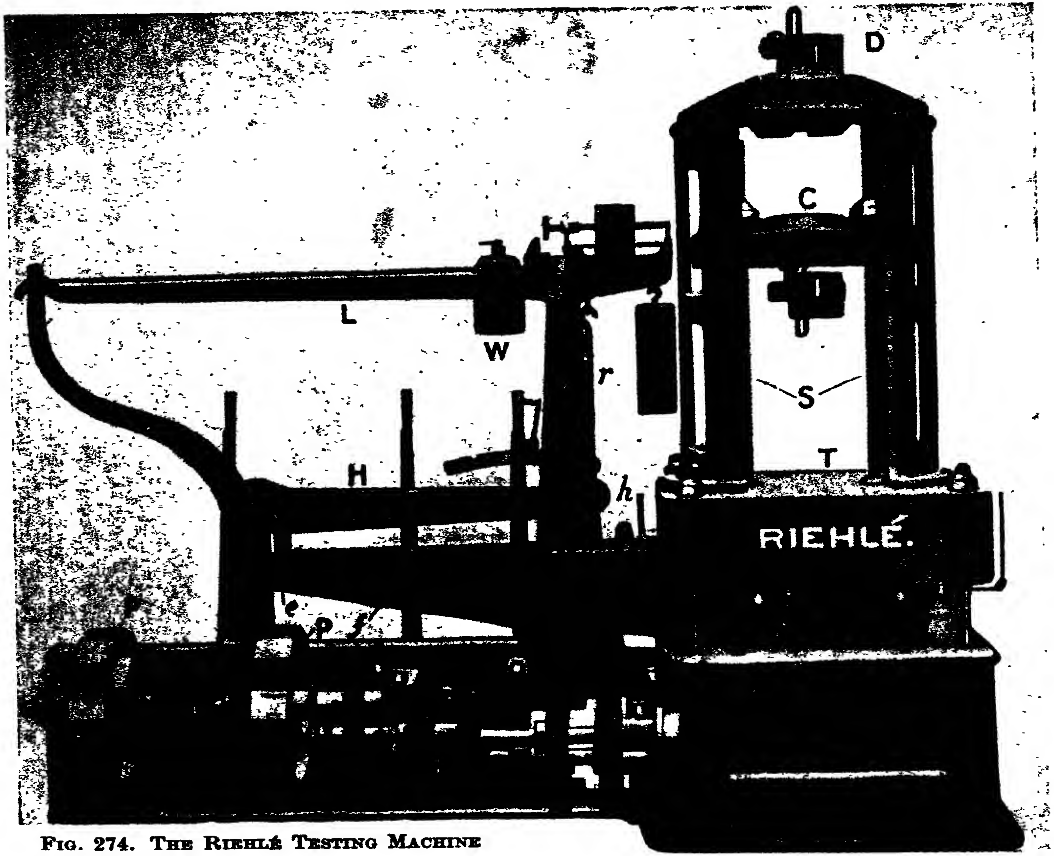

FIG. 274. THE RIEHLÉ TESTING MACHINE

vertical load screws S are operated through the gearing shown beneath the horizontal levers, and by means of sliding dogs different speeds or rates of loading can be obtained with the different gear-wheel combinations; usually an electric motor driving through a belt to one of the pulleys P is employed. In the particular machine shown a reverse gear is provided.

The Riehlé machines are made in a number of different sizes, adaptable for all kinds of tests, ranging from the 1,000,000 lb. size (used for crushing tests of concrete, etc.) down to the 20,000 lb. type; the machine shown in Fig. 274 is the 200,000 lb. type. The principle of all the machines is the same, the mode of loading being either hydraulic or by means of either two, three, or four vertical screws geared together.

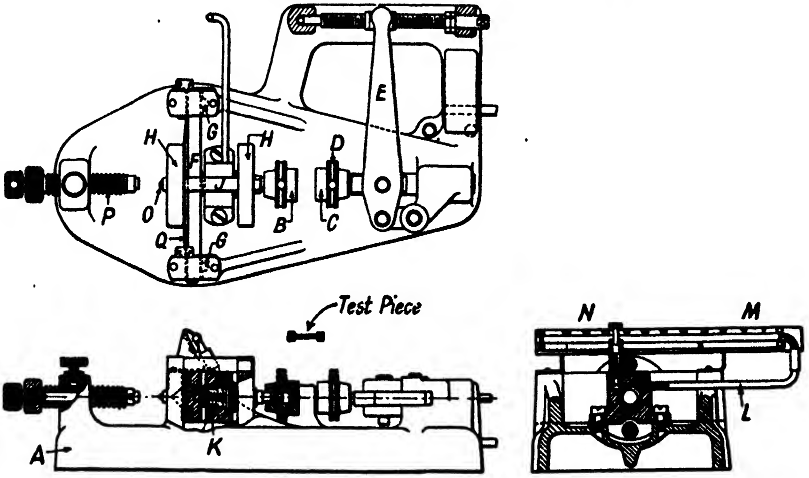

FIG. 275. THE HOUNSFIELD TENSOMETER TESTING MACHINE

Autographic apparatus is provided for stress-strain diagrams, and an automatic controlling device can be fitted, if required, for moving the jockey weight W. Electric contacts are arranged at the end of the beam L, so that when this end rises it makes contact, and completes the circuit of an electromagnet, which causes the weight-driving screw to be put into gear with the independent driving shaft. The weight W then moves along the beam towards the smaller end until the balance is restored and the contacts broken.

The Tensometer Testing Machine

This machine, in addition to obtaining autographic records of tensile tests, i.e. stress-strain diagrams, also enables Brinell hardness, notched-bar, bend and strip tests to be made, so that in effect it combines several machines in a single unit. It is available in three different sizes with maximum tensile loads of 2, 1, and $\frac{1}{4}$ ton, respectively. With the smallest of the eight different sized test pieces, varying in cross-sectional area from $\frac{1}{100}$ to $\frac{1}{4}$ sq. in., it is possible to apply tensile stresses, with the above loads, of 200, 100, and 25 tons per sq. in. respectively.

The machine is illustrated in plan, front and side elevations in Fig. 275 and in external view in Fig. 276. Referring to Fig. 275, the test piece is held in the half-chucks *B* and *C*, the two halves of each pair being held together by a ring *D*. Turning a handle on the square end of the screw turns lever *E* clockwise, pulling towards the right, through the test piece, the discs *HH* (joined by *J*) which abut on the centre of spring beam *F*. The deflection of *F* is proportional to the load and is magnified for measurement by piston *K* displacing mercury along a thermometer tube *M* (at atmospheric pressure) mounted on graduated scales seen in the end view. This mercury column is adjusted to zero before each test by the screw *N*.

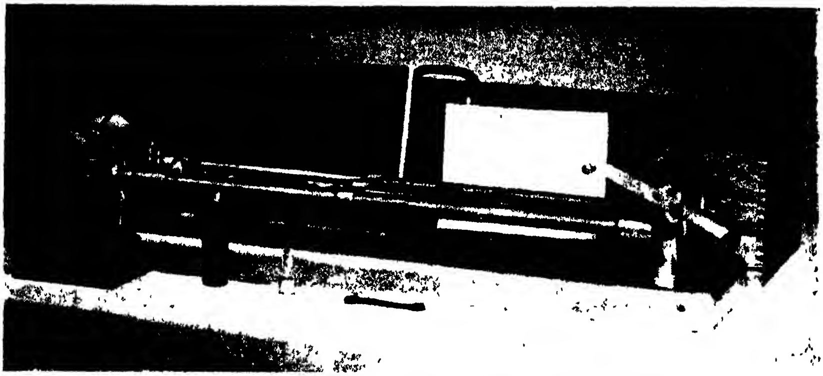

FIG. 276. THE HOUNSFIELD TENSOMETER TESTING MACHINE

For tests of Brinell hardness the specimen is held against the ball *O* by advancing the screw *P* and then locking this by the top screw. The inner screw then applies the appropriate pressure, as shown by the mercury column, through the plunger which can slide, but cannot turn, in the locked outer screw *P*.

The drum of the autographic recorder is turned by a cord attached to the lever, so that one turn of the handle advances the paper 2 mm. On the horizontal scale of the mercury column slides a cursor, which is caused to follow the mercury column by the operator's left hand as his right hand turns the handle. This cursor is linked to an arm carrying a needle, which is guided over the top of the drum and mounted so as to prick the paper when depressed (preferably by the right hand) after, and not before, the material has completely responded to an increase of load as shown by the mercury first rising and then ceasing to fall back.

Fig. 277 illustrates the results of both tensile and notched bar tests, made on 3 per cent nickel steel specimens with the Tensometer. The ten records refer to five different heat-treatments, all being oil-quenched from 850° C. and then tempered to the following temperatures; namely, 200°, 400°, 600°, and 650° C. It is thus possible to correlate the results of the tensile and notched bar tests on similar specimens and to obtain

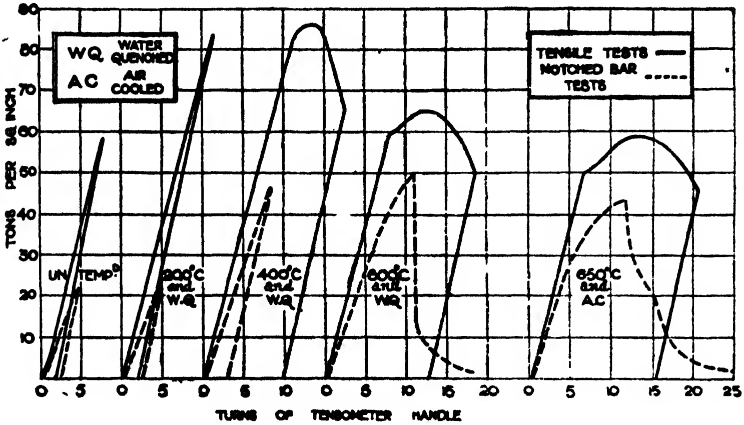

Fig. 277. Typical Test Records.

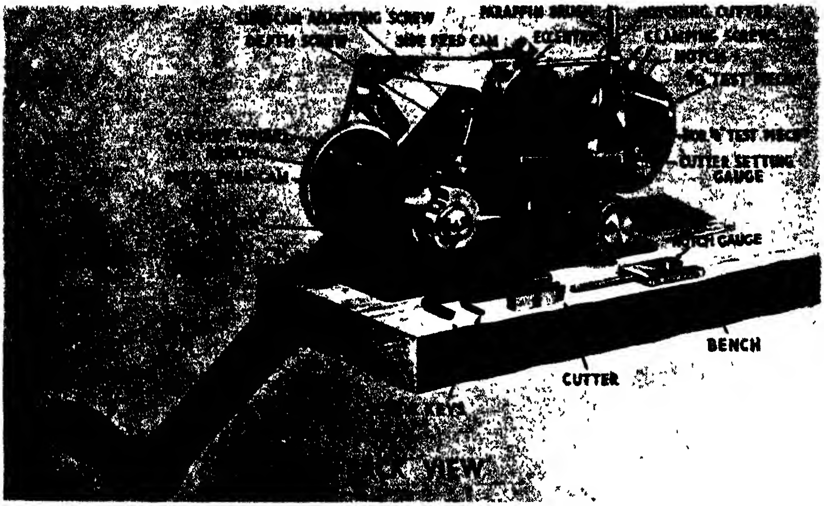

Fig. 278. Hounsfield Notching Machine for use when preparing Notched Bar Specimens.

(28), to reduce friction due to the heavy load, and with nuts (29) and a dust cap (30).

Movement of the drawbar is effected by rotation of the capstan head (27), which is keyed to the threaded sleeve (25). This movement is transmitted through the test piece, which is held in shackles (15 and 18), to the drawbar (12) and causes the spring (3) to be compressed. The stress on the test piece is balanced by the load on this spring and its magnitude is indicated by a pointer (8) on the gauge (11). A second pointer (9), mounted and frictionally rotatable, in the glass front of the gauge, shows the maximum load applied to the test piece.

The spring (3) is housed in a hollow cylinder (4), in which a leather cup-washer (2) is a good sliding fit. A little oil introduced into the cylinder by removal of the head (1) forms an effective seal between the wall and the washer. The air pocket formed by 1, 2, and 4 acts as an elastic buffer to absorb shock due to the sudden recovery of the spring when the test piece breaks. A special key with two pins is supplied for removal of the head.

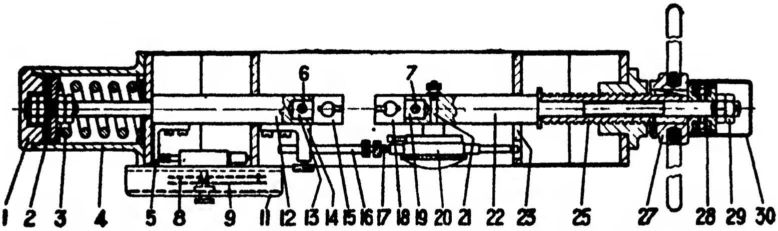

FIG. 282. PRINCIPLE OF THE GRIFFIN-GALE TESTING MACHINE

Various types of shackle are available to suit different types and shapes of test piece and according to the type of test that it is required to carry out. All shackles have a common method of attachment to the drawbars by means of a shank (13 or 19) fitting into a hole in the end of the drawbar, and an easily-removed taper pin (6 or 7). Various grips are also available, adapted for different types of test and intended as clamps to hold the test piece in the appropriate shackles.

The strain gauge for measuring deformations of the test piece is shown in Figs. 281 and 282. This greatly increases the usefulness of the machine and the fitting of it is strongly recommended. A bracket (14) screwed to the drawbar (12) carries an adjustable rod (16), which butts against the spindle of the dial gauge (20), reading in 0·010 mm. up to 25 mm. Thus, the differential movement of the drawbars caused by the deformation of the test piece is directly indicated by the strain gauge. The dial of the gauge is rotatable, allowing the zero of the scale to be brought to the pointer, whatever the position of the pointer.

The autographic recorder consists of two parts, namely, a table (66) (Fig. 283) attached to the right-hand drawbar and a bell-crank lever (62) attached to the left-hand drawbar. The longer arm of the crank carries a pencil (64), attached to a flat spring, and the shorter arm abuts against an adjustable stop (61). This stop is adjustable in the bracket (60) which is fixed to the upper member of the machine.

The application of a load to the test piece causes the axis (63) of the bell crank to move to the right, and since motion of the shorter arm is prevented by the stop (61), the pencil attached to the longer arm moves over an arc substantially at right angles to the axis of the machine and proportionally to the applied load. Deformation of the test piece causes a relative movement between the pencil and a record card, carried in the spring clips (67), in a direction parallel to the axis of the machine, thus resulting in the drawing of a load-deformation curve.

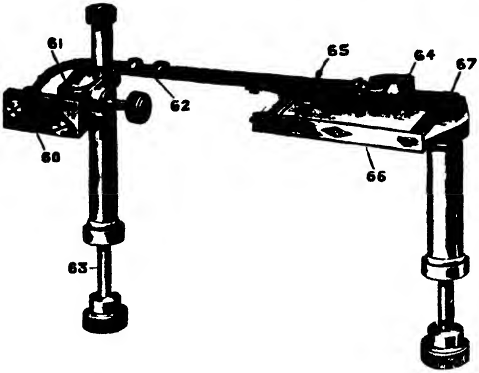

Fig. 283. The Griffin-Gale Strain Gauge

The bracket (60) is used for attaching the recorder to the machine and the bell-crank pencil holder is attached by means of the screwed stem (63) through a vertical hole in the left-hand drawbar, using the knurled nut to lock it in position.

Special attachments are provided for making compression, Brinell, and cupping tests.

Manometric Type Testing Machines

In this type of testing machine one end of the specimen is attached, by suitable means, to the screw or hydraulic ram providing the necessary force, whilst the other end is connected through a crosshead and arms to a flexible diaphragm forming the cover of a chamber filled with a fluid, such as mercury. When the load is applied to the specimen, the diaphragm experiences the same force and transmits pressure to the liquid inside the chamber, which is recorded by a calibrated pressure gauge or a mercury column; the load upon the specimen is then equal to the effective* area of the diaphragm multiplied by the recorded pressure per unit area.

Fig. 284 illustrates a small machine, based upon the above principle, for testing wires, strips, rods, and cables in lengths up to about 18 in. and for loads up to 5000 lb. (in a larger type, loads up to 10,000 lb. are provided for). The load is applied by means of the hand wheel shown upon the left, actuating a square-threaded screw attached to the crosshead. A quick-return motion is usually provided in this class of machine for bringing the movable crosshead back after a test.

It is essential that the diaphragm itself should offer practically no resistance, otherwise the loads will not be proportional to the pressures observed; this effect may be tested for by hanging weights over a pulley from a wire attached to the diaphragm crosshead, or by inserting a calibrated tension spring or balance in place of a specimen, and comparing the calibrated with the recorded loads.

The Thomasset testing machine is another example of the manometric principle applied on a large scale; in this machine the specimen is vertical, and the lower end is connected through shackles to a hydraulic ram. The upper end is attached to a horizontal lever at a point between the fulcrum and the smaller end, which is connected to a horizontal diaphragm consisting of a flexible metallic plate and a sheet of rubber, covering a chamber filled with mercury. The load upon the specimen is indicated by the height of mercury in the vertical gauge connected with the chamber.

The Emery testing machine, built in 1879, and installed in the Watertown Arsenal, U.S.A., also utilizes the manometric principle. This machine is capable of testing specimens up to 28 ft. long and 30 in. wide in tension, and up to 30 ft. long in compression, the maximum loads capable of being exerted being 360 tons and 480 tons respectively. The load is applied hydraulically, and is measured by means of a compound lever system. Between this system and the specimen is a group of four manometric diaphragms connected by small bore pipes with four other small diaphragms, the object being to reduce the loads to a much smaller value for transmission through the level system to the weighing arm. The reduction in the diaphragm system is 20 to 1, and in the whole system 420,000 to 1. In this machine flexible steel plates or connecting strips are employed instead of knife-edges, in order to reduce the friction.

---

* The projected area upon a plane normal to the axis of the specimen.

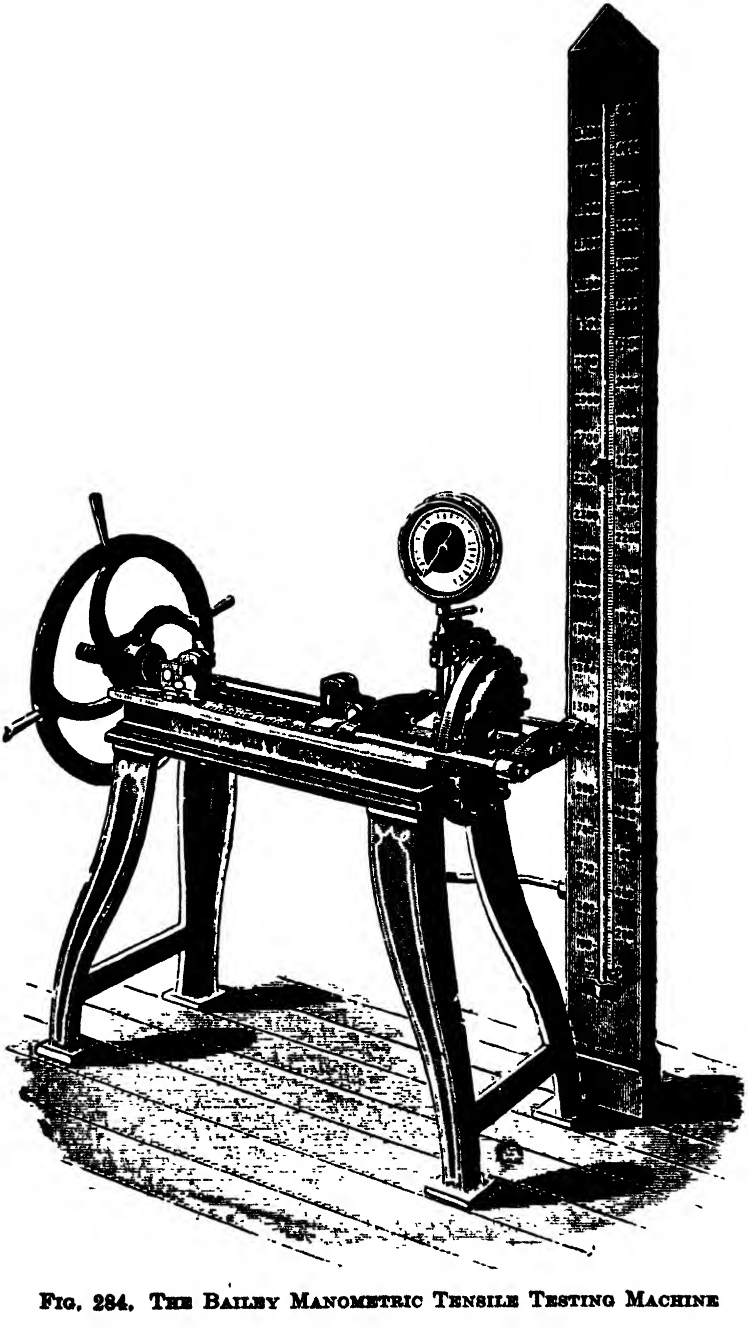

FIG. 284. THE BAILEY MANOMETRIC TENSILE TESTING MACHINE

Machines for Tests on Complete Specimens

It is now becoming increasingly important to carry out tests upon complete members of structures, more particularly in cases where the methods of calculation of stresses, deflections, and breaking loads are not altogether satisfactory. The designer is thus given reliable data based upon first-hand test information, and can allocate his factors of safety, dimensions, etc., accordingly.

For this type of test it is important to be able to observe the specimen under test all the time and to take readings or records of the loads and deflections. The machine must be made to accommodate fairly long specimens such as the girders, columns, struts, roof-truss members, beams, joists, and long tension members. It is an advantage to be able to carry out with equal facility tests in compression, tension, bending, and shear on the one machine.

Fig. 285 shows the 100 ton Avery-horizontal universal testing machine that appears to fulfil the above-mentioned requirements.

In this machine bending tests can be made upon large beams, or upon complete roof trusses; and compression tests can be carried out upon columns or struts of such length that the crippling loads can easily be estimated.

The machine is operated by hydraulic pressure derived from an accumulator supply. Alternatively, the machine can be rendered entirely self-contained by being connected up to a motor-driven variable capacity pump.

The load upon the specimen is communicated through the medium of a bell-crank lever to the steelyard, and there balanced off by means of a poise weight propelled by a hand wheel situated at a convenient position for the operator. In order to give finer readings for the lower loads, the poise weight is divided into one or more portions, each of which indicates against its own graduated scale. The capabilities of this design of machine for various capacities are given below.

This machine is made in three sizes, namely, 50, 100, and 300 tons. The former will accommodate specimens up to 10 ft. in length in tension or compression, 8 ft. span in bending, and 2 in. by 1 in. in shear. The latter will deal with members about 30 ft. long in tension or compression, 20 ft. in bending, and 10 in. by 4 in. in shear.

An Aeroplane Spar Testing Machine*

A special machine for full-scale development and routine tests upon built-up sheet metal and other designs of aeroplane spars,

* This machine was fully described in *Engineering*, 30th March, 1934.

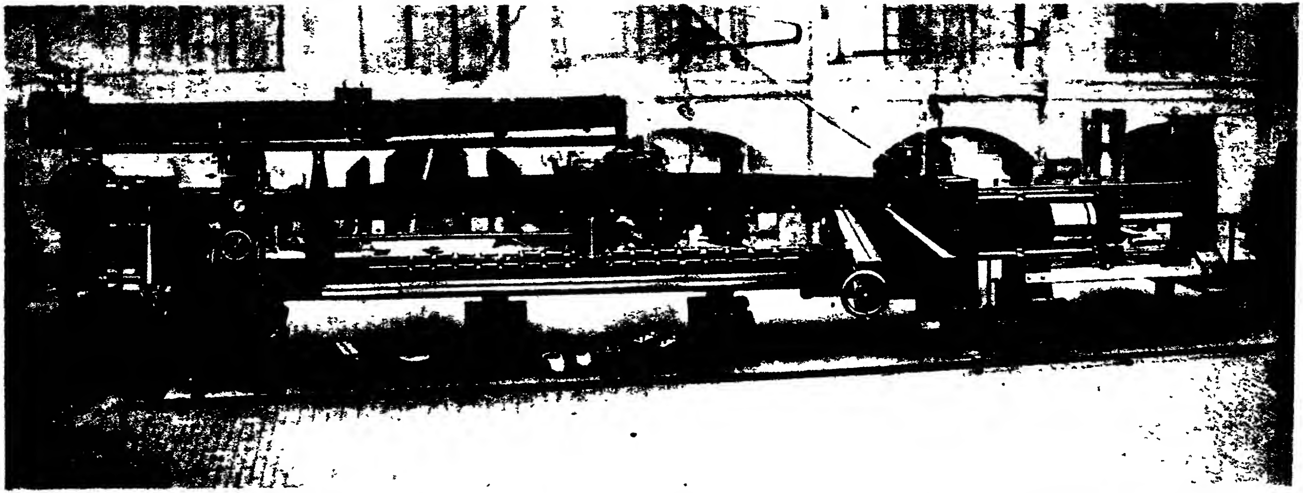

FIG. 285. THE AVERY 100-TON HORIZONTAL UNIVERSAL TESTING MACHINE USED FOR COMPLETE SPECIMEN TESTS

designed and built by Messrs. Vickers-Armstrongs, Ltd., in conjunction with the Royal Aircraft Establishment, is illustrated in Fig. 286.

The machine is arranged to test spars in tension, compression or lateral loading, and will accommodate specimens up to 25 ft. in length. Maximum compression and tension loads up to 100 tons and lateral loads up to 20 tons can be applied.

The end loads are applied by means of a hydraulic piston and cylinder *B* with adjustable crosshead *A*. A reversing valve on the hydraulic pump *C* determines whether the piston is moved in the tension or compression loading directions. The crosshead *A* can be moved along the bed of the machine by means of a hand-adjusting gear and fixed in any position. The pump is controlled by a hand wheel *G* to give any load up to 100 tons. The extension or contraction of the test structure is measured by the movement of the piston in its cylinder, using a magnification mechanism and dial indicator, graduated to read to thousandths of an inch.

The fixed crosshead *D* provides the housing for the load weighing apparatus. The load applied to the specimen is received on the shorter arm of a bell-crank lever, the longer arm of which is linked to a lever *K*. This lever has a fulcrum either at *L* or *M* according as the test is a compressive or tensile one, and is linked to a 2-ton Denison weigher *E* having a scale graduated to read up to 100 tons. The weight on the latter is first adjusted to the desired load and hydraulic pressure is then applied to the other end of the specimen until the steelyard just floats.

When the lever *K* is on the compression fulcrum *L* its unbalanced weight and that of the lever *J*, plus the weight of the connecting link *N*, all act in the same direction and can be balanced by applying a pull upwards through the link *P* to the end of the lever *K*. This pull is provided by the weigher *E*, which has a zero adjusting weight. If the link of lever *K* is on the tension fulcrum *M* an upward pull is applied to the lever *K*, as indicated at *Q*, the final balancing being effected by means of the zero adjusting weight on *E*.

Lateral loading is applied to the specimen by means of the carriage *F*, which can be moved along the bed to any desired position. A downward pull can be given to the specimen by means of a screw and worm wheel operating through shafting and bevel wheels from the hand wheel *H*. The downward pull is transmitted to the fixed head end of the specimen and is there measured by means of the links and lever *RST* and the weigher *U*. A special feature of the lever system used is that roller bearings are employed throughout instead of knife-edges. With these bearings no displacement of the lever system can occur during tests, whilst the frictional effect is a minimum.

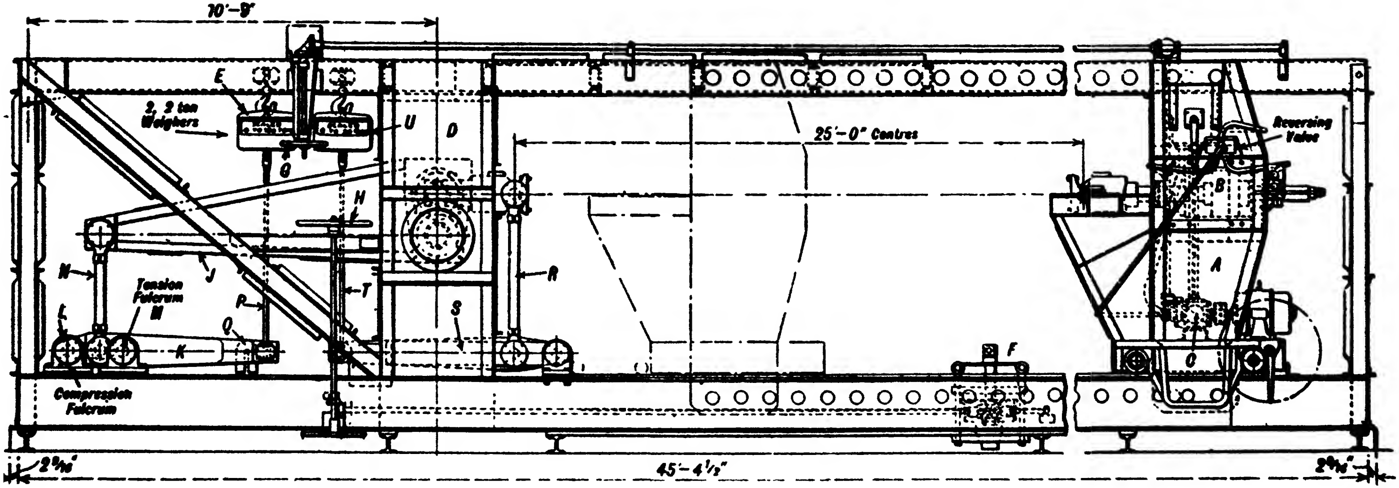

Fig. 286. A Machine for testing Complete Aeroplane Wing Spars, etc., (Vickers-Armstrong)

Calibrating Small Testing Machines

In order to check quickly the accuracy of testing machines it is necessary to apply loads at the test shackle positions and measure these values on the weighbridge or beam scale. Obviously it is not always possible to apply such heavy loads direct to the shackle, so that some method such as a calibrated strong spring or a system of levers is employed.

Fig. 287 shows the Olsen calibrating levers for vertical testing machines. The levers are placed in the machine, as shown, and as the leverage ratio is 10 to 1, the weights in the scale pans need only be one-tenth the poise weight scale values. Two levers are employed to obtain a balance on the weighing table, and thus to obviate any side-pull that otherwise would affect the accuracy of the calibration. These calibrating levers are made in different sizes for checking testing machines up to 100,000 lb. load capacity.

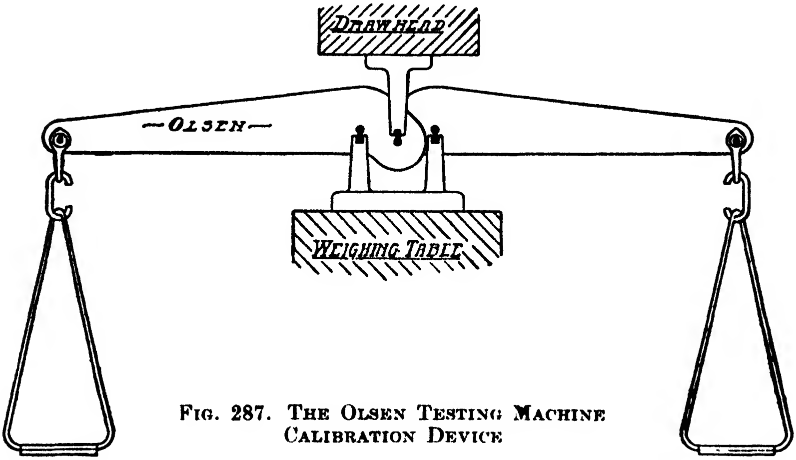

Fig. 287. The Olsen Testing Machine Calibration Device

Fig. 288 shows the Avery dead-weight calibration lever apparatus.

Calibrating Large Testing Machines

Whilst the loaded-magnification-lever method of calibrating testing machines, illustrated in Fig. 287, is well-suited to the requirements of small machines it is neither convenient nor satisfactory when applied to the larger types, and as any dead-weight method of checking the readings is ruled out on account of the considerable weight required —even with lever-magnification—some other means must be employed to ensure accuracy of calibration at all times.

One of the simplest and most convenient methods of effecting the checking or calibration of most designs of tensile and universal testing machines is that known as the *proving ring.*[*] This is an elastic heat-treated steel ring which is placed between the straining members of the machine to be calibrated and is loaded across a diameter, the deflection being measured by means of a micrometer screw. The ring has external bosses to which the loads are applied and internal bosses to which the micrometer screw and a vibrating reed deflection-measuring apparatus are attached. The deflection of such a ring bears a definite relationship to the applied load, and this is determined very accurately for each commercial ring by applying known loads in a dead-weight machine designed for this purpose.

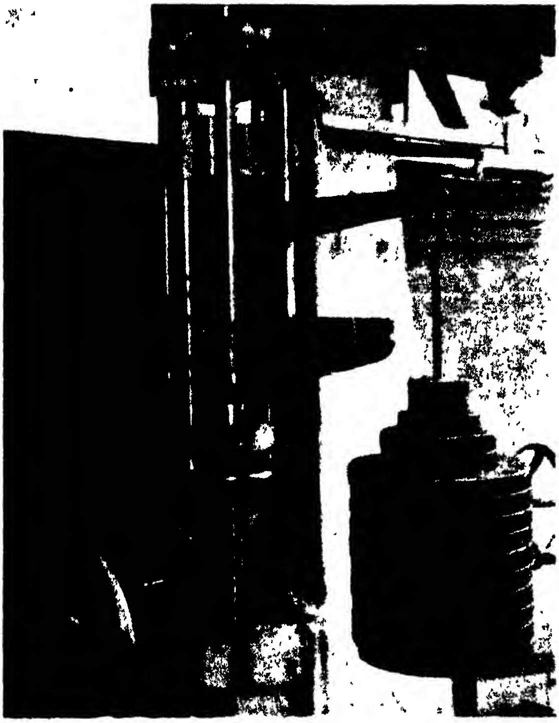

FIG. 288. THE AVERY CALIBRATING LEVER AND DEAD-WEIGHT APPARATUS

The ring (Fig. 289) is turned to size with the bosses integral, heat-treated, ground and polished. The manufacturing process employed ensures that the grain structure is uniform, with ideal elastic properties and low hysteresis characteristics.

---

[*] Devised by H. L. Whittemore and S. N. Petrenko (U.S. Patents, 1,648,375 and 1,927,478).

The *measuring device* consists of a precision-machined micrometer screw to which is attached a uniformly graduated dial. The reference index of the dial is graduated to take vernier readings.

The electrically-operated *vibrating reed* is mounted diametrically in the ring and is used as a contact between the ring and the micrometer.

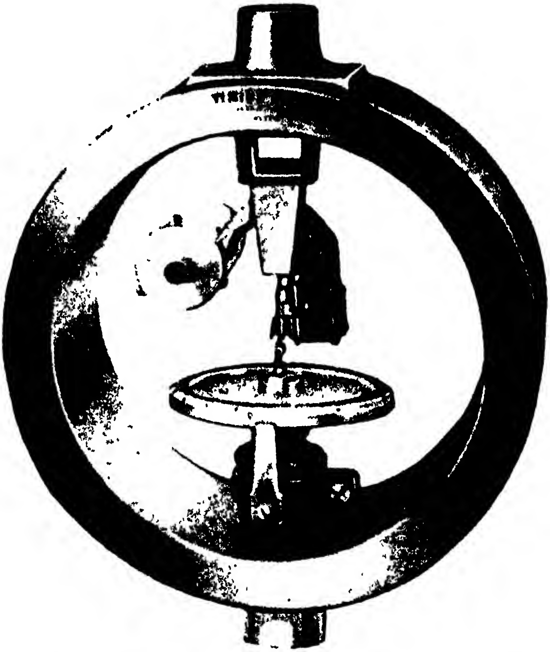

FIG. 289. THE COMPRESSION PROVING RING UNIT FOR CALIBRATING TESTING MACHINES

The tip of the vibrating reed and the uppermost point of the micrometer screw are hardened and highly polished in order to give maximum resistance to wear. The reed is vibrated, electrically, and it gives a certain tone or pitch which remains uniform until it is changed by the slightest contact between the reed and micrometer screw. The current is supplied by a small dry cell.

The proving rings can be used for both tension and compression loading. In the latter application the ring is placed between the upper and lower straining members as for a compression test, with the bosses on the loading axis, and the micrometer screw is lowered so that the vibrating ring will not be distorted. The ring is pre-loaded at least three times to the maximum load to be used in the calibration, in order to place the ring in its cyclic operating condition. The zero is noted before and after each of these load applications and a constant zero is thus established. With the reed in vibration the lowest calibrating load is applied and the reading of the ring and the testing machine load observed. The load is then removed, the zero reading checked and from the two readings the deflection of the ring is deduced. This deflection, for the actual ring used, multiplied by the ring calibration constant gives the actual load on the ring, and this value is then used to check the testing machine scale reading.

The proving rings supplied commercially have to conform to exact standards of stiffness and constancy under standard temperature conditions. They should only be used for increasing loads and within their rated capacities; the latter cover a wide range, namely, from 300 lb. to 300,000 lb.

Another calibration method based upon a similar principle to that of the proving ring, but with a different method of deflection indication is that known as the *tension loop dynamometer** (Fig. 290). It is, however, made in the smaller load capacities up to 5000 lb. and is employed in calibrating the small types of tensile and compressive testing machines.

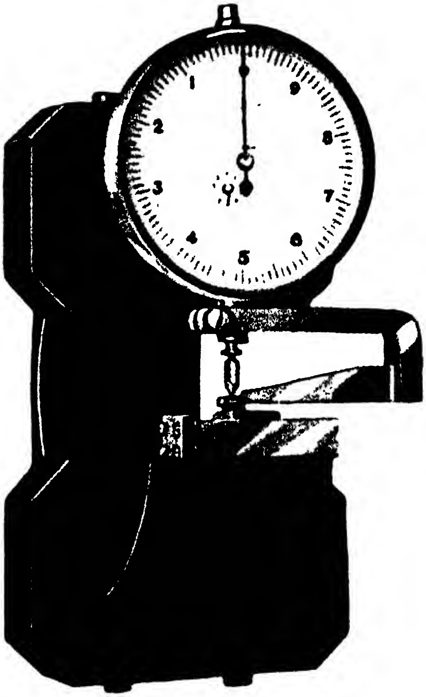

FIG. 290. THE OLSEN TENSION LOOP DYNAMOMETER

The elastic unit is an open loop of heat-treated steel of low hysteresis properties and the load is applied to the loop through tension bolts which screw into ball-mounted clevises, which ensure perfect alignment. The load is indicated by a 3½-in. dial gauge with an adjustable stem for convenient setting of the zero reading. A special feature of this calibration device is the employment of a differential lever for the purpose of correcting physical defects caused by the inherent design, material and manufacture of the loop so as to give a straight line calibration of load to deflection, within 0·25 per cent at maximum reading.

---

* Tinius Olsen Co., Philadelphia, U.S.A.

Dead-weight Testing Machines

In this type of machine the loads are applied to the specimen under test directly, i.e. without any lever or other load magnification system, but by means of dead weights. Such machines are used as standards for calibrating specimens such as proving rings and other elastic calibration devices employed for checking commercial type testing machines.

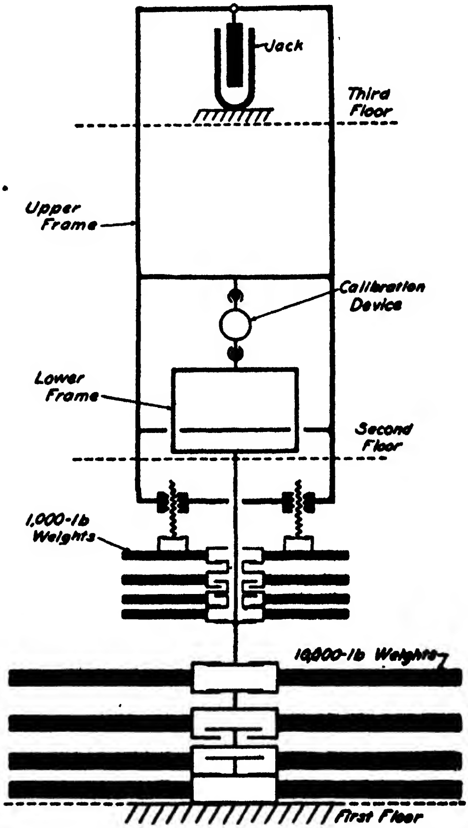

Fig. 291. Diagrammatic Illustration of 111,000 lb. Capacity Dead-weight Machine

Machines of 10,100 lb. (4·5 tons) and 111,000 lb. (49·5 tons) of this class are employed by the U.S. National Bureau of Standards* and are used in connection with the calibration of elastic calibration

---

* "Dead-weight Machines of 111,000 and 10,100-pound Capacities," Circular C.446, U.S. National Bureau of Standards.

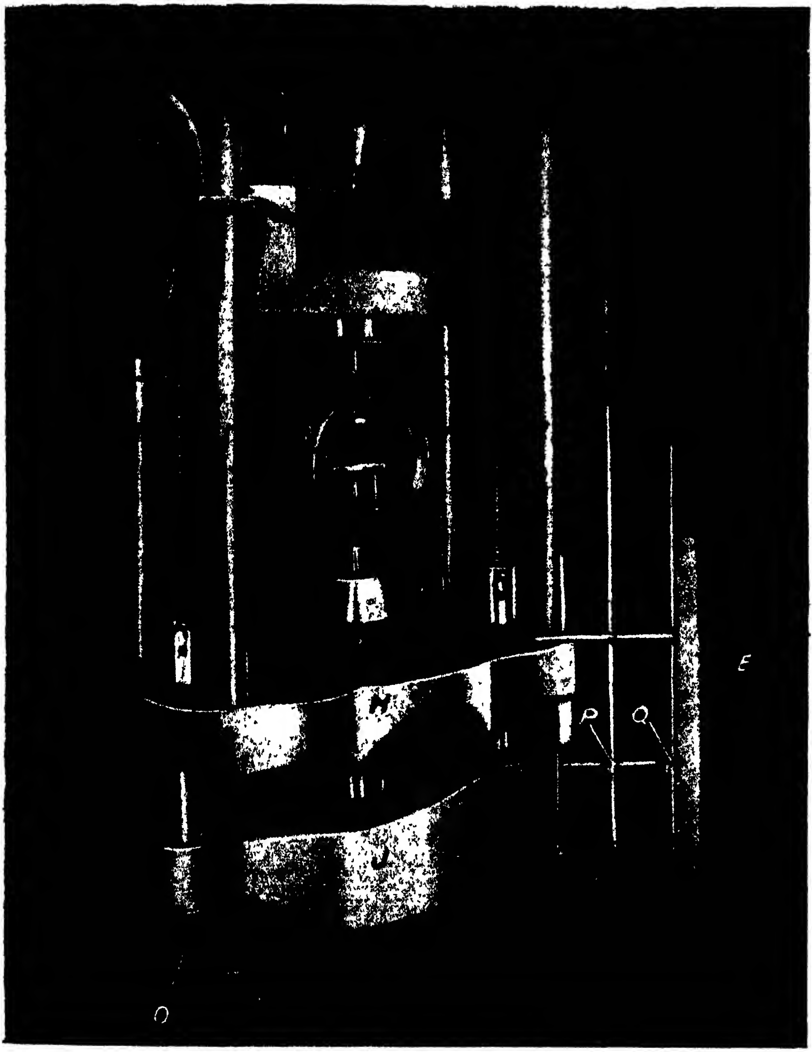

FIG. 292. LOWER PART OF 111,000 LB. CAPACITY DEAD-WEIGHT MACHINE

H = Upper frame yoke. *I* = Upper frame guide-rod. *J* = Lower frame yokes. *K* = Lower frame guide-rods. *E* = Cabinet for control valves and electrical switches. *O* = Bevel seat supports for lower frame when not in use. *P* and *Q* = Indicators for position of lower frame and number of weights supported by the loading bar. Total weight = Weight of lower frame (2000 lb.) + weights shown on *P* and *Q*.

devices recommended by the American Society for Testing Materials in their "Methods of Verification of Testing Machines." *

The principle employed for the larger machine is illustrated in Fig. 291. The machine consists essentially of a hydraulic jack, an upper and a lower frame, and flat cylindrical weights. The weights, not all of which are shown in the sketch, may be applied to the lower frame. The upper frame is supported by a ball that rests on the ram of the jack. The upper frame is connected to the lower frame only by the elastic calibration device. Loads are applied to the calibration device by raising the upper frame with the jack. The calibration device, being connected between the upper and lower frames, lifts the lower frame and the weights supported by it as the upper frame is raised. The number of 10,000-lb. weights applied to the lower frame depends on the height to which the frame is raised. The number of 1000-lb. weights applied to the lower frame is adjusted by means of motor-driven gearing attached to the upper frame.

The machine occupies three storeys of the test laboratory; it is 30 ft. high by about 12 ft. wide. The second storey room is maintained at a constant temperature of 70° F. to within ± 0·5° F. The hydraulic jack is operated by an electrically-driven multiple cylinder pump, and control valves and electrical switches are provided.

The cast-iron 10,000 lb. weights are about 7½ in. thick and 7 ft. diameter. The steel weights are 4 in. thick by 33½ in. diameter.

The apparatus for applying forces to the test specimen under calibration consists of the upper and lower frames, indicated in Fig. 292. The upper frame has four yokes connected by four vertical rods *I* which pass through guides in the second floor. The lower frame consists of two yokes connected by two vertical rods the upper parts of which pass through guides. Provision is made, in the design of the machine, to prevent damage should a calibrating device fail, by limiting stops which stop the weights from falling by more than a very small amount.

---

* Amer. Soc. Testing Materials Standards, 1889 (1942).

CHAPTER XII

TESTING MACHINE ACCESSORIES

Shackles and Grips

THE design of the shackles for holding specimens in tension, compression, and shear tests has an important influence upon the test results.

It is essential that the load shall be applied uniformly over the area of the specimen, and for the movement of the weighing system, the line of action of the load must always remain coincident with the axis of the specimen. The specimen itself should be so designed that it does not fracture in or near the shackle grips.

For commercial test work it is necessary for specimens to be quickly placed in the grips, and removed after testing, without the use of special tools or appliances.

It is usual in most testing machines to arrange for one of the crossheads (generally upon the load-application side of the specimen) to be adjustable, for accommodating specimens of different length; this is effected by means of a screwed portion or portions of the crosshead.

The shackles between the crosshead and specimen are often of the fork-hinged type, as shown in Fig. 293, to allow for self-alignment during loading.

Fig. 294 illustrates the type of grips frequently employed for making tensile tests upon standard shouldered test pieces.

Two typical methods of holding specimens are shown in Fig. 295. In the left-hand diagram the section of the specimen is enlarged where it enters the split spherical-seated collars shown, and a substantial head or shoulder is provided for taking the tensile load. The right-hand diagram shows an alternative method in which the enlarged screwed end of the specimen is held in a hardened spherical nut. It is desirable to employ rounded threads for this purpose to ensure ease of insertion and removal.

For certain plastic materials, such as mild steel and wrought iron, wedge grips, similar to those shown in Fig. 293, are employed. The angle of the wedges is from about 1 in 6 to 1 in 8.

The surfaces of the hard-steel wedges adjacent to the specimen are roughened, similar to those of a file, whilst the other three sides are finished smooth, so that the wedges readily slide down the shackle adapters; with this method the specimen is gripped progressively

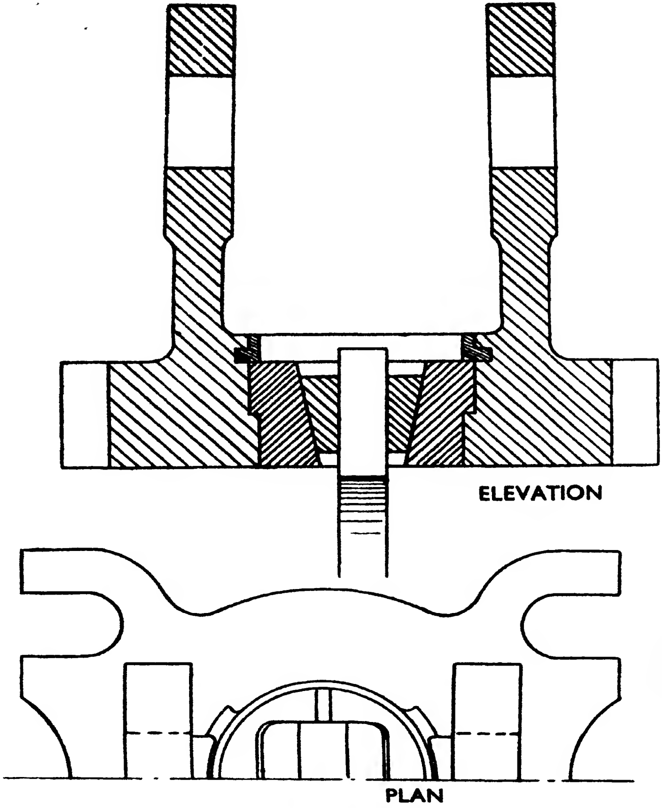

FIG. 293. TESTING MACHINE HINGED SHACKLES WITH WEDGE GRIPS

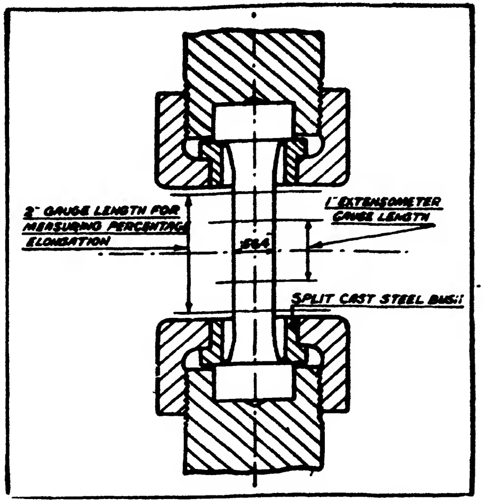

FIG. 294. GRIPS RECOMMENDED FOR MAKING TENSILE TESTS OF STANDARD TEST PIECES

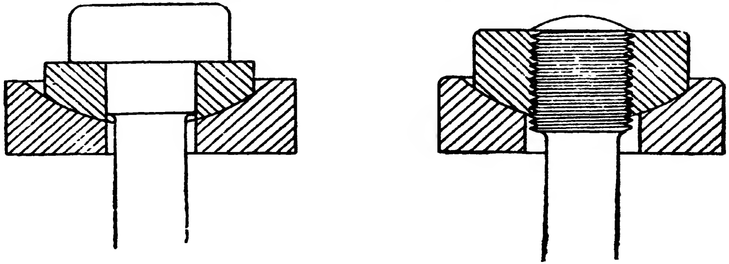

FIG. 295. SPHERICALLY-SEATED GRIPS

tighter as the load increases. In the example shown in Fig. 293 it will be seen from the half-plan view that the shackle adapter for the wedges is split, and is held in position by means of the bayonet-joint ring shown. The wedge method of gripping is employed in the case of flat strips of metal.

Fig. 296 shows the Riehlé patent wedge grips for self-alignment of the specimen, the wedge faces upon the roughened side being rounded so as to grip the specimen more in the centre than at the outsides. The round wedge faces are shown in both diagrams at *C*, *D* being the flat specimen.

Fig. 297 illustrates a convenient and inexpensive form of wedge grip for testing cast iron in tension. Here the specimens are made in the form shown in the diagram, being turned down to templet; the wedge dies, as seen in plan view, are split.

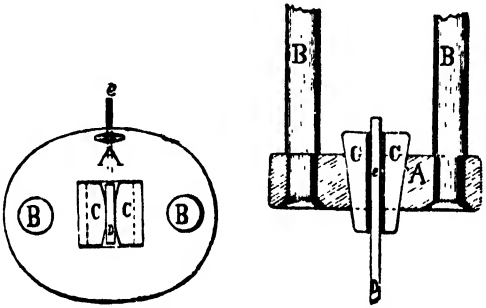

FIG. 296. THE RIEHLÉ WEDGE GRIPS

The wedge grips shown in Fig. 297 may be used for round or square tensile test pieces. In using these grips the crosshead holes should be lined up with liners depending in size upon the dimensions of the test piece, so that on applying the load the grips do not extend much beyond the faces of the crosshead. If the wedge grips happen to pull far below they are liable to fracture, whilst the crosshead holes will tend to spread. The specimen should be given as full a bearing on the wedge grips as possible.

Two more recent designs of self-adjusting grips for shouldered and screwed test pieces are shown on the left and right, respectively, in Fig. 299. These grips, in heat-treated alloy tool steel, are used on the Baldwin-Southwark testing machines.

Fig. 300 illustrates the Olsen suspended ball-bearing blocks used for compression tests on materials. It is of the type recommended by the American Society for Testing Materials. This compression block fits in the lower crosshead of the testing machine. It is provided with

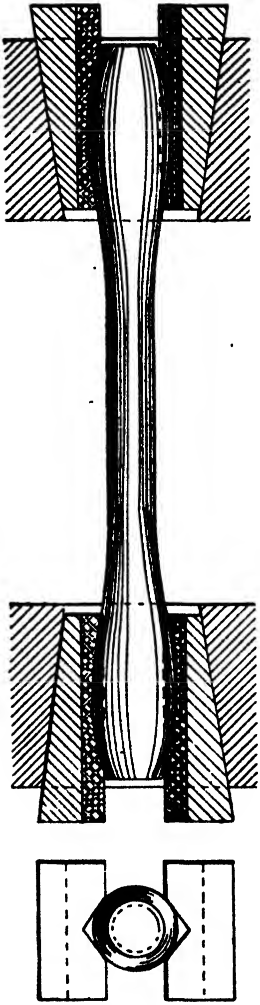

FIG. 297. THE OLSEN SELF-CENTRING SPECIMEN HOLDER

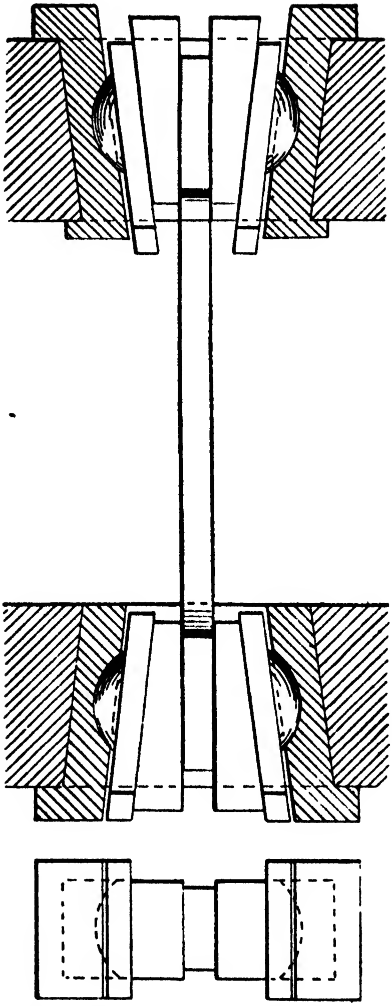

FIG. 298. THE OLSEN WEDGE GRIPS FOR FLAT METAL SPECIMENS

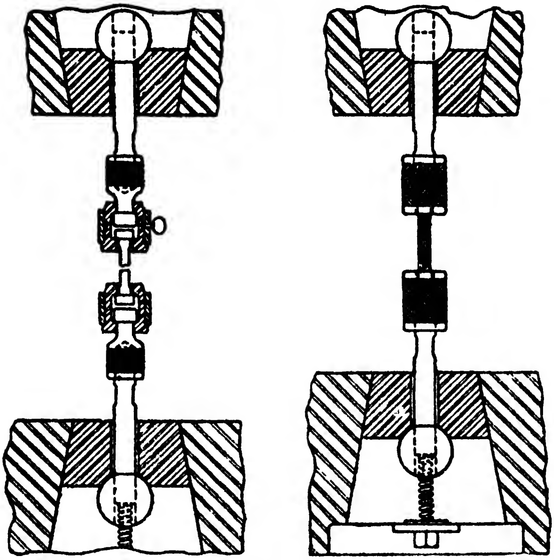

FIG. 299. TWO ALTERNATIVE TYPES OF SELF-ADJUSTING GRIPS (BALDWIN-SOUTHWARK)

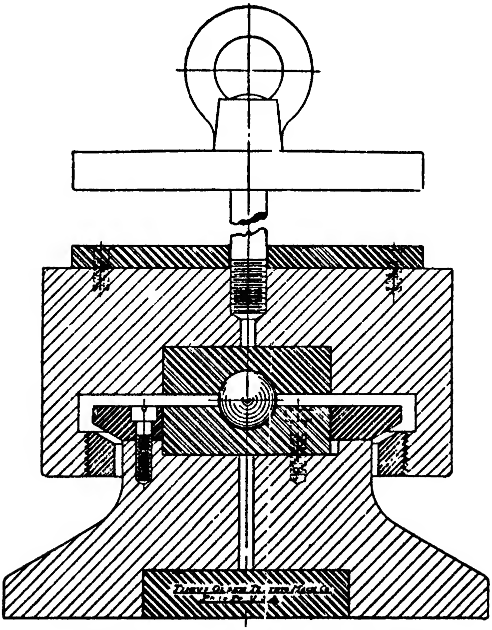

FIG. 300. THE OLSEN SUSPENDED BALL-BEARING BLOCK FOR COMPRESSION TESTS

a hardened and ground tool steel centre with inscribed circles for the purpose of centring the specimens. The standard size is adaptable to testing any specimen up to 6 in. cube, or 8 in. diameter.

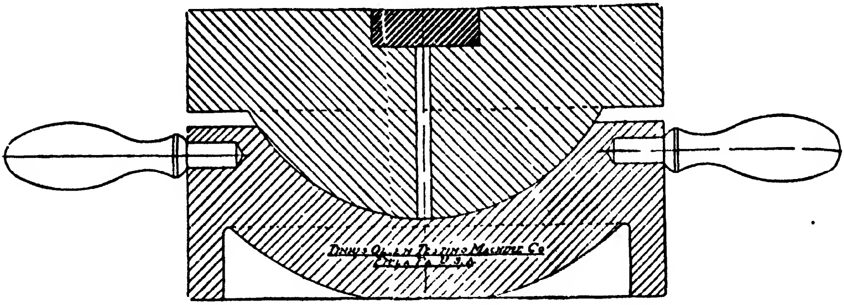

FIG. 301. COMPRESSION TEST BLOCK WITH SPHERICAL ADJUSTMENT, FOR USE ON THE TABLE OF A UNIVERSAL TESTING MACHINE

Notes on the Use of Wedge Grips

When using wedge grips of the Avery and similar patterns it is usual to coat the sliding faces with graphite grease before inserting them in their holders.

In locating the grips in the shackle holders it is desirable to arrange that at least two-thirds of the length of each pair of grips shall hold the test piece. If less than this length is used the wedges will tend to tilt as shown in the right-hand diagram of Fig. 302.

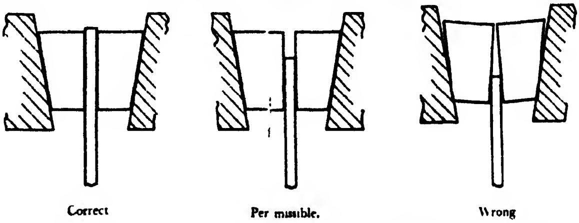

FIG. 302. ILLUSTRATING CORRECT USE OF WEDGE GRIPS

When smooth surfaced non-metallic materials, such as laminated Bakelite, hard rubber (ebonite), vulcanite and similar products, are tested in sheet form it is as well to place pieces of emery cloth between the gripping surfaces of the wedge grips and the material; the emery side of the cloth should be in contact with the sheet material.

After the specimen has been fractured in a tensile test, if the wedge grips are found to be tightly fixed in their holders a good plan for freeing them is to use a tube and plate as shown in Fig. 304.* The lower or

---

* Messrs. Avery, Ltd.

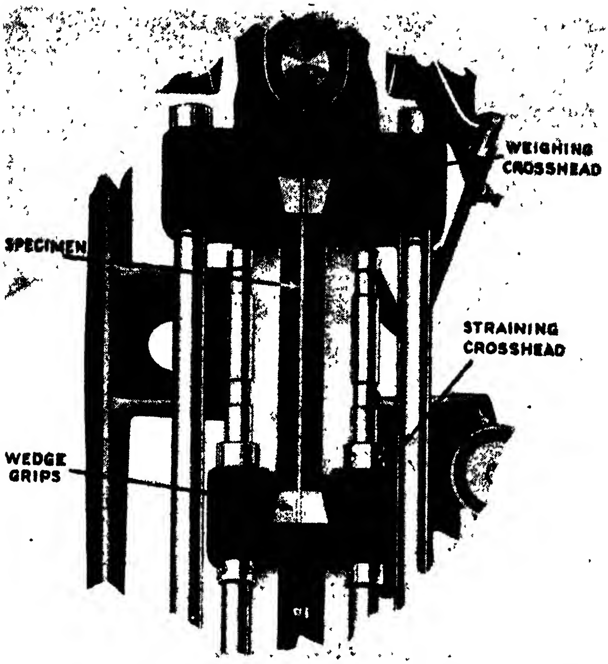

Fig. 303. Method of using Wedge Grips in Avery Testing Machines

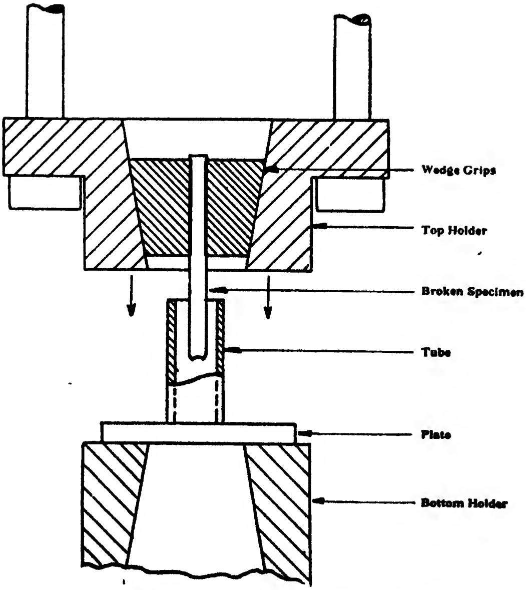

Fig. 304. Method of releasing Wedge Grips

ram member is moved upwards so that the upper end of the tube comes into contact with the wedge grips and releases them. It is not advisable to use a hammer and drift to free tight wedges as the latter and their holders may become damaged.

Pure Compression Difficulty

The designers and users of compression testing machines and accessories frequently ignore the fact that it is exceedingly difficult to obtain pure compression in ordinary testing machines.

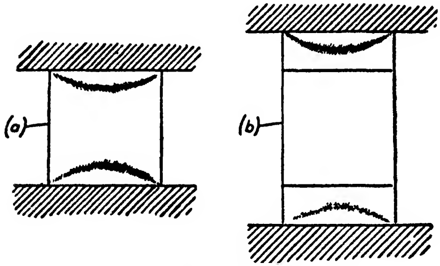

FIG. 305

It has been shown, from photo-elastic tests made on transparent materials, that if a compression member is loaded as shown at (*a*), Fig. 305, between parallel pressure plates, there is a region of stress at each end due to the difference in physical properties of the two materials in contact, and partly to the dimensions of the surfaces, so that the central part only is in compression. If, however, the block is loaded between plates of the same material and cross-section, as shown at (*b*), Fig. 305, the uneven stresses then occur only in the end plates, the central block being in pure compression.

In practice it is not an easy matter to keep these pressure plates parallel; a good example of a satisfactory solution of this difficulty is that of the Emery testing machine.

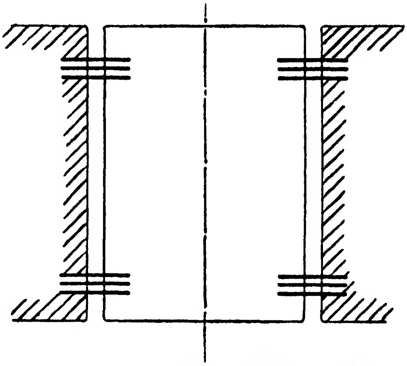

FIG. 306. COKER'S METHOD OF MAKING COMPRESSION TESTS

Fig. 306 illustrates a method employed by Professor Coker, in which thin concentric diaphragm plates are used for guiding the central loading plate whilst allowing small axial adjustments.

SHEARING TESTS

For making shearing tests it is an easy matter to devise a suitable shackle upon the forked-end and eye-plate principle (Fig. 307), with the specimen to form the connecting pin. The specimen is in double shear in this case, and in order to approximate to a pure-shearing action the specimen should be in the form of a bolt, with a clamping nut to hold the sides of the forked shackle to the eye-plate shackle, and thus to minimize bending action. The shearing edges of the shackle holes should be hardened; replaceable hardened bushes are found convenient in this respect.

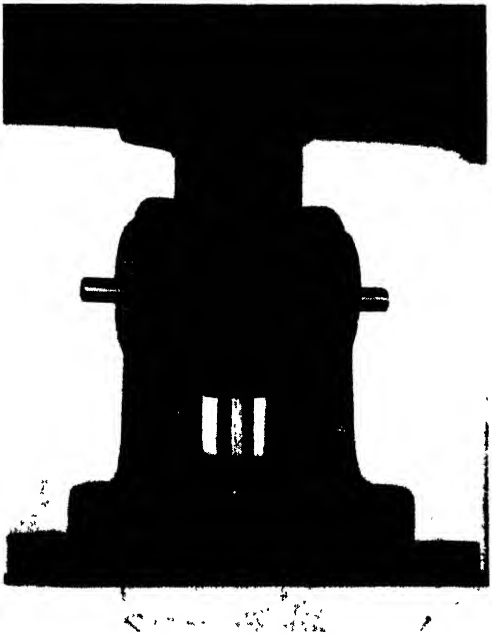

FIG. 307. METHOD USED FOR MAKING DOUBLE SHEAR TESTS IN AVERY MACHINES

Fig. 308 illustrates the Izod* shearing shackle for flat bar specimens. In the diagram *ss* is the specimen, which is held rigidly to the frame *a* by means of plates *gg*; the latter are bolted down on to the specimen. The frame *a* forms one member of the shackle and is provided with hardened-steel shearing plates *b*, whilst the cast iron sliding block *d*, carrying the hardened-steel shearing plate *e*, forms the other member.

A convenient form of shearing tool, suitable for making double-shear tests upon 1 in. diameter bars, is that shown in Fig. 309. The block which carries the "knives" and specimen rests on the table of the testing machine, and the movable head carrying a crushing tool forces the upper knife through the specimen. The lower cast iron block is provided with a V-groove in which the specimen rests. The two

---

* *Proc. Inst. of Mech. Engineers*, 1905.

lower knives are exactly 1 in. apart, and are held in the block with a wedge by which they are brought into the correct position. The upper knife is movable, and is guided by the block; this knife is 1 in. wide, so that it just fills the space between the lower knives when it is moved downwards.

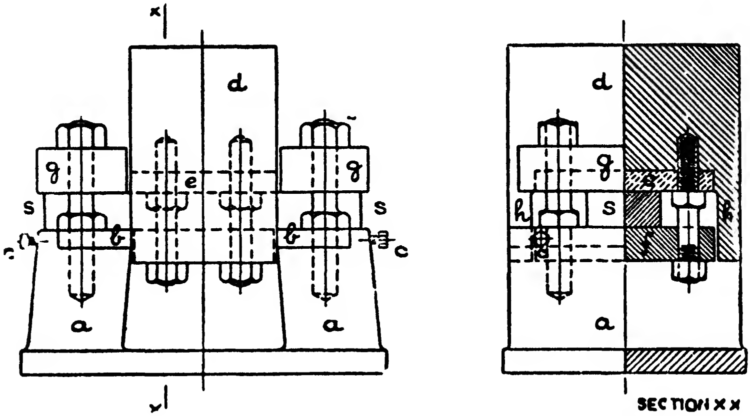

Fig. 308. Izod's Shearing Shackle

Cable Grips

Fig. 310 illustrates a convenient form of grip for holding steel cable. The cable end is passed through a hollow conical thimble, and the loose wires are individually separated and bent back in various directions; the interior of the thimble is then filled with a strong kind of soft solder or alloy.* The conical thimble then tends to wedge itself in the dies of the shackles during a test.

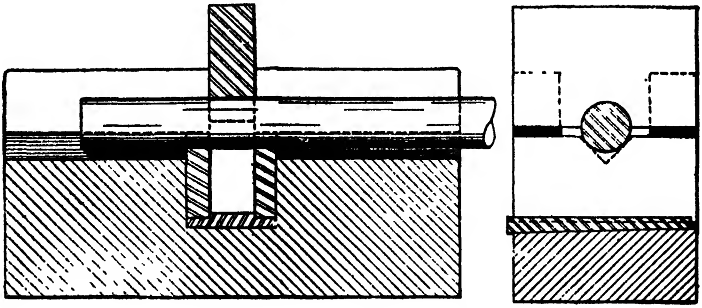

Fig. 309. Double Shear Test Tool

It is often customary to form a good splice at each end of the

---

* A suitable alloy consists of lead 9 parts, antimony 1 part, and bismuth 1 part.

length of cable to be tested, and to bind with copper wire the spliced portion, finally soldering the whole splice. Ordinary pin-shackles can then be employed for holding the cable.

Fabric Grips

Fig. 311 shows a suitable shackle for holding fabric, belting, and similar materials; this design of shackle has been employed upon the Avery fabric testing machine. The shackle consists of two portions *A* and *B*, hinged about the main link pin *C*, the hinging being for rapid insertions of specimens. The material is gripped between the corresponding corrugated portions of *A* and *B* by means of the bolts *D*, and no slipping is found to occur during a test.

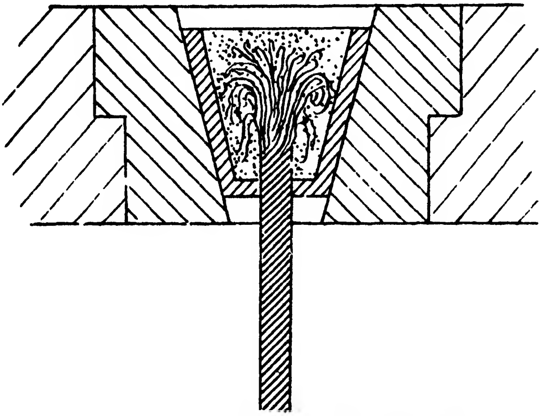

FIG. 310. GRIP FOR TESTING STEEL CABLES

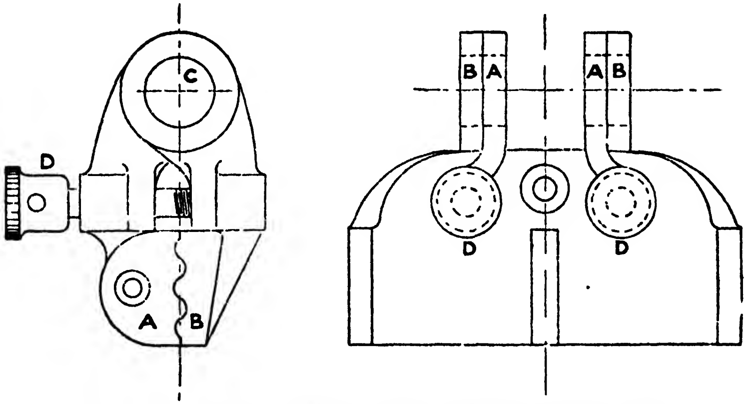

FIG. 311. AVERY'S FABRIC TESTING MACHINE SHACKLES

Autographic Stress-strain Recording Apparatus

Most modern testing machines are provided with devices for recording automatically the loads and extensions of the specimens throughout a test.

The principle upon which the more common types of autographic apparatus work is as follows: A cylindrical drum, upon which a sheet of paper is fastened, is caused to rotate about its axis by means of a piece of fine wire or strong cord passing around a suitable concentric pulley. The other end of the wire or cord is attached through a pulley system to the specimen, or crosshead of the testing machine, so that the rotation of the drum is proportional to the extension of the specimen. It is usual to fasten two clips to the specimen at 2 in., 4 in., 6 in., or 8 in. apart, as the case may be, and to arrange for the wire or cord to pass over pulleys on the clips, with suitable movement magnification mechanism, in such a manner that the rotation of the drum is proportional to the extension occurring between the clips.

The stress component of the curve drawn upon the drum is obtained by means of a pencil carriage which is moved in a direction parallel to the axis of the drum, and which derives its motion, through a suitable reduction, from that of the rotation of the screw or the motion of the travelling crosshead (the position of which along the beam scale is proportional to the load upon the specimen).

Fig. 312 illustrates the Wicksteed-Buckton autographic recorder employed upon single lever machines. The rotation of the drum is obtained in a similar manner to that outlined above. The load is measured by setting the beam initially in its extreme position, by running the jockey weight along to the maximum scale reading, and by interposing a compression spring between the beam end and its lower stop. This spring is initially compressed by the jockey weight; as the load comes on the specimen, the beam slowly rises, and the compression spring, becoming relieved of part of its load, extends. The amount of the extension is proportional to the load upon the specimen, and by coupling up the pencil carriage with the spring, the pencil will be caused to travel vertically upwards by amounts depending upon the load, and, combined with the rotational motion of the drum, a load-strain diagram will be drawn.

In some forms of autographic recording apparatus it is arranged to record automatically the time of the test by means of a chronograph-operated sparking set or inked pen. Electrical methods are sometimes employed for recording small strains within the elastic limit.

An early load-recording device consisted of a pencil worked from a small hydraulic cylinder's piston, the motion of the pencil being

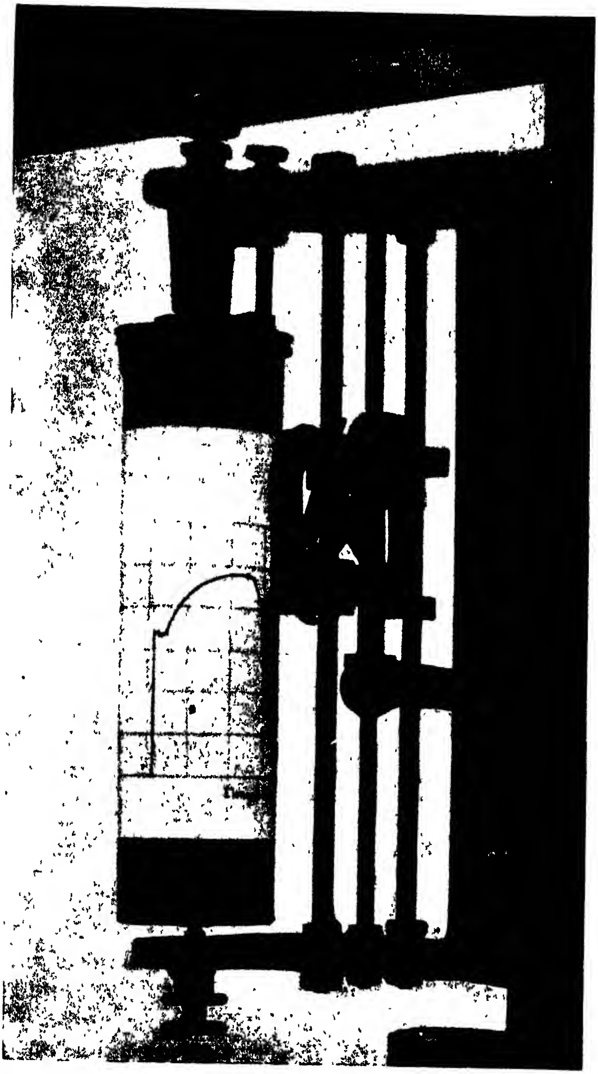

FIG. 312. AUTOGRAPHIC APPARATUS ON TESTING MACHINE

proportional to the pressure in the ram cylinder. Owing to uncertainty of ram friction, this method has not been adopted.

Two alternative types of autographic recorder are available for the Avery-Buckton single lever testing machines, namely, the *spring-loaded* and the *geared* ones shown in Figs. 313 and 314 respectively.

In the former model the recorder is of the drum pattern and is mounted on a bracket attached to the main standard of the machine. It is arranged so that the vertical ordinate on the graph represents the load, and the horizontal ordinate the elongation of the test piece. The recording pencil is moved in a vertical direction on guide rods by means of a steel tape passing round pulleys and in connection with calibrated springs at the end of the steelyard. The drum that carries the chart is revolved by a tape passing round suitably arranged pulleys and in connection with the top and bottom tension holders.

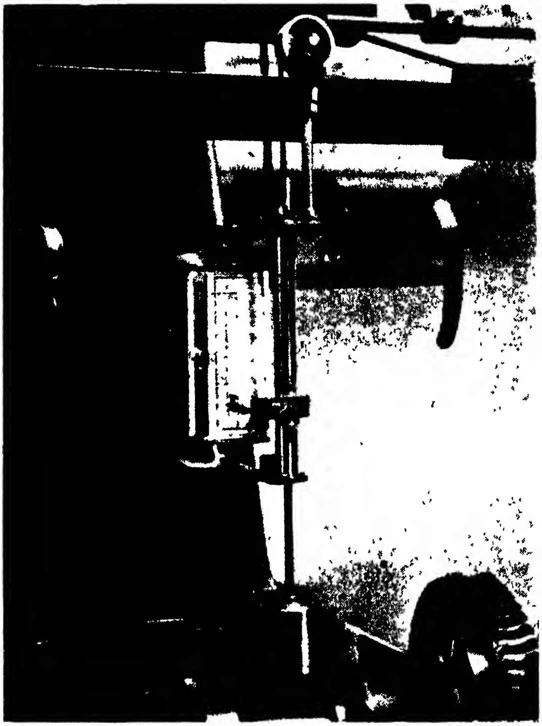

FIG. 313. THE AVERY SPRING-LOADED AUTOGRAPHIC STRESS-STRAIN RECORDER

In the case of the geared type recorder (Fig. 314), which is also of the drum pattern, this is attached to the bracket carrying the poise-propelling hand wheel. It is arranged so that the horizontal ordinate on the graph paper represents the extension of the specimen whilst the vertical ordinate represents the load. The recording pencil is traversed along the drum through spur and screw gearing, by the poise hand wheel, whilst the drum is revolved by means of a cord passing round suitably arranged pulleys and attached to the straining holder.

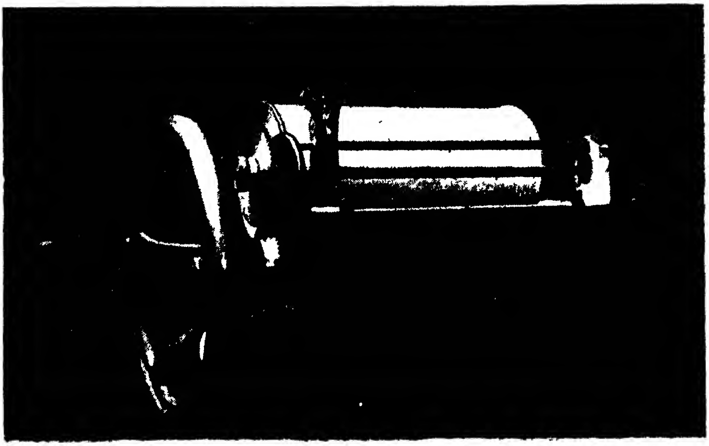

FIG. 314. THE GEARED TYPE STRESS-STRAIN RECORDER

Extensometers

The strains within the elastic limit are so small that special apparatus must be employed to measure them. In the case of a 2-in. specimen of mild steel the total amount of elastic strain up to the elastic limit is only about $\frac{1}{500}$ in., or about $\frac{1}{6400}$ in. per ton per sq. in. load, so that a device embodying some magnification system of levers or mirrors becomes necessary.

Extensometers should be capable of measuring strains up to $\frac{1}{50000}$ in., in order that the stress-strain relation may accurately be obtained, and for estimating the value of moduli of elasticity.

It is also essential that the mean strains of the two opposite sides of the bar or specimen should be measured, as one side may, and often does, stretch more than the other, owing to slight bending or stress inequality.

The rate of loading also has an influence upon the strain measurement, and a certain time interval (usually of several seconds) should be allowed to elapse before an extensometer reading is taken.

Extensometers for commercial use should be self-contained—that is to say, when not in use should not consist of a number of loose and delicate parts; they must be easily affixed and detached, sufficiently strong in design, and reliable in use over long periods with a minimum of attention. It is usual to supply gauges with an extensometer, provided with suitable punches or indenting screws; the gauge is placed upon the specimen, and the specimen is punched or marked at the gauge distances, say, of 2 in. or 8 in., the extensometer clamping screws being placed on the marks.

Dial Extensometers

In view of the unsuitability of many of the existing laboratory and research types of extensometer for commercial testing work, special types have been designed in which the magnified extensions of the specimen are transferred to the gauge member of a dial type of fine measuring instrument as used in engineering workshops. This enables direct readings to be obtained in a convenient manner.

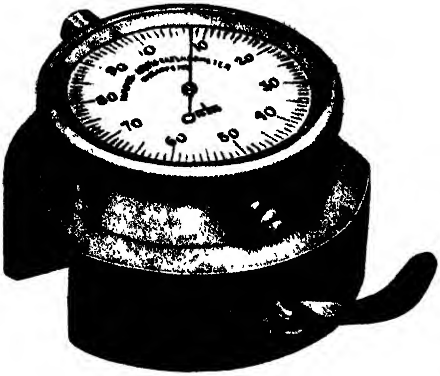

Fig. 315. The Hayes-Lewis Dial Type Extensometer

Fig. 315 shows the Hayes-Lewis extensometer of this type, as used by the U.S. Government, for 0·505 in. to 0·564 in. diameter specimens. The instrument is simply clamped on to the specimen by means of the thumb lever shown—an operation that takes only a few seconds.

It reads deformations within the elastic limit accurately to one ten-thousandth of an inch; it can readily be adjusted to zero. The instrument, which is light and compact, has a 2 in. dial.

Single Screw Extensometer

A neat type of extensometer is the Olsen single screw micrometer shown in Fig. 316. This is arranged with an equalizing lever, mounted on the lower frame in such a manner that the one micrometer screw measures the average extension of the two sides of the specimen.

This instrument reads to one ten-thousandth of an inch for a length of ½ in., and thus is only suitable for use within the elastic limit or yield point. It is adapted for round specimens up to 1¼ in. diameter.

Spacing bars and contact points may be obtained for testing gauge lengths of from 2 in. to 8 in.

This instrument may be obtained either with the three-point contact in each head, as shown, or with a two-point contact, one on each side of the specimen.

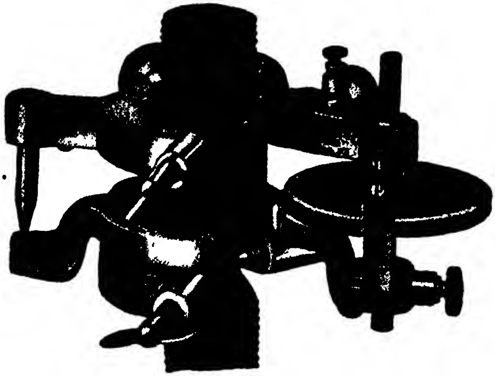

FIG. 316. THE OLSEN SINGLE SCREW EXTENSOMETER

The Lindley Extensometer

This compact dial-type instrument,* which is shown in horizontal view in Fig. 317, but is used in the vertical position on vertical type tensile testing machines, is based on the principle of a lever magnification of 2: 1 in conjunction with a dial indicator calibrated to read to $\frac{1}{10000}$ in. The extensometer is always in static balance about the axis of the test piece, so that no errors are introduced due to the weight of the instrument bending the test specimen. Minute distortions inevitably set up in the extensometer whilst gripping and testing sheet and strip materials do not, in this case, affect the dial reading, while frictional lag effects have been almost entirely eliminated.

Referring to Fig. 317, the extensometer consists of a body *A* having a rigid arm *B*. To the upper end of the column is hinged a similar arm *C*. The hinge consists of a wide strip of spring steel, which allows the arm to move in a vertical plane whilst preventing any sideways or rotational movement. The specimen under test is gripped between the ends of the screws *E*. These are operated by means of thumb wheels *F* through gears (housed in casings *G*) in such a manner that the vertical axis of the specimen, whatever the thickness of the latter, is always coincident with the central plane of the extensometer.

To the upper arm of the extensometer is secured a spring steel

---

* Messrs. J. E. Baty & Co., Ltd., London.

lever *H* which passes down the front of the body and carries a cone-shaped button. Pressure on the lever forces the cone into a hole at the base of the column, so arranged that when this is done the distance between the axes of gripping screws is 2 in.

The outer end of each arm is provided with a hardened steel bush recessed to take one of the ball ends with which the special Mercer dial gauge is fitted. The ends are retained in the sockets by means of forked springs which prevent "end-play" but permit the dial to be rotated into any convenient position for observation. In the event of the test piece elongating unduly or breaking, the dial is released without damage and although the spring hinge may be strained, this is easily removed for correction or replacement.

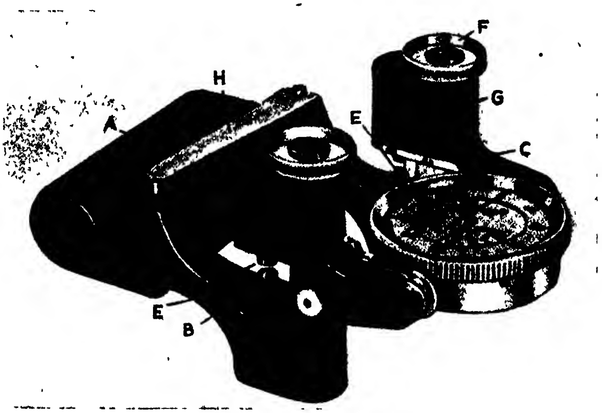

FIG. 317. THE LINDLEY DIAL-TYPE EXTENSOMETER

The test piece upon which this instrument is used should have a parallel length of at least 2¼ in. and not be thicker than 0·625 in. or wider than 0·75 in. The maximum extension that the extensometer is capable of is 0·1 in. on the specimen.

The Hounsfield Extensometer

This instrument is of robust design and has been constructed for commercial test purposes. It can be used for specimens up to 1·125 in. diameter and strip 1 in. wide or less. It will give elongation measurements with an accuracy of 0·00001 in., if the smaller divisions are estimated, by eye, to one-tenths.

Referring to Fig. 318, the essential members are a clamping frame (1) to which a bell crank lever clamp (2) is pivotally connected. These two clamps can be attached to a bar, the extension of which is required, in the ordinary way. The arms of the bell crank lever are approximately* 1 in. and 2 in. in length, so that a 50 T.P.I. micrometer screw, which measures the movement of the longer lever, behaves like a 100 T.P.I. micrometer screw acting on the shorter lever, i.e. one revolution of the graduated wheel represents one hundredth of an inch, and as this is divided into a hundred parts each division represents 0·0001 in.

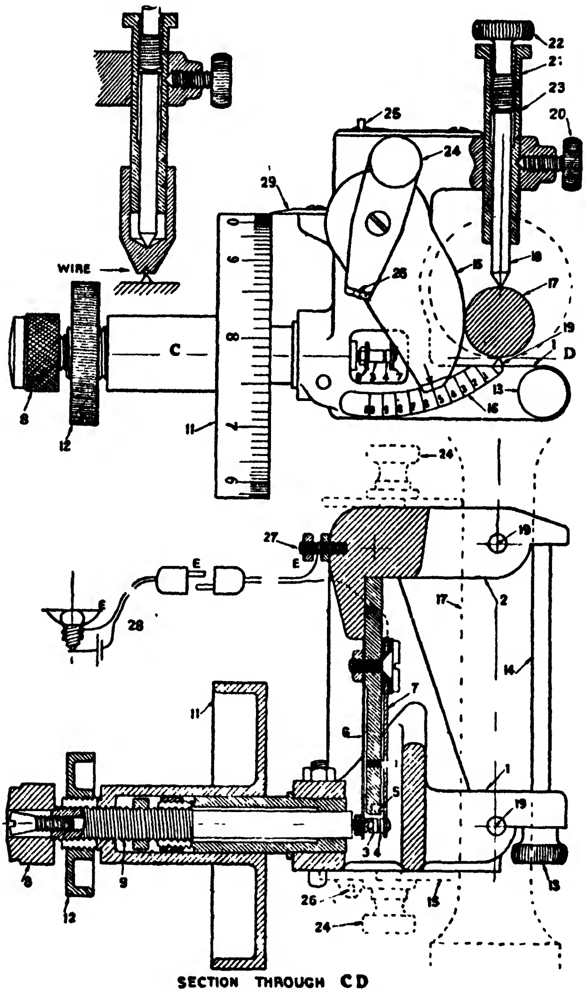

FIG. 318. THE HOUNSFIELD EXTENSOMETER

---

* Actually the micrometer thread is 0·5 mm. pitch, and the longer lever is 1·9685 in. long, which gives the required ratio.

In terms of stress, each division represents 1500 lb. (or 0·67 tons) per sq. in. for a material having a modulus of elasticity of 30,000,000 lb., and each division can be subdivided by eye into tenths representing 150 lb. stress. Accurate measurement is obtained by electrical contacts (3) and (4), which form a switch in a battery-lamp circuit (28). The platinum contact (4) is mounted on an insulated spring (7) which presses firmly against an insulated stop (5). The contact (3) is mounted on an earthed spring (6) which presses lightly on the micrometer spindle.

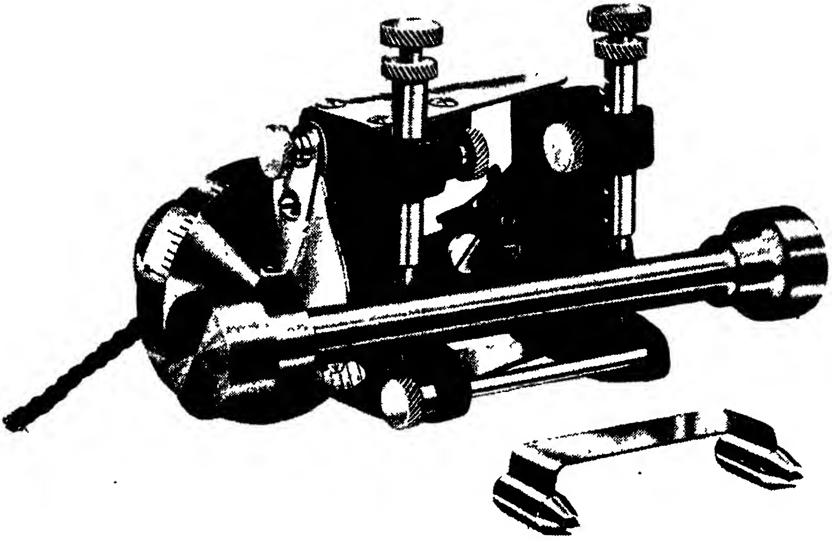

FIG. 319. THE HOUNSFIELD EXTENSOMETER

The outer knurled head (8) turns the micrometer spindle (9), and the graduated wheel (11) is connected to it by friction. The friction can be varied if really necessary by moving the larger knurled nut (12). When the stop screw (13) is "home" in clamp (1) and the end of the stem (14) is touching the clamp (2) the points nipping the test bar are 2 in. apart. Plates (15) on each clamp move over an accurate scale (16) graduated in tenths of an inch; these can be set to suit the diameter of the test bar before the instrument is mounted on it, so that the points on each clamp act on a diameter of the bar. In the drawing these are set to suit a ½ in. bar (17). The design of the instrument presumes that the bar is straight and remains so under stress, and all the forces act in the plane *CD*, which means that slackness or side play in the adjustable points (18) is immaterial.

The extensometer weighs 9½ oz.

The Olsen Adjustable Extensometer

This instrument, which is made in several models for different test specimens, belongs to the magnifying lever and dial gauge type. It is designed for quick and convenient attachment to the specimen. Thus, it is held in one hand and snapped into place or released by means of the trigger shown on the lower central part of the illustration (Fig. 320) just above the screwed portion of the specimen. Knife-edges bear against opposite sides of the latter at the correct gauge length. The dial gauge, which is graduated to 0·0001 in., is set to zero by means of its bezel ring. The trigger, mentioned previously, is arranged to actuate a cam which brings the fourth knife-edge gently on to the specimen after the instrument has been clamped on to the specimen, thus preventing any possible initial error and damage to the instrument due to shock. The clamps provided are adjustable to take specimens from $\frac{1}{16}$ in. diameter wire up to 0·505 in. test bars.

One model is fitted with the Warner attachment (Fig. 321) for accurate readings of the elongation of thin sheet metal. Here, the specimen is backed by flat plates moving on auxiliary knife-edges; the backing plate is of the floating type so that specimens of only a few thousandths of an inch thickness can be tested with precision.

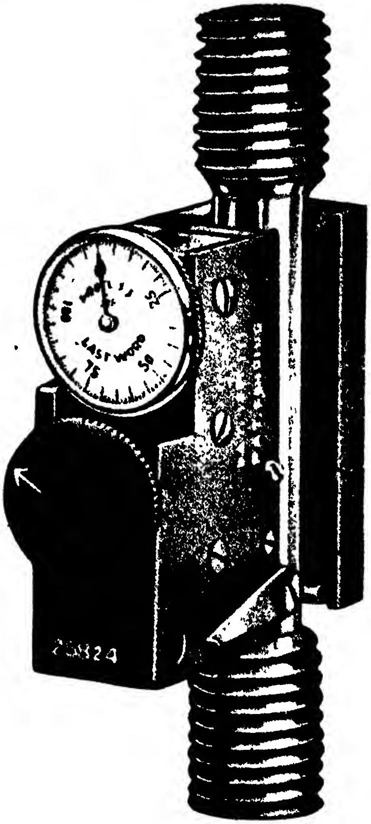

FIG. 320. THE OLSEN ADJUSTABLE EXTENSOMETER, IN POSITION ON TENSILE TEST SPECIMEN

Electronic High Magnification Recorder

A precision apparatus, in commercial form, produced by the firm of Tinius Olsen enables stress-strain records to be drawn on charts of relatively large dimensions, the diagrams being made automatically as the test proceeds. It utilizes an electrical principle and requires three different units, namely, (1) the extensometer, attached to the specimen; (2) an electronic amplifier; and (3) the recording unit.

The extensometer contains a magnet coil having an air gap between two iron cores. In the recorder there is a similar coil and air gap. The two coils with their air gaps constitute an automatically-balanced electrical circuit. The air gap in the extensometer is actuated by the elongation of the specimen, whilst the air gap in the recorder is actuated by means of a micrometer screw which is rotated by the same electric motor that drives the recorder drum.

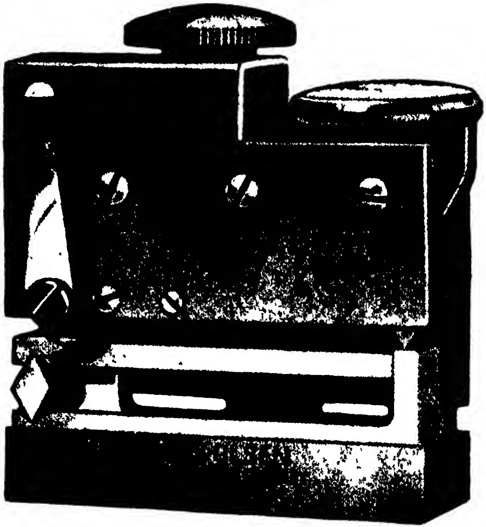

FIG. 321. ADJUSTABLE EXTENSOMETER WITH WARNER ATTACHMENT FOR THIN SHEET METAL

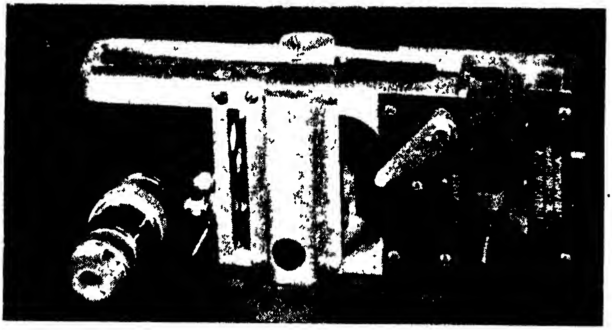

FIG. 322. THE OLSEN ELECTRONIC RECORDER EXTENSOMETER (ADJUSTABLE TYPE)

When the load is applied the specimen stretches and this causes a change in the air gap within the extensometer. This, in turn, changes the electrical characteristics of the magnetic unit in the extensometer and thereby creates an unbalance in the electrical circuit. It is so arranged that this unbalance produces a voltage effect which is amplified and applied to the electric motor of the recorder. The motor then operates and rotates the micrometer screw, which opens the air gap in the recorder's air gap by a distance exactly equal to that caused by the specimen elongation so that the circuit is again in balance and the voltage drops to zero. Every detail of the elongation is recorded on the rotating chart as the test progresses, and the result is a much magnified stress-strain diagram on prepared graph paper showing in detail every change and enabling various measurements and data to be obtained, including proof stress values.

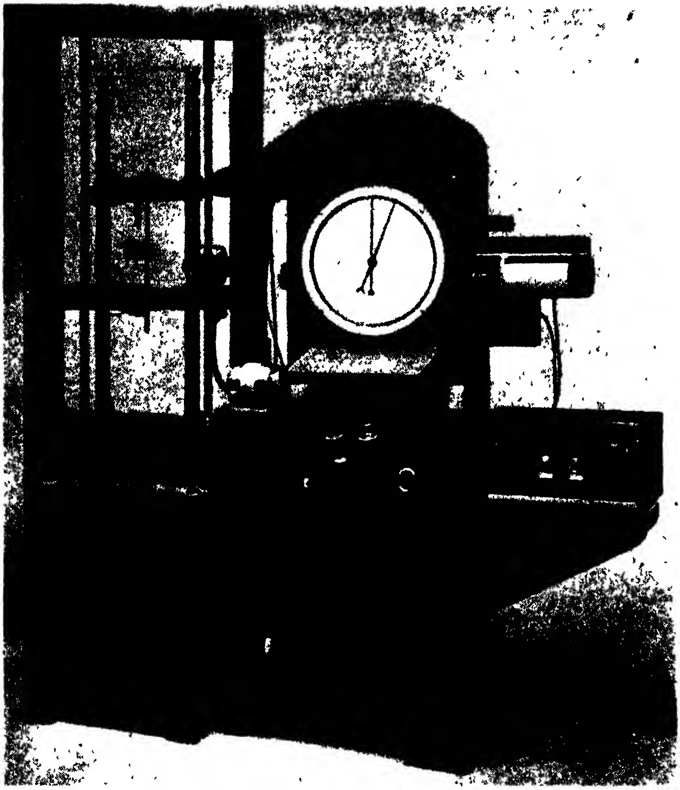

FIG. 323. THE OLSEN 20,000 LB. HYDRAULIC TESTING MACHINE WITH ELECTRONIC HIGH MAGNIFICATION RECORDER IN POSITION

A Mirror Extensometer

An interesting instrument for measuring the extensions or contractions of specimens in tension or compression is that used by

Robertson and Newport,* and illustrated diagrammatically in Fig. 324. It consists of two members clamped to the specimen under test, one being free to pivot about the clamping centre and the system of mirrors shown. The two lower mirrors enable a reflected image of a scale, 13 ft. away, to be seen in a telescope sighted on them. The upper mirror tilts relatively to the lower one, proportionately to the strain.

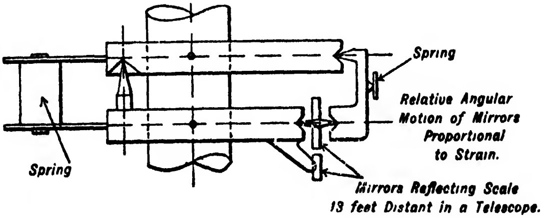

FIG. 324. THE ROBERTSON AND NEWPORT MIRROR EXTENSOMETER

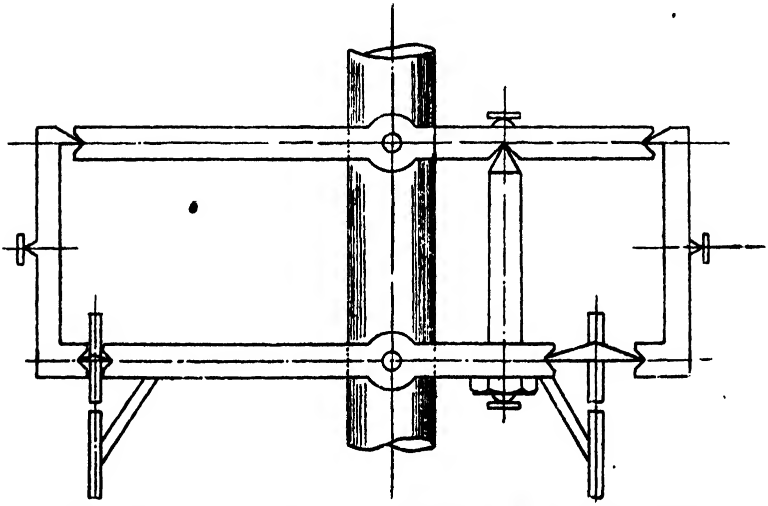

FIG. 325. MODIFIED ROBERTSON AND NEWPORT MIRROR EXTENSOMETER

In another form of this instrument (Fig. 325) two sets of mirrors are fitted, to enable observations to be made on either side of the specimen.

The Olsen Compression Micrometer

Fig. 326 illustrates a useful compression-strain measuring device suitable for measuring the compression of cast iron, other metals,

---

* *Institution of Civil Engineers*, Selected Paper 28, p. 12; and *The Metallurgist*, 22nd February, 1929.

and stone cubes. It has been specially designed to measure compression strains of specimens down to 1 in. in length.

This instrument has a multiplying system of levers, two at each end, whereby the very small strains are magnified at the micrometer screw end. It utilizes the principle of the electric contact method; the contacts are shown at the extreme right-hand side of Fig. 326.

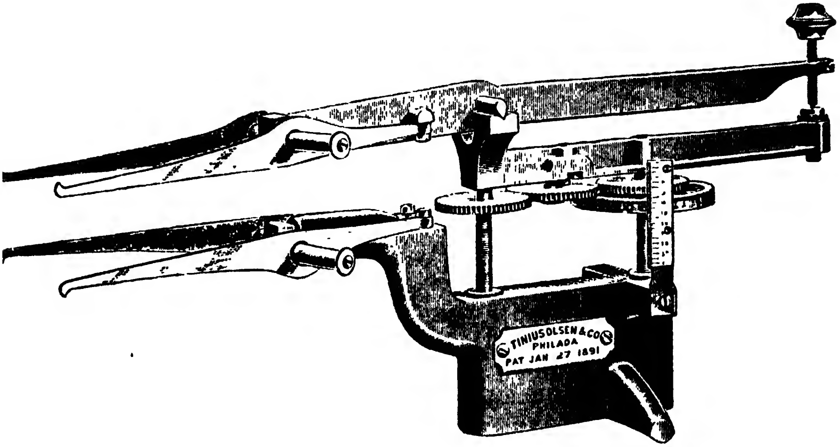

FIG. 326. THE OLSEN COMPRESSION MICROMETER FOR SMALL SPECIMENS

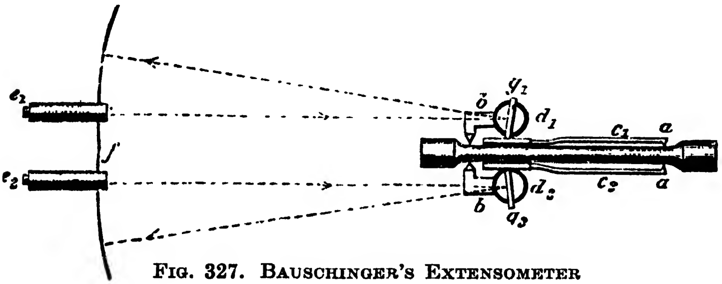

FIG. 327. BAUSCHINGER'S EXTENSOMETER

During a test the strain is measured by adjusting the micrometer until electric contact is just made, as indicated by the ringing of a bell, when the scale reading is taken; this is repeated for different loads. The instrument registers to one ten-thousandth of an inch.

Bauschinger's Extensometer

This extensometer consists of a pair of rollers and mirrors for measuring the strains, and enables the strains to be read off simultaneously upon opposite sides of the specimen. This instrument enables readings to be taken to $\frac{1}{3000}$ millimetre, or approximately to $\frac{1}{125000}$ in.

Fig. 327 illustrates the principle of the device.

The specimen is gripped by means of separate knife-edges at *a* and *b*, which are clamped in position. The clamp at *b* carries a pair of ebonite rollers, d_1 and d_2, upon well-aligned spindles, and each roller carries a mirror such as g_1 or g_2. Initially the mirrors are adjusted normally to the axis of the specimen, so that the telescopes e_1 and e_2 show reflections of the zero readings of the circular scales upon *f*. As the specimen stretches there is relative motion between *b* and *a*, and the rollers with their mirrors are prcgressively rotated, so that an observer looking through the telescopes sees the successive readings of the scales upon *f*.

For approximate purposes the mirrors may be replaced by long pointers moving over the same type of scale. If *l* be the length of the lever arm, *r* the radius of the roller, and *x* be the extension of the specimen to be measured, then—

$$x = r \cdot \frac{s}{l}$$

where s = the scale reading on *f*.

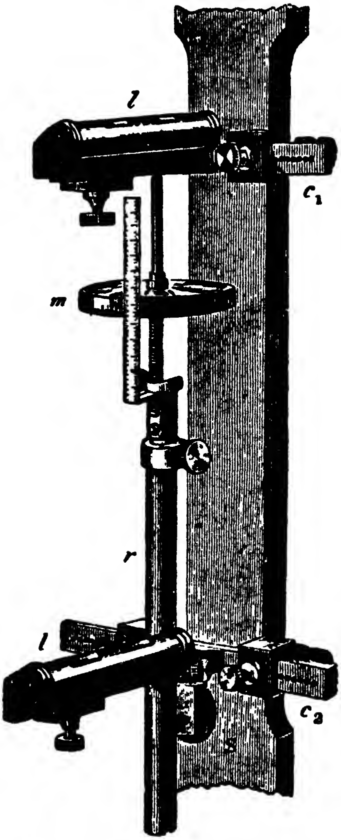

FIG. 328. UNWIN'S EXTENSOMETER

Unwin's Extensometer

This instrument, which is shown illustrated in Fig. 328, reads the strains directly by means of the vertical scale and vernier shown.

There are two clamps, c_1 and c_2, the lower one of which carries a spirit level tube *l* fixed rigidly to it, but provided with zero adjustment means at *s*. The upper level *l* is free to rotate about the points of the attachment screws, one of which can be just seen behind c_1. In its normal position the upper level rests upon the top of the micrometer-wheel vertical rod *m*.

Initially the two levels are adjusted to parallelism; as stretching occurs, the upper level rotates or swings downwards, and the micrometer *m* is screwed upwards to counteract this effect, until the levels are again parallel, the amount of vertical movement being read off the scales.

Readings can be taken to within $\frac{1}{10000}$ in. with this instrument, but its use necessitates a continuous adjustment of the micrometer wheel, so that it cannot be said to be self-contained.

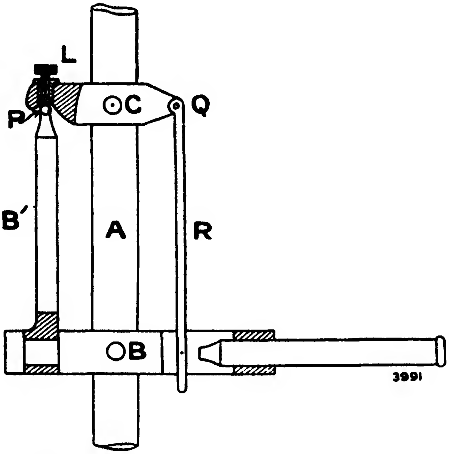

FIG. 329. ILLUSTRATING PRINCIPLE OF EWING'S EXTENSOMETER

Ewing's Extensometer

This instrument, which is self-contained and is both convenient and accurate to use in practice, is shown diagrammatically in Fig. 329 and in detail in Fig. 330. The former diagram will serve to explain the principle of the device.

The apparatus is clamped to the test piece *A* by means of two pairs of set screws attached to the clamping pieces *B* and *C* respectively, the points of the screws being accurately adjusted so that a definite length (8 in., 200 mm. or 100 mm.) of the specimen is under observation. An upright rod *B′* projecting from the lower clamp *B* ends in a rounded point *P* which engages with a conical hole in the upper clamp *C*, thus forming a fulcrum about which the clamp *C* rotates when an extension of the test piece takes place. A point *Q*, equally distant from the test piece on the opposite side of the clamp *C*, moves relatively to *B* through a distance equal to twice the extension of the test piece. This movement is measured by means of a microscope fixed in line with the clamp *B* and focused upon a mark on a rod *R* which is pivoted at *Q*. This mark is a fine line ruled on a glass plate set in an aperture in the rod and is illuminated by means of a small mirror.

The microscope is focused on the line and the displacement is read on a micrometer scale in the eyepiece, each division of which in the 8 in. instrument represents an extension of 0·0002 in. in the test piece. In the 200-mm. instrument each scale division represents an extension of 0·005 mm., while in the 10-mm. instrument the lever arms *CP*, *CQ*, are so proportioned as to magnify the extension four times, so that each division of the scale represents an extension of 0·0025 mm. on the test piece. Readings can be taken to 0·00002 in., 0·0005 mm., and 0·00025 mm. respectively. Lateral movement of the rod *R* is prevented by a guide fixed to the clip *B*. The conical socket for the fulcrum *P* is formed on the end of a micrometer screw *L* which can be adjusted to bring the mark on the rod *R* to a convenient point on the eyepiece scale of the microscope, and it also enables the magnification of the microscope to be tested and, if necessary, adjusted before carrying out a series of tests, so that a complete revolution of the screw *L* causes a displacement of the mark through 50 divisions on the eyepiece scale. The screw *L* has a pitch of 0·02 in. in the English and 0·5 mm. in the metric instruments. The eyepiece scale is graduated from 0 to 140; for the middle 120 divisions the readings are proportional to the actual movement of the test piece with an accuracy well within the limits of observational error.

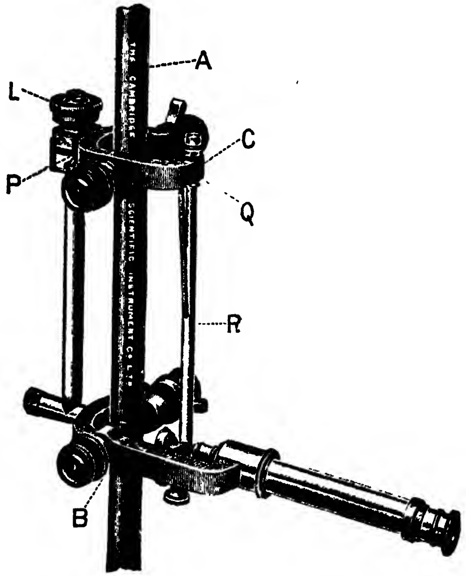

FIG. 330. EWING'S EXTENSOMETER

When making *observations on the behaviour of a specimen after the elastic limit is passed*, the movement to be measured may be so large as to carry the sighting mark out of the field of view of the microscope. By rotating the screw *L*, however, the mark can be brought back on to the scale, 50 divisions being added to the scale reading for each complete revolution of the micrometer screw. For observations within the elastic limit, the eyepiece scale is of ample length. A clamping bar is provided with the extensometer to facilitate the application of the apparatus to any specimen. This clamping bar, which is, of course, removed before the test commences, holds the clips *B* and *C* at the correct distance apart with the axes of their set screws parallel, while they are being clamped to the test piece. It is especially convenient for use when the strain has passed beyond the elastic limit and it is desired to reset the apparatus to the standard length on the test piece, the length of which has materially changed.

This extensometer is applicable to large or small test pieces and can be used on either vertical or horizontal testing machines, while it has the further advantage that no part has to be touched while the test is being made.

The Cambridge Extensometer

This instrument, which is suitable for both scientific and commercial use, is of simple construction and gives accurate readings of the strains during a test.

The instrument is illustrated in Figs. 331 and 332.

It is made in two separate pieces, each of which is separately attached to the test piece *M* by hard steel conical points *P*, *P* and P^1, P^1. The steel rods carrying these points slide in geometric slides, and after being driven gently into the centre punch marks in the test piece are clamped in position by the milled heads, *R*, *R*. Both parts of the instrument should be capable of rotating quite freely about the points, but there must be no backlash.

The lower piece carries a micrometer screw fitted with a hardened steel point *X* and a divided head *H*. It also carries a vertical arm *B*, at the top of which is a hardened steel knife-edge. The upper and lower pieces work together about this knife-edge. A nickel-plated flexible steel tongue *A*, forming a continuation of the upper piece, is carried over the micrometer point *X*. This tongue acts as a lever magnifying the extension of the specimen, so that the movement of the steel tongue to or away from the steel point *X* is five times the actual extension of the specimen.

To take a reading with the extensometer the thin steel tongue *A* is caused to vibrate, and the divided head then turned till the point *X* just touches the hard steel knife-edge on the tongue as it

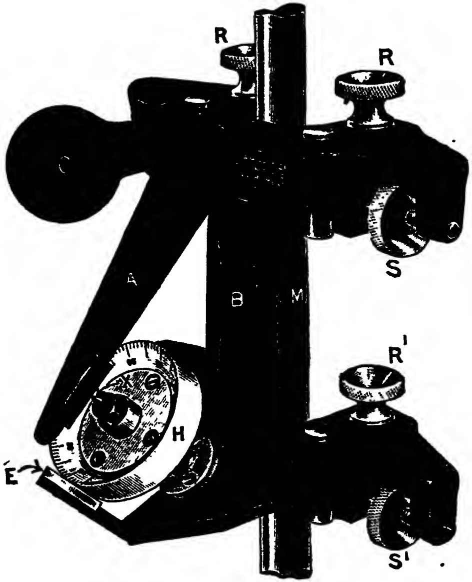

FIG. 331. THE CAMBRIDGE EXTENSOMETER (SHOWING MICROMETER DIAL)

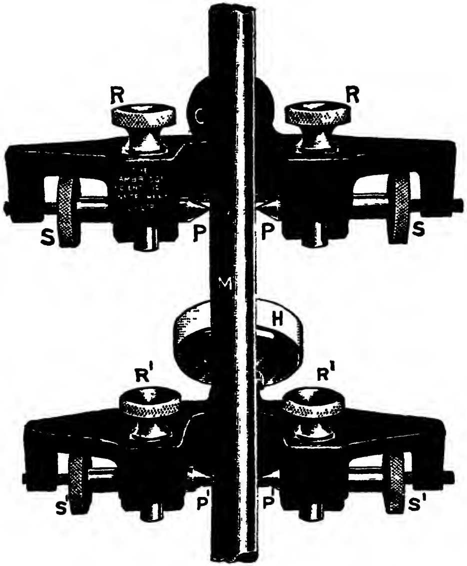

FIG. 332. THE CAMBRIDGE EXTENSOMETER (SHOWING METHOD OF CLAMPING TO SPECIMEN)

vibrates to and fro. This has proved to be a most delicate method of setting the micrometer screw, as the noise produced and the fact that the vibrations are quickly damped out indicate to $\frac{1}{1000}$ mm. the instant when the screw is touching the tongue. After the load is applied, a second reading is taken in a similar manner, and the difference in the readings gives directly the extension of the test piece.

If the test piece is of small diameter the spring does not vibrate in so satisfactory a manner; the cause of this is the flexibility of the test piece, the instrument itself vibrating as well as the spring. Still, very delicate readings can be taken by simply deflecting the spring with the finger and noting the contact as it passes the point. No damage can be done by advancing the micrometer screw too far forward; all that happens is that the point passes the knife-edge on one side or the other.

The extensometer is suitable for use with specimens up to 20 mm. (0·75 in.) diameter, and is made in two patterns, for centre points 100 mm. and 50 mm. apart respectively. A complete revolution of the micrometer screw corresponds to an extension of 0·1 mm. in the test piece, one division on the micrometer head being equal to 0·001 mm. extension. The instrument is also supplied to read in English units, one division on the micrometer head corresponding to 0·0001 in.

Since it is important to mark off the specimen with small punch centres at exactly the correct distance apart, a special marking off tool is supplied for this purpose.

Calibration of Extensometers and Strain Gauges

The readings of extensometers and strain gauges should be checked at regular intervals, more particularly in the case of instruments used for routine test purposes, by means of a suitable calibration apparatus to ensure that the absolute values are correct and as a check against errors due to wear or accidental damage to these instruments.

The principle employed for calibrating an extensometer is to compare its readings with those of a standard linear measurement instrument such as a comparator of the mechanical-magnification, optical or electrical types. Such comparators, which are used for checking gauges and engineering precision measurement devices, are available* for obtaining measurements to within a few millionths of an inch.

The actual method of attaching or adapting the extensometer to the comparator will depend upon the design and arrangement of the former instrument, but in the case of extensometers of the type using centre punch pricks and screw clamping attachments the arrangement illustrated schematically in Fig. 333 is applicable.

The adapter unit for mounting the extensometer between the

---

* *Engineering Precision Measurements*, A. W. Judge (Chapman & Hall, Ltd.).

comparator plunger and anvil contact members consists of an upper spindle or rod which is made a precision sliding fit in the upper part of a lower spindle member, a very light spring being used between the two spindles, together with an upper limit stop to prevent the two members from separating when removed from the comparator. The extensometer is attached to the parallel portions of the adapter and by making use of the adjustments on the extensometer and comparator the dial readings are brought to zero. The plunger of the comparator is then allowed to move upwards, gradually, by means of the usual plunger movement lever on the comparator, and simultaneous readings of the extensometer and comparator scales are taken over to extensometer scale range.

The tests should be carried out in a room maintained at the standard (British) room temperature of 68° F. and a calibration table or chart prepared.

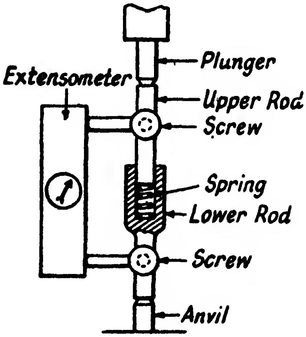

FIG. 333

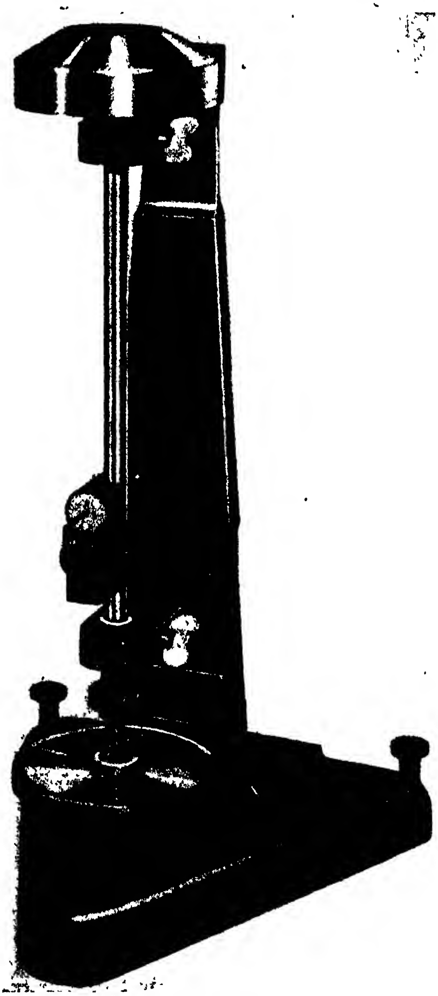

FIG. 334. THE OLSEN EXTENSOMETER AND STRAIN GAUGE CALIBRATION APPARATUS

A commercial extensometer and strain gauge calibration apparatus made by Tinius Olsen Company is illustrated in Fig. 334. The extensometer is attached to the vertical spindle assembly and the lower spindle of the latter is moved vertically up or down by means of the large diameter graduated wheel which operates a vertical micrometer screw. The reading of the graduated wheel rim is taken against a fixed vernier device, which permits a very accurate measurement of vertical movements to be made. Each graduation on the wheel is approximately $\frac{1}{16}$ in. apart and is equivalent to a vertical distance of one ten-thousandth of an inch.

The apparatus is designed so that readings can be taken both up and down the extensometer scale. A substantial base is provided with levelling screws and a spirit level for vertical alignment of the apparatus. A wide range of extensometer designs can be calibrated by means of equipment supplied with the apparatus.

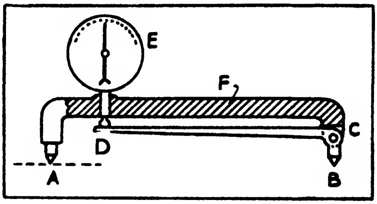

FIG. 335. ILLUSTRATING THE PRINCIPLE OF THE BERRY GAUGE

Strain Meters and Gauges

It is not always convenient, or possible, to use an extensometer for reasons connected with its delicacy and special means of attachment when it is required to measure strains in structures or engineering members.

Moreover, most extensometers usually measure axial strains, and not the surface strains, so that they are not applicable to the latter cases.

Special types of surface-strain extensometer, known as "strain meters" or "strain gauges," are now used commercially for measuring surface strains.

In principle the mechanical designs of these instruments measure the movement between a pair of marks, such as centre-punch impressions, made with a special jig device or marking gauge, so that the exact distance between the marks is known before the test commences.

The measuring points of the strain meter are inserted in these marks, and the relative movements of the marks during the test are measured, either by means of a micrometer screw or dial gauge.

A typical example of the latter form, known as the Berry strain gauge, is shown diagrammatically in Fig. 335. In this instrument the points *A* and *B* are placed in the centre marks on the specimen. The point *A* is fixed to the inner steel frame *F*, whilst *B* forms the short arm of a bell-crank lever *BCD*, pivoted at *C*. Movements of *B* in the direction *AB* are thus magnified at *D*, and are indicated on a dial type gauge reading to one ten-thousandth part of an inch.

The subject of electrical strain gauges is dealt with in some detail in Chapter XVI.

A Linear Movement Amplifier

In Fig. 336 is shown a diagram of the device for multiplying the effect of any linear displacement. A square brass rod, *L*, 0·5 cm. × 0·5 cm. × 18 cm. is the mechanical lever whose fulcrum is a fine steel cambric needle, *N*, passing through *L* and resting on the slot *V* of the fixed support *T*.

The virtue of this type of fulcrum is its rigidity to lateral displacements. At *K* is a slot in *L* in which rests a knife-edge forming a part of a stirrup. This stirrup is attached to whatever part it is desired to measure the change in length. At the outer end of the lever, a fine hole, *H*, is bored vertically through the brass rod so that the mechanical advantage of the lever is 16 : 1. Through the small hole a strip of fine phosphor-bronze ribbon is dropped and passes round a brass roller, *R*. The phosphor-bronze strip passes round on a reduced section of the roller which is very carefully turned to uniformity of cross-section. In order to keep the phosphor-bronze strip taut, a small weight, *W*, is hooked on to its lower end. A concave mirror, *M*, is attached to the roller, *R*, and as the point, *H*, moves up and down due to the motion of *K* the mirror is tipped, and so the deflection may be read off from the spot of light reflected from the mirror. Agate bearings are spun into the ends of the roller, into which steel cones fit that have been turned on the ends of the screws, S_1 and S_2. These give very great freedom to the rotation of the roller.

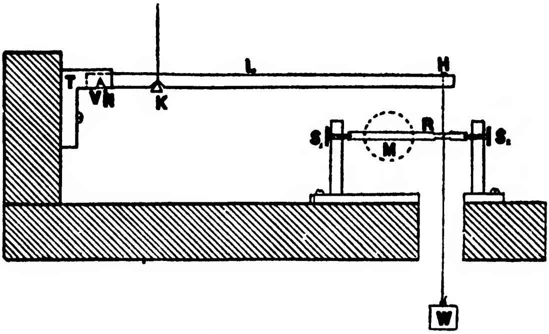

FIG. 336. A LINEAR MOVEMENT INDICATOR OF HIGH MAGNIFICATION

In calibrating the amplifier, a cord is attached to the stirrup and passed over a pulley to the table of a comparator. The distance the table of the comparator moves in one complete rotation of the roller gives a very accurate measure of the circumference of the roller from which the multiplication factor may be obtained, which converts the actual deflections of the spot of light into elongations of the materials measured.

An outfit in use at present has a multiplication factor of 65,000, and this could be extended for certain types of work to a greater value.

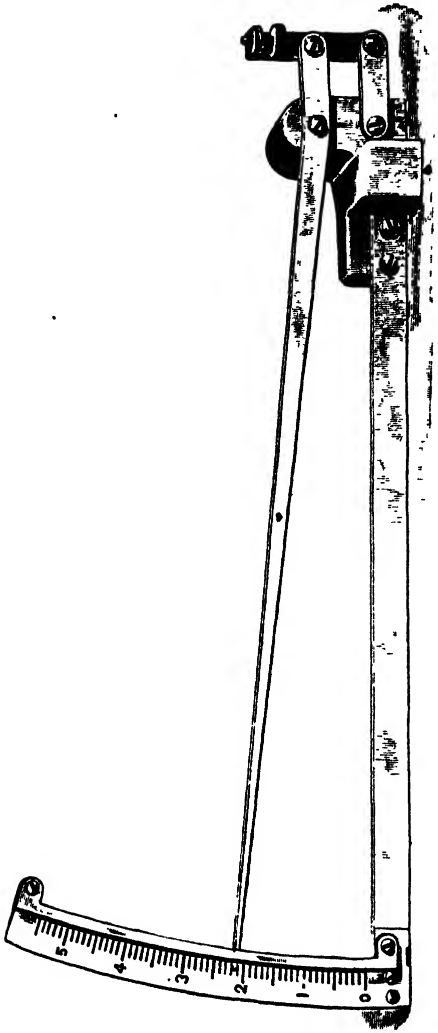

Fig. 337. A Simple Bending Test Deflection Indicator

A Bending Test Indicator

Fig. 337 illustrates a suitable form of deflection measuring device for making transverse tests. It consists of a simple system of pivoted levers, whereby the movement of the part of the beam under observation is magnified at the pointer ten times. The base of the instrument is secured to any fixed rigid part of the testing machine, and the small screw shown on the right adjusted so as to make contact with the lower face of the beam under test.

The Cambridge Scratch Extensometer

A small direct recording instrument, less than 4 in. long, with test points at 3 in. apart and weighing less than 1 oz. due to De Forest,* has been designed, primarily, for obtaining records of tension and compression in flat metal surfaces, struts, girders, and other stressed objects. It consists essentially of two members held together by a friction clip and capable of moving in one plane in relation to one another. Each member is held rigidly to the material under test by pressure applied to two hardened steel points, so that any expansion or contraction of the material between the points causes the members to move in relation to one another. One member carries a small polished plate or "target" of heat-treated plated steel, whilst the other carries an arm fitted with a stylus in the form of a diamond which scratches a record of the actual movement between the members on the record plate. This recording plate is pivoted about a centre two centimetres from the recording stylus, and is given an angular movement at right angles to that of the stylus by amounts that are proportioned to the changes in the strains recorded; that is, small changes in strain cause correspondingly small transverse movements. This is obtained by the "target" carrier being under a very light torque applied by a spring; the torque is not sufficient to move the "target" whilst the two members of the instrument are stationary, but will permit movement when they move in relation to each other.

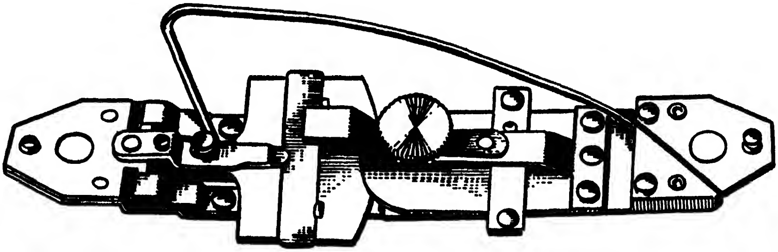

FIG. 338. THE CAMBRIDGE SCRATCH EXTENSOMETER

No movement of the target carrier occurs therefore when no change of stress occurs and the rate and extent of its transverse rotation will depend upon the extent of the movement due to a strain, and also upon the bearing tension applied to the target carrier; the latter is adjustable, and also the pressure of the diamond point. Records are not, therefore, made on a regular time basis.

---

* Cambridge Instrument Co., Ltd.

The records, which are very fine and of small dimensions, are viewed by a microscope, measurements being made with a graticule eyepiece; alternatively, photographic enlargements can be made.

Apart from its use on actual specimens, it can be used on stressed structures of various designs. Thus, an instrument used on a bridge girder will record the maximum stresses due to the passage of twenty or more trains, since the target moves only a minute distance as each train passes, and remains stationary during the intervening periods.

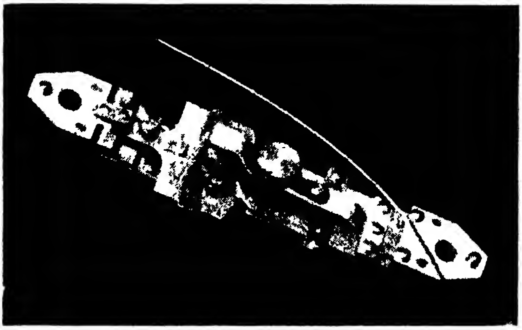

FIG. 339. SHOWING THE SMALL SIZE OF THE CAMBRIDGE SCRATCH EXTENSOMETER, WHICH IS SEEN HELD IN THE HAND

Since the instruments are small and inexpensive, a number may be used simultaneously on a single structure, thereby showing the distribution of strains due to loading and the relative strengths of a number of different members.

The subject of electrical strain gauges is dealt with in Chapter XVI.

CHAPTER XIII

SPECIAL TESTING MACHINES

Torsion Test Machines

MANY tensile testing machines are often provided with means for making torsion tests; one common method employed upon single lever, vertical type machines is to provide a suitable chuck having its axis coincident with the line of the knife-edges of the main fulcrum of the beam. One end of the torsion specimen, usually of square or castellated section, is inserted in this chuck, and the other end has a similar chuck fitted in the hub of a large worm wheel, actuated by a

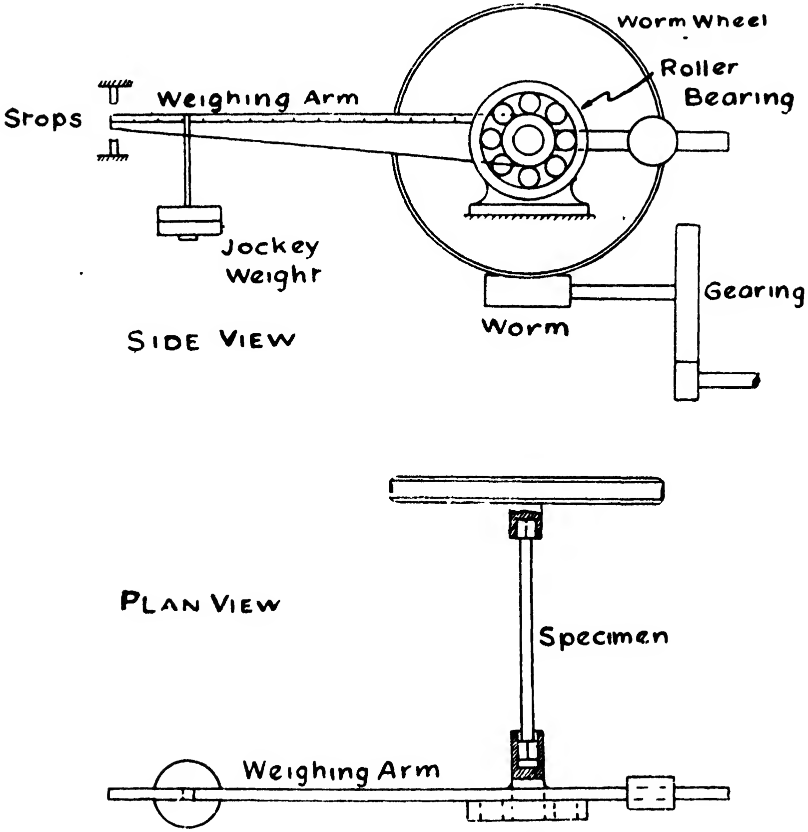

FIG. 340. TORSION MACHINE ARRANGEMENT

hand wheel or gearing through a worm. As the torque is applied by means of the worm and worm wheel, the other end of the specimen tends to rotate the weighing beam (which is initially balanced so that its C.G. coincides with the fixed fulcrum), and the torque is balanced by moving the travelling weight along the beam. The product of the weight and its distance from the axis of torsion, or fixed fulcrum, gives the torque upon the specimen. The worm wheel is usually provided with a dial and indicator to show the angular strains at different torques.

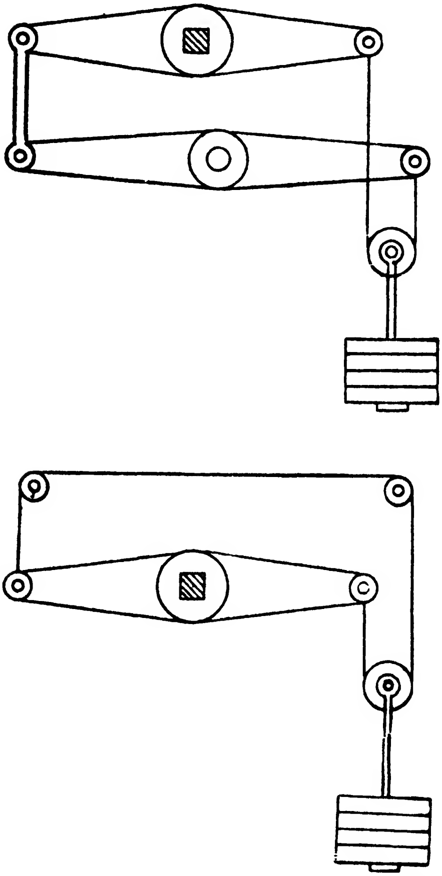

FIG. 341. SHOWING TWO METHODS OF OBTAINING A PURE TORQUE ON A SPECIMEN

Fig. 340 illustrates diagrammatically the principle of the torsion attachment to a single lever machine.

Fig. 341 shows diagrammatically two alternative methods of

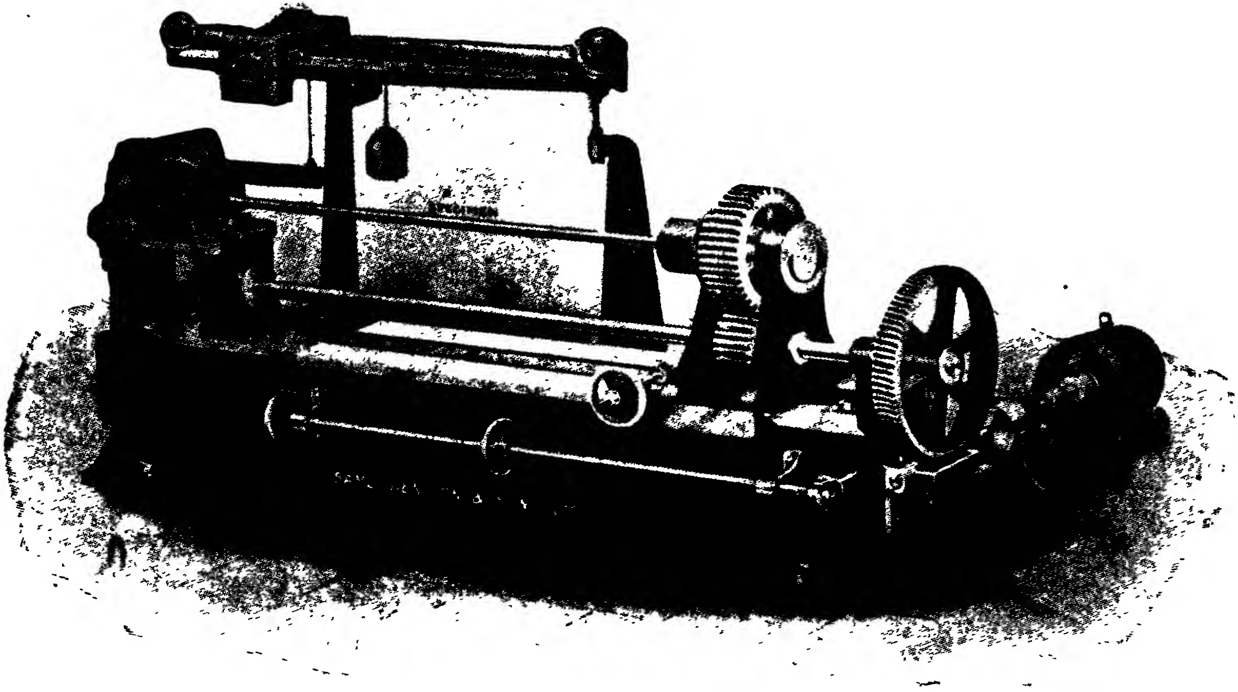

Fig. 342. The Denison Torsion Testing Machine

obtaining a pure torque, without the disadvantages of shearing action, which is present in single-arm torsion machines.

Another method depending upon the same principle as Fig. 340 is illustrated in Fig. 342, which shows a torsion testing machine made by Denison & Son, of Leeds, capable of applying torques up to 50,000 pounds-inches. The load is applied by means of a small high-speed electric motor driving the worm and worm wheel, seen upon the right-hand side of the illustration; this in turn works through a pair of gear wheels on to one end of the specimen. The other end of the specimen is attached to a chuck in a lever pivoted upon knife-edges, the longer end of which pulls, by means of the tension member shown upon the left-hand side, upon one side of an initially balanced weighing arm, which records the torque upon a suitably engraved scale.

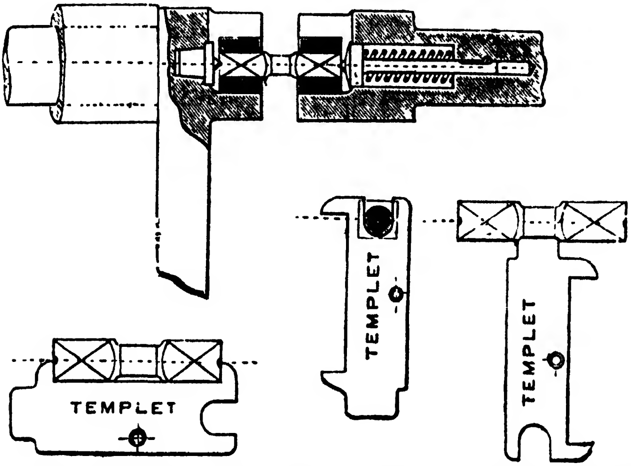

Fig. 343. Method of Holding Specimens for Torsion Tests

In this particular machine the travelling weight upon the weighing arm is moved automatically from its zero position along the beam as the torque is applied to the specimen, and thus always indicates, by its position, the amount of the torque at any moment.

The specimen, which is always in view and can be of any length up to 5 ft., is provided with squared or castellated ends; it is free to slide at one end during a test in order to accommodate the contraction in length accompanying torsional strain.

Fig. 343 illustrates the method of holding the specimen and the templets employed to obtain the standard proportions of the specimens. The specimen is centred between a fixed cente (left) and a spring-loaded sliding centre (right), the squared ends engaging with the hardened square-hole chucks shown by the deeper sectioning.

The Buckton Torsion Testing Machine

A sturdily built torsion testing machine,* capable of exerting a maximum torque of 10,000 pounds-inches and of accommodating specimens up to 24 in. in length, is shown in Fig. 344.

In this machine the specimen has one end inserted in a keyed socket on the torsion spindle and the other end in a keyed socket concentric with the central bearing of the steelyard.

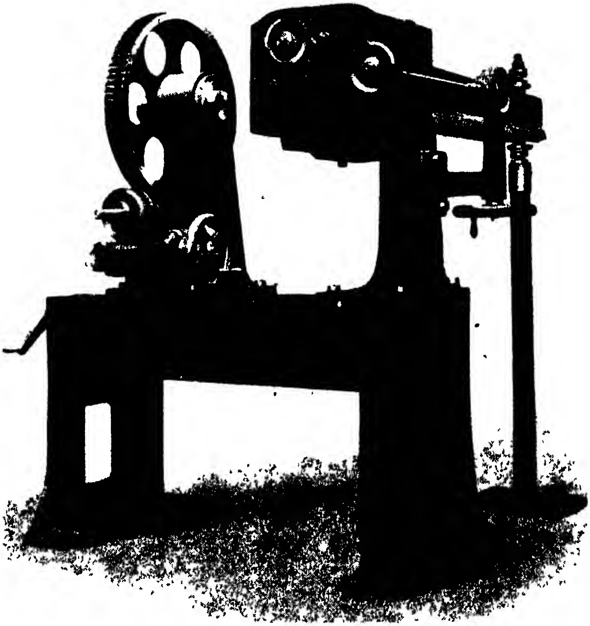

FIG. 344. THE BUCKTON TORSION TESTING MACHINE (10,000 LB.-INCHES TYPE)

The stress is applied by means of a hand wheel through double-reduction worm gear. The secondary worm can be put out of engagement by means of a small handle and single reduction used when desired.

The gear gives either 4° with a single worm in action or $\frac{1}{10}°$ with both worms in action, per revolution of the hand wheel.

The steelyard carries a duplex poise weight and two scales giving readings, having a ratio of 5 : 1 to 1 : 1 for large and small specimens respectively.

The poise weight is operated by means of a hand wheel and suitable

---

* Messrs. Craven Bros., Ltd., Stockport.

gearing, and is provided with a frictionless universal joint to allow for the movements of the beam.

The whole machine is mounted upon a strong cast iron table on which the pillar carrying the torsion gear is movable for varying lengths of specimens.

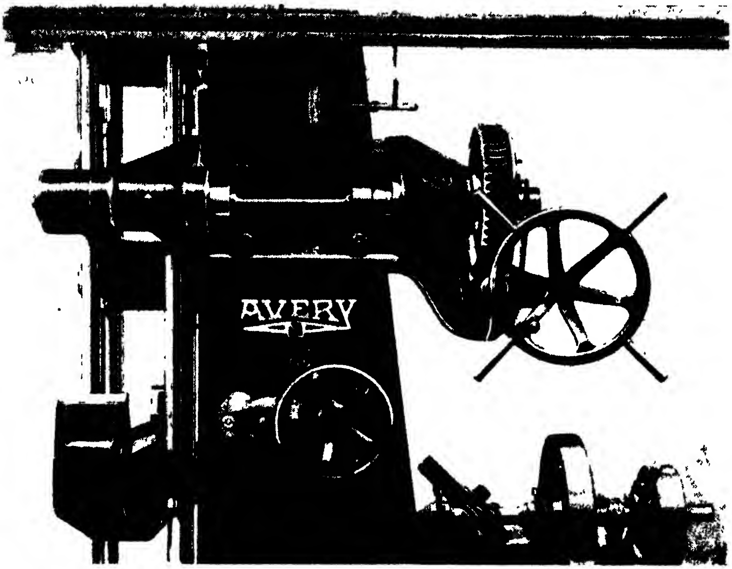

FIG. 345. THE AVERY-BUCKTON TORSION TEST ATTACHMENT

Avery-Buckton Torsion Test Attachment

Torsion tests can be made on the Avery-Buckton vertical single lever machine, described on page 362, by means of the attachment

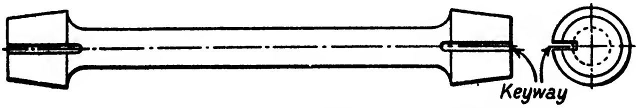

FIG. 346. SHAPE OF TORSION TEST SPECIMEN

illustrated in Fig. 345. This consists of a single unit bolted to the column of the machine. The specimen, which has the shape outlined in Fig. 346, is held at one end in a holder, which is attached to a shaft rotated by the hand wheel shown through spur and worm gearing. At the other end the specimen is secured in another holder mounted in ball bearings and attached to an arm, the end of which is in connection with a subsidiary knife-edge in the steelyard, when the torsion tests are being made.

The pull on the end of this arm, due to the movement of the poise weight on the steelyard, provides the necessary resistance to the torque applied to the specimen, and this is recorded in inch-pounds on the steelyard scale.

The method of preparing torsion specimens is to cut a keyway in the specimen as shown in Fig. 346. The specimen can then be keyed to adaptors (which are themselves keyed to the holders) in the worm-shaft and lever-end, respectively.

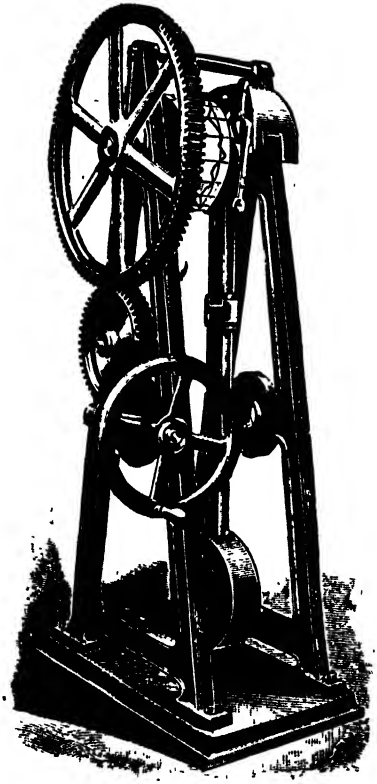

FIG. 347. THE BAILEY-THURSTON TORSION MACHINE

Fig. 347 illustrates another type of torsion machine, made by Messrs. Bailey & Co., and due to Professor Thurston, in which the torque is applied to the specimen by means of a hand-wheel-operated worm and worm wheel, and a pair of gear wheels, and is measured or balanced by means of a vertical pendulum upon the same axis as the specimen, which swings out of the vertical as the torque is applied, the angle of swing being a measure of the torque. Thus, if l = the distance of the C.G. of the pendulum from the axis in inches, W = its weight in pounds, and θ = its angle of deflection measured from the vertical, then the value of the torque upon the specimen is: $Wl \sin \theta$ pounds-inches.

This machine is provided with an autographic recording apparatus, which consists of a cylindrical drum, upon which the paper is fixed, and is itself concentric with, and attached to, the movable chuck holding one end of the specimen; the angular strains are thus measured directly. The ordinates of the curve drawn are proportional to the swing of the pendulum—that is, to the torque—the recording pencil being attached to the pendulum.

Measuring Torsional Strains

It is usually an easy matter to measure the angular strains in torsion tests, as the observed strains are, relatively, much greater than those occurring in tension or compression tests; thus, a circular bar of mild steel of length equal to about 10 diameters will make several complete revolutions at one end before it twists off.

The principle of most of the devices employed for measuring torsional strains is to fix a telescope or cathetometer to the fixed end of the specimen, and parallel to it, at a convenient distance from the centre. The other end carries at the same radius a graduated circular scale, clamped normal to the rotating end of the specimen. Readings are made by looking through the telescope on to the scale.

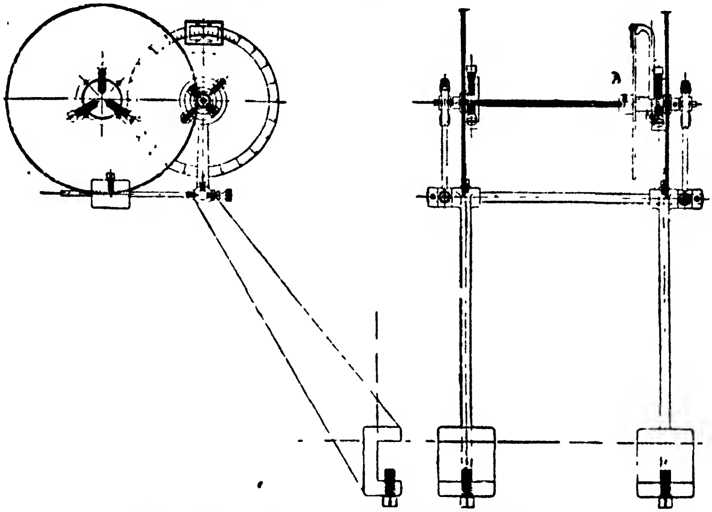

FIG. 348. THE RIEHLÉ TORSION METER

Fig. 348 illustrates the Riehlé torsion meter, which is employed for determining the elastic limit, spiral angle, and torque-strain readings to within five minutes of arc. The device consists of two pairs of gears, each comprising a smaller and a larger gear wheel, in the ratio of 1 to 3; the smaller gear wheel of each pair is fixed securely, by means of three hardened and pointed screws, to each end of the specimen. The larger gear wheels are carried upon a separate frame, and are provided with universal joints for alignment purposes, so that it is only necessary to take their readings with fixed verniers during a test. In this instrument the angular torsion strains are reduced in the ratio of 1 to 3. To prevent any backlash of the gears from interfering with the readings, the larger pinions are either weighted upon one side, or are provided with an automatic radial adjustment which always keeps the gears fully in mesh.

This instrument is designed to take readings over lengths varying from 2 in. to 10 in., and upon diameters up to 2 in.

A Mirror Torque Meter

A simple and accurate method of measuring torsional strains employed at the National Physical Laboratory (Fig. 349), utilizes two mirrors, M_1 and M_2, fixed to cranked brackets clamped at the ends of the specimen AB, as shown. The two clamping points are arranged at a known distance l apart; this distance is 4 in. in the N.P.L. instrument. By means of the cranked brackets the mirrors M_1 and M_2 are arranged side by side, so that both can be viewed in the same telescope (as shown in the right-hand diagram). Each mirror reflects into the telescope the image of the scale. As the specimen twists the moving mirror scale image varies in position, and the difference between the readings of the two scales, therefore, gives the torqué angle. In fixing the two mirrors it is important to ensure that their planes, when produced, will pass through the axis of the specimen.

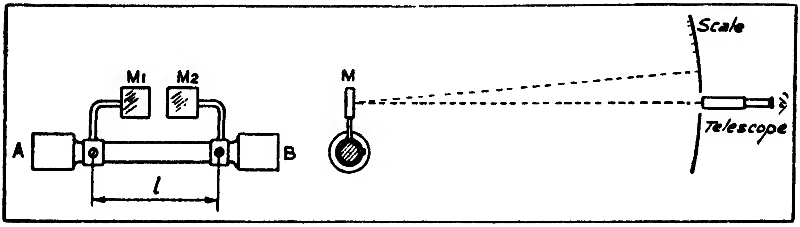

FIG. 349. SHOWING PRINCIPLE OF THE N.P.L. TORQUE METER

Wire Testing Machines

In the manufacture of metal wires it is important to know whether there are any flaws or defects in the wires due to weaknesses in the material or to faults in the rolling and wire-drawing processes.

The manufacturer requires, therefore, some simple but fairly accurate and reliable means of testing samples from each batch of wire drawn in order to detect such flaws.

Special wire testing machines are now available for this purpose, so that the wire specimens can be tested in torsion and in tension rapidly. Longitudinal flaws are best revealed by torsion tests.

Fig. 350 shows the Avery twisting machine for wires. It consists of a fixed grip member (on the left) for holding the specimen, and another rotary grip member operated by the hand wheel shown on the right. A counter is provided for indicating automatically the number of twists up to 140 which wires will withstand without fracture. At the conclusion of a test the counter can be reset to zero.

This machine will take wire specimens up to ¼ in. diameter with a maximum free length of 8 in. Three sets of hardened steel gripping dies are included for various diameters of wires.

An elongation measuring machine is shown in Fig. 351.

This machine is designed primarily for the purpose of checking the ductility and the annealing qualities of copper and other wires. The wire is secured between suitable gripping dies which are fitted into two holders, one of which is caused to travel by the rotation of a hand wheel, thus producing an extension in the length of the wire. The percentage of extension over the original length which the wire will withstand before breaking is a very useful guide to the annealing and the ductile properties of the wire.

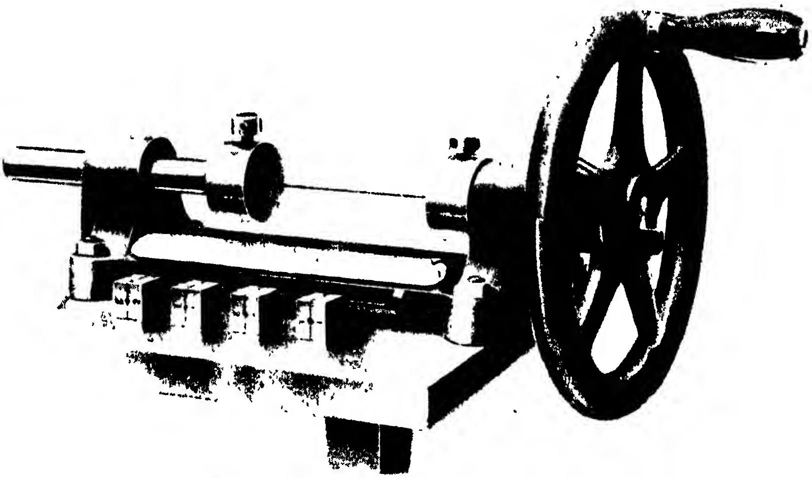

Fig. 350. The Avery Wire Twisting Machine

Tests can be carried out with great rapidity, and the percentage of elongation read off instantly, thus making the machine very useful for works.

Fig. 352 shows a tensile testing machine for wire, of the hand-operated type, for mounting on a test bench. It belongs to the screw-actuated straining gear type with a steelyard and sliding poise for determining the load on the specimen. The loading is applied to the latter by means of the hand wheel shown below; this operates a square-threaded straining screw through bevel gearing. The screw does not rotate. The weighing system consists of a steel steelyard fitted with hardened knife-edges, the fulcrum edge being mounted upon a hardened steel bearing on the standard. The cast iron poise is moved by a hand wheel through gear wheels operating a screw. To balance the steelyard when the poise is at zero an adjustable balance ball is fitted

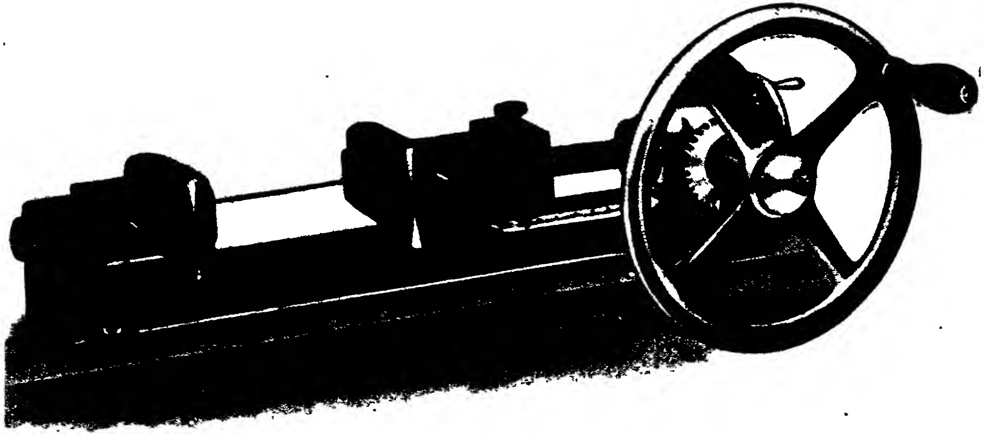

FIG. 351. A SIMPLE MACHINE FOR MAKING TENSILE TESTS ON STRIP AND WIRE

to the back end of the steelyard; the flotation of the latter is controlled by a carrier pillar fixed to the arm of the standard at the extreme end of the steelyard.

The larger capacity machine has a load capacity of 100 lb. by 1 lb.

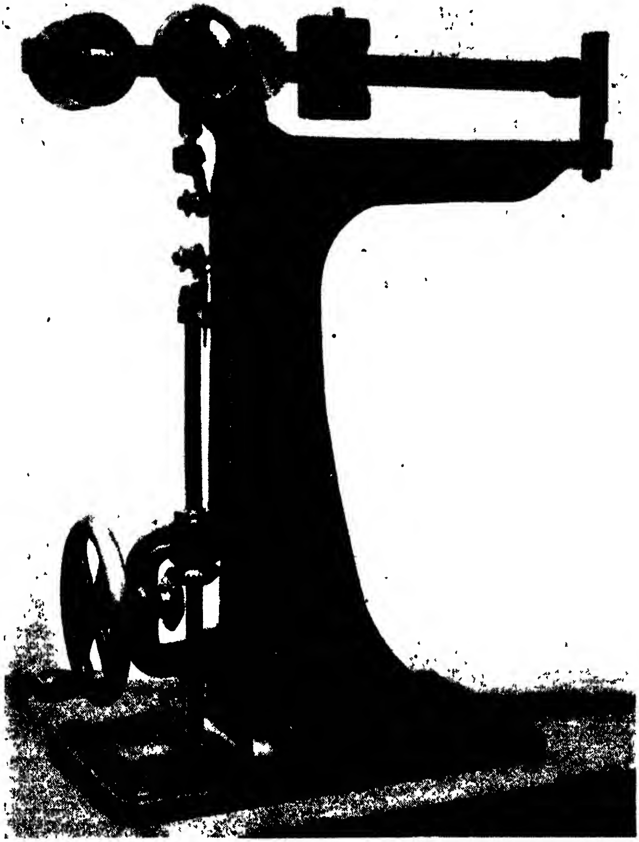

FIG. 352. THE AVERY WIRE TENSILE TESTING MACHINE

divisions with vernier readings of 0·1 lb. The smaller model is of 50 lb. capacity with 0·5 lb. divisions and vernier readings of 0·05 lb.

Various alternative types of tensile wire testing machines are available for hand, hand and electric power, and automatic electric power loading. A typical example of a semi-automatic machine is the Avery Type 1010 (Fig. 353) which is made in capacities of 4000, 6000, 8000 and 10,000 lb. It utilizes a pendulum and quadrant for indicating the load on the specimen and employs either hand-driven or electrically-operated straining gear. The machine complies with the A.I.D.

requirements for proof stress determinations. The motor-driven straining gear consists of a power-driven spur and worm gearing, the worm-wheel being screwed to operate the straining screw. A double-thrust cone clutch enables the straining holder to be operated in either direction without stopping the motor. The provision of a hand wheel makes hand-straining available as an alternative. The weighing gear, as before mentioned, is of the pendulum type, the load being transmitted

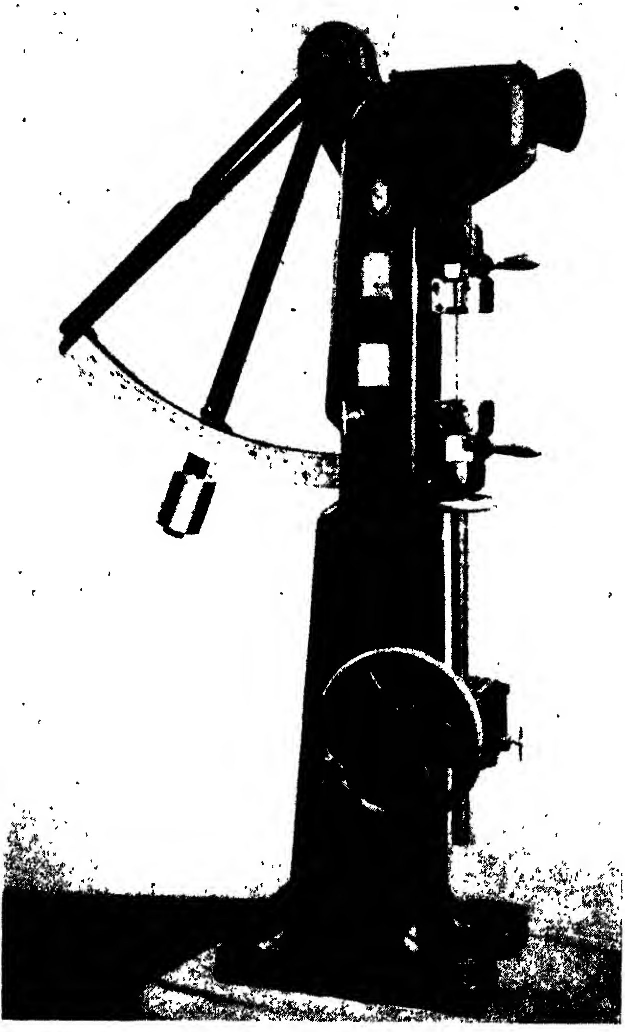

FIG. 353. A SEMI-AUTOMATIC WIRE TENSILE TESTING MACHINE

from the top holder to the pendulum by means of two weighing levers fitted with hardened steel knife-edges and bearings. The pendulum rises automatically and indicates the load applied on a graduated sector scale. Pawls are provided on the pendulum to prevent any backward slip when the specimen breaks whilst enabling the pendulum to stop at any position on the quadrant.

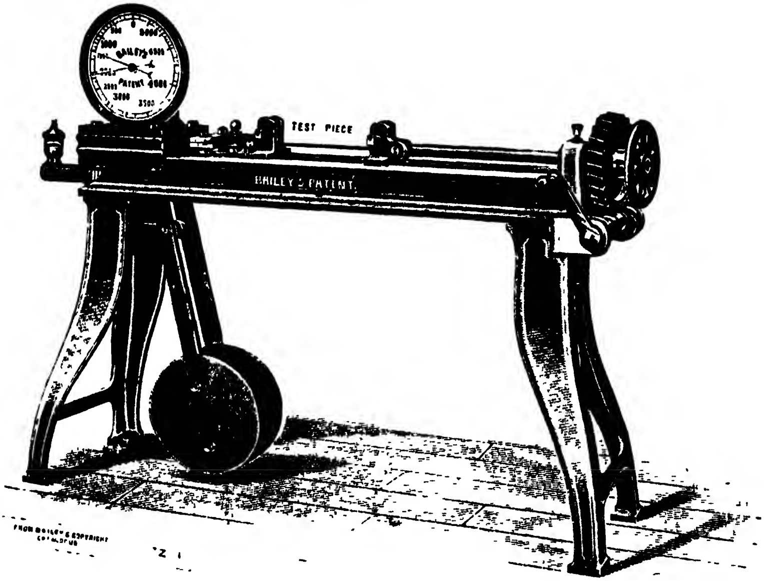

FIG. 354. THE BAILEY WIRE TESTING MACHINE

Cable Testing Machines

Larger sizes of wires and cables in short lengths can, sometimes, be tested in ordinary tensile-testing machines, whilst longer lengths of wire ropes, cables and chains are tested in tension in special horizontal machines of the type described later in this section, but for the smaller sizes employed in aircraft work and occasionally in light car construction, the usual tensile-testing machine possesses the following disadvantages, namely: (*a*) That the small loads cannot be accurately measured; (*b*) that the lengths of wire or cable require to be fairly short; and (*c*) that the machine is generally too massive and cumbersome to use. Where wires, small rods, or cables, require to be tested in any number, it is advisable to employ a special wire testing machine. For aeronautical work, one with a capacity up to 8,000 lb. or 10,000 lb. is convenient.

The machines shown in Figs. 350 and 351 are suitable for smaller sizes of wire or cable.

Fig. 354 illustrates an inexpensive horizontal pendulum type of wire testing machine, made by Sir W. H. Bailey & Co., in which the load is applied by hand through a handle, worm, worm wheel, and screw, and is measured by the angular movement of the pendulum shown, which records the total load upon a dial. The dial, which is graduated

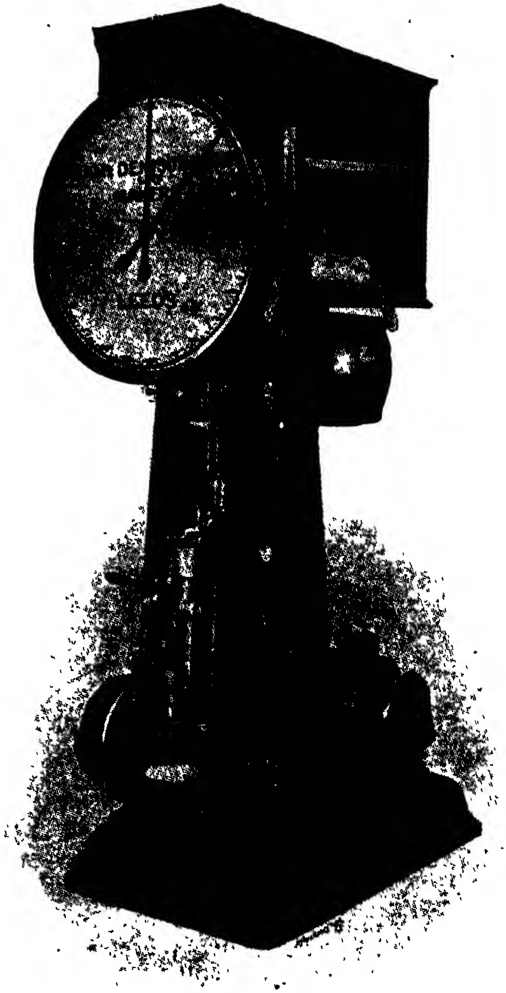

FIG. 355. THE DENISON WIRE TESTING MACHINE (10,000-LB. TYPE)

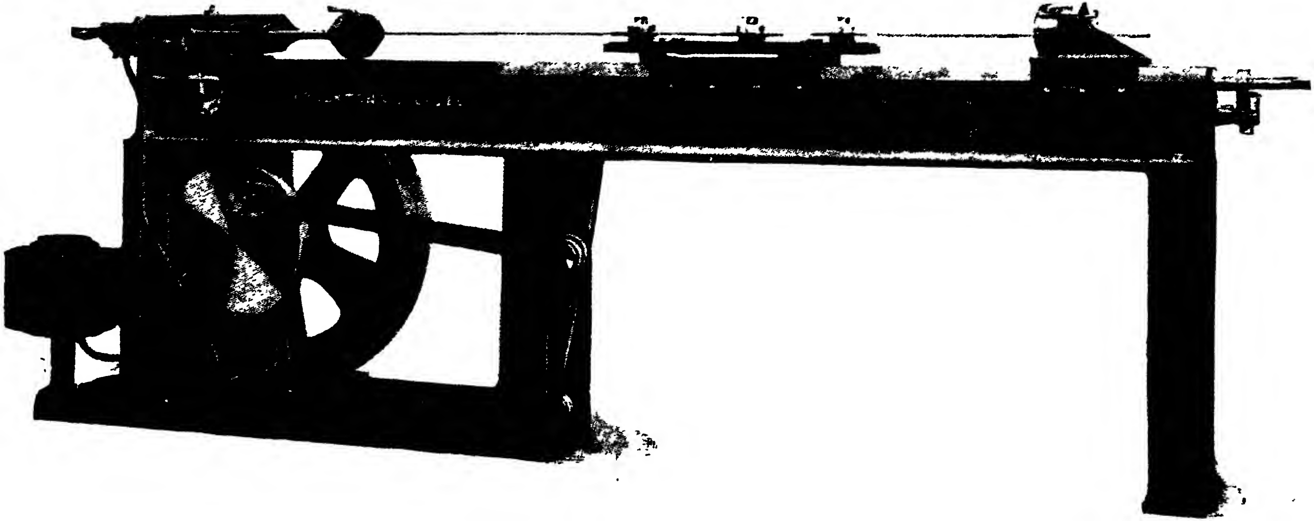

FIG. 356. THE VAUGHAN-EPTON WIRE FATIGUE TESTING MACHINE

up to 5000 lb., is provided with a pointer for marking the maximum load An oil buffer is provided to allow the pendulum to return smoothly after a test. Specimens up to 18 in. in length can be accommodated in this machine.

Fig. 355 shows a more elaborate wire testing machine made by Messrs. Denison & Son, with a capacity up to 10,000 lb., and in which the load is applied at a given rate by means of an electric motor, which drives through a flat belt, the worm gearing actuating the load-application screw. This machine works upon the lever principle, the loads being indicated upon a large dial provided with a maximum hand, which is pushed around by the moving hand and remains at the maximum load reading after fracture of the specimen. This machine is also provided with autographic apparatus for load-strain diagrams; the principle of this device may be followed from the diagram, which shows the strain levers, cord, and pulleys actuated by the movement of the lower grip, which pulls a cord around the horizontal drum. The load mechanism can also be traced from the illustration. In this type of machine the wire is held in wedge grips fitted with a quickly attachable arrangement for inserting the wire.

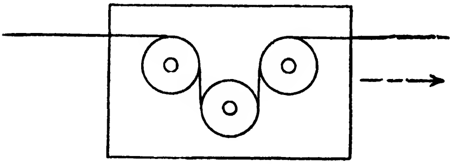
Fig. 357

Other types of wire testing machine work upon the manometric principle, and the more elaborate forms are provided with automatic devices (usually electrical) for applying the load at a given rate, and recording loads and strains.

In a large number of instances the stresses experienced in practice by wires and cables are alternating in character; a common example occurring in practice is that of a wire under combined bending and tension, as in the case where pulleys are employed.

A machine, known as the Vaughan-Epton type, has been devised for testing wire and cable in this manner, and is shown illustrated in Fig. 356. The wire or cable under test is fixed at the right-hand end in a fixed friction chuck or grip, and passes around three horizontal pulleys, the centre one of which is out of line with the other two (as shown in Fig. 357). The pulleys are carried upon a crosshead which can be driven to and fro upon the gantry of the machine by means of the crank and eccentric motion shown on the lower left-hand side. The other end of the wire or cable is attached to a chuck forming part of the ram of a horizontal cylinder, which in turn is in connection with a small variable load accumulator by means of which a constant load of from 1 lb. to 1000 lb. can be applied to the wire under test. A special counter is provided for recording the number of strokes of the crosshead, and means are provided for taking up the stretch of the wire, whilst keeping the constant initial load upon it. A small compensating pump is provided for supplying pressure to the accumulator. When the test has proceeded to the point where fracture of the wire occurs, the counter is thrown out of action and the driving belt is moved on to a loose pulley. It is also possible to give the wire any initial degree of torsion, if desired.

Chain and Wire Rope Testing Machines

Chains for marine and general engineering purposes are tested in tension in accordance with the requirements of the Board of Trade, the Home Office Regulations or the Railway Clearing House, on special horizontal type testing machines. The latter are also suitable for testing hemp and wire ropes, cable and railwav couplings and drawbars in tension. The tests made are usually for the purpose of checking the proof load values, but occasionally in the case of batches of new chains, specimens may be tested to destruction.

The Admiralty *proof loads* for iron chains are approximately equal to $12d^2$ tons for short link chains, where d = diameter, in inches, of the iron of the chain. The safe load is one-half of the proof load, i.e. $6d^2$. The breaking load must not be less than $27d^2$ tons.

For steel chains an approximate rule is that the safe working load should not be less than $0{\cdot}4\,fd^2$, where f = safe tensile stress for the material. For *long-link chains* the maximum safe working load should not exceed 0·67 of the corresponding value for a short link chain of the same diameter.

Single links of large chains can be tested in tension to the breaking point by means of special adapters supplied with vertical type tensile testing machines. A typical example of such an adapter is that shown in Fig. 358.

A typical chain and rope testing machine is illustrated in Fig. 359. It has a capacity of 30 to 100 tons and will deal with specimens up to 30 ft. in length; it can, however, be supplied to suit a ship's cable of 90 ft. (15 fathoms).

The machine consists of a hydraulic cylinder and ram for applying the load to the chain. This straining mechanism is located at one end of a long compression frame or bed. At the other end is situated the weighing system, by means of which the load on the chain is measured. The stroke of the hydraulic ram is arranged to suit the maximum length of the specimen, special provision being made in regard to the stroke when long hemp ropes are to be tested.

If the machine is required to test specimens shorter in length than the maximum, two long tension bars, running the full length of the bed, can be provided. These are arranged with circular holes, pitched at regular distances apart; this enables the straining holder to be traversed along the bed by hand and connected up to the two tension bars to suit the length of the specimen to be tested.

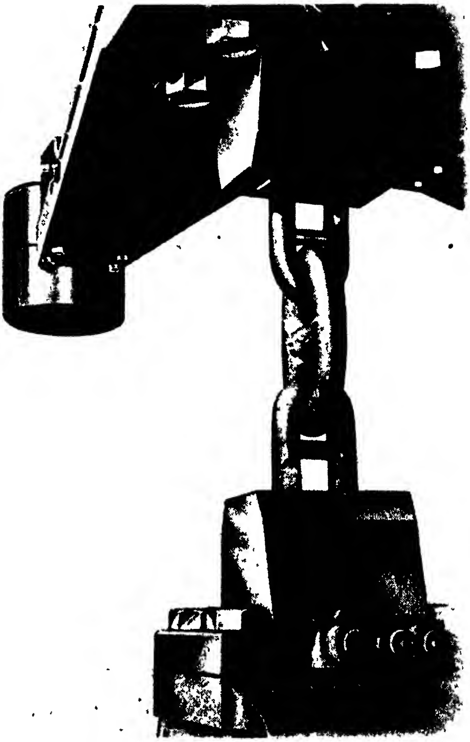

FIG. 358. SHOWING METHOD OF TESTING A SINGLE CHAIN LINK IN VERTICAL TYPE TENSILE TESTING MACHINE

The weighing system consists of a bell-crank lever connected up to a steelyard overhead. Both members are provided with steel knife-edges, hardened and ground and so proportioned that *the load per linear inch* does not exceed 5 tons. The steelyard is graduated up to the full capacity by subdivisions of 0·01 ton, and is traversed by a poise under the control of a hand wheel placed adjacent to the valve of the hydraulic cylinder. The operator can therefore carry out the test without change of position.

Mention may also here be made of a 750 ton chain, cable and anchor testing machine,* by the same manufacturers, that is used for

---

* Described in *Engineering*, 25th November, 1932.

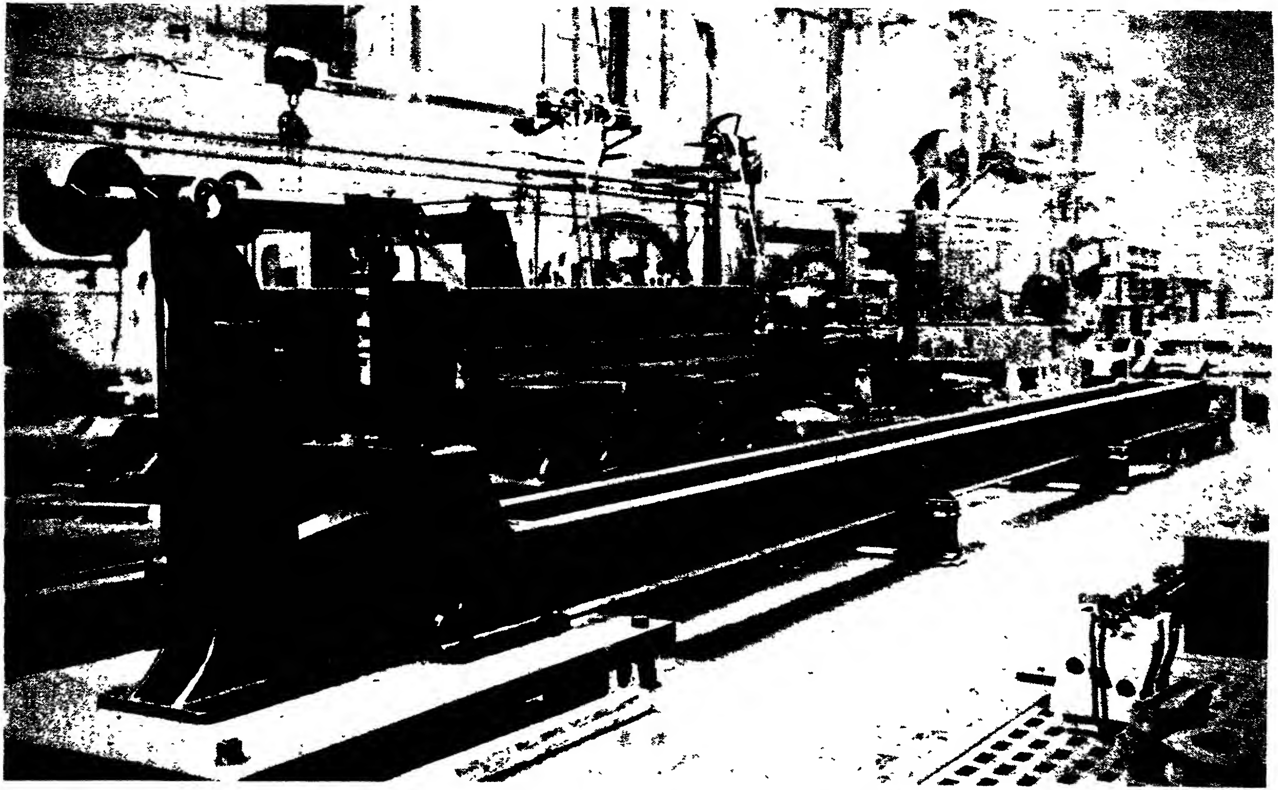

Fig. 359. The Avery Chain and Wire Rope Testing Machine

testing marine equipment in conformity with the Board of Trade requirements. The chain cables and anchors of the Cunard-White Star liner *Queen Mary* were tested on this machine. It has an overall length of 180 ft. and can test cables up to 100 ft. in length and anchors to a maximum width of 13 ft.

Transverse Testing Machines

It is often necessary to make quickly a number of successive tests upon a standard size of beam, and for this purpose it is very convenient, not to add inexpensive, to employ a simple type of machine designed expressly for the purpose.

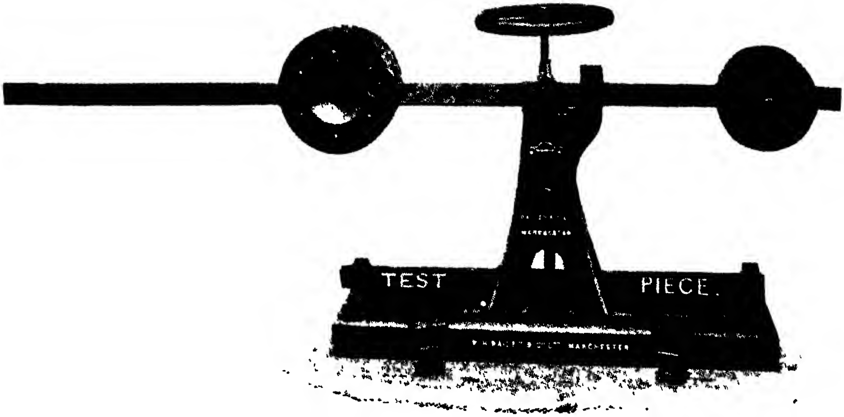

Fig. 360. The Bailey Transverse Testing Machine

Fig. 360 shows such a form of machine, made by Sir W. H. Bailey & Co., for testing bars of cast iron, gunmetal, concrete, etc., in bending. This machine is designed for bars 2 in. deep by 1 in. wide by 3 ft. span, and loads up to 40 cwt. can be applied at the centre of the beams. The machine is of the single lever type, and the sliding jockey weight is provided with a milled head for slowly moving it along the weighing arm.

The Avery foundry testing machines for cast iron bars include a simple pattern corresponding to that shown in Fig. 360, and a special machine (Fig. 361) capable of carrying out both tensile and transverse tests. It has a tensile test capacity of 80 cwt. and transverse one of 50 cwt.

The specimen for the tensile test is made to a finished diameter of 0·564 in., corresponding to a cross-sectional area of 0·25 sq. in. The specimen is held in wedge grips.

The load is applied by means of a hand wheel, and is communicated through the medium of an intermediate lever to the steelyard, where it is balanced by a poise-propelled hand wheel at the headstock.

The transverse test is conducted by inserting the test bar (shown dotted in Fig. 361) through adjustable dogs, the load being applied by the hand wheel previously mentioned; the load is communicated direct to the steelyard. The subdivisions on the steelyard are 28 lb. A deflection scale of the micrometer type is provided to give readings by $\frac{1}{1000}$ in. on the transverse test.

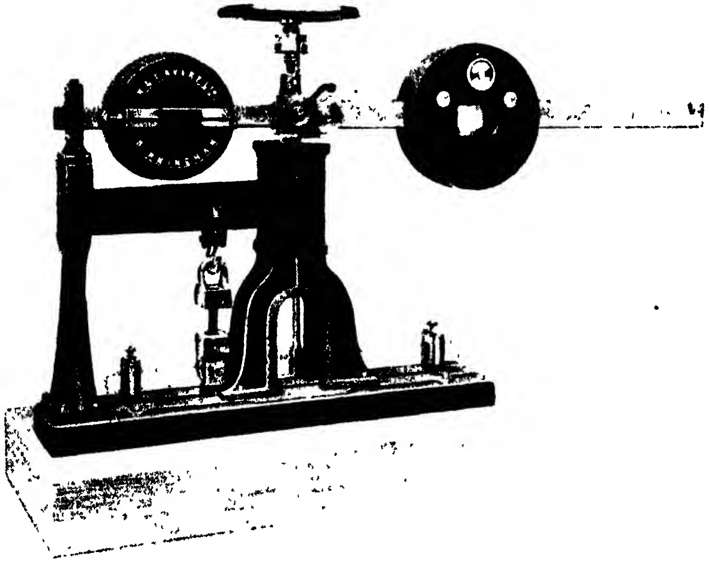

Fig. 361. The Avery Combined Tensile and Transverse Testing Machine for Cast Iron

Specimens for the latter test may be of any section up to 2 in. × 1 in., and may be set to spans of 12 in., 24 in., and 36 in.

A more elaborate form of transverse tester, made by Messrs. Olsen, of Philadelphia, is shown in Fig. 362.

This machine is provided with an autographic apparatus for drawing large-scale load-deflection diagrams right up to the breaking-point. The weighing mechanism is of the combined lever and pendulum type, and has a capacity in the smaller type of machine of 2500 lb., and, by employing additional pendulum weights of 5000 lb., in the larger type, loads of 5000 lb. and 10,000 lb. are provided for.

The load is applied by means of the hand wheel and screw at a constant rate.

The sizes of test bars employed are 1 in. square by 12 in. span in the smaller machine, and 2 in. square by 24 in. span in the larger machine.

Spring Testing Machines

For statical tests on springs of different types, machines of very simple design are now available; these, in general, consist of a screw or hydraulic loading device and a weighing apparatus similar to that employed upon tensile-testing machines. Means are provided for running on the load, usually by means of belt-driven pulleys and gearing, and gauges are fitted for indicating the deflections of the springs. Fig. 363 shows a typical form of static spring testing machine suitable for compression and tension springs of all kinds, including spiral and laminated leaf springs of railway and motor-car type. The load is applied by means of a square-threaded screw, provided with bevel gearing, belt-driven, a ball-bearing thrust washer being provided to take the thrust of the screw. The deflection is measured by the movement of the screw itself.

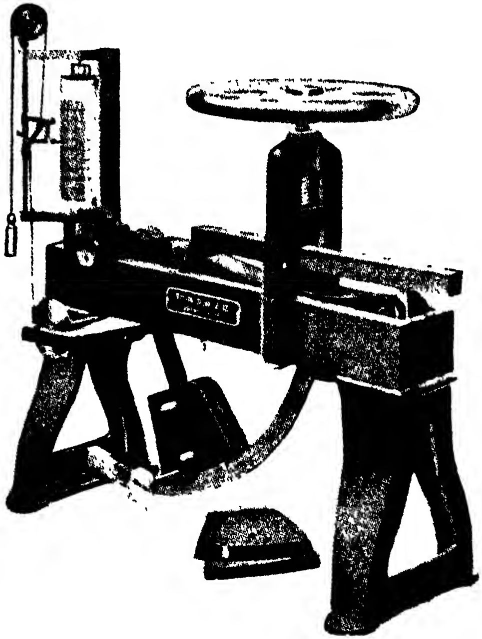

Fig. 362. The Olsen Transverse Autographic Testing Machine

The machine illustrated can be adapted to fatigue or shock tests by the provision of a belt-driven hammer acting upon the spring whilst under an initial static load.

Special testing machines for dealing with tension and compression springs of the helical pattern are now available, for it has become recognized that in automobile and general engineering work the best performance can only be obtained if all the springs of a uniform type possess the same mechanical properties. The inlet and exhaust valve springs of automobile multi-cylinder engines are an example of this requirement.

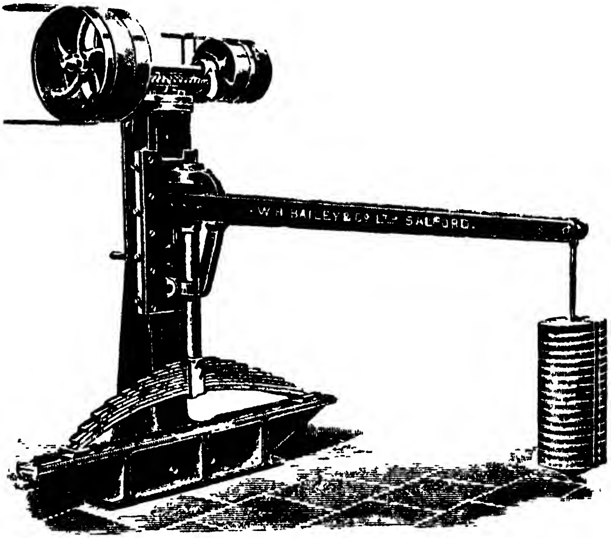

FIG. 363. THE BAILEY SPRING TESTING MACHINE

It has now become the practice to test every spring before putting it into service, by measuring the deflection at a given load.

The machine, shown in Fig. 364, enables load-deflection tests of tension and compression springs to be carried out accurately and quickly. In this machine the load is applied by means of a hand wheel working through suitable gearing, a chain drive being provided to place the hand wheel at a convenient height for working.

The indication of the load is shown upon a steelyard, which is graduated up to the maximum capacity of 6000 lb. in 1 lb. subdivisions.

Springs up to 24 in. long can be tested in tension, whilst compression springs up to 12 in., free length, can be dealt with. A deflection and extension scale is provided; this is so arranged that the free length of the spring prior to the test may readily be obtained.

Machines have also been devised for testing springs with repeated loads, similar to those experienced in practice. This mode of testing springs is undoubtedly the more useful one, as it reveals the fatigue properties of the material and spring design qualities.

Fig. 365 illustrates a convenient repeated loading spring testing machine made by Messrs. Buckton & Co. This type is made in sizes for maximum loads of 12, 25, and 35 tons respectively, the corresponding movements of the reciprocating ram being 20 in., 22 in., and 22 in. respectively.

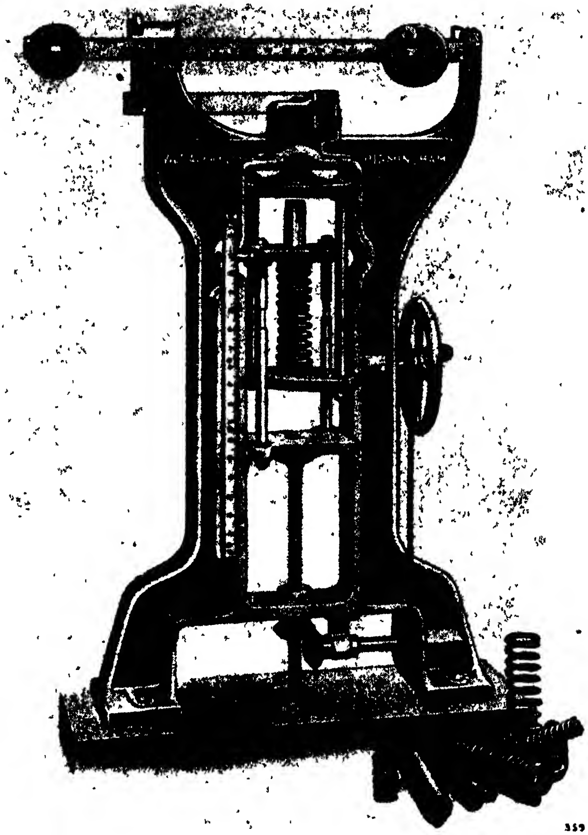

FIG. 364. THE AVERY TENSION AND COMPRESSION HELICAL SPRING TESTING MACHINE

The maximum lengths of laminated springs provided for are 99 in., 99 in., and 110 in. respectively, and the maximum heights are 30 in., 34 in., and 34 in. respectively. Coil springs can also be tested in these machines.

The load is applied to the spring by means of a powerful reciprocating ram, adjustable for position and length of stroke, actuated by a crank disc which is supported round the whole of its periphery.

This disc is driven by means of a worm wheel of large diameter and a case-hardened steel worm from self-contained belt pulleys, a heavy flywheel being employed in the larger machines. A friction brake is provided for quickly stopping the machine. The weighing arm is fitted with roller carriages for supporting the ends of the laminated springs, and is provided with a wedging mechanism by means of which its knife-edges may be relieved of the load during a repeated loading test. An indicator is provided for showing the exact length of stroke of the reciprocating ram.

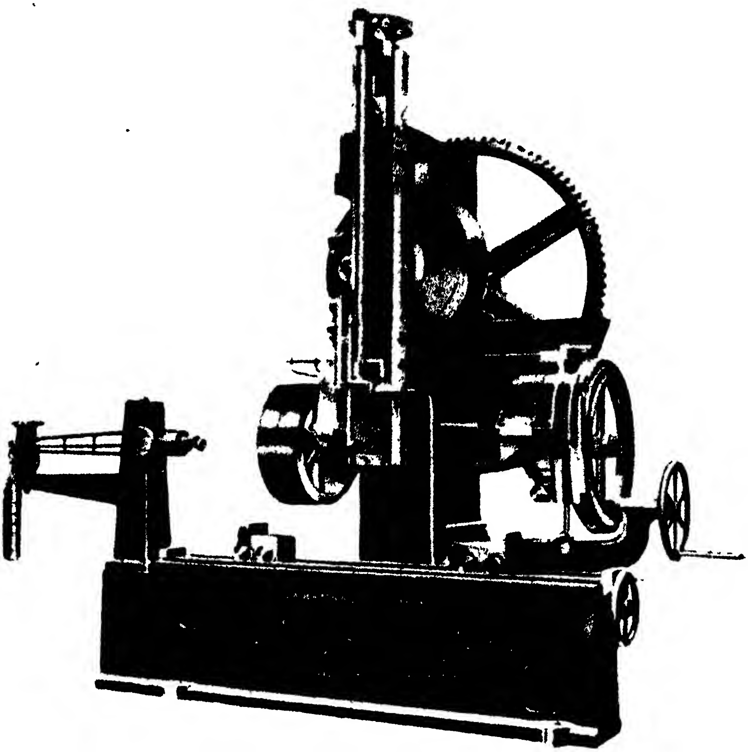

FIG. 365. THE BUCKTON VIBRATORY SPRING TESTING MACHINE

A convenient type of automobile spring tester is shown in Fig. 366. This machine has a maximum load capacity of 3 tons and can be operated either by hand or electric motor; in the latter case the load can also be reversed electrically. The hand wheel shown operates a screw ram, through suitable gearing. The downward movement of this ram can be stopped instantly at the attainment of the prescribed deflection by a switch controlled automatically by the screw. The final adjustment can be made by hand to allow for slight individual variations in the springs under test.

The machine will test laminated springs up to a deflected length of 6 ft.; it can also be used for coil springs up to 24 in. in length.

The ends of the laminated springs are arranged to rest in angle-pieces provided with rollers, so that there is no constraint in regard to end-movement.

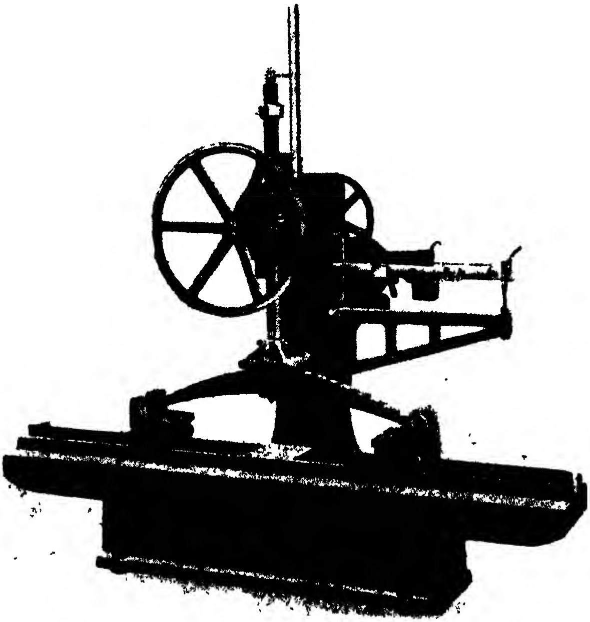

FIG. 366. A LAMINATED SPRING STATIC TESTING MACHINE

A pointer and scale (shown at the top) are attached to the machine to enable the deflection of the spring under load to be measured. This machine can also be supplied with a self-indicating dial for giving visible indications of the load applied.

A more elaborate testing machine for making vibratory tests in addition to load-deflection tests is also made by Messrs. W. & T. Avery, Ltd. (Fig. 367). This machine has been designed for testing coil and laminated springs to the requirements of the British Standard Specification No. 24, Part 3—1932.

This has a hydraulic ram for applying steady or fluctuating loads —by means of the motor-driven variable capacity pump shown on the left (Fig. 367); a hand wheel on the pump is used to produce the slow movement required for steady load tests.

The load records are obtained through the medium of weighing levers and a steelyard, the pressure upon the spring being applied by means of the double-acting hydraulic cylinder and ram previously mentioned.

This machine will deal with laminated springs up to 9 ft. in length; as in the case of the other Avery machine described, the ends of the springs rest in roller trolleys running on machined tracks. Coil springs up to 14 in. to 19 in. diameter by 30 in. in length can be tested on this machine; for this purpose they are seated on a machined platen in the centre of the platform.

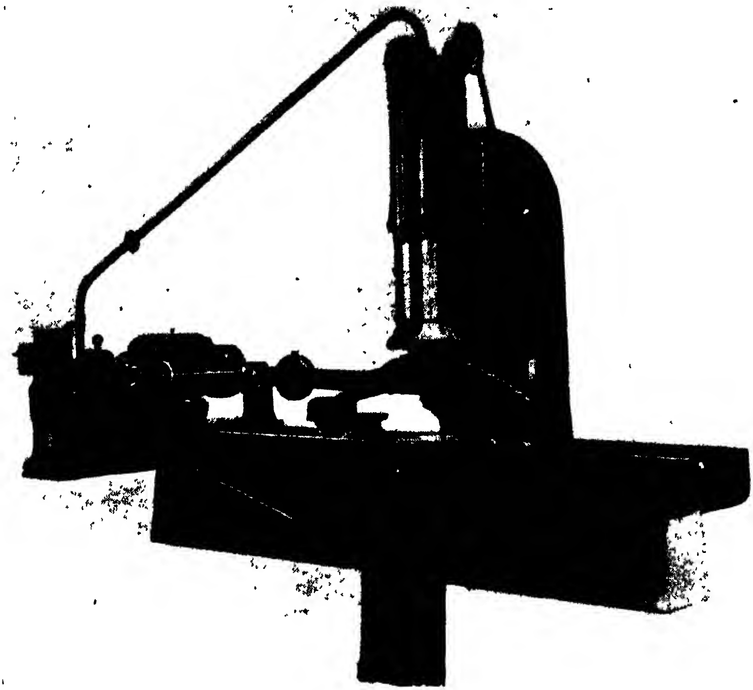

FIG. 367. THE AVERY LAMINATED SPRING TESTING MACHINE

This type of machine is made in capacities of 10 tons to 40 tons.

Tests upon laminated springs for load and deflection under steady static conditions can also be carried out on the universal-type tensile testing machines, using the same arrangement—or accessories—as for transverse beam tests, as shown in Fig. 368.

Cement Testing Machine

Cements, such as Portland cement, are usually specified to pass certain tests in regard to chemical composition, specific gravity, fineness, time of setting, time of hardening, soundness, and tensile and compressive strength. The general requirements of Portland cement are given in the British Standard Specifications No. 12—1931 and No. 146—1932 (Revised).

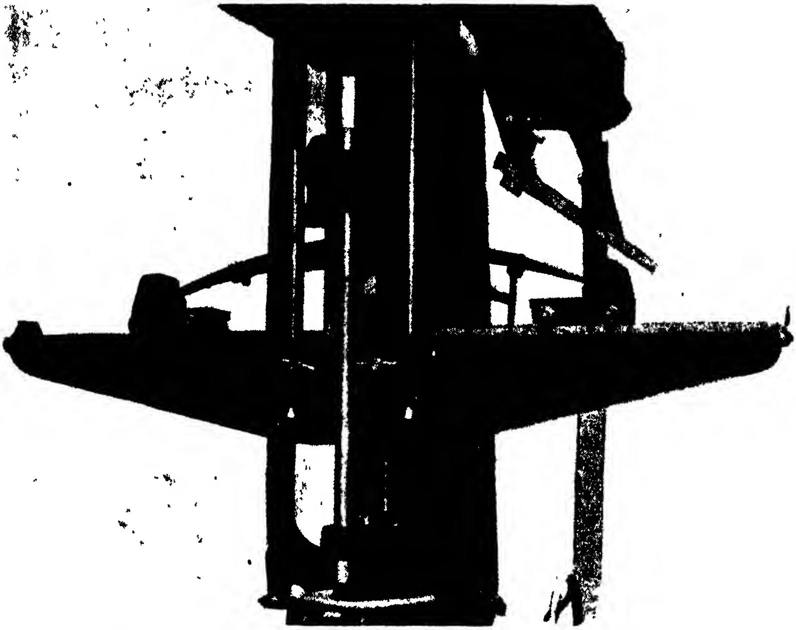

FIG. 368. USING AN ORDINARY TENSILE TESTING MACHINE TO TEST LAMINATED SPRINGS

In regard to compressive tests to failure, or crushing, these are usually made on 4 in. side cubes, and a universal type testing machine is required for this purpose.

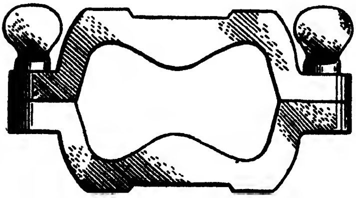

FIG. 369. GUNMETAL MOULD FOR CEMENT TEST PIECES

As the tensile strength is roughly proportional to the compressive strength it is usual to specify the former, since in addition its determination requires a much simpler and less expensive machine of the single or compound lever pattern. The briquettes used are of standard shape and dimensions and are moulded with flat faces in a gunmetal mould of the type shown in Fig. 369.

The tensile strength (B.S.S. No. 12—1931) of Portland cement, made up as a 3 : 1 sand mortar, should be not less than 300 lb. per sq. in. at three days and not less than 375 lb. per sq. in. at seven days.

Fig. 370 illustrates the Avery cement testing machine. The moulded test piece is held in specially-shaped shackles, the load being applied steadily through a compound lever system, by means of fine lead shot flowing into a receiver mounted at the end of the steelyard. This ensures an even rate of loading—which is essential for cement testing.

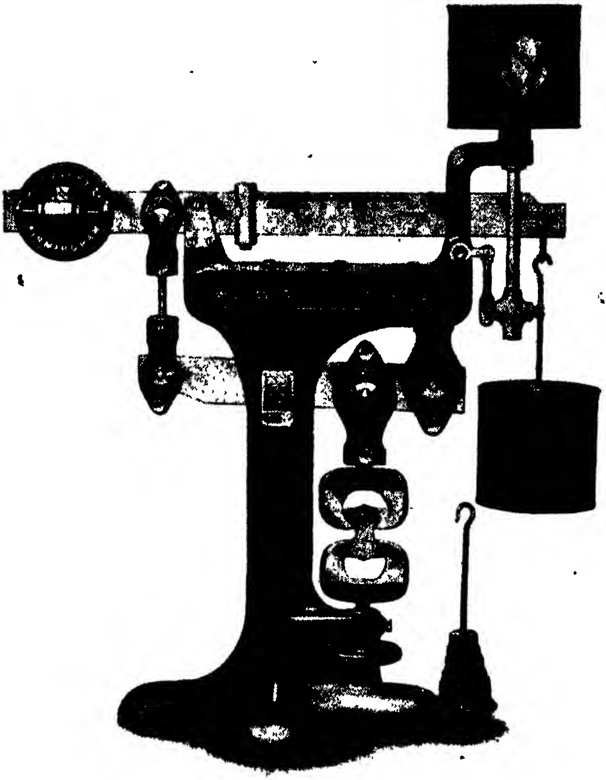
FIG. 370. CEMENT BLOCK TENSILE TESTING MACHINE

The flow of the shot is arranged so that the load is applied to the specimen at the uniform rate of 100 lb. in 12 secs., as required by the B.S. Specification. When the specimen fractures the shot from the upper fixed hopper (mounted on the frame of the machine) is cut off automatically by a trigger operated by the fall of the steelyard. The breaking strength of the specimen is computed from the weight of the shot, by unhooking the loading pan and suspending it from the other end of the steelyard. The pan is weighed on the steelyard, which gives the stress at which the specimen is fractured and thus obviates the need of a separate weighing machine.

Gunmetal grips are used to hold the specimen, and these are arranged to apply the load in correct alignment as required by the B.S. Specification. The machine has been designed to test specimens of 1 in. square sectional area to a maximum load of 1200 lb.

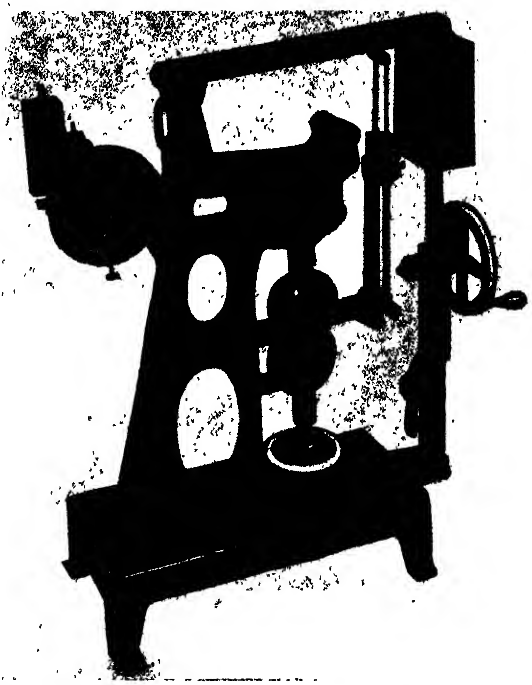

FIG. 371. THE OLSEN-BOYD CEMENT BLOCK TENSILE TESTING MACHINE

Instead of employing lead shot for loading the cement test piece, a weight having its motion hydraulically controlled may be used, as in the case of the Olsen-Boyd machine illustrated in Fig. 371. With this arrangement the tensile test load can be applied at any desired rate, e.g. 600 lb. per min. The machine shown has a maximum capacity of 1000 lb., but a larger model of 2000 lb. is also available.

The actual load at fracture is shown on the dial, and after the broken specimen is removed the pointer can be returned to zero by raising the plunger shown below the dial. Then the weight—on the extreme right—is raised quickly by means of the hand-wheel-operated rack and pinion gear on the right; when raised to the zero load position it latches into position ready for the next test. The machine is provided with suitable accessories for making compression or transverse tests.

A compression testing machine for cements, with hydraulic loading of the specimen, is shown in Fig. 372. It is designed for testing the A.S.T.M. standard 2 in. side cubes of mortar and the 2 in. by 4 in. and 3 in. by 6 in. cement cylinders. The hydraulic pressure is provided by a motor-driven pump within the body of the machine, and the weighing system is independent of the straining system. The load is indicated on two 16 in. diameter dials of full and one-fifth capacities, respectively. The weighing capsule is at the top and the straining cylinder at the base; the total vertical movement provided is 3 in. The machine is fully protected against over-loading and over-travel by automatic cut-off devices. It is available in a range of capacities from 5000 to 100,000 lb.

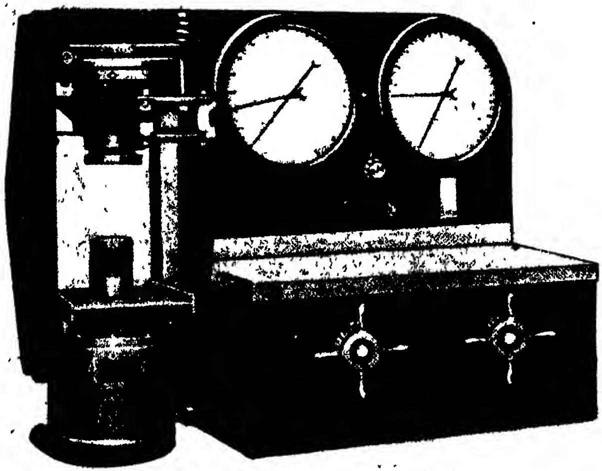

FIG. 372. THE OLSEN HYDRAULIC COMPRESSION TESTING MACHINE FOR CEMENT, ETC.

The Le Chatelier test for soundness of cement is made with cement paste of normal consistency using the moulding device shown in Fig. 373. This is placed on a small glass plate and filled with the paste, care being taken not to press the latter in too hard, so as to avoid forcing the edges apart. It is then covered with another small glass plate, a light weight being placed on top to keep the plate in position. The moulding device is then immersed in water for 24 hours. At the end of that time the distance between the needle points is measured and the mould again placed in water, which is heated until it is brought to the boil in 25 to 30 mins.; this boiling is continued for 3 hours. After cooling, the distance between the needle points is again measured, the difference between the two measurements representing the expansion of the cement. A sound cement should not expand more than 10 mm. as measured at the points. If the cement shows any increase on this it is not considered satisfactory. The moulding appliance shown in Fig. 373 is made of brass and has an internal diameter of 30 mm. and length of 30 mm.

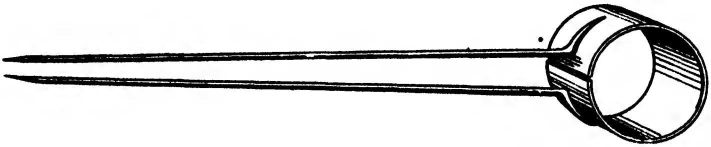

FIG. 373. MOULDING DEVICE FOR LE CHATELIER CEMENT TEST

Various other test appliances for measuring the normal consistency and setting time (Vicat apparatus), specific gravity, etc., of cement are made by testing machine manufacturers.

Fabric Testing Machines

For the purpose of making accurate tests upon cotton and woollen fabrics and similar materials it is necessary to apply the load at a given rate, and to know the value of the load and the extension of the specimen at any moment during the test.

The Avery testing machine, which is shown illustrated in Fig. 374, is very convenient for making tests upon fabrics of all kinds. In this machine lead shot is allowed to flow from the upper cylindrical receiver, supported on the fixed framing of the machine, into a receiver upon one end of the weighing arm. Gearing, hand operated, is provided for taking up the elongation of the specimen, and for balancing the load due to the falling shot.

The specimens accommodated in this machine can vary in length up to 28 in. or 30 in., and in width up to 6 in.; they are held in corrugated gunmetal clamps* by means of two milled clamping screws, and a universal joint is provided between the upper clamp and the weighing arm lever.

The weighing system consists of a main lever and a steelyard, both of which are of mild steel, fitted with bearings carried on the main standard.

The steelyard is graduated at both back and front. The front graduations range from zero up to 200-lb. by 1-lb. divisions. The

---

* See Fig. 311, p. 417.

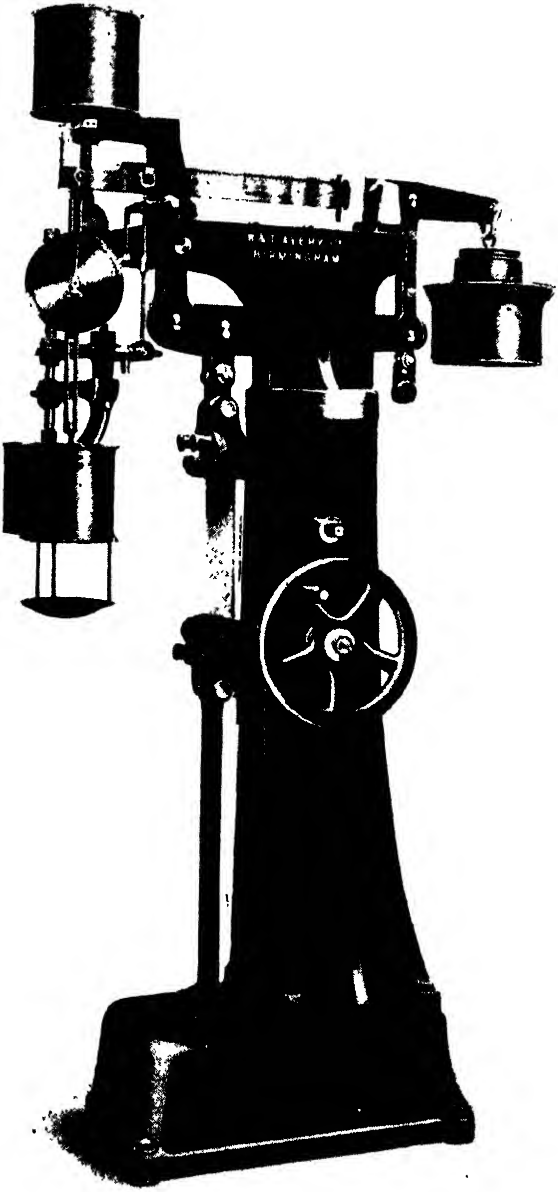

FIG. 374. THE AVERY TEXTILE MATERIAL TESTING MACHINE

graduations at the back of the steelyard range from zero up to 40-lb. by $\frac{1}{8}$-lb. divisions. The front graduations are for use when the machine is arranged with compound levers.

When more exact readings are required for smaller specimens, the weighing system is turned round upon the standard so as to bring the rear knife-edge of the steelyard directly over the specimen. The steelyard then acts as a single lever, and the back graduations are used.

The end of the steelyard is fitted with a hardened steel knife-edge, from which a receiver can be suspended.

A spring balance is interposed between the receiver and the steelyard, the dial of which is graduated to the maximum load—i.e. up to 1200 lb., by divisions of 5 lb., and 240 lb. by subdivisions of 1 lb., respectively. This enables the operator to read the approximate load on the specimen during the test. An upper reservoir is carried by the main standard, and fine shot is allowed to flow from this to the receiver. A graduated slide is inserted in the down tube to the reservoir, and is arranged to regulate the rate of flow of shot, so that the load is applied to the specimen at 500 lb. per min., or as required.

A cut-off arrangement is provided by which the flow of shot is automatically cut off when the specimen breaks. This is operated by the steelyard when it falls to the bottom of the carrier. A baffle arrangement is also fitted to a bracket attached to the main frame. This diverts the flow of shot into a supplementary receiver at the side of the machine, whilst the steelyard is falling from its horizontal position towards the bottom of the carrier, thus preventing any increase of the strain until the steelyard is raised by taking up the elongation with the handle.

The baffle consists of a swinging portion, pivoted upon a bracket attached to the standard and balanced in either direction. A connecting-rod between the steelyard and the baffle causes the latter to swing with the rise and fall of the steelyard, thus diverting the flow of the shot over the dividing ridge of the fixed baffle either into the weighing or the supplementary receiver. When the steelyard reaches the bottom of the carrier, the cut-off arrangement is operated, completely shutting off the shot supply.

The object of the stretch balancing gearing is to enable the operator to take up the elongation of the specimen as the strain increases, so that the weighing system is kept in equilibrium.

It consists of a hand wheel gearing through bevel wheels and change gearing to a rotating nut which moves the straining screw in either direction. Two spindles are fitted, and the hand wheel can be fixed to either at will. A set of change wheels giving six different speeds is provided, the maximum and minimum being in the ratio of 36 to 1.

The method of making a test is as follows: The specimen being connected to the holders, the shot is allowed to flow from the reservoir into the receiver, and the elongation taken up with one of the changes of gear, thus keeping the steelyard floating index midway in the carrier. For low capacities a quick speed is used for the strain, and the weighing apparatus is turned round, so that the steelyard can be used as a *single lever*. The maximum load in this arrangement is 240 lb. For high capacities a slow speed is used, and the main lever and steelyard are compounded.

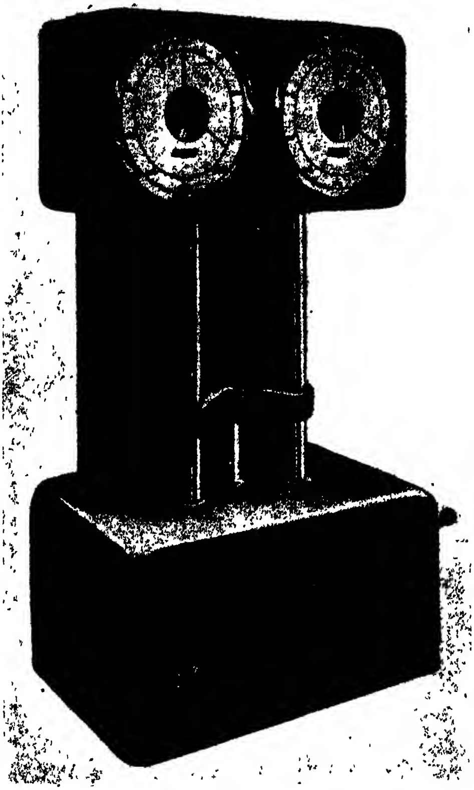

FIG. 375. THE AVERY DIAL TYPE FABRIC TESTING MACHINE

When the specimen has broken, the receiver containing the shot is emptied into the can suspended from the link hanging from the rear knife-edge of the steelyard, and there balanced by means of the loose proportional weights and the sliding poise.

A more recent development in textile testing machines is illustrated in Fig. 375, which shows the Avery A.1310 machine, embodying a number of special features to ensure accuracy and freedom from personal error effects.

It is generally agreed that the most desirable form of tensile test for fabric is one which provides a constant rate of loading, and it has hitherto been possible to carry out tests under these conditions only by relying on manual control for varying the rate of strain in order to achieve constant rate of loading. The machine shown in Fig. 375 provides automatic constant rate of loading without the intervention of the operator. Ten pre-determined rates of loading can be set and a special vernier allows intermediate settings between the pre-set steps to be made.

The machine has two dials. That on the left indicates the load and the loose pointer travelling round the chart with the load pointer remains at the maximum load applied to the specimen after the load is removed. After the machine is set into operation, the mechanism varies, automatically, the rate of straining to provide constant rate of loading without any action on the part of the operator. In the machine described the chart capacity is 500 lb., and the rate of loading varies from 50 lb. per min. to 500 lb. per min.

The right-hand dial is the extensometer indicator. It gives direct readings of the differential movements between the grips, the chart also being graduated to show the percentage of elongation. A special feature is the control of the loose pointer on the extensometer which allows the operator to make an instantaneous record of the extension at the time of the failure of the specimen. In the case of those fabrics where failure is prolonged, the operator may watch the specimen and take the extensometer reading at the time when the first fibres fail. Alternatively, in the case of materials such as duck, an instantaneous record can be obtained at some pre-determined loading below the breaking load.

The fabric holding grips are of unique design, as the upper and lower faces are detached for the insertion of the specimen. They are quickly removed and a jig-mounting is provided which guarantees the alignment of the specimen and permits its insertion with the greatest possible ease without any risk of creases or distortion. The jig has an illuminated platform with projected slits of light at the boundaries of 2 in. and 4 in. specimens. These slits considerably facilitate the alignment of the specimen, as the light is clearly visible through the frayed edge. Provision is made for inserting the specimen under a pre-set tension, and a duplicate set of grips enables successive specimens to be inserted in readiness during a test.

Tool Steel Testing Machine

The desirable qualities of a good tool steel include its durability at various speeds, suitability for different duties, ability to withstand

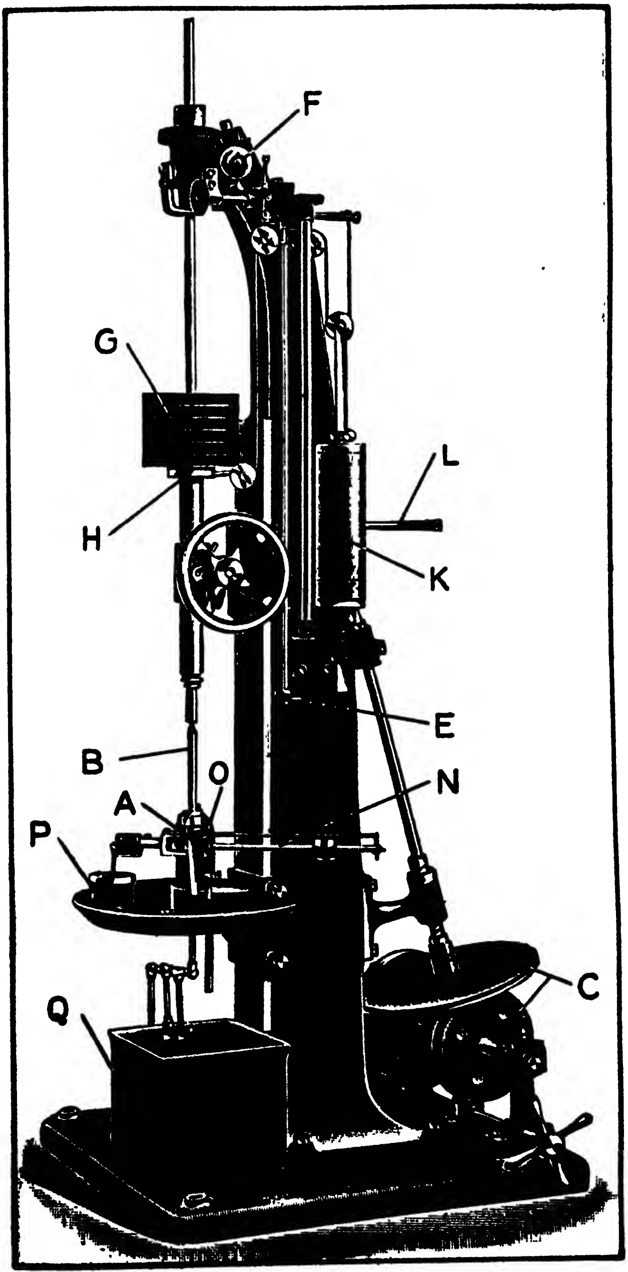

FIG. 376. THE HERBERT AND FLETCHER TOOL STEEL TESTING MACHINE

fairly heavy cutting pressures without loss of cutting edge, and ability to withstand a certain temperature rise without deteriorating.

Tests on tool steels are designed to elicit information on these points, more particularly in connection with their durability, correct cutting speeds, best cutting angles, proper methods of hardening them, and the best cutting compounds to employ.

Fig. 376 illustrates the Herbert and Fletcher tool steel testing machine for testing the cutting efficiency of tool steel. It has been designed to elicit most of the above-mentioned information.

The durability of tool steel is measured by the number of inches it will turn from a standard test tube of tough steel before the cutting edge becomes worn by a definite amount. The machine is fitted with variable speed gear, giving a wide and continuous range of speeds.

The speed is indicated by a graduated pendulum working in conjunction with a bell which rings once for every ten revolutions of the spindle.

The wear of the tool is measured, while the test is in progress, by a micrometer attachment. The results of all tests are autographically recorded.

In addition to testing tool steel the machine can be used for making drill tests for hardness of materials.

Referring to Fig. 376, the sample of steel to be tested is made into a cutting tool as shown. The cutting angle is 80°. This tool is held in a vice at *A* (Fig. 376). The test tube *B* is driven by a spindle and supported close to the tool by means of a steel bush. The spindle receives its motion through the variable speed gear *C*, consisting of belt cone and friction gears.

The speed of the machine can be accurately adjusted to any cutting speed from 20 ft. to 200 ft. per min. by means of a speed pendulum consisting of a bob attached to a graduated steel tape. The pendulum is drawn out to a length (indicated on a table supplied with the machine) corresponding to the cutting speed desired, and is set swinging. By turning the handle *E*, the bell *F* is set ringing at the rate of one ring for every 10 revolutions of the spindle. The speed of the machine is adjusted by gear *C* until the ring of the bell coincides with the swing of the pendulum. The test tube is then running at the correct cutting speed.

The feed of the test tube is effected by weight *G* resting on the spindle sleeve. The rate of movement of the weight and spindle is regulated by nut *H* on the feed screw. The feed used for all standard tests is 1·2 in. per 1000 revolutions of the tube.

The autographic record is made on the drum *K* (geared from the spindle) by pencil *L* connected to the spindle sleeve by a fine chain. The combined movements of the drum and pencil result in a diagonal line traced on the diagram sheet. This line measures, in a horizontal direction, the number of revolutions made by the spindle, and, in a vertical direction, the number of inches of tube turned away by the tool. Thin diagonal lines are printed on the diagram sheet, each one corresponding to a cutting speed.

The blunting of the tool is measured by a micrometer in conjunction with the beam *N*, which is mounted on knife-edges at *O* and carries a hard steel ball in a socket situated immediately below the edge of the test tube. The oil dash pot *P* serves to steady the beam.

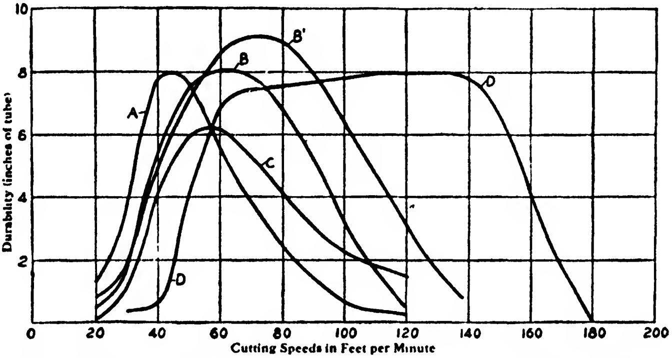

FIG. 377. SOME TYPICAL TOOL STEEL PERFORMANCE CURVES

For a test the machine is put in motion, its speed adjusted, and the cut started. The beam is adjusted so that the ball touches the end of the test tube just behind the cutting tool, and the position of the beam is noted on the dial attached to the micrometer screw, the setting of the micrometer being facilitated by an electric contact indicator. The pencil is set at the foot of the diagonal line corresponding to the cutting speed, and travels up it as the tube is turned away. As the test proceeds the edge of the tool is worn away, and the end of the tube descends through a distance equal to the wear or bluntness of the tool. The steel ball being in contact with the tube is depressed by a corresponding amount, and this movement, equal in amount to the wear of the tool, is communicated to the beam and measured by the micrometer. When the tool has been blunted by a predetermined amount, the test is stopped, and the vertical height of the diagram line shows the length of the tube turned away and measures the durability of the tool.

Steels which on the testing machine show a high durability at low speeds are most suitable for cutting operations which do not generate much heat, such as light cuts at low and moderate speeds.

Thus, steel *A*, Fig. 377, would stand up well under finishing cuts at moderate speeds, but would be useless for high speeds or very heavy cuts. Steel *D* would not keep its edge under a light cut (except at a very high speed) but would be very durable in heavy or high-speed cutting.

Most tool steels have low durability, i.e. are quickly blunted, at very low cutting temperatures, 100° C. and under, but such low cutting temperatures are exceptional in workshop practice. They can only occur when there is a combination of very light cut and very low speed, especially when the tool is artificially cooled. The blunting effect of a light scraping cut at a low speed is well known, but in all normal metal cutting operations, even when artificial cooling is employed, the edge of the tool is considerably heated, and this condition of low durability does not occur. Taking a cut of 0·0012 in. at 20 ft. per min. with water (the cutting edge being almost cold) one tool had a durability of 1 in. Cutting under the same conditions but without water and therefore at a higher temperature, the same tool had a durability of 12½ times as great. A like effect is produced when hot water is substituted for cold.

Too high a cutting temperature is, of course, equally detrimental to the tool, but this will naturally depend upon the type of cutting steel or alloy used. Cutting dry at 80 ft., a certain tool had a durability of ½ in. only, the cutting temperature being too high. When cooled with water the same tool cutting at the same speed had its durability increased to 19½ in.

Thus the speed curve shows at a glance the characteristics of the steel in actual cutting and its suitability for any class of light or heavy work.

A File Testing Machine

File manufacturers who turn out very large quantities of files have felt the need of some convenient type of machine for making accurate comparative tests of samples taken from batches of files, based upon their cutting and endurance qualities. The machine illustrated in Fig. 378 is designed to test files automatically, and to draw performance curves showing the *work done* (expressed in cubic inches of material filed away), *sharpness* (as indicated by the rate of cutting), and *durability* (in number of strokes taken before the file ceases to cut).

The file is reciprocated against the end of a test bar, which is supported on rollers and is forced lengthwise against the file by means of a weight and chain, giving constant pressure. The bar is withdrawn during the back stroke. The diagram is made on a sheet of section paper wrapped round a drum, after the manner of a steam engine indicator. The drum is geared so as to revolve slightly with each stroke of the file, and a pencil connected with the test bar is moved across the paper as the bar is filed away.

Fig. 379 shows some typical test diagrams, to a reduced scale,

FIG. 378. THE HERBERT UNIVERSAL FILE TESTING MACHINE

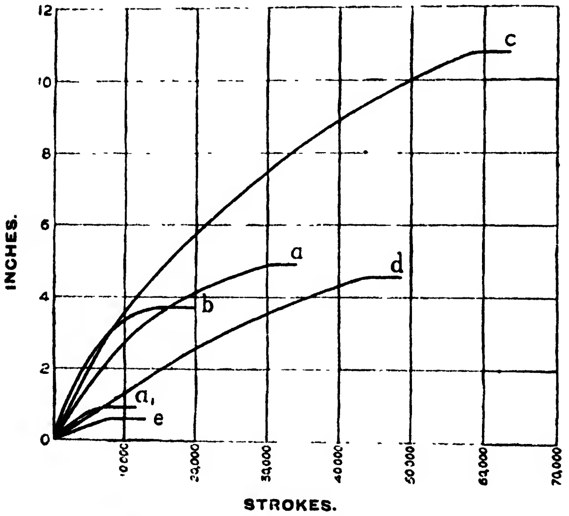

FIG. 379. SOME TYPICAL FILE TEST PERFORMANCE CURVES

obtained on the file testing machine in question. The vertical distances represent the number of inches filed away from a standard test bar of steel planed to a section of 1 in. by 1 in. Horizontal distances indicate the number of strokes made by the files. In each case the files were tested until they ceased to cut, as shown by the horizontal portion of the curve.

It should be noted that the slope of the curve at any point gives the rate of cutting at the corresponding period.

Referring to Fig. 379, curves a, a_1 are from two sides of the same file, and illustrate a difference which is quite frequently found to exist. Curve b is from a very efficient file, indicating correctly-formed teeth. It did a fair amount of work. Curve c is from a file much above the average judged by the speed of cutting and amount of steel filed away. Curve d shows a slow cutting file. Compared with b, it took four times as long to do 25 per cent more work. Curve e shows a bad file.

Bending Test Machine for Tool Steels

The principal requirements of steels intended for cutting tools are (*a*) great hardness of cutting edge; (*b*) great resistance to bending, so as to withstand the bending stresses under heavy cut conditions; and (*c*) great toughness, to obviate fracture under heavy overloads.

The hardness test gives a measure of item (*a*), whilst the elastic limit and tensile strength test is another indication of the hardness. The toughness qualities are given by impact tests. In order to ascertain the relative bending strengths of tool steels, special types of testing machine are required.

An interesting example is the machine used by Mr. O. Aqvist, director of Stridsberg and Björck, Trollhättan, for the purpose of finding suitable kinds of steel and methods of treatment for the manufacture of saws and knives at the works of that firm.* The machine was manufactured by the A. B. Alpha, Stockholm, and its construction and method of working will be seen from the diagram (Fig. 380). The test piece had a cross-section of 1·5 mm. by 5 mm. (say, 0·059 in. by 0·196 in.). The small dimensions were chosen partly in order that, in hardening, uniform cooling conditions should, as far as possible, prevail right through, so as to obtain the same structure in all parts of the sample, and partly for ease in taking test pieces from hardened objects.

The test piece A was laid upon fixed supports B and C, 20 mm. (0·78 in.) apart, and was deflected in the middle by means of a knife-edge D, which, through the two bars E and the two knife-edges F connected therewith, was loaded by pushing forward the movable weight G on the lever H, the latter being provided with a scale so that

---

* *Proc. Iron and Steel Inst.*, Stockolm, 1928.

the load on the test piece could be read off. The movable weight was actuated by a screw-bar driven by a motor, whereby the test piece was automatically loaded with a gradually increasing load and unloaded through the cam device *K*. Unloading took place after every increase of load of 4 kg. When fracture occurred the current was automatically cut off and the advance of the weight ceased.

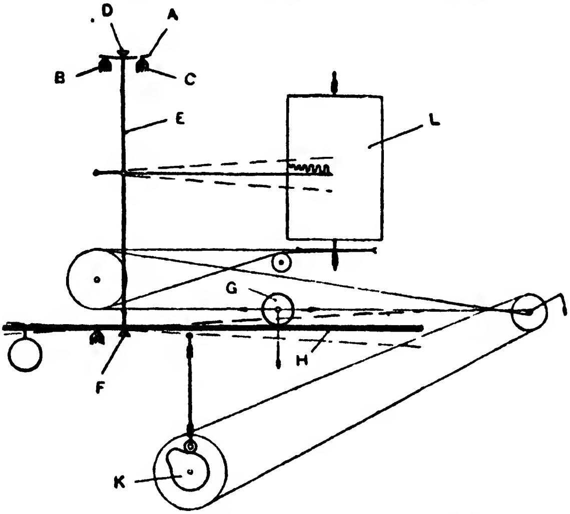

Fig. 380. Knife and Saw Blade Testing Machine

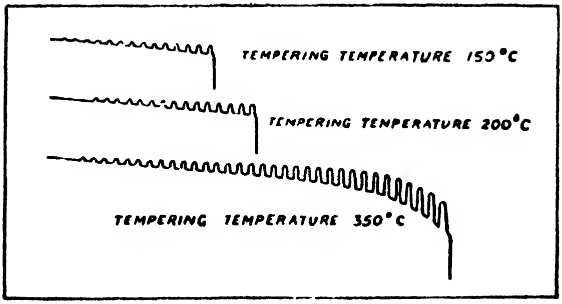

Fig. 381. Some Typical Test Diagrams for 1 per cent Carbon Steel (Hardened)

On the cylinder *L* the deformation due to loading and unloading was graphically recorded on a ten-times enlarged scale, the amount of the load being proportional to the movement of the diagram cylinder (1 kg. = 1 mm.). As an example, Fig. 381 shows the type of diagram given by a steel with 1 per cent carbon hardened and tempered at

150° C., 200° C., and 350° C. The test occupied 5 to 15 mins., after which the limits of proportionality and elasticity, the ultimate stress, and deflection could be read off on the diagram.

In this investigation the load causing a permanent deflection of 0·01 mm. has been taken as the elastic limit.

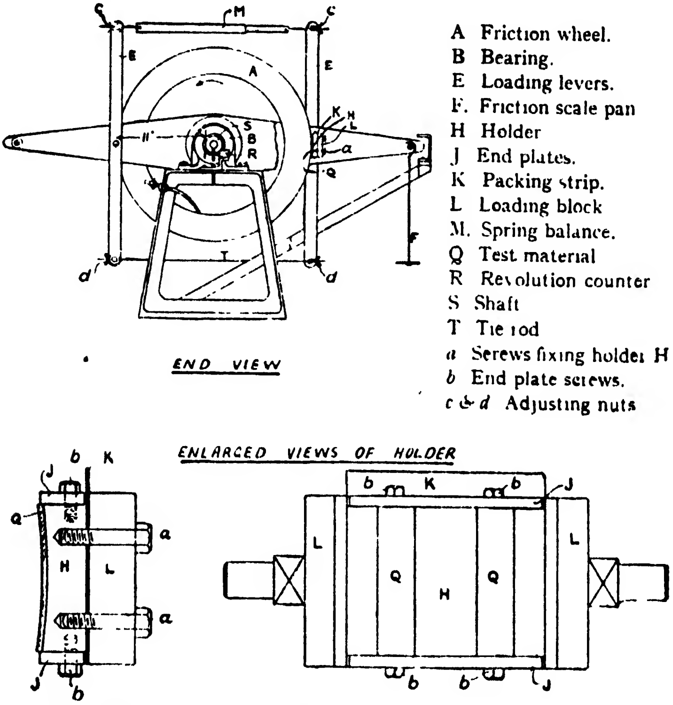

FIG. 382. THE N.P.L. FRICTION TESTING MACHINE FOR BRAKE LININGS, ETC.

Brake Lining Friction Testing Machines

In view of the importance of the subject of friction materials used for lining the shoes or bands of motor-car, colliery, and other types of brake, special machines are now in use for measuring not only the frictional coefficient, but also the wearing quality and temperature of the brake drum.

One of the earliest successful machines for this purpose was that designed by the writer for use in the engineering laboratory of the N.P.L., from which some interesting data were obtained. A later form of the N.P.L. testing machine is that shown in Fig. 382.*

The machine in question consisted of a cast iron friction wheel 2 ft.

---

* *Nat. Phys. Lab. Report,* 1926.

in diameter, upon which four pieces of similar material were pressed by means of the spring balance seen at the top of the machine and the link work shown. The test pieces were held in pairs in cast iron holders on opposite sides of the wheel. The whole loading device was supported on a frame mounted on ball bearings on the shaft, and the friction was measured by the torque applied to the frame to keep it in the horizontal position. The wheel was cooled by spraying water into the inside of the rim and allowing it to evaporate, thus maintaining the temperature of the surface between 90° C. and 100° C. The test strips measured 3 in. by ¾ in., so that a total area of 9 sq. in. was under test.

The machine was driven from a variable speed motor arranged to run at from 80 to 720 r.p.m. The wear was obtained by measuring the thickness of the strips after a certain time of running and was compared with the total work absorbed per square inch of surface. The work absorbed was obtained by observing the friction torque and speed throughout the run. After considerable experimental work, a standard wear test has been developed, which appears to give values for the wear comparable with those obtained under working conditions for the materials now in common use.

The conditions of this test are: Load, 13·3 lb. per sq. in.; speed, 720 r.p.m.; temperature, 90° C. (approx.); duration of test, 3 to 6 hours, according to the rate of wear. The wear is measured by the reduction of thickness in inches for the absorption of 1,000,000 foot-pounds of work per square inch of test surface. This figure is found to vary from 0·0035 in. to 0·0250 in. for different materials, the average value for a good bonded asbestos being 0·006 in. to 0·007 in.

Wear Resistance

The wear resistance of metals or finished metal parts is often measured in a practical manner by employing abrasives and sliding, rotating or rolling the specimen in contact with a hardened steel surface, upon which the abrasive is spread uniformly. Usually the specimen is of cylindrical form and is rolled, or rotated, in contact with a standard cylinder, dry or wet abrasive being fed between the surfaces.

Both the pressure between the surfaces and the speed are kept constant during the test. After a certain given period of running the specimen is removed, cleaned, and weighed; the difference between its initial and final weights is taken as a measure of its wearing properties.

Abrasion tests of this nature give, in relatively short periods, results corresponding to very lengthy periods under the actual conditions of employment of the objects in question. Ordinary journal, ball, and roller bearings, pins, and collar members have been tested in this manner.

Occasionally, with cylindrical specimens, instead of ascertaining the amount of wear by weighing the specimen, its diameter is measured accurately at several places before and after the test; the difference gives a measure of the wear.

Deductions from Wear Tests

The results of abrasion tests, made by various authorities using one or other of the methods outlined, show that although there is no really definite relation between the resistance to rolling abrasion and the ball hardness value, yet for most steels the two were approximately proportional to one another. Thus, the resistance to abrasion increases as the tensile strength and Brinell hardness, but there are many instances of a lack of regularity in the results; for example, in some cases the softer steels show less wear than the harder ones. Again, manganese steel is known actually to harden under pressure, and it has not been found to conform with ordinary materials in abrasion resistance, its value being considerably higher.

It is believed that the resistance to rolling abrasion is actually the resistance to disintegration of the already deformed material; this latter property has very little to do with the hardness or strength in the unstrained state.

In regard to the results of abrasion or wear tests the conditions under which wear takes place differ to a wide extent and for this reason it becomes difficult either to standardize or to correlate the results of wear tests by different methods.

One important factor is *the initial condition of the test specimen surfaces* as determined by the method of machining or finishing the surface. The results of precision surface contour measurements, such as those obtained by the Profilograph and other extremely accurate recording apparatus,* show that there are very wide variations in the surface contours of parts finished by modern machining, grinding, honing, lapping and other finishing methods. In the initial stages of abrasion tests the "hills" of these contours wear down much more rapidly than the plane material left after the complete contours are levelled, so that a minimum preliminary "running-in" period should precede the wear test one.

The structure of the metal as determined by the method of manufacture, e.g. casting, forging, hot- or cold-rolling and by any subsequent heat-treatment, also influences the rate of abrasion.

Another important factor is that of *lubrication of the wear test surfaces* as it is difficult to obtain a uniform degree of lubrication; moreover, the nature of the lubricant has an appreciable influence.

---

* *Vide Engineering Precision Measurements*, A. W. Judge (Chapman & Hall Ltd., London).

Under severe pressure conditions the state known as "boundary lubrication" may exist and since relatively minute amounts of grease or other lubricant tend to extend and cover the rubbing surfaces it is difficult in "dry" abrasion tests to ensure the absence of traces of lubricant, so that the results may not always be reliable indications of really dry wear conditions.

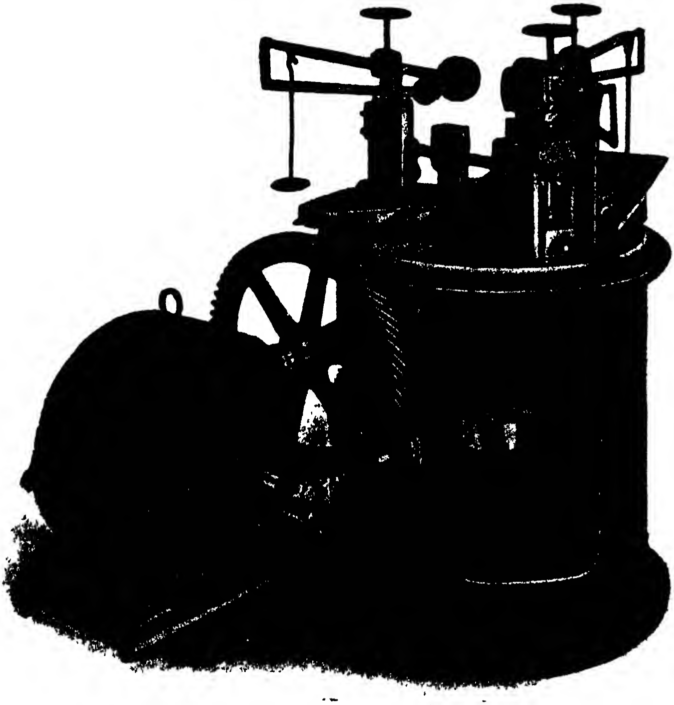

FIG. 383. OLSEN ABRASION TESTING MACHINE FOR MAKING WEAR TESTS ON THREE DIFFERENT SPECIMENS AT ONCE

It may be laid down that *each problem of wear resistance* must be considered on its own merits and the laboratory tests carefully arranged to provide similar conditions to those of actual service. The design of an abrasion testing machine, the nature of the tests carried out with it, and the size, shape and surface condition of the test pieces should therefore be chosen to simulate practical operating conditions.

Typical Abrasion Testing Machines

The abrasion testing machine, illustrated in Fig. 383, has been designed for steel and also non-ferrous metals. Provision is made for testing three different specimens under identical conditions of load, speed, and abrasive material. One of these specimens may be a standard one for comparison purposes.

Each specimen has its own load device, as indicated by the hand wheels and lever arms in the upper part of Fig. 383. The specimens bear on a flat circular disc that is rotated through gearing by an electric motor. As the table rotates the specimens are each given a gradual motion across the table in order to prevent grooves forming in the table. The material of the table is lead; the abrasive material—usually fine emery or carborundum—embeds itself into this and thus forms a lapping device or grinder.

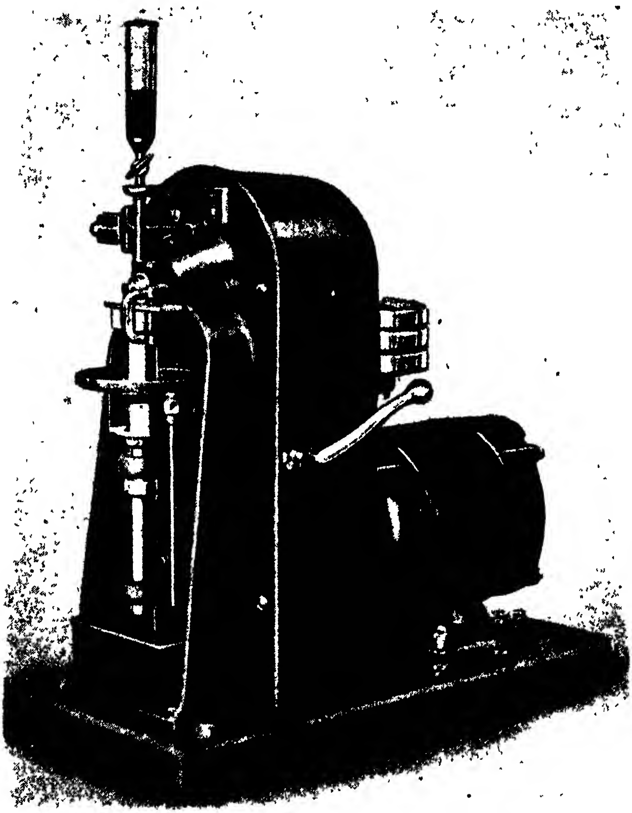

FIG. 384. THE AVERY-BROWNSDON WEAR AND LUBRICANT TESTING MACHINE

An arrangement is employed for feeding the abrasive material uniformly and to each specimen separately, so that the conditions for the test are the same in each case. A lever system with scale is also provided for each specimen to measure the wear automatically as the test proceeds; alternatively, the specimens may be weighed before and after the test.

The Avery-Brownsdon Wear and Lubricant Testing Machine

This machine is based upon the design of Dr. Brownsdon* and enables a range of tests relative to the lubricating values of oils and greases and the wear of metals under various conditions to be determined.

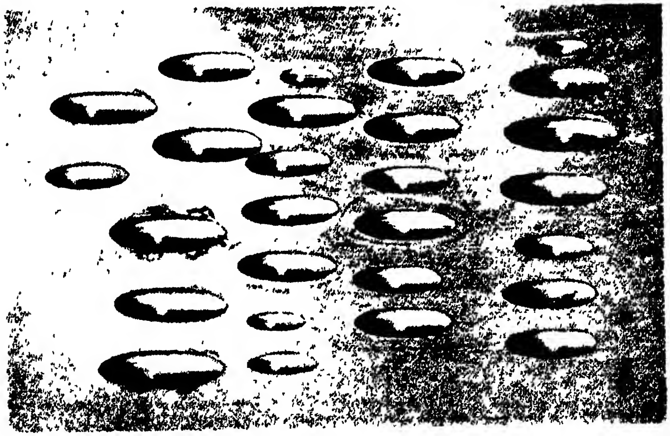

FIG. 385. TYPICAL WEAR TEST IMPRESSIONS FROM AVERY-BROWNSDON MACHINE

Speed, 500 r.p m. Load, 20 lb. Time, 15 min Temperature, 60° F. Metal, 70/30 brass. Wheel, steel, FF emery surface finish

The principle employed is somewhat similar to that of the indentation hardness testing machine, but instead of a fixed indenter it uses a rotating hardened steel wheel having a radiused periphery which is pressed on to the surface under test and produces an oval impression, the dimensions of which give a direct measure of wear (Fig. 385). The machine is designed to run at 500 r.p.m., and the loads vary from 5 to 30 lb.

The thickness of the metal sample is from $\frac{1}{8}$ to $\frac{5}{8}$ in. and it is in parallel face or plate form, suitable for clamping down to the machine table. The surface on which the test is carried out is finished with a grade of emery cloth similar to that used for polishing the indenting wheel. When testing lubricants, the wheel may be varied in roughness by finishing it with different grades of emery, from the smoothest OO to FF grades, or coarser still. In this connection unsuitable lubricants

---

* "Metallic Wear," *Journ. Inst. Metals*, March, 1936.

will show heavy wear on a given metal with the smoothest wheel with OO grade emery finish, whereas the best lubricants will not show signs of wear of the surface with coarser grades of emery finish.

The results of a series of tests with a mineral oil lubricant on steel, cast iron and two copper alloys, using different grades of surface finish on the indenting rotating steel wheel, are shown in Fig. 386. Tests may be carried out either with the metal surfaces lubricated or run dry. When experimenting with liquid lubricants the glass funnel-shaped reservoir (shown at the top of the machine in Fig. 384) is two-thirds filled, and the tap turned to give about one drop of oil per second. The stem of the glass funnel is then brought into fairly close contact with the top of the wheel, but not touching it, as this facilitates a continuous feed of oil to the wheel instead of a drop-by-drop feed. When the test is proceeding, the rate of oil feed is indicated by the rate at which it drops into the vessel at the base of the machine.

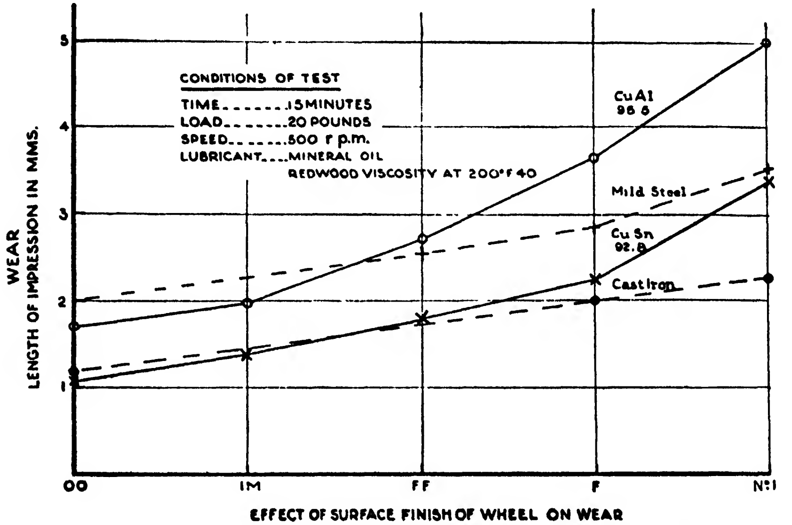

FIG. 386. TYPICAL RESULTS OF WEAR TESTS ON DIFFERENT METALS

Greases may be tested by smearing them on to the periphery of the wheel during the running of the test. The wheel is started in rotation by switching on the current. The handle is then pushed over to bring the sample of metal into rubbing contact with the rotating wheel. A stop watch is started, and after running for 15 minutes, the handle is pulled forward to remove the load by lowering the sample from the wheel.

In the detailed study of a wear problem a series of tests for increasing lengths of time is useful as the rate of wear as well as the time and load per unit area at which wear ceases can then be determined by plotting time against wear and dividing the load by the area of the impression.

At the end of the test the clamp is released and the sample removed. The length of the impression is measured with a Brinell or travelling microscope. The nature of the surface is also observed for signs of seizure.

A chart is provided showing the relationship of the length of the impression to area, volume and load per unit area.

The Amsler Abrasion Testing Machine

The Amsler machine illustrated in Fig. 387* enables tests to be made on the wear of metals under rolling or rubbing friction or a combination of both. In addition to uniform wearing action a pounding effect can be imposed during the tests.

The test pieces are in the form of two circular discs which roll circumferentially on one another. Rubbing friction can be introduced by so varying the relative diameters and rotational speeds of the discs that a certain amount of slip is caused between them. By stopping the rotation of one disc, complete rubbing is obtained. One disc can also be made to reciprocate axially relatively to the other, thus adding another frictional factor to the test. The pounding action is applied when required by an eccentric which lifts one disc slightly off the other, once during every revolution.

A small electric furnace can be placed over the test discs in order to investigate wear effects at temperatures up to 250° C., whilst lubrication can be supplied or withheld as required. The contact pressure between the discs is adjustable from zero up to 440 lb. (200 kg.).

A pendulum dynamometer in conjunction with an integrating mechanism measures automatically the total amount of abrasive work applied.

The amount of wear resulting is found by simply weighing the two discs before and after the run.

Machines for Testing Bearing Metals and Oils

Special testing machines for determining the relative and absolute frictional and wearing qualities of white metals, bearing metal alloys, and oils, are now in fairly wide use, and it is possible to ascertain the wearing, frictional, and heating properties of bearing materials with them, under different conditions of pressure and rubbing speed.

In the case of a bearing metal it is necessary that it shall be able to withstand high bearing pressures at high rubbing speeds with the minimum of wear, and shall possess as low a coefficient of friction as

---

* Bristol Aeroplane Company Test Laboratories.

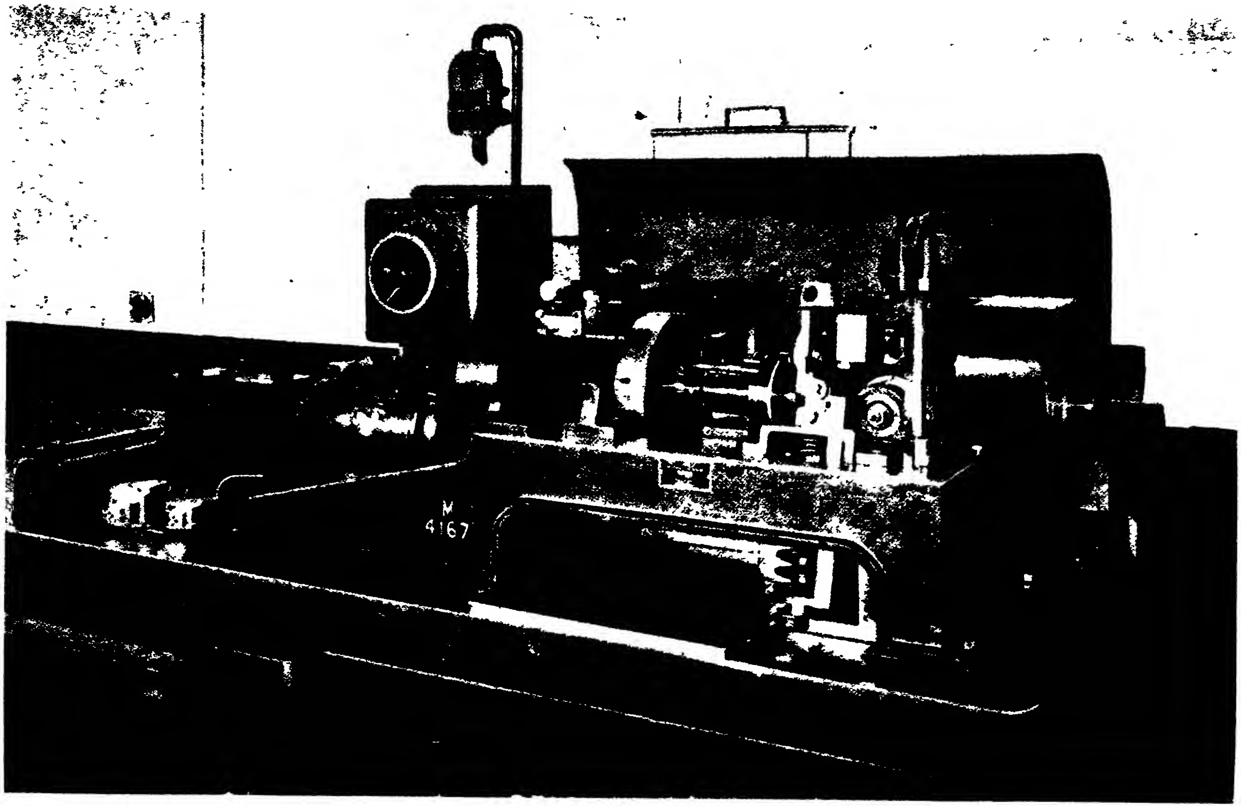

FIG. 387. THE AMSLER ABRASION TESTING MACHINE

possible; this latter condition ensures a minimum expenditure of power in overcoming bearing friction. It is also necessary that the heat conductivity of the material shall be high, in order to conduct away any heat that may be generated, apart from considerations of oil supply.

Fig. 388 illustrates a convenient form of testing machine designed

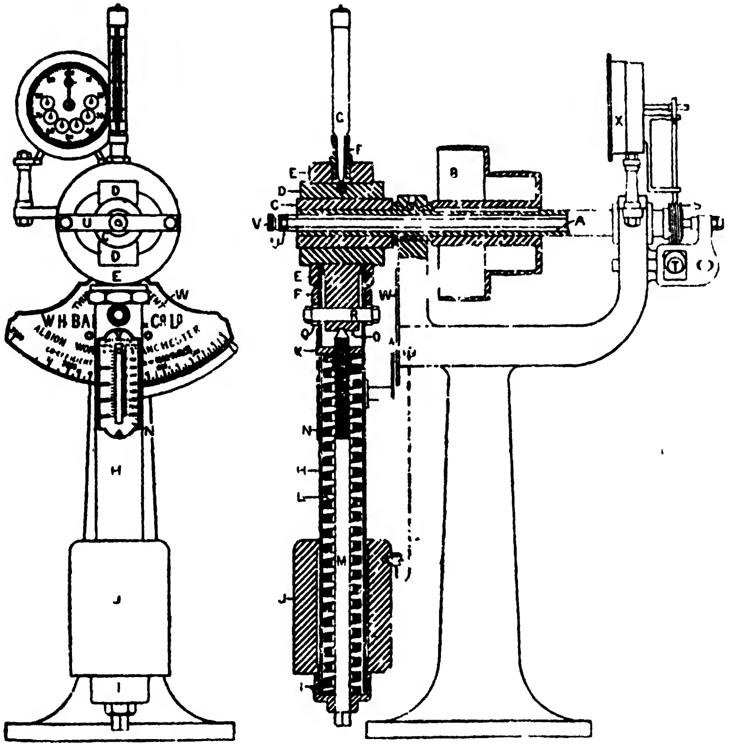

FIG. 388. THE BAILEY-THURSTON OIL AND BEARING METAL TESTING MACHINE

by Professor R. H. Thurston, and made by Sir W. H. Bailey & Co., Ltd. Referring to this illustration, it will be seen that the machine is of the pendulum type, the weight of the pendulum *HJ* coming upon a bearing of the material to be tested, an independent shaft *A* through the bearings being belt driven by means of the pulleys *B*. The bearings *C* are split through their centre, and pressure is applied to the brass caps *D* by means of the spiral compression spring *L*, the amount of the pressure being regulated by means of the nut *I*. It is arranged that equal pressure is applied to both sides of the bearing by making the lower end of the spring act on the pendulum casing and thence upon the upper bearing, whilst the upper end of the spring acts directly upon the lower bearing. An indicating scale N shows the total bearing pressure, and, for standard bearings, the pressure per square inch.

The effect of bearing friction, when the shaft is running, is to tend to carry the bearing and its pendulum attachment around with it, until the moment of the displaced pendulum weight equals the frictional moment.

Thus, if d = diameter of bearing in inches, P = total pressure on bearing in pounds, R = distance in inches of the C.G. of pendulum from the centre of bearing, W = weight of pendulum, and θ = arc of swing when shaft is running—

$$\text{then Moment of Friction} = \mu \,.\, P \,.\, \frac{d}{2} \text{ pounds-inches,}$$

$$\text{and Moment of Pendulum} = WR \sin\theta \text{ pounds-inches;}$$

$$\text{whence the Coefficient of Friction } \mu = \frac{2WR\sin\theta}{P\,.\,d.}.$$

The pendulum arc scale can then be graduated in terms of the coefficient of friction for a definite load P. In the machine described the coefficient of friction is equal to the arc scale reading divided by the total pressure (which can be read off the scale N).

The temperature rise of the bearing may be read off the thermometer G, the bulb of which is immersed in a mercury-filled recess in the bearing D.

The total number of revolutions and the rate of revolution made by the shaft can be read off a tachometer or speed indicator X.

In one form of Thurston tester a continuous record of the movement of the pendulum arc is made during a test, so that variations in the coefficient of friction can readily be followed. The rubbing speeds can be varied up to 736 ft. per min. In endurance tests it is usual to ascertain the variations of temperature and coefficient of friction during the period of the test, and to measure the amount of wear by weighing the bearings both before and after the test; in each case the bearings are well washed in petrol before weighing. In the Cornell* oil and bearing testing machine, the journal measures 3¾ in. diameter by 3½ in. long, giving 7 sq. in. projected area; a maximum load of 700 lb. per sq. in. can be applied, the total load being measured by a weighing arm and travelling jockey weight. The wear is ascertained after a run of one million revolutions at rubbing speeds up to 500 ft. per min.

---

* Made by Messrs. Tinius Olsen, of Philadelphia.

CHAPTER XIV

NON-DESTRUCTIVE METHODS OF TESTING

It is a disadvantage of most engineering material testing methods that the test piece or component is destroyed in the testing process so that it becomes necessary to employ test samples from the same batch of material as that used for making the parts or components to be used in service; the mechanical and physical properties of the actual parts are assumed to be the same as those of the test samples.

An exception to this statement is that of components tested by the ball or diamond indentation or rebound methods, where the depth of the impression made by the indenting tool is inappreciable and does not generally prevent the part from being used for its designed purpose.

It is, unfortunately, a fact that despite the careful attention given in the manufacturing processes and with the various precautions observed, faults or defects within and on the surfaces of materials do occur in the fabricated components employed in engineering machines, structures, etc. Moreover, in service—usually under severe conditions of complex loading and temperatures—stress or fatigue cracks are liable to occur and, unless detected in time, failure results.

It has therefore become necessary to institute methods of testing both the raw material used for making engineering parts and also the finished parts which will not affect the subsequent utility of these in the service for which they have been designed. Such methods, usually known as *non-destructive methods*, are now widely employed for works' routine inspection processes and are applied to all the material, part-finished and final-finished components.

Whilst the subject of engineering material inspection is somewhat outside the scope of the present considerations of material testing, which are largely concerned with methods involving the behaviour of materials under various conditions of loading, there are certain aspects of inspection systems with which those concerned with materials testing should be familiar, so that a short account of these is given in the present chapter; for fuller information the footnote references should be consulted.

Available Non-destructive Methods

In general these are based upon the application of tests involving the use of some physical property of the material under inspection, whereby the behaviour of the material or component is compared with that of a similar material, or part, known to be sound and therefore used as a standard of comparison.

Thus, in the case of a steel specimen having internal structural defects or surface cracks the magnetic properties of the faulty material are different from those of the sound material and can readily be detected. Similarly, the acoustical properties of faulty material are different from those of the sound material. Electrical and optical methods are also applicable to inspection methods.

Nature of Defects

The principal defects in engineering materials with which the user is chiefly concerned include—

(1) Those *originating during the manufacture and subsequent thermal and mechanical treatment* of the material itself. These include air or gas inclusions, slag inclusions, flaws, cracks, seams, overlaps, minute hair cracks, roaks, etc., which may occur in the casting or forging of the material.

(2) *Fatigue cracks*, which result from causes more fully described in Chapter VIII.

(3) *Grinding cracks* in the form of very small cracks of inappreciable depth on the surface due to incorrect selection of the abrasive wheel grade or to improper use of the grinding wheel. Such cracks if detected before the final sizing may be removed by fine honing or lapping. If left, they may become dangerous as "stress-raisers" in stressed members.

(4) *Hardening cracks* caused during the heat-treatment process, e.g. quenching, and due to local deformation as a result of unequal contraction in cooling. They are liable to occur with parts of intricate shape or in those having appreciable changes of section or sharp corners. In some instances small slag inclusions near the surface may cause hardening cracks, but generally they are the result of incorrect heat-treatment. Such cracks are of much greater depth than grinding ones, and if allowed to remain give rise to fatigue cracks under repeated loading conditions or increased local stress under plain loading ones.

Acoustical Crack Detection Methods

The principle of this method is that if a sound and an unsound metal part of identical shape, size, and material are struck with a metal object such as a hammer, the frequencies of the vibrations produced will be different, as indicated by the sounds emitted. Tapping the rims of railway carriage wheels to detect defective ones is an old established example of this principle.

The method, however, can only be regarded as a rough one, and if used the two metal parts should be supported in the same manner and struck at the same places.

A more recent improvement in acoustical crack detection which has been used for testing welded joints in structures utilizes a medical type of stethoscope. The probing end of the latter, fitted with a rubber cap, is placed against the welded joint whilst the adjoining weld metal is struck with a hammer. If the note emitted is of a high-pitched reedy nature this is taken to indicate a defective weld.

The acoustical method, using headphones, an electrical amplifier and an electromagnetic vibrator producing a characteristic "hum" which changes in intensity and pitch when the searching device approaches a defective weld which has been placed in a magnetic field, is also employed.*

In more recent American practice three different acoustical methods† are used in connection with the inspection of materials. These are as follows, namely: (1) vibrating the article being tested and checking the emitted tone against the tone of a standard specimen; (2) measuring the duration of sound given off by an article when in free vibration; (3) passing a supersonic wave through the piece to be tested and measuring the resulting reflection or absorption of the waves.

In *the first method*, standard specimens are set into vibration and their tones measured to determine the permissible range of tone frequencies. Each piece being tested is then similarly vibrated and its tone measured. Any appreciable difference in tone will indicate the presence of a flaw. This method is now in use by various industries for testing files, grinding-stones, and castings. These tests are made by the human ear, since these items are of such dimensions that the frequency of vibration is audible. When the frequency of vibration extends above the audible range, an instrument for making these sounds audible, called an audio heterodyne amplifier. is required. It consists of an amplifier in which is contained a local oscillator that beats with the incoming sound frequency to produce a "difference frequency" in the audio range.

The types of flaws which produce deviations from normal frequency in an article are cracks, changes in hardness, dimensions, and composition. Not all articles can be tested by this method. This test consists of vibrating the article by striking it on a hard surface, allowing it to vibrate freely and picking up and tabulating the sound frequencies. The tabulated frequencies are then analysed and the band widths established. Some band-width latitude is necessary because of small variations in dimensions in the articles.

Next, the production test instrument is constructed. It normally consists of an amplifier having a band-pass filter, a trigger tube, and an indicator. It will pick out any article which does not have the same

---

* J. Pfaffenburger, *A.E.G. Mitteilungen*, July, 1933.

† B. A. Andrews, *Electronics*, May, 1944.

vibration characteristics as the standard articles, regardless of whether the sound can be heard.

The second method of flaw detection involves measuring the duration of sound given off by an article when in free vibration. This system is now being used for testing glasses and goblets and for testing the bondage between two pieces of metal, as in steel-backed bronze bearings. In these applications the testing is all done by the ear, and the article is struck or dropped to produce vibrations. When an object is set into free vibration, the amplitudes of these vibrations decrease exponentially. A method of determining the specific damping capacity is by measuring the logarithmic decrement of vibration. This can be obtained by vibrating the object first at its natural frequency, then at frequencies on each side of the peak frequency, and noting the amplitudes. The apparatus required for this type of test includes an audio oscillator, a vibrator, an oscilloscope, and a vacuum-tube voltmeter. The standard specimens are first tested and the decrement noted.

The third method is that in which a *supersonic wave* is actually passed through the piece to be tested and the resultant reflection or absorption of waves measured. This method is more precise than the two previously mentioned systems, but is more involved and requires more complicated apparatus. The object being tested is mounted on a suitable support, and a quartz crystal is attached to one end of the test specimen. This crystal is connected to a high-frequency oscillator that is pulse-modulated by a low-frequency oscillator. A rochelle salt crystal for picking up the pulses is also attached to the specimen. This crystal is connected through an amplifier and rectifier to a cathode-ray oscilloscope for visual observation of the reflected waves travelling along the test specimen.

The test is conducted first on several standard specimens, and the reflected waves are noted on the oscilloscope screen. The pattern is a series of reflected pulses which occur at frequent regular intervals when the specimen is flawless. If a flaw exists, there will be in the pattern an extra pulse which is not obtained with a good specimen. If the specimen is a uniform bar, the distance between pulses in the train of reflected waves can be calculated. On specimens of non-uniform structure the reflected waves are compared with those of a standard specimen.

A variation of this method is as follows: A quartz crystal which is connected to a supersonic-frequency oscillator is submerged in a pool of oil. The crystal will send sound waves vertically upward in a beam. At the point where the beam hits the surface of the oil, a light ray is focused and is reflected on to a screen. The piece being tested is immersed in the oil and placed in the sound beam, and the variations in the intensity of the reflected light on the screen are used as an indication of the quality of the specimen being tested. This method has been used to inspect tyres immersed in a tank of water. Any change in the transmissibility of supersonic waves through the tyre as it is slowly revolved in the tank will indicate the presence of flaws.

An apparatus, developed at the National Physical Laboratory and known as a "noise meter,"* is an instrument of the microphone-amplifier type which has been adjusted for measuring the equivalent loudness of noise. It has been used in connection with gear tests for locating the pitch of the noise in running gears and enables the source or position to be found when the meshing frequency of the gears is known. It has also been used for testing squirrel-cage motors by noise analysis, and for timber testing to detect the presence of insect larvae.†

Hammering tests are used in the U.S.A. on steel castings for ships' hulls and anchors, on pipes, forgings, electrically-welded and forge-welded constructions. Repeated hammering tests are sometimes used to disclose high internal stresses in cylindrical parts, e.g. centrifugally cast cylinders. The stethoscope method‡§ is also used for testing welded tanks, pipes, vessels, etc.

Mention may also be made of *an acoustic strain gauge*|| for measuring surface strains produced both by static and dynamic loading. The apparatus consists of a test gauge, a reference gauge and a contro' set. The note from a vibrating wire in the test gauge is matched against the note from a similar wire vibrating in the reference gauge. The method of measurement is very sensitive and under normal conditions strains of the order of 1×10^{-6} can be recorded. The test gauge can be used in remote positions and controlled from a distance.

Magnetic Methods of Crack Detection

In this method, as applied to steel and iron parts, the presence of cracks and certain other defects depends upon the fact that the magnetic susceptibility of a fault is definitely much lower than that of the sound metal in the vicinity. Thus, if a crack exists which ends at, or very close to, the surface of the metal and the latter is subjected to a magnetic flux which is so arranged that its direction is perpendicular to the principal plane of the fault, the latter will act as a discontinuity

---

* A. H. Davis, "An Objective Noise Meter for the Measurement of Moderate and Loud, Steady and Impulsive Noises," *Journal I.E.E.*, 1938, vol. 83, p. 249.

† "Acoustic and General Methods of Non-destructive Testing," S. F. Dorey, *Proc. Inst. Electr. Engrs.*, 25th November, 1938.

‡ J. R. Dawson, "Stethoscopic Examination of Welded Products," *Symposium on Welding*, p. 81, published by the A.S.T.M. (1931). (Symposium available as separate publication.)

§ A. B. Kinzel, "Non-destructive Tests of Welds—Stethoscopic Method," *Welding Handbook*, published by the American Welding Society, 1938, p. 708.

|| "The Acoustic Strain Gauge," J. S. Jerrett. *Journ. of Scient. Insts.*, Feb. 1945.

or air gap, and there will be a distortion of the flux not only close to the fault but also to a diminishing degree around the latter and out through the surface into the surrounding air as indicated in Fig. 389. The amount and nature of the flux distortion will depend upon the size of the crack and of the object itself and the strength of the magnetic field. By increasing the latter the distortional effect can be extended much beyond the surface of the metal. It is the external or surface field distortion that renders the crack detection possible.

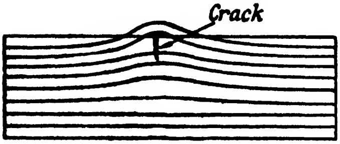

Fig. 389

Various methods have been suggested and used for detecting the surface field distortion. These include the exploration of the metal surface with a small pivoted bar magnet, the use of search coils of the static, vibrating or rotating types, the use of fine iron filings and "magnetic ink" or detecting liquid. Of these alternative methods that are now almost universally adopted in engineering inspection is the magnetic ink one.

The magnetic crack inspection method as employed for steel shafts is, briefly, as follows: The shaft, which should preferably be well-polished for the best results, is arranged to form the closing member of a closed iron circuit, such that the magnetic flux direction is parallel to the axis of the shaft. Direct current is generally applied to the electromagnetic coils of the magnetizing apparatus, so that if there are any surface cracks running peripherally (Fig. 390, upper diagram) the flux will be perpendicular to the crack plane. The strength of the flux is adjusted by suitable means to a predetermined value, a magnetizing current indicator being provided for showing the corresponding current strengths for different flux values.

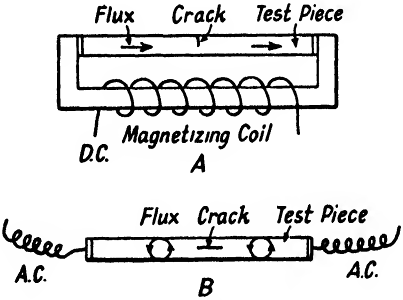

Fig. 390. Two Methods of Crack Detection

Usually, the most favourable field strengths are between 30 and 90 ampere turns per centimetre, but the actual value chosen must not exceed a certain maximum such that the magnetic powder and liquid adhere to the sound surface as well as to the cracks.

With the test piece in position the current is switched on for a short interval and then switched off, the residual magnetism being sufficient for crack indication purposes. The whole surface of the crack is then sprayed over with the "magnetic fluid," which consists of extremely fine soft iron particles of a spongy nature, held in a special hydrocarbon carrier fluid. The spongy iron particles contain a certain amount of air which reduces their specific gravity to a value similar to that of the fluid, thus enabling them to remain permanently in suspension. Previously, with ordinary fine iron particles it was necessary to agitate the solution before application.

The detector ink is now available in both black and red colours to suit polished and black or unmachined parts, respectively.

When the magnetic fluid is applied to the surface, it adheres to the crack (or cracks) since the iron particles migrate to this region of locally intense surface field or region of polarity across the edges of the crack. In this manner cracks which are too fine to be revealed by visual inspection—even with the aid of a magnifying lens—are at once shown up as black lines which indicate the lengths of the cracks in an unmistakable manner.

Typical examples of cracks revealed by this method are reproduced in Figs. 391 and 392.*

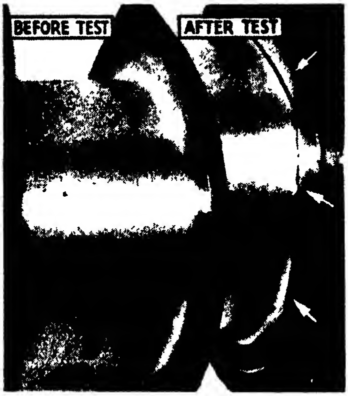

Fig. 391. Showing Cracks Detected in a Crankshaft by Magnetic Ink (Magnaflux Method)

In the case of black surfaces, the red magnetic fluid can be used or, alternatively, if the surface is given a thin coating of aluminium paint of a quick drying quality, the black fluid shows up effectively.

So far the method employed for transverse or peripheral cracks only has been mentioned. *For longitudinal cracks* the steel shaft must be magnetized in a circular manner, i.e. so that the direction of the magnetic flux is perpendicular to the axis or length of the shaft. This may be effected by *passing a current along the shaft*. Usually an alternating current is employed for the purpose, to produce concentric rings of magnetic flux lying at right angles to the length and therefore to any longitudinal cracks (Fig. 390, lower diagram). The magnetic fluid is then sprayed over the surface or flowed down the length of the shaft to reveal any longitudinal cracks, such as might be caused in rolling or drawing a shaft, tubes or wires. Instead of a magnetic fluid, an extremely fine magnetic powder can be used. This is blown or sifted on to the surface.

In cases where cracks or flaws are likely to occur in more than one plane the specimen under test can be magnetized both longitudinally

---

* Courtesy Equipment & Engineering Co. Ltd.

and circularly, simultaneously. This method is employed for inspecting spiral springs, such as those employed for petrol engines. The spiral magnetization effect reverses with each alternation of circular flux. Special plant for production testing of aircraft engine valve springs by this method is now available.

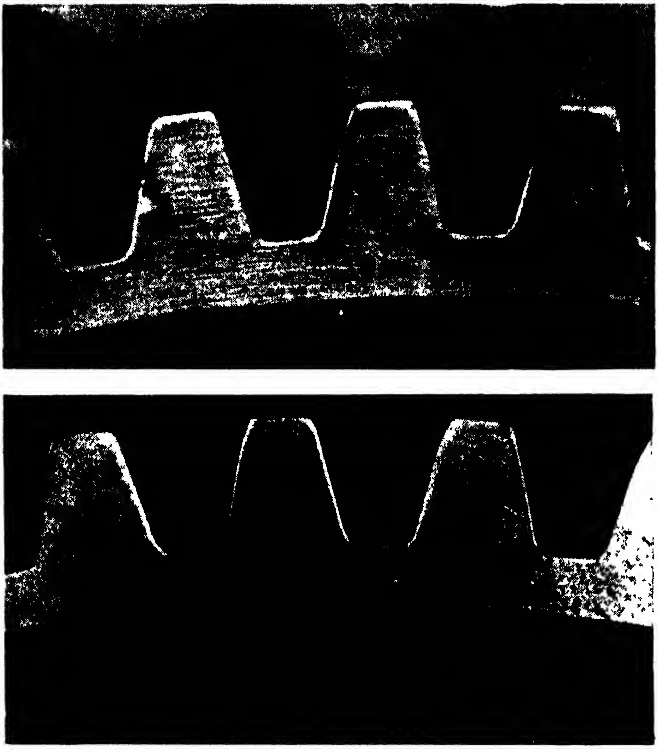

Fig. 392. Showing (above) Portion of Gear Wheel and (below) Cracks revealed by Magnetic Ink (Magnaflux Method)

Small steel parts may be magnetized longitudinally by means of *permanent magnets*. Advantages of this method are that the apparatus is readily portable and is independent of electrical supply (and cost of the latter). For some purposes the test apparatus can be built up wholly of permanent magnet parts. In these instances the dimensions and shape of the permanent magnet circuit must be such that on open circuit it will not become demagnetized below the BH_{max} point of the material from which the magnet is made. Further, the length of the permanent magnet must be proportional to that of the article it is required to magnetize and the cross-section must be ample to provide the necessary flux.

In regard to the matter of current supply for electrical flux-producing plant this may be either A.C. or D.C. The former source of supply is usually more convenient since it is easier to step the voltage up and down using stepped transformers. It is, however, possible to use an original A.C. source of supply, with a regulating transformer and rectifier to obtain D.C.

Demagnetizing Inspected Parts

Since steel and iron components retain a certain amount of magnetism after the inspection process described, for many purposes it is essential to demagnetize them. Residual magnetism also prevents easy removal of the part from the crack detection machine. This is quickly and conveniently effected by means of alternating current fed coils. In some instances the demagnetizer is arranged in the form of a flat surface platen, the part to be demagnetized being passed slowly over the surface (Fig. 393).

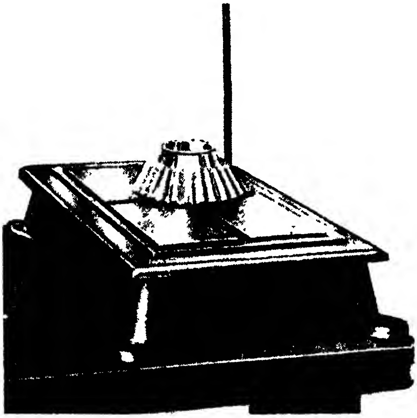

Fig. 393. Platen Type of Demagnetizer

The aperture type demagnetizer is, however, more convenient and rapid in use, it being necessary only to pass the magnetized part through the aperture whilst alternating current is passing through its coil or coils. Usually a switch and current or "live" red light indicator are provided with this pattern of demagnetizer. The current consumption ranges from about 1000 to 10,000 volt-amperes according to size, and the supply used is single phase. A typical aperture demagnetizer of aperture dimensions 18 in. by 18 in. would consume 30 amperes at 230 volts.

Two methods employed in the Magnaflux crack detectors for getting rid of the residual magnetism in steel components that have been inspected are those based on potentiometer and condenser control, respectively.

The potentiometer control method permits regulation of the magnetizing current to a fine degree *and its reversal* for removing the residual magnetism. The potentiometer also acts as a discharge resistance for the induced current in the magnetizing coil should the current be shut off accidentally whilst testing.

The condenser control method—which is used on all production models—utilizes the discharge of a special condenser to remove the residual magnetism and has the advantage of saving time by obviating the necessity for actuating the potentiometer.

Limitations of Magnetic Crack Detection Method

The magnetic method of crack detection by the use of magnetic powder (dry or in fluid) assumes that the structure of the metal is uniform and is independent of changes of microstructure caused by the results of heat-treatment processes or local internal stresses.

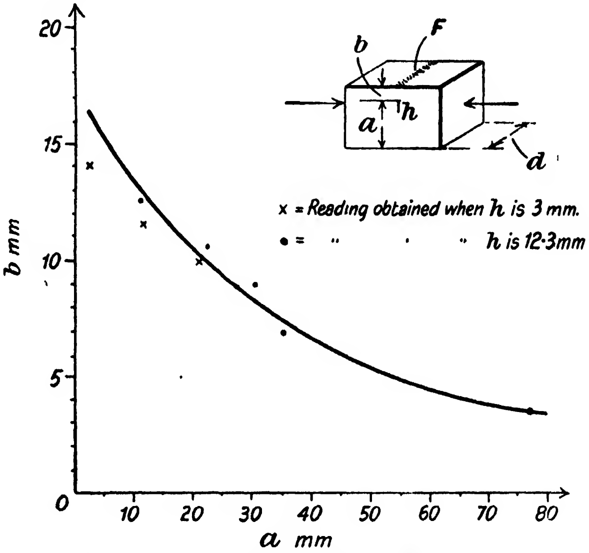

FIG. 394. SHOWING LIMITATIONS OF MAGNETIC CRACK DETECTION METHOD

Generally, however, as the magnetization is within the range of maximum permeability such effects are negligible so far as routine tests are concerned.

It can readily be shown that the sensitivity of the method depends upon the locality of the material defect, i.e. upon its proximity to the surface, or otherwise. The maximum results are obtained with flaws extending to the surface, the sensitivity diminishing with the distance beneath the surface. It is for this reason that the powder method of flaw detection is inapplicable to defects well below the surface.

In this connection mention may here be made of the results of some tests* that have been made on test pieces having cracks of the

---

* "Non-destructive Testing of Ferro-magnetic Materials," *Machinery*, 19th November, 1936.

same dimensions but at different distances below the surface. It was shown that the extent of the flaw had no appreciable influence on the accuracy of the observed results and, further, that the cross-sectional area of the part being tested, for a satisfactory magnetic field strength, did not affect the results.

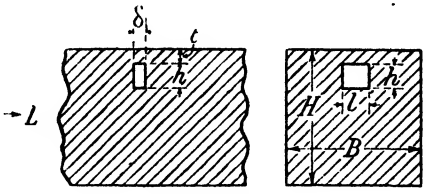

Fig. 395

It was, however, found that for a given flux density variation of the cross-section influences the sensitivity. Fig. 394 indicates the maximum depths *b* at which cracks can be detected in specimens of a total thickness (*a* + *b*), where *a* is the distance from the upper part of the crack to the lower surface of the test piece and *b* is the distance from the upper surface. The arrows show the direction of the magnetic flux, which was produced by an electromagnet of 20,000 ampere turns. The results shown by the graph indicate that the height *h* of the crack, which varied between 3 mm. and 12·3 mm., had no influence. In these tests the width of the crack was 0·1 mm., and in the diagram *F* represents the iron particles used for detection purposes, while *d* shows the width of the test piece. The physical principles of crack detection have been studied in some detail by R. Berthold* who has shown that in the case of a flaw of height *h* and width *l*, situated at a distance *t* below the surface in a rectangular bar of cross-sectional height *H* and depth *B* (Fig. 395), the maximum length of flaw that can be indicated in relation to current strength is as shown by the graph in Fig. 396. It will be seen that the sensitivity decreases for field strengths below about 50 ampere turns per cm. and also as the cross-sectional area of the crack becomes a smaller

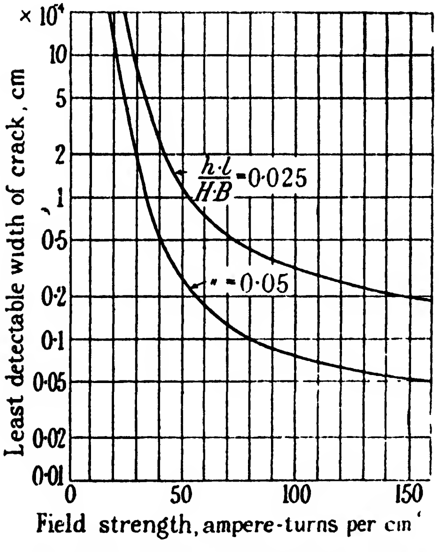

Fig. 396. The Maximum Width of a Flaw that can be Indicated in Relation to the Field Strength

Effect for a flaw 2·5 to 5 per cent of the cross-section; crack situated at the surface; length of filings 5×10^{-4} cm.

---

* *Reichs-Röntgenstelle*, Berlin. *Journ. I.E.E.*, 1938.

proportion of the total cross-sectional area of the test piece. It was also found that although this method was extremely sensitive for the detection of flaws at or near the surface the depth obtained, i.e. the ratio t/H, was very slight and rapidly diminished below 30 ampere turns per cm.; above 60 ampere turns per cm. it hardly increased; thus *the most favourable field strengths* were those between 30 and 90 ampere turns per cm.

The sensitivity also decreased as the width δ (Fig. 395) diminished. Thus, for a field strength of 50 ampere turns per cm. the least detectable weakening of cross-section for $\delta = 10^{-3}$ cm. was less than one half of the value for $\delta = 10^{-4}$ cm.

Crack Detection in Non-magnetic Materials

As the magnetic method of crack detection cannot be applied to materials that are incapable of being magnetized, e.g. non-ferrous metals, alternative methods have had to be devised.

The earliest method employed in engineering workshops for detecting cracks in metals was to heat the metal part slightly and immerse it in a paraffin bath, after which it was removed and the paraffin wiped off with a cloth. It was then given a thin coating of whitewash and set aside for a period of several hours, during which the paraffin in any cracks present seeped out and stained the whitewash, thus showing their location and extent.

Surface defects in aluminium light alloy parts, such as coatings or forgings, that are invisible to the naked eye are exhibited after the surface has been protected against corrosion by the anodizing process and the parts washed. Any surface defects present are revealed as red or brown markings on the light background of the anodized surface. Mention may also be made of the fact that when steel parts are smooth machine finished, using paraffin as a lubricant, if these parts are left for a time exposed to the air *the surface darkens or tarnishes,* but if there are any superficial cracks these do not darken, due probably to the fact that the retained paraffin protects the metal against tarnishing action. The method appears to give good results* in the case of fine cracks.

The fluorescent method of crack detection is based upon the principle of immersing the component in a bath or spraying it with a liquid containing very fine particles of a substance having fluorescent properties under the activating influence of the invisible ultra-violet rays (sometimes referred to as "black light"). Upon removal from the bath the liquid is removed from the surface, leaving the cracks filled with the fluorescent particles. Upon exposure to a source of ultra-violet light the cracks are revealed as clearly defined green lines on a black background.

---

* L. Benson, *Journ. Inst. Electr. Engrs.*, 1939.

The practical method employed for routine inspection of both ferrous and non-ferrous components is illustrated by the "Glo-Crack" process* in which the parts to be inspected are immersed in a bath of fluorescent liquid for an automatically-controlled period at 75° C. After the set period they are withdrawn and washed in a solution which removes all of the fluorescent material from the surface, after which the components are inspected in a darkened room or cabinet under the ultra-violet rays from a "black" lamp. The method occupies only two or three minutes per article. The process described will not reveal mere scratches which have a depth equal to or less than their width. An advantage of this method is that the parts are degreased after they are immersed in the fluorescent solution; further, it is not necessary to employ expensive magnetizing apparatus nor to demagnetize the inspected parts.

Another method† employed in the routine inspection of parts for surface defects uses an immersion tank kept at 70° C. to 80° C., containing carbon tetrachloride, methylcyclohexanol, the fluorescent material and an inhibitor; the latter is ineffective in the presence of the methylcyclohexanol but is active in the vapour phase. The tank is provided with a condenser to enable the vapour rising from the heated contents of the tank to condense and return to the liquid in the tank. The parts to be inspected are loaded in trays and immersed for 30 to 40 secs. They are then raised and held in the vapour for 20 to 30 secs. in order to eliminate the overall fluorescence, leaving only the fluorescent material held in the cracks, since this is not acted on by the vapour of the inhibitor. The parts are then viewed by ultra-violet radiation in the usual manner. The fluorescent method is particularly useful for examining dark ferrous parts such as unmachined forgings and those finished by black processes.

Crack Detection Appliances

The principal components of modern magnetic crack detecting apparatus for works routine test purposes include the flux producing equipment, the work holder, control panel, demagnetizing means and magnetic powder or ink dispenser.

The electrical methods of flux production do not usually involve an appreciable energy consumption; from 100 to 300 watts appears to cover most works' requirements.

Fig. 397 illustrates a portable model crack detector designed for testing parts in position which, by reason of their size, cannot be placed on the pole pieces of stationary type crack detectors. It is

---

* Colloid Research Laboratories, London.

† "The Inspection of Metallic Materials." J. E. Garside, *The Engineer*, 23rd June, 1944.

suitable for testing horizontal and vertical plates and members of steel structures up to ½ in. thick. The outfit consists of a small hand crack detector with potentiometer control, provided with radial pole arms and terminating pole tips. Cable and a foot switch are supplied to allow the detector to be used at a distance from the controls. The electrical equipment includes the control gear, double-pole main switch and fuse, current or magnetism indicator and a red pilot warning lamp to indicate when the current is "on."

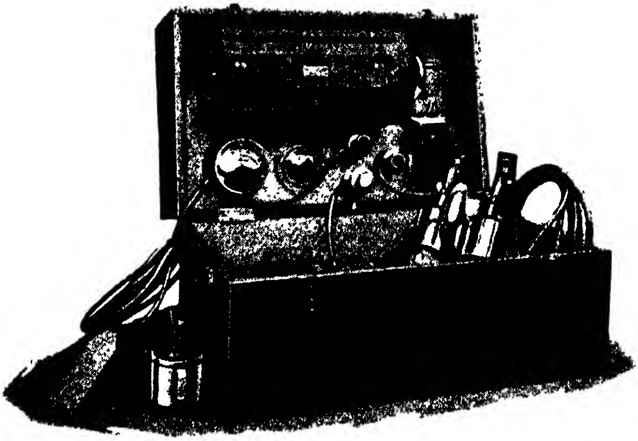

FIG. 397. THE MAGNAFLUX TYPE Q.B.I. PORTABLE CRACK DETECTOR

Fig. 398 shows the standard model Magnaflux crack detector, which is made in three different capacities for parts of 7 sq. in. by 30 in. length, 12 sq. in. by 62 in., and 19 sq. in. by 69 in., respectively.

The test piece is held in the pole-limb unit below, the pole pieces of which are moved by means of the handle on the right. It is used for detecting transverse cracks, the magnetic flux being in the direction of the length of the test piece. A duplex model is available for testing for cracks in two directions, namely, transverse and longitudinal.

The pole pieces between which the test pieces are placed have vee notches for testing long round parts such as crankshafts and camshafts, and are provided with laminated tips. Potentiometer control is provided and in two of the models a transportable control unit is supplied. This is connected to the crack detector by suitable cables enclosed in flexible metallic tubing; they can be placed in any position convenient to the operator.

A special form of crack detector for examining rolling stock axles and crankshafts is shown in Fig. 400; it is intended for use when the wheels are in position. The plant is arranged for installation in a pit so that the rollers are at a convenient height to allow the wheels and axles to move from the rails to the rollers. Locomotive crankshafts with outside crank pins can also be tested. Outside pins are tested with the pillars placed so that their inner ends almost touch the ends of the crank pins. Thus, the magnetism passes up the pillar and in at the pin, giving an axial flux direction.

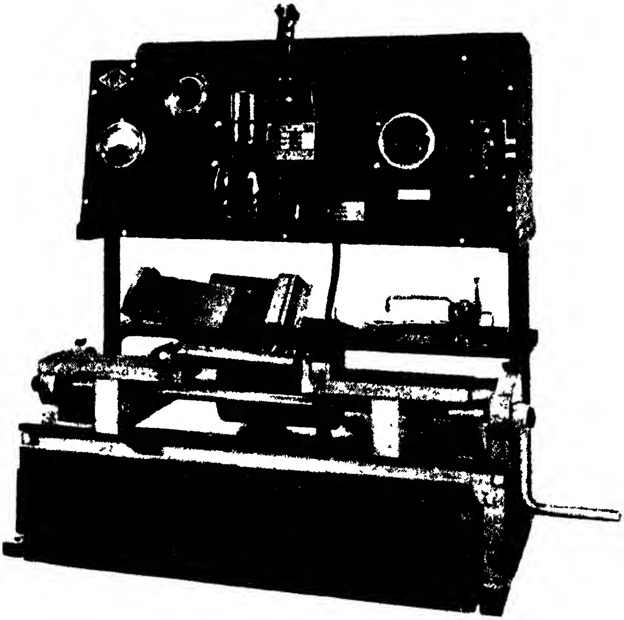

FIG. 398. STANDARD TYPE T.B.I. MAGNAFLUX CRACK DETECTION APPARATUS

In the Reynolds crack detecting equipment for the *inspection of welded steel tubular structures* (Figs. 401 and 402) provision is made for supplying two separate magnetic fields producing fluxes in directions mutually at right angles, i.e. longitudinally and transversely. Alternating current is employed for producing the magnetic fields. A single loop induction ring is used for the longitudinal tests and a ring clamp for circumferential tests. The welded structure under test is painted with a flat white paint in order to give the best contrast for the magnetic ink. A magnetizing current of 400 to 600 amperes is provided for in the design of the plant. The change-over switch for changing from one direction of magnetic field to the other is in the secondary circuit and is protected by electrical interlocking with the primary

FIG. 399. ILLUSTRATING USE OF STANDARD CRACK DETECTOR ON AUTOMOBILE CRANKSHAFT

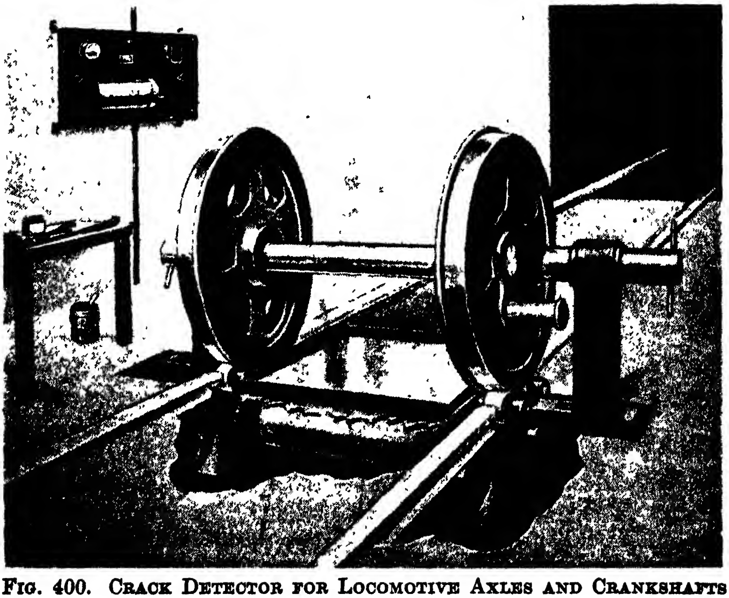

FIG. 400. CRACK DETECTOR FOR LOCOMOTIVE AXLES AND CRANKSHAFTS

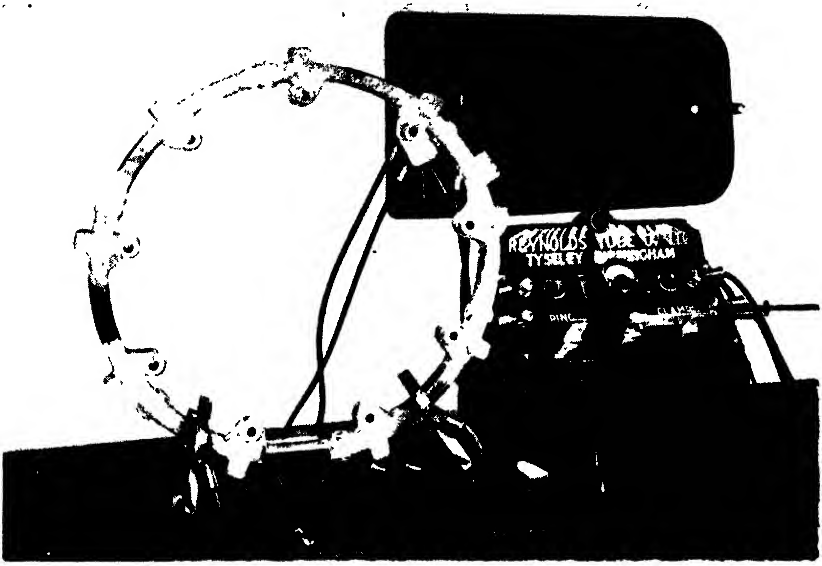

FIG. 401. THE REYNOLDS CRACK DETECTING EQUIPMENT

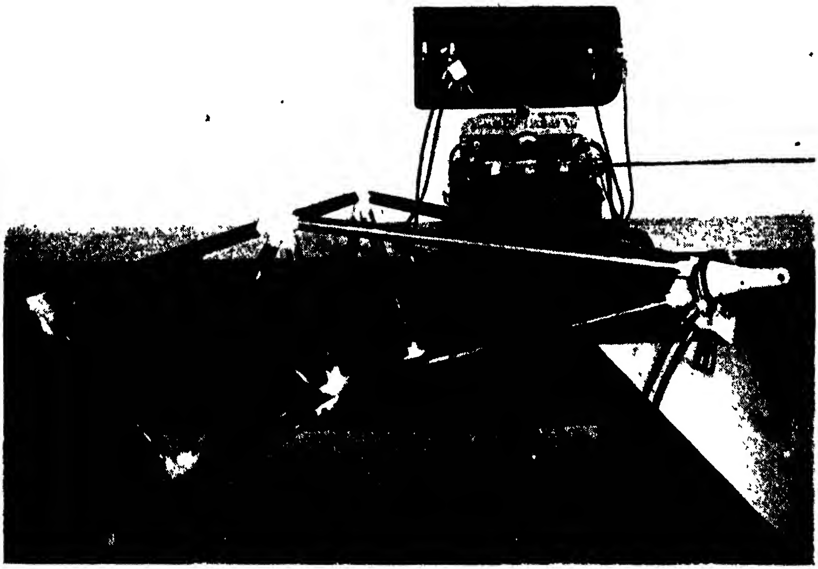

FIG. 402. REYNOLDS CRACK DETECTION APPARATUS IN USE FOR INSPECTING AIRCRAFT WELDED TUBULAR STRUCTURE

circuit. Green pilot lights are used to indicate when the current is flowing.

Mass Production Inspection

For the testing of large numbers of similar specimens special plant is available, such that each specimen is automatically placed in position, magnetized and then, when the current is switched off, a tank containing the magnetic fluid is raised so as to coat the specimen. It is then lowered, leaving the specimen ready for examination. In some cases the test piece is placed in the magnetic fluid, alternating current passed through or around the piece and the tank lowered, so that the part is ready for inspection. All of the operations of loading, magnetizing, covering with liquid and removing the latter are performed automatically in most production model crack detectors.

Magnetic Methods of Testing Steels

It is now possible to employ magnetic methods for testing steels and irons based upon electrical measurements on standard test pieces or finished parts.

The basic principle used is to compare the measurements obtained when the specimen is placed in a magnetic field with those resulting under identical test conditions from a similar shape and size of standard specimen of the same material. The magnetic characteristics are not measured directly in absolute units, since the method is one of comparison. Usually, the measuring instrument used for production testing has two adjustable index fingers showing the upper and lower permissible variations of the instrument readings.

With the magnetic method of testing it is possible *to detect deep-seated material defects* that cannot be revealed by the magnetic crack method previously described. Special apparatus has been designed for the testing of large steel cables and also for welded joints, based upon the principle mentioned.

The *composition of the material* of the specimen can be checked by this method and *the effects of previous treatment,* e.g. annealing, hardening, cold and hot working, etc., studied.

The depth of case-hardened layers can also be measured, as can the thickness of a layer or coating of one material on steel or iron. Many of the tests mentioned for steel and iron can, by a modification of the method, be employed for non-ferrous ones.

Most of the instruments used for making magnetic tests are employed to measure, directly or otherwise, the iron losses during magnetizing with alternating current. The two principal methods used are as follows—

(*a*) By measuring the various iron losses at constant frequency and constant induction, the material constant and the permeability influence the result.

(*b*) At variable frequency where the iron losses of the test pieces are equalized by varying the frequency. These variations of frequency are used to assess the qualities of the material.

Both methods have been used for practical purposes. For reasons of economy the constant frequency method has become of greater importance for sensitivity of measurement. A 50 cycles A.C. system is sufficient.

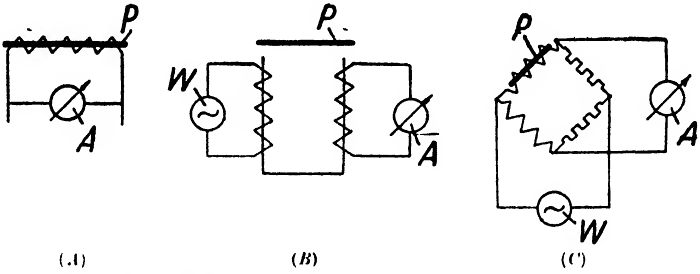

FIG. 403. BASIC METHODS OF MAGNETIC TESTING APPARATUS
A — Indicating instrument. *W* = Source of voltage. *P* = Test piece

There are three basic circuit arrangements employed for magnetic testing, as illustrated at (*A*,) (*B*,) and (*C*) in Fig. 403,* namely—

(*A*) For measuring by the voltage drop in the feeler coil.

(*B*) For measuring through the secondary voltage of a transformer.

(*C*) For measuring by the bridge current of an A.C. type bridge. The current is here arranged to flow by the variation of the impedance of the feeder coil.

In the bridge method (*C*) variation of the feeler coil impedance causes a current to flow across the bridge, its magnitude being an indication of the qualities of the specimen under test.

The alternative methods of obtaining the magnetic fields according to the type of test piece are illustrated in Fig. 404.

The particular shape adopted will depend upon the form of the test piece and on the qualities that are to be examined. For complicated forms of test pieces or for those with large variations of section the coreless coil (*a*) is used for examining the structure of the material, e.g. the durability of the cutting edge or uniformity of hardened steel. For testing the depth of casing in surface-hardened steel the magnetic lines should pass through the hardened layer only; for this purpose the U-shaped yoke (*b*) is used.

---

* "Magnetic Methods for Testing Iron," R. Lessow, *Maschinenbau Der Betrieb.*, Vol. 21, No. 10, October, 1942, and *Engineers' Digest*, 1943.

An important point in connection with magnetic testing is that any dirt on the surface of the test piece will create an air gap when using the straight feeler method (or coils with iron cores), so that unreliable readings will occur. The iron-cored coil method can also be used for measuring the thickness of non-magnetic layers, such as non-ferrous metal strip or foil, lacquer or enamel coatings on steel or non-ferrous metal sheet, the thickness of tin coatings on steel, electro-plated layers, etc. The method in question has been utilized in certain commercial "thickness" gauges.

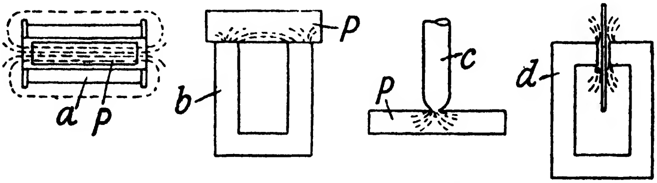

Fig. 404. Magnetic Lines in the Test Piece for Different Purposes
a = Coreless coil. b = U-shaped iron yoke. c = Straight feeler. d = Arrangement for light alloy sheets. p = Test piece

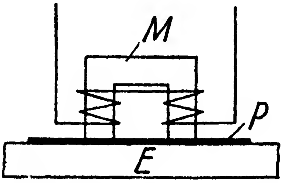

Fig. 405. Principle of Magnetic Thickness Gauge

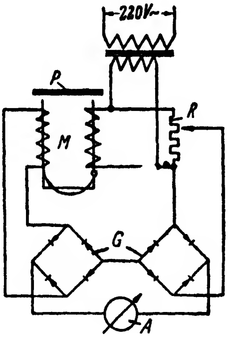

Fig. 406. Iron Tester, with Opposing Voltage from A.C. Mains Supply, the Transformer being used as a Feeler
A = Instrument. G = Rectifier. M = Feeler. P = Test piece. R = Adjustable resistance

Referring to Fig. 405, the coated sheet p is placed on an iron base E and a U-shaped feeler is placed on the surface. By comparing the readings of the electrical instrument with those obtained for a standard thickness of the material under test, variations of thickness can be measured.

The type of curve obtained with a magnetic testing apparatus operating upon A.C., using the transformer and rectifier circuit shown in Fig. 406, in which the transformer acts as the feeler, is given in Fig. 407 for tests made to determine the thickness of a case-hardened layer. The corresponding magnetic apparatus circuit instrument readings for various layer thicknesses there shown is of such a nature that an open scale is obtained, enabling differences to be measured accurately.

Magnetic-inductive Weld Testing Method

The magnetic method of testing metals is also applicable to the detection of faults too far below the surface to be detected by the magnetic powder or ink system. A typical application is that evolved for the examination of welds, the principle of which is illustrated in Fig. 408.* In this method two permanent bar-magnets are used to induce a weak magnetic field transverse to the welding seam. A measuring coil containing an eccentrically placed iron core is then passed over the seam which has remanent magnetism. Sudden changes of the magnetic field over the seam, caused by changes in the permeability somewhere in the seam, excite an electromotive force in the measuring coil; this is amplified and shown on the measuring instrument. In Fig. 408 the welded joint with remanent magnetism is shown at *a*, the rotating core type coil at *b*, the motor for driving the core at *c*, the switching device and amplifier at *d* and the flaw-indicating instrument at *e*.

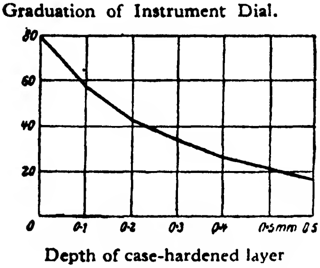

FIG. 407. ILLUSTRATING NATURE OF READINGS OBTAINED IN MEASUREMENT OF THICKNESS OF CASE-HARDENED LAYER OF STEEL

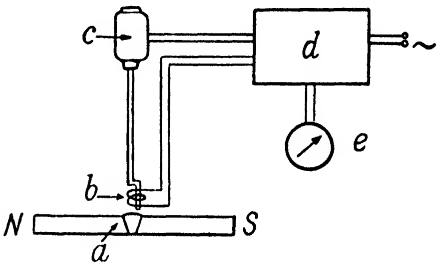

FIG. 408. MAGNETIC INDUCTIVE WELD TESTING METHOD

The instrument has been found to be very sensitive to changes of permeability so that not only coarse flaws are indicated but also varying zones of hardness, etc. By using very strong magnetic fields this drawback can be overcome satisfactorily, since differences in the metal structure mainly affect the initial permeability. The apparatus in question is used for annealed welded joints.

Bar and Tube Testing Method

A method of examining bars and tubes for cracks and slag inclusions is based upon the principle of using the combination of a stationary

---

* "Non-destructive Testing, Based on Magnetic and Electrical Principles," R. Berthold, *Proc. Inst. Electr. Engrs.*, 25th November, 1938.

coil and an alternating magnetic field, as shown in Fig. 409.* It consists of two exciting coils connected one behind the other and two measuring coils connected in opposition. The exciting coils induce eddy currents in the walls of the specimens; the extent of these currents depends upon the conductivity of the walls of the specimen. If this conductivity is impaired by means of a longitudinal crack, then the eddy-current field and, as a result, the opposing inductance will be smaller than in the sound section. Thus, different currents will be induced in the measuring coils and can be measured by means of an amplifying arrangement.

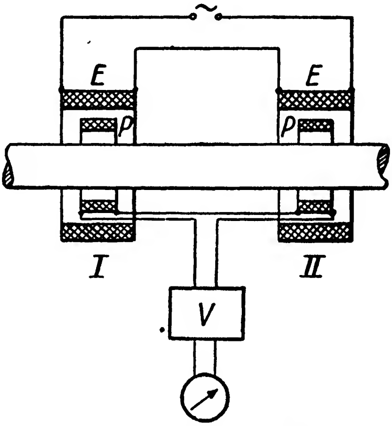

FIG. 409. PRINCIPLE OF TUBE AND BAR TESTING MACHINE
E = Exciting coils. P = Testing coils. V = Amplifier

The application of this method to steel tubes and bars sometimes requires care in interpreting the results owing to effects caused by the well-known influences of hardness zones and non-uniform joints. For this reason the most satisfactory results are obtained with non-magnetic metals, such as aluminium, magnesium, brass and copper, which are very sensitive and accurate in their indication of longitudinal cracks.

Radio Frequency Crack Detector

A more recent apparatus for detecting cracks† in metal parts, known as the R.F. Crack Detector (Fig. 410), comprises a radio frequency generator in a rectangular case which is provided with leads of any convenient length, to the ends of which interchangeable coils may be plugged in to deal with different sizes of material.

* *Ibid.*

† Salford Electrical Instruments, Ltd., Salford.

The material to be tested should be in the form of bar stock, wire or strip, and may be fed through the detecting coils in continuous lengths, at any speed up to 1 ft. per sec. The bar stock may be round, square, hexagonal or any other shape.

Cracks are indicated by a lamp, bell or meter, and the equipment may be arranged if desired to stop the machine feeding the material when a crack is present. Alternatively, means may be provided to reject defective portions.

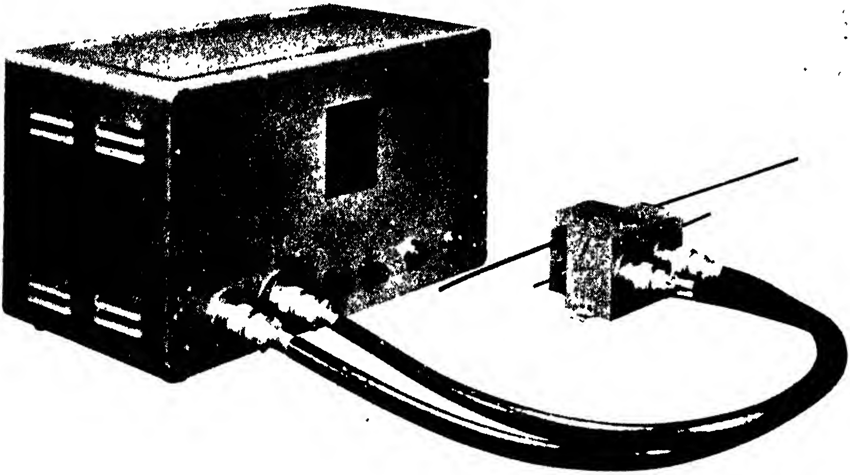

FIG. 410. THE SALFORD R.F. CRACK DETECTION APPARATUS

The R.F. Crack Detector may be used for testing material from 0·05 in. to 2 in. diameter or width and will detect cracks from a minimum depth of 0·0005 in. upwards. It is suitable for testing ferrous or non-ferrous metals. When fitted with a meter it may be calibrated to indicate the depth of crack for any particular material. The standard model is suitable for operation from the ordinary A.C. mains, but special models for use on D.C. can be provided.

X-ray Method of Examining Materials

X-rays, discovered by Röntgen of the University of Wurzburg, Bavaria, are electromagnetic waves whose wavelengths are considerably shorter than those of light,* and they possess certain valuable properties which enable them to be used for the detection and location

---

* The wavelengths of X-rays range from 0·1 to 100 Angström Units (A.U.), whilst those of the visible (light) spectrum are between 3900 and 7700 A.U. For crystal analysis by the X-ray method waves of about 1 A.U. are employed. An Angström Unit equals 10^{-10} metre.

of faults within metal and other material objects, without affecting in any way the materials themselves—in other words, they can be used for non-destructive testing purposes. Before proceeding to consider the industrial applications of these rays it may be of interest to mention their method of production and to give a brief account of their properties.

X-rays are produced during the passage of a high voltage electric current through a vacuum tube and originate where the cathode rays strike a solid object, known as the *target*, within the tube.

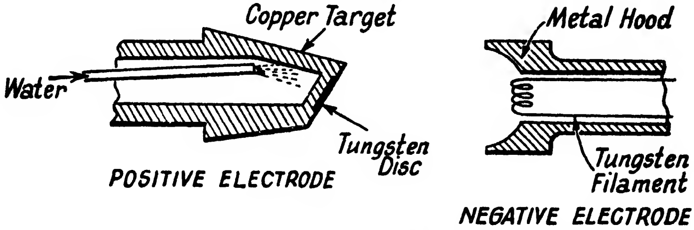

FIG. 411. PRINCIPAL ELEMENTS OF MODERN X-RAY TUBE

The most widely used tube for the production of X-rays is the one devised by Dr. W. D. Coolidge of the General Electric Company, U.S.A. It consists of a thin-walled glass tube having a high degree of evacuation, such that the existing pressure is only a few hundredths of a micron, one micron being $\frac{1}{1000}$ mm. mercury pressure.

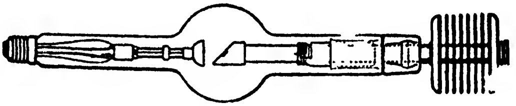

FIG. 412. TYPICAL X-RAY TUBE (AIR-COOLED POSITIVE ELECTRODE)

The Coolidge tube contains a negative electrode tungsten filament (shown on the right in Fig. 411) and a block of metal, known as the target. This usually consists of an air- or water-cooled block of copper into the face of which is inserted a small disc of tungsten; this forms the positive electrode of the X-ray tube. The negative electrode tungsten filament is surrounded by a metal hood which is made of concave shape in order to focus the electron stream from the filament on to the inclined face of the target.

The tungsten filament is heated to incandescence by a separate low-voltage current and is thus caused to emit negative electrons. When a very high voltage direct current is applied to the target unit (positive) and metal hood (negative) these negative electrons are projected across the space in the vacuum tube and strike the inclined face of the target at very high velocities, thus causing X-rays to be emitted as a continuous stream in all directions, i.e. an X-ray beam.

It follows, from the fact that the current in the tube can only be carried by the negative electrons given out by the hot tungsten filament, that the X-ray tube is self-rectifying, but in practice it is not satisfactory to operate at voltages above about 70 kilovolts (70,000 volts) without some auxiliary rectifying device where alternating current supply is used.

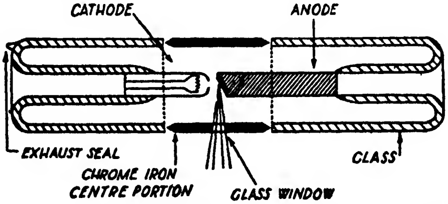

FIG. 413. SCHEMATIC ARRANGEMENT OF PHILIPS METALIX X-RAY TUBE

In practice the filament current is of the order of 3 to 6 volts and the electrode voltages from 50 to well over 1000 kilovolts, according to the particular application. The temperature of the tungsten spiral is from 1700° to 2400° C.

Fig. 413 shows in schematic view the arrangement of the Philips Metalix X-ray tube, with the tungsten-insert type copper anode, chrome-iron cylindrical centre portion (with small glass window) and the filament heated within the hollow metal cathode. The glass tube and metal cylinder form a single air-tight unit which is exhausted to a high degree. A special feature of this X-ray tube is the "line" focus principle; this enables a high load capacity to be combined with good optical qualities. It may here be mentioned that a well-designed copper anode with tungsten insert will withstand an energy input of 200 watts per sq. mm. of focal area per second.

Fig. 414 illustrates a simple Coolidge tube circuit. The electrodes are connected to the source of high voltage *L*, a milliammeter *V* being included in the circuit. The filament is supplied with current from a battery *B*, its value being regulated by a rheostat *R* and indicated by the ammeter *A*. The milliammeter *V* is connected to its high voltage supply through a spark gap, as indicated above it in Fig. 414. The spark gap usually varies from 3 to 10 in., with currents of 5 to 50 milliamperes and potentials of 100,000 to 300,000 volts.

It is possible to alter the degree of exhaustion in the X-ray tube in order to obtain "hard" or "soft" X-rays, for high or low penetration effects, respectively.

Properties of X-rays

X-rays travel with the same speed as light, namely, 186,326 miles a second, and, on account of their very small wavelength, they are able to penetrate materials which would completely absorb or reflect the ordinary light waves. It is this penetration property which renders it possible to use X-rays for examining the interiors of solid bodies.

X-rays are, of course, invisible and like light rays travel in straight lines. They cannot be reflected or refracted like light rays although capable of diffuse reflection from a surface. Nor can they be deflected by a magnetic field, like cathode rays.

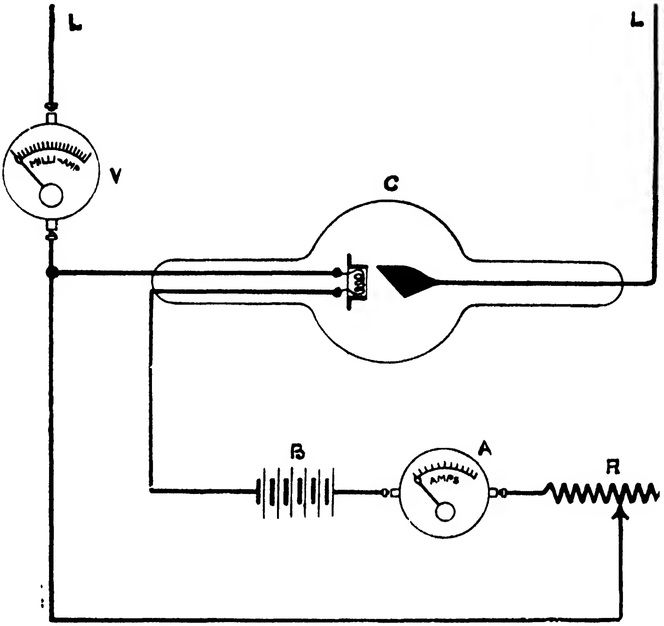

FIG. 414. A SIMPLE COOLIDGE X-RAY TUBE CIRCUIT

X-rays possess the property of being able to ionize air, i.e. to make it conducting.

When X-rays impinge upon certain chemical materials, such as calcium tungstate or barium platino-cyanide, their energy is converted into light. This property of such "fluorescent" materials is made use of in industrial applications of X-rays, for intensifying photographic effects and for rendering visual examination of solid bodies by means of a viewing screen.

The degree of penetration of a solid body by X-rays is found to increase with the voltage applied across the electrodes of the tube, and to decrease with increased thickness of the material. It also decreases as the atomic weight of the material increases. Thus, lead which has an atomic weight of 207 offers a considerable resistance to penetration by X-rays, whereas other metals such as aluminium (atomic weight = 27) allow ready access to them. For this reason, lead screens of suitable thickness, namely, $\frac{1}{8}$ in. to $\frac{3}{8}$ in., are employed in industrial applications for protecting operators from direct exposure to X-rays, since these have a dangerous physiological effect upon the human body.

When a beam of X-rays impinges upon a solid body part of it is diffused or scattered, part is transmitted and the rest absorbed by the material. Some of the latter rays are re-radiated in the form of *secondary radiation.* These scattered or dispersed rays are of the same nature as the original beam and may be regarded as rays which have been deflected by some material upon which they fall. The degree of scattering, however, is different for various materials, but there does not appear to be any simple relation between the amount of scattering and the atomic weight. In this respect, for lighter metals, the amount of scattering appears to depend upon the bulk of material rather than the atomic weight, whereas, for heavier metals, for a given bulk a greater degree of scattering occurs.

It is a *disadvantage of these scattered rays* that they tend to obscure the detail in shadow images produced by the direct X-rays which are photographed.

Utilization of X-ray Penetration Effects

The fact that X-rays penetrate materials of different densities and thicknesses to varying degrees is made use of to obtain shadow pictures or *radiographs*—as they are termed—of bodies of non-uniform constitution.

A simple example of a radiograph effect is illustrated in Fig. 415, which shows a metal body having inserts or inclusions *a* and *b* of different densities from that of the body itself. Upon subjecting the latter to a beam of X-rays from the target *T*, the rays of which are assumed to be sufficient to penetrate right through the body, those rays which meet the lighter density inclusion *a* will experience less resistance than those that pass through the solid material, whilst the rays passing through the denser insert *b* will experience greater resistance and will accordingly have their intensity reduced. If, now, a screen of a fluorescent substance is placed, as shown at *S*, and this is viewed from the back a shadow picture of the kind depicted in the lower diagram *S′* will be formed, which will reveal the interior inclusions *a* and *b*, that cannot otherwise be detected by external visual means.

If, in place of the screen *S*, a photographic film or plate were employed, then—since X-rays possess photographic exposure properties in a somewhat similar manner to ordinary light rays—the development negative would reveal the presence of the inclusions *a* and *b* as blacker and lighter areas, respectively, than that of the uniform metal itself. For X-ray examination the negative only is required for inspection purposes. In the case of a metal casting having gas pockets and solid inclusions of a heavier material the radiograph, as viewed on a fluorescent screen, would show these defects by lighter and darker areas, respectively.

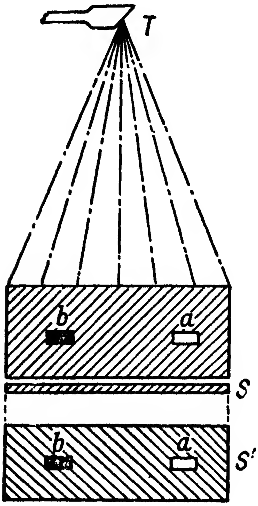

FIG. 415

In the diagrammatic illustration of the principle given in Fig. 415 it has been assumed that the X-ray beam was a parallel one, whereas, actually, it is of conical or divergent form. Thus, since in practice the radiations travel in straight lines from the source *T*, the observed images of *a* and *b* on the screen *S′* will experience distortion and also, if they lie in two different planes, displacements to the right or left of the actual positions of these defects in the body.

To minimize such effects the film or viewing screen should be as near to the lower surface of the body as possible and the X-ray tube as far away as practical considerations of exposure time permit. Further, it is also desirable to locate the film so that the projected image will resemble the original in both shape and size.

Penetration Distances

It has been mentioned that the degree of penetration by X-rays of a metal of given density varies with the voltage applied to the electrodes of the tube. In this connection in the early days of X-ray inspection the maximum voltages then used, namely, 100 to 150 kilovolts, enabled effective penetration of steel to a thickness of about $1\frac{1}{2}$ in. to be obtained. Modern X-ray equipment is such that tubes will operate at and above 1000 kilovolts, but ordinary industrial apparatus is usually worked at 250 to 400 kilovolts, and at this upper value steel of a thickness of $4\frac{1}{2}$ in. can readily be inspected for internal defects.

More recently* it has been shown possible to take X-ray photographs through steel 12 in. thick by means of a 2 million volt mobile X-ray unit developed in the research laboratory of the General Electric Company of America. The exposure required is about 2 hours when

---

* *Machinery* (U.S.A.), December, 1944.

Type A X-ray film is employed at a distance of 3 ft. from the end of the X-ray tube.

Some Photographic Considerations

The films employed for photographic recording of X-ray effects are of a special character. In this connection a good deal of the progress that has been made in connection with the improvement in definition and the reduction of exposure time has been due to photographic research results. The Eastman Kodak X-ray film consists of a layer of gelatine about one-thousandth inch thick containing a silver compound which is extremely sensitive to the action of light, coated on a transparent support. The emulsion in question is radically different from that used for ordinary photographic purposes, since maximum speed combined with good radiographic qualities are the chief essentials.

In order to obtain increased speed and permit the use of double intensifying screens the films mentioned are coated with a sensitive emulsion on both sides and are known as *Dupli-Tized* films.

During exposure, the films are protected from light by a special holder which does not absorb any appreciable X-ray radiation. When X-rays impinge on a film, less than 1 per cent of their energy is absorbed and since it is this proportion that governs the formation of the latent image anything else that can be done to increase the effect of these absorbed rays will reduce exposure periods.

Use is therefore made of *intensifying screens* made up of finely-powdered calcium tungstate fluorescent material held together with a suitable binder on a light cellulose support. In use, the screen is put in direct contact with the emulsion face of the film. The X-rays passing through the object being examined go through the film and on to the screen where they cause fluorescence, so that the image is formed mainly by this source of light.

A further improvement is to place the X-ray film between two of the screens in a light-tight holder or cassette; the exposure required is reduced, by this means, to about one-eighth that required without screens. The Kodak cassette is a light-tight metal envelope with a leaded cover to prevent scattered radiation from reaching the film and a "window" of aluminium or Bakelite to permit the transmission of the X-rays. The screens are fastened to both the front and back, and the film is placed between them. The cover is closed by a strong spring.

In order *to reduce the effects of scattered radiation*, which normally causes a fogging effect combined with lack of contrast in the photographed image, thus rendering detail more difficult to record, use is often made of an apparatus known as a Potter-Bucky diaphragm,*

---

* *X-Rays in Industry*, Eastman Kodak Company, New York.

the principle of which is shown in Fig. 416. It consists of a grid formed of straight narrow strips of lead parallel to each other and separated slightly from each other by strips of wood or other material transparent to X-rays.

Each strip is in line with the primary rays from the focus of the tube; and the long dimension of these strips perpendicular to the plane of the diagram. The space between adjacent strips in the grid forms a slot through which the primary rays pass with no obstruction. Scattered rays within a small angle may pass through the slot, but the great bulk of the scattered rays strike the lead strips at such angles that they are absorbed before reaching the film. It would be objectionable to permit the shadow of these lead strips to show upon the film and this is avoided by causing the grid to move during exposure in a lateral direction as indicated by the arrow.

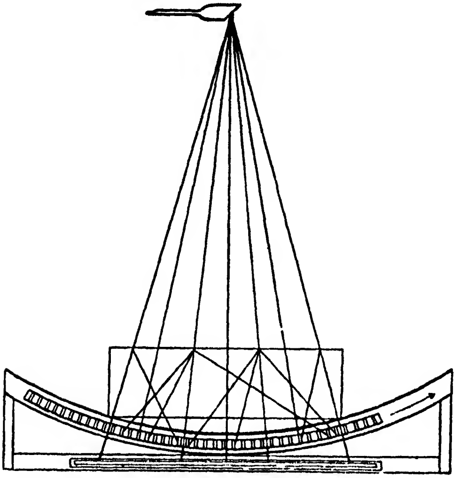

Fig. 416. The Potter-Bucky Diaphragm

To secure this lateral movement conveniently the grid is frequently made in a curved form (like the surface of a cylinder) the centre of which is the focal spot of the tube. During exposure the grid moves a distance of several inches along the circular path. It is important that this motion shall be as smooth and uniform as possible to prevent shadows of the grid on the film.

A marked improvement in the quality of a radiograph is obtained with this device, but its use requires a four-fold increase in the exposure time.

It is usual with many operators to employ cassettes backed with lead for enclosing the film and intensifying screens. The back-scattering effect from the lead has an appreciable fogging effect on the film at voltages of 200 kilovolts and over. A method of overcoming this difficulty is to interpose between the lead backing and the screen a sheet of brass about 0·03 in. thick and another thin sheet of cardboard in front of the brass to protect the film from back scatter and beta rays.

Fig. 417 shows a simple example of screening a metal plate *E*, which it is required to radiograph; the primary rays emanate from the target

A. The plate *E* is provided with a lead plate screen *G* which masks it, so that no edge-radiations reach the photographic plate *D*. The lower surface of the photographic plate is screened by means of the lead dish *F*.

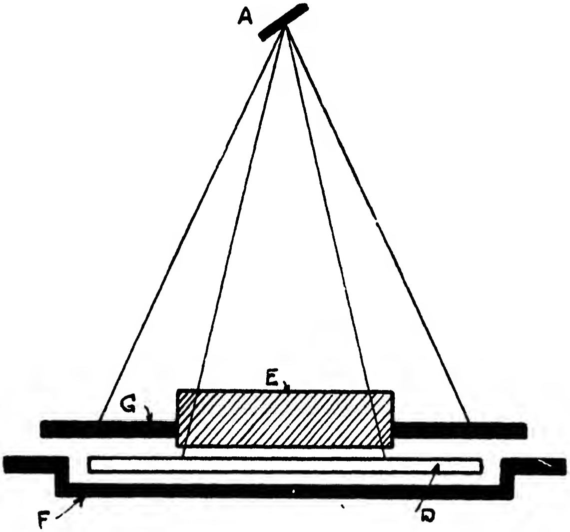

FIG. 417 METHOD OF SCREENING PLATE

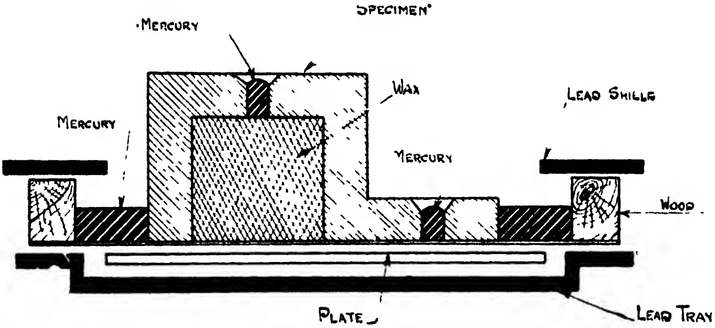

FIG. 418. ANOTHER SCREENING METHOD

Fig. 418 illustrates a typical method of screening a specimen by employing mercury for the holes and edges, and wax for the awkward cavities or irregular shapes. The whole system is placed upon a sheet of cardboard or aluminium, and the photographic plate is protected, as in the previous example, by means of a shallow lead dish.

In certain cases lead shot may be used in place of mercury, and where the bottom of the object is of an irregular shape, as in castings, paraffin wax may be employed to fill up the irregularities and to prevent the mercury getting under the object and obscuring the image on the plate. It is usual to allow an overlap of the lead mask of about 1 in. as a minimum, all round, and the gap between it and the tray must be as small as possible.

For metal plates of a few millimetres thickness the above precautions become unnecessary, and all that is required is a lead mask in front and one behind the photographic plate; in these cases very short exposures are given, so that the weak secondary rays have practically no effect. With thicker specimens, the secondary rays become of increasing importance and the special precautions previously mentioned must be taken to guard against fogging.

When irregularly-shaped objects have to be examined and the use of lead sheet is inconvenient for the purpose of checking scattered radiation a good plan is to employ *lead shot* of different sizes; *lead powder* can also be used for the same purpose. The depth of the shot or powder can be varied to suit the particular application.

A method advocated by the Eastman Kodak Company in connection with the examination of small objects such as balls, irregularly-shaped articles or cylinders, for eliminating secondary radiation effects, is to place them in aluminium dishes and use a liquid-absorbing medium. A combined saturated solution of lead acetate and lead nitrate has proved satisfactory for this purpose; other solutions of heavy salts, e.g. barium iodide or methylene iodide, are also equally effective.

Scattered radiation effects around the edge of the radiographic image can be cured in most cases by placing the film between thin sheets of copper or lead, but this will increase the exposure time.

In the case of objects of varying thickness it is sometimes necessary to cover the thinner portion with sheets of lead or brass during part of the exposure in order to allow penetration of the heavier areas without over-exposing the film under the lighter portions.

Exposure Times

In regard to *the subject of exposures*, for small objects, such as moving mechanisms, it is now possible to take cinematograph pictures, as may also be done in the case of the human anatomy where moving pictures of the heart, kidneys, etc., have been made.

For engineering inspection purposes, however, much longer exposures are required. The actual times depend upon the distance of the X-ray tube from the object, the kilovoltage, current, material of the part under examination and depth of penetration. Thus, in the case of a grey iron casting of 1½ in. thickness a properly exposed negative on Kodak X-ray film was secured in 30 secs., running the tube at 190 kilovolts and 4 milliamperes and at 18 in. away from the film.

As the intensity varies inversely as the square of the distance, directly as the kilovolts, and inversely as the thickness to be penetrated other exposures can be worked out, approximately, from this result.

The following table shows the exposure required in the case of mild steel plates, at 10 in. from the target of the tube, with a 10 in. spark gap.

TABLE 53

RADIOGRAPH EXPOSURES FOR STEEL PLATES

Thickness of Plates (in.)	Exposure in Milliampere-seconds
0·25	20
0·50	80
1·00	350
2·00	1600

Planar Radiography

It is possible to obtain sharply defined radiographs of objects lying in any particular plane of an object by making use of the principle illustrated in Fig. 419.* In this method, during the exposing period, the X-ray tube and film are kept in steady motion along parallel lines but in opposite directions, so that only one plane, namely, that containing *AB*, will be sharply defined on the film; other planes produce blurred images. It will be seen from the diagram that a ray passing through any spot in this plane always arrives at the same spot on the film, whatever positions the tube and film have reached along their respective paths. Fig. 420 shows the effect of making the range of movement of the film smaller than that of the tube. The plane of definition has approached nearer to the film, and it can be shown that any spot on this plane will remain sharply defined. The position of the definition plane is thus controlled by adjusting the ratio of the tube and film movements.

In industrial radiography it is frequently more convenient to move the specimen rather than the tube, and so a modification of the method has been employed in which the tube is kept stationary while the film and the specimen are put into relative motion, thus effecting a considerable simplification in the apparatus required. The specimen and the film move together in the same direction but at different rates, the film travelling slightly faster than the specimen. The greater the difference in their rate of travel the farther the plane of definition

---

* "Radiography—An Aspect of Non-destructive Testing," V. E. Pullin. *Proc. Inst. Electr. Engrs.*, September, 1938.

recedes from the film. As before, by adjusting the relative rates of travel it is possible to obtain a defined radiograph of any plane required.

X-ray Equipment

The general industrial equipment required for the X-ray examination of metal consists of a current supply and control, an arrangement for transforming the available voltage up to the high value required (100,000 to 300,000 volts), the X-ray tube, lead screens for protecting the operator, and the photographic equipment or fluorescent observation screen.

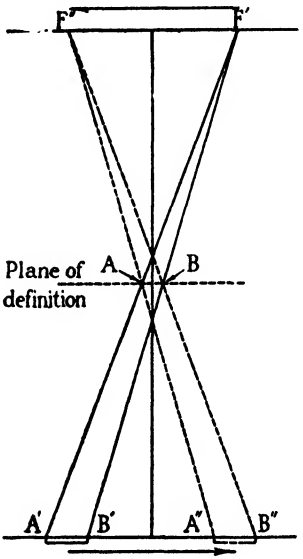

FIG. 419

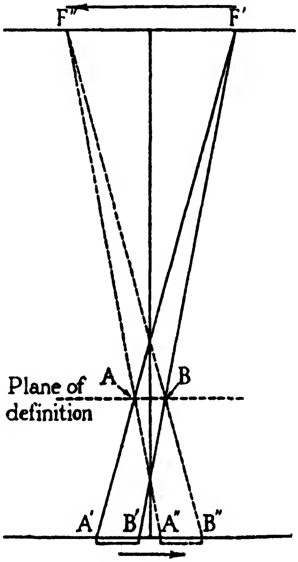

FIG. 420

There are two principal arrangements employed in practice for obtaining the high potential required at the X-ray tube electrodes, namely, (1) *the induction coil and interrupter* and (2) *the transformer with current rectifier.*

For examining metal plates and the like, the induction coil with a spark gap of from 20 to 15 in., in air, was, in the past, found satisfactory; this system is not, however, favoured by some authorities for prolonged exposures or for continuous work, as it has the drawback that the rectifying or kenotron tube, for suppressing the inverse current, becomes "harder" with use, similarly to the X-ray tube, and requires frequent adjustment.

Fig. 421 illustrates diagrammatically the arrangement of the transformer type of apparatus, in which *E* is the transformer with motor starter 2*E*, 3*E* the spark gap, 4*E* the current meter, and *F* the battery stand and control for the filament current of the Coolidge tube, which latter is shown by 1*H*.

The Coolidge tube is placed in a lead-lined box *H*, provided with an aperture which allows the beam of X-rays to be emitted in the desired direction so that it penetrates the test object 3*H* and affects the photographic film 4*H*. Between the operator and the Coolidge tube there is placed a lead screen *G* glazed with a thick flint glass, which stops most of the rays, for protection purposes. The lead-lined box is usually arranged so as to be portable in order that it may readily

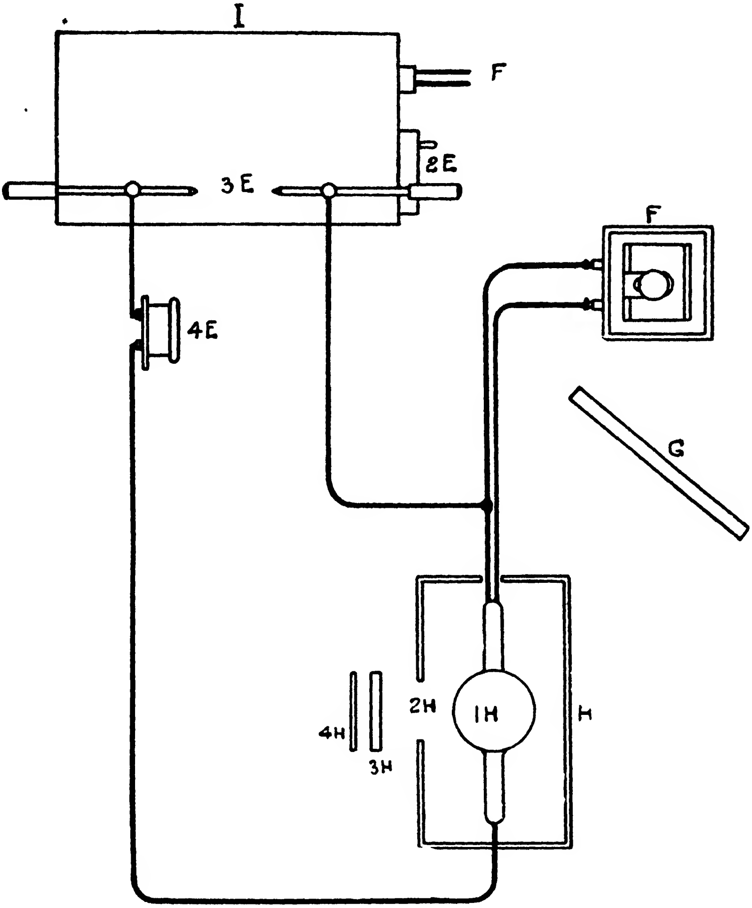

FIG. 421. ARRANGEMENT OF TRANSFORMER X-RAY TYPE APPARATUS

be slung into position for large objects that have to be examined *in situ*.

In later equipment the required current is produced by means of a step-up transformer, which may be regarded as an improved type of induction coil with closed or continuous coil. Alternating current is used and interruption of this current in the primary circuit produces the necessary high voltage current in the secondary for operating the X-ray tube. This high voltage current in equipment of more than 60 kilovolt output is usually converted from A.C. to D.C. by means of a mechanical rectifier, consisting of a large disc with properly located brushes, mounted on the shaft of a synchronous motor revolving in phase with the alternation of the current, which is usually 50 to 60 per sec. The brushes are arranged so as to make contact with the transformer poles only for such a time as to take off the peak voltage portions of the alternating current; the latter alternates from a positive peak maximum through zero to a negative peak maximum. The transformer is connected alternately to opposite ends of the tube every quarter revolution so that the current reaching the tube is of the direct kind.

As mentioned earlier, the Coolidge tube is self-rectifying so long as the anode is kept cool. For low power work the air-cooled anode radiator pattern tube (Fig. 412) is employed; for higher outputs water-cooling of the anode is employed.

The kenotron tube can be used in place of the mechanical rectifier. This tube has a cathode heated by an external current and a large anode and it is placed in the circuit between the transformer and tube. It permits the flow of electric current in one direction but opposes a high resistance to current flow in the reverse direction.

Fig. 422* illustrates the arrangement of an X-ray tube equipment and shows the filament current ammeter *A* which indicates the amount of filament current in the X-ray tube as regulated by a simple resistance. The high voltage current supply to the tube is controlled by the use of an auto-transformer and a limited resistance control shown at *B* and *C*. The auto-transformer has a tapped primary winding to supply the various values of voltage to the primary. This arrangement permits the secondary voltage to remain constant whilst the current is varied to suit photographic exposure conditions. The current in the secondary or tube circuit is indicated by the meter *E*. The high voltages used cannot be measured satisfactorily with a voltmeter, and until recently a variable spark gap was employed; the distance between the sparking points was measured and gave a measure of the voltage. Later, a sphere gap was introduced in place of the points-gap, and this arrangement, which operates in a similar manner, gives more

---

* *Vide* reference on page 527.

accurate readings and with smaller spark gaps for the same voltage values than in the case of the points-gap. It is usual, however, to include a voltmeter (shown at *D* in Fig. 422) in the control stand. This is connected to a few turns of wire around the transformer core and gives readings proportional to the secondary voltage.

The transformer, which is called upon to deal with maximum voltages up to 300,000 volts in normal industrial equipment, requires to be well insulated, and there should be at least 18 in. air gap between the high voltage current conductors and the ground. If, however, a centre-grounded secondary type transformer is used the value of the maximum voltage is halved and the sparking distance to ground reduced to about 10 in.

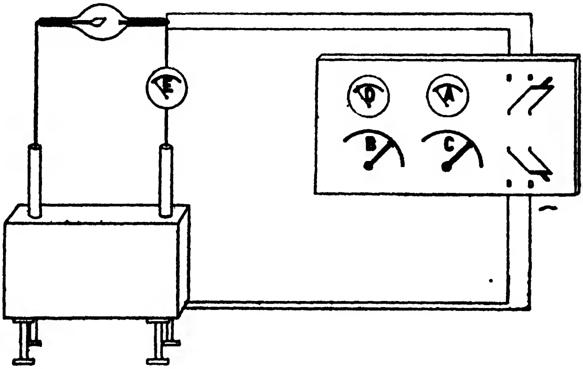

FIG. 422. X-RAY TUBE EQUIPMENT

Commercial X-ray equipment for material inspection purposes is made in several different forms by electrical manufacturers. It is here necessary only to refer to certain typical apparatus each designed for a specific range of applications. Fig. 423 shows the Philips "Macro 100" X-ray equipment designed to suit the needs of the electrical, plastics and light metal industries. It is capable of examining steel up to ⅝ in. thickness and aluminium alloys up to 4 in. thick. It is portable, electrical shock-proof and X-ray proof. The control unit shown on the left is arranged to stand on the angular cube frame above the X-ray current producing unit. The maximum voltage is 100 kilovolts and the consumption at full load is about 6 amperes at 230 volts.

The equipment is well-suited to the inspection of plastic materials and wood; it will deal with practically all thicknesses likely to be used in industrial work; similarly, it is suitable for almost all thicknesses of magnesium alloy castings.

For visual inspection purposes a viewing cabinet, having a fluorescent screen and oblique mirror, as shown in Fig. 424, can be used.

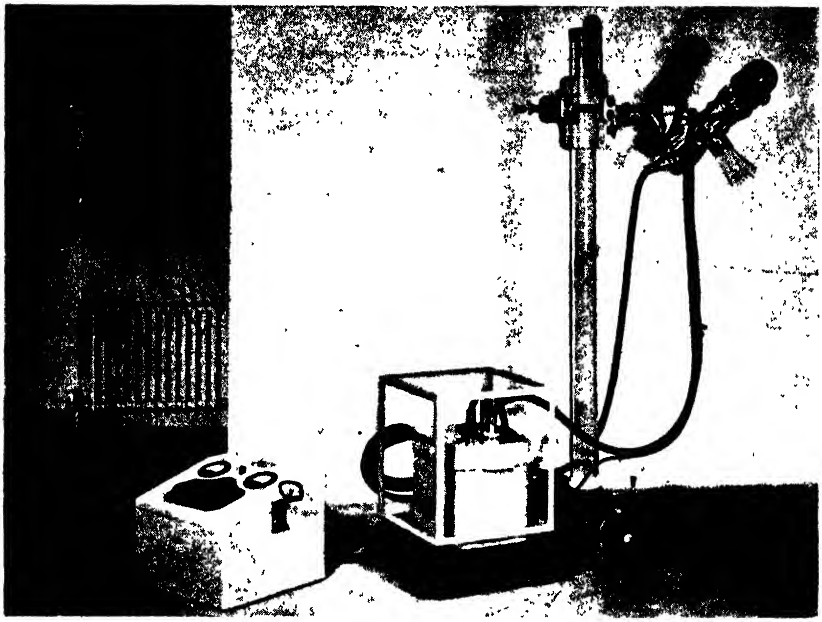

FIG. 423. THE PHILIPS "MACRO 100" X-RAY EQUIPMENT

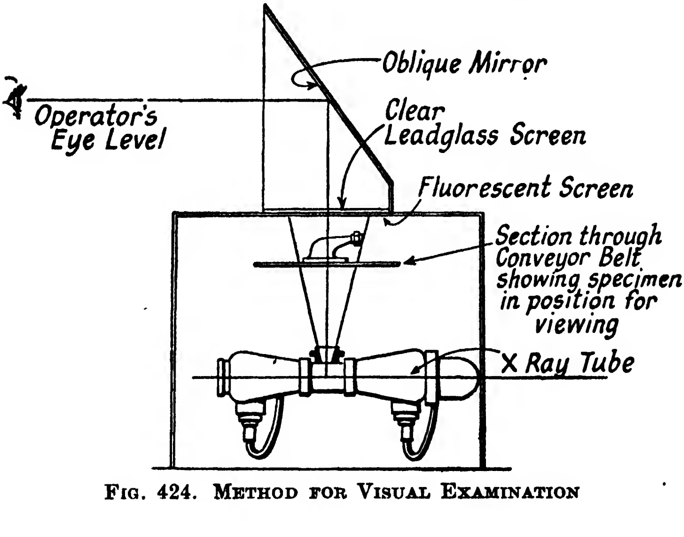

FIG. 424. METHOD FOR VISUAL EXAMINATION

The cabinet unit has a conveyor belt so that the objects can be viewed in succession as they move along under the fluorescent screen; this is a convenient arrangement for production inspection purposes.

The Philips "Macro 150" equipment, shown in Fig. 425, is intended for the inspection of welded joints and castings in general. The complete equipment consists of the following items. A high voltage current or H.T. generator, to which is connected a shock-proof and ray-proof X-ray tube by means of a single shock-proof cable having an earthed metallic covering. The tube is mounted on a mobile stand which is provided with the necessary adjustment to permit the X-ray beam to be angulated in any desired direction. A control table of the trolley type combining all the necessary instruments and controls completes the assembly.

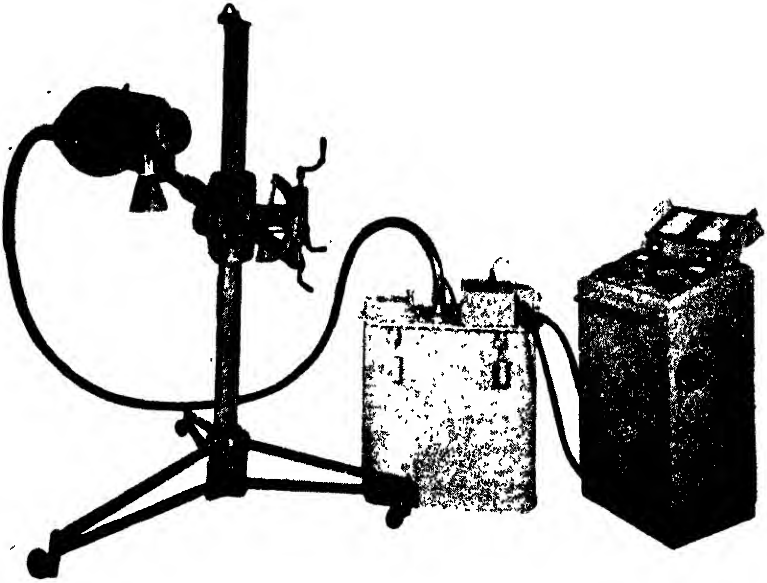

FIG. 425. THE PHILIPS "MACRO 150" X-RAY EQUIPMENT

The maximum tension delivered by the H.T. generator is 150 kilovolts which is sufficient for the examination of steel up to 2 in. in thickness. The design of the apparatus is such as to permit an examination of this nature to be made in exposure times from one-seventh to one-third of those which have hitherto been necessary.

The X-ray tube, which is made by the Philips firm, is designed for operation in an oil-filled shield and is rated at 150 kilovolts and 20 milliamperes (continuous). The tube is mounted on a special kind of stand of the portable type with a tube clamp which allows rotation of the tube about two axes at 90° to each other. The control system is housed in the mobile cabinet shown on the extreme right in Fig. 425. It embodies safety devices which prevent misuse of the controls and at the same time protects the operator against electrical shocks.

The X-ray penetration depth selector of the control system is of the stepless type and is adjustable from 30 to 150 kilovolts. The tube current can be controlled from 5 to 20 milliamperes. For radiographic work the exposure times are controlled by an electrically-operated time switch, working in conjunction with the remotely controlled shutter. Inside the lid are mounted a voltage calibration chart and curves giving details of penetration depths and exposure times for iron and aluminium.

In regard to the scope of the equipment, it will provide satisfactory radiographs of aluminium alloys up to 12 in. thick, aluminium bronze to 1¼ in., and steel up to 2 in. thick. For visual purposes the penetrations are from one-quarter to one-third those for radiographs. A complete processing outfit is available for photographic purposes. It comprises a thermostatically-controlled developing unit, pressure-spray washing tank, safelight timer and electrical film drier. The developing and pressure spray washing units are arranged in the form of metal cabinets and the film drying unit is also of the enclosed cabinet form.

Automatic Inspection Machines

The inspection of aircraft parts on a production basis, by means of X-ray machines made by Triplett and Barton of the United States, enables 20,000 castings to be inspected in 24 hours, using four machines, each operated by electronic control. When a push button is depressed all the circuits are closed and the operation is continuous. For radiographic purposes three exposures per minute can be made on each machine. The X-ray tubes used provide extremely small focal spots so that minute defects can be detected in the test pieces. Used in conjunction with these machines is developing equipment capable of continuously developing and drying 500 films, 14 in. by 17 in., per hour. The same firm also manufactures a portable X-ray trailer of 250 kilovolt capacity which can be drawn behind an automobile. It can be used for inspecting structures, such as parts of aircraft, *in situ*, but is also available for a wide range of other applications on parts that cannot be brought to the laboratory.

Industrial Applications of the X-ray Method

From the point of view of material inspection, the X-ray method is applicable to practically all opaque materials of limited thickness and atomic weight, for examining the structures of metal forgings, castings, and welded constructions for internal defects. Thus, it is possible with modern equipment to examine steel and iron castings up to at least 5 in. in thickness and to detect flaws, such as cracks, blow-holes and inclusions. Aluminium alloy castings in thicknesses up to about 1 ft. can also be inspected in this manner.

In the case of timber, which has a density of about one-tenth to one-fifteenth that of steel, thicknesses up to about 2 ft. can be examined for internal defects, but for the finer examination of such defects as compression, shakes, incipient rot, etc., smaller thicknesses are advisable.

Another widespread application of the X-ray method is that of inspecting the internal condition of assembled parts, for which external visual examination is useless. Thus, plastic mouldings with metal inserts, such as electrical components, may be checked for internal uniformity and sound anchorage of the metal parts. Covered electrical cables and joints can be inspected in a similar manner. Hidden faults such as imperfect internal joints, knots, shakes and similar defects in timber constructions are readily revealed by the X-ray method. In this connection it has been customary in built-up aircraft components, such as spars, wing constructions, etc., to employ the X-ray method of inspection.

Castings

The internal construction of new types of castings in various metals can be examined by means of radiographs or fluorescent screen images, and a good deal of time and labour thus saved as compared with the ordinary method of cutting up specimen castings for inspection purposes.

Occasionally, a complex casting has been machined and then found to be faulty owing to the machine tool breaking through porous places below the surface. A good deal of time would have been saved if the original casting had been submitted to an X-ray examination before machining so that any internal defects, such as flaws, gas cavities, sand and slag inclusions, would have been revealed. As a result of such an inspection it is usually possible to alter the foundry procedure or re-design the casting so as to avoid such faults, and in some cases to reduce the weight of the casting.

Many castings employed in aircraft and automobile construction have internal walls or ribs, the uniformity of which cannot readily be checked; in some instances the walls of cylindrical parts have been found to be eccentric instead of concentric by the X-ray method. Engine light alloy pistons, as cast, are typical examples of parts to which the X-ray inspection method is applicable.

FIG. 426. RADIOGRAPH OF STEEL CASTING
(Circle denotes where metal was punched out afterwards.)

FIG. 427. PUNCHING FROM DEFECTIVE CASTING SHOWN IN FIG. 426

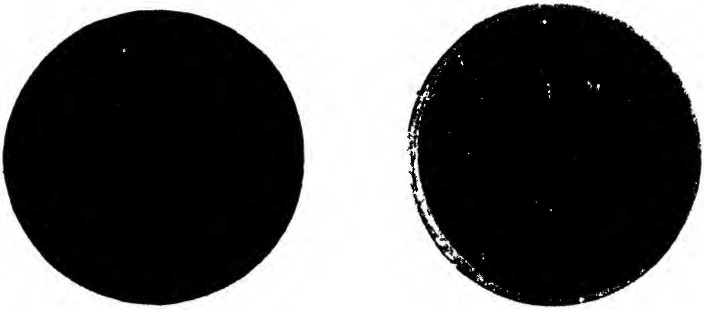

FIG. 428. UPPER AND LOWER SURFACES OF PUNCHING FROM DEFECTIVE CASTING, SHOWING NO INDICATION OF FLAW

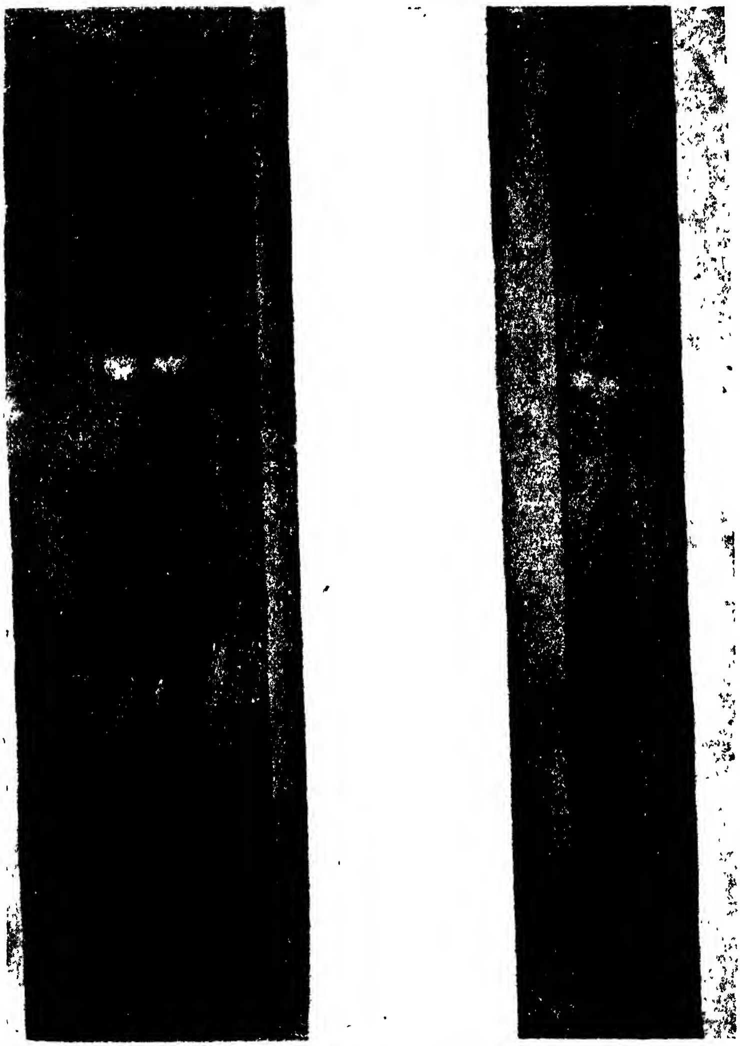

FIG. 429. RADIOGRAPHS OF LAMINATED SPAR SHOWING GRUB HOLES AND KNOTS

Welded Joints

Whilst a considerable amount of progress has been made in the methods, materials and general technique of welding processes, with the result that the majority of welded joints are satisfactory in service, instances often occur in which joints that have passed the superficial inspection and magnetic crack detection tests have failed in practice, owing to concealed internal faults. In this connection the radiographs reproduced* in Fig. 430 illustrate the point quite clearly. Externally, all of these welds appeared to be perfect, but the joint shown at (*A*) had a bad internal crack, whilst those at (*B*), (*D*), and (*E*) revealed the presence of gas bubbles. The welded joints shown at (*C*) and (*F*) were the only satisfactory ones.

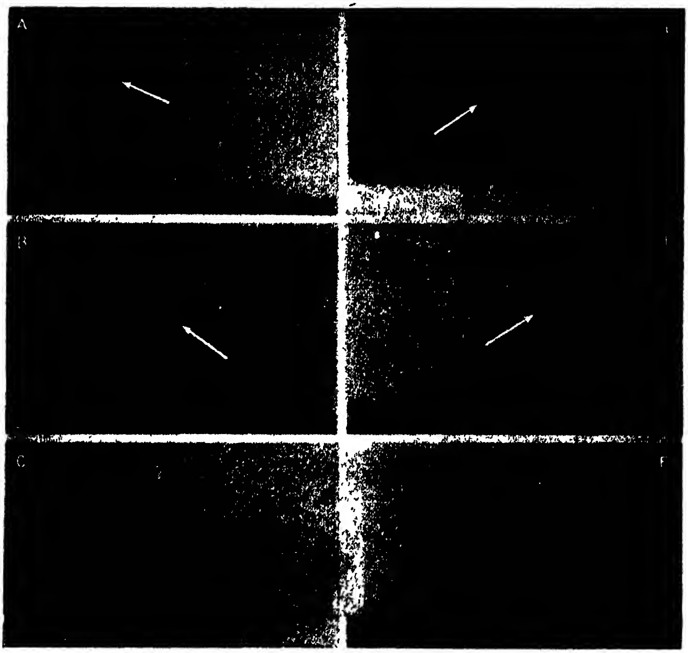

Fig. 430. X-ray Inspection of Welded Joints

Another example is that shown in Fig. 431† of a welded steel joint. The exterior photograph (*A*) indicates an apparently good weld, but the radiograph (*B*) of this joint indicates, by the black spots, that there were numerous gas cavities within the weld. The radiograph (*C*)

---

* *Vide* footnote reference on page 527.

† "X-Rays in the Steel Industry," H. H. Lester, *Franklin Inst. Journ.*, May, 1931.

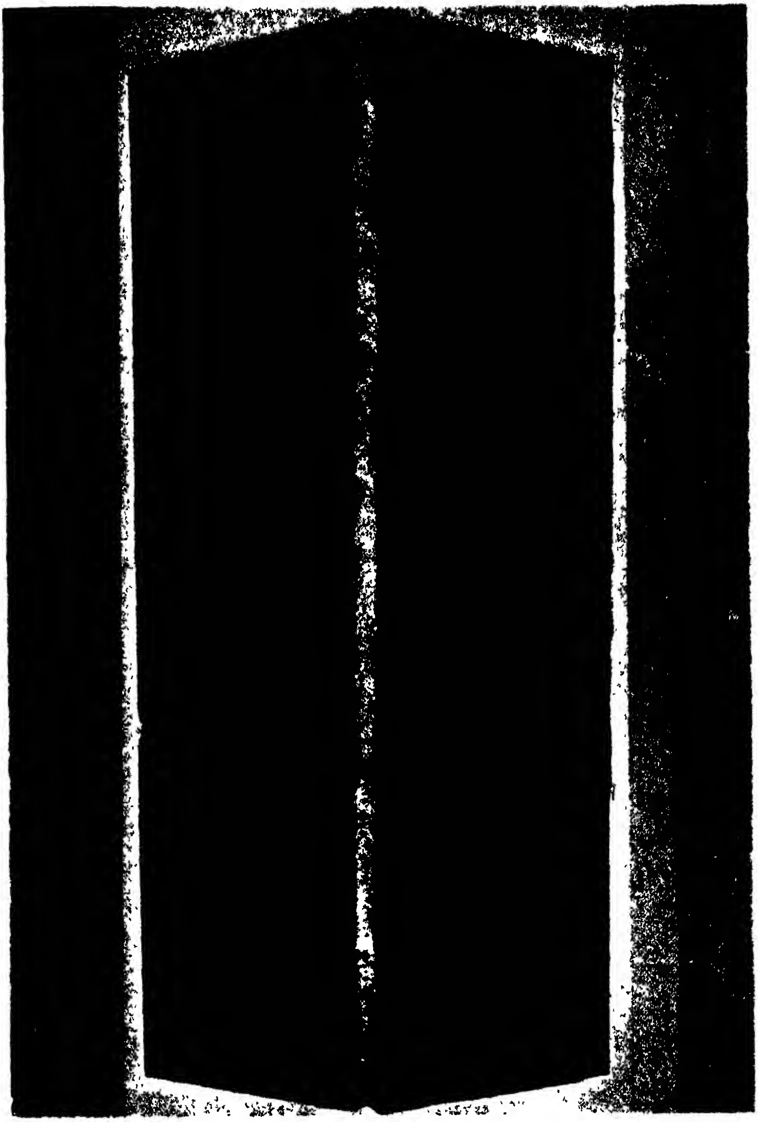

(*B*) (*A*) (*C*)

FIG. 431. DEVELOPMENT OF WELDING TECHNIQUE AT WATERTOWN ARSENAL

(*A*) Photograph of a weld that, judged by visual inspection, was particularly good. (*B*) X-ray picture through this weld. The black spots represent gas cavities. Judged by X-ray inspection the weld was particularly poor. (*C*) X-ray picture taken after development of proper technique. This weld resembled the first one so closely that it would have been difficult to distinguish them by a visual examination. The metal of the weld was found to be sound. The weld was nearly perfect taken from another weld of similar external appearance to (A) indicates a satisfactory weld. The illustrations refer to welded joints made at the Watertown Arsenal, U.S.A. It may here be mentioned that in America the X-ray examination method is now the *standard acceptance test* for important welded joints.

The examination of welds by the X-ray method requires a special technique and a good deal of experience on the part of the radiological observer for often the defects are of small dimensions and require refinements in the apparatus and application to reveal clearly such defects.

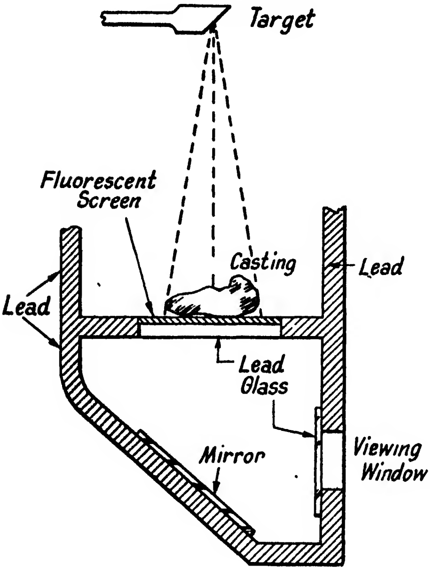

Fig. 432. Principle of X-ray Viewing Cabinet

Fuller details of the method of inspecting welded joints, illustrated with numerous examples of radiographs are given in the article referred to below.*

Brazed and soldered joints are readily examined by the X-ray method and places of weakness disclosed. An instance of the use of this method was that of a transatlantic aircraft on which a soldered joint on the outlet pipe of the engine failed. A radiograph of this joint indicated, by numerous lighter patches upon the darker background of the positive print, that the solder had not adhered satisfactorily.

Moulded plastic components are now being inspected by X-rays on a production basis. Relatively low voltages up to 100 kilovolts are used, and hidden internal defects such as cavities, thin sections, imperfect metal insert union, microscopic flaws, foreign inclusions, lack of homogeneity, etc., can readily be detected.

Visual Examination of Specimens

For many purposes the taking of X-ray film negatives is unnecessary and both time and cost are saved by viewing the shadow pictures on the fluorescent screen. This applies, in particular, to light alloy castings and forgings, wood, plastic and other low density materials of limited thicknesses.

---

* "Radiology in the Welding Art," V. E. Pullin, *The Engineer*, 19th April, 1935.

Special equipment is available for production visual inspection purposes, but the most efficient examination is best made by keeping the specimen moving continuously. In this connection the examiner must be properly protected against both X-ray direct effects and high voltage shocks; the apparatus in question, therefore, is provided with suitable safeguards. Fig. 432 illustrates the principle of a typical visual apparatus, in which there are lead partitions and sides to the viewing cabinet, the fluorescent screen image being observed by reflection from an inclined mirror; it is important to note that the fluorescent screen should not be viewed direct.

The aluminium and light alloy castings used in the engineering industry· are usually inspected in this manner, but the finer defects such as intercrystalline corrosion ones, being too small for detection on the screen, cannot be identified by this method.

Welded joints in ferrous and non-ferrous metals can also be inspected visually, provided the parts are not of too great a thickness. The screens employed include those of calcium tungstate and zinc silicate.

Radium or Gamma Ray Inspection

Instead of using X-rays, one of the three types of radiation emitted by a radium salt can be employed for material inspection purposes. Radium, which is not used in the pure form, but as radium chloride, bromide or sulphate, gives off three different kinds of rays, as follows—

(1) *Alpha* (α) rays, which are corpuscular and non-penetrating in the present sense. They consist of a stream of helium particles having a double charge of positive electricity.

(2) *Beta* (β) rays, which are also corpuscular and consist of a stream of negative particles. This radiation is very harmful to the individual and may cause severe and malignant burning, so that in apparatus used for material inspection it is necessary to use lead screens—usually of about 0·5 to 1·0 mm. thick—for protection purposes.

(3) *Gamma* (γ) rays, which are electromagnetic in character and have pronounced penetration properties; it is these rays which are employed in material inspection.

Gamma rays have a wavelength of 0·01 to 0·001 A.U., which is a considerably shorter value and range than for X-rays. It is mainly on this account that gamma rays are much more penetrating than X-rays. Thus, whereas in laboratory testing with X-rays at voltages of about 1000 kilovolts it is possible to penetrate 4½ to 5 in. of steel, with gamma rays thicknesses up to 10 in. can be penetrated.

Usually, radium sulphate, in very small amount, namely, from 100 to 250 milligrammes, is used. The latter quantity, costing a few thousand pounds, occupies about 0·5 c.c., but it has only about one-two-hundredth part of the intensity of radiation of a good X-ray tube.

It is not possible in this somewhat brief review to go fully into considerations of the properties, technique and general applications of the gamma ray inspection method, more especially as it is still in the laboratory stage of development, although it is being applied in special cases of materials examination in the engineering field.

The advantages of the gamma ray method may, however, be summarized as follows—

(1) It consists of a tiny capsule containing the radium salt, which is self-contained, thus dispensing with the more elaborate X-ray tube and electrical apparatus, controls, etc.

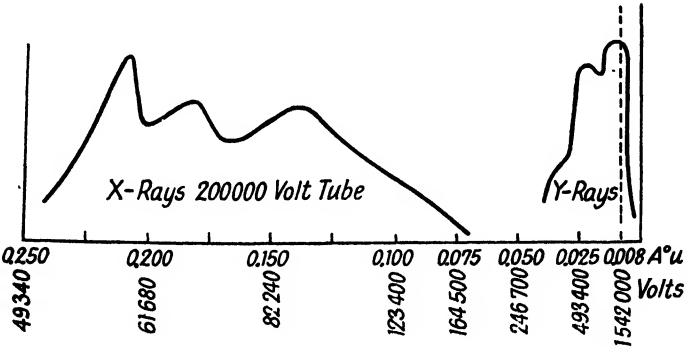

FIG. 433. SHOWING RELATIVE WAVE RANGES AND INTENSITIES OF X-RAYS AND GAMMA RAYS

(2) The capsule can be taken to the work to be inspected and placed in any convenient position relatively to the test object.

(3) It is unnecessary to take a series of exposures with the test object in various orientations, as with X-rays, since a single exposure will give a shadow picture. The usual procedure is to place the radium salt at a suitable distance from the specimen and the photographic film behind the area it is required to examine. After the lapse of a certain time the film is removed and developed.

(4) Gamma rays have a greater penetrating power than X-rays so that greater thicknesses of materials can be inspected.

(5) The rays are particularly suited to the detection of cracks, blow-holes, and corrosion-cavities in large objects or structures.

(6) Radiographs can be made of several objects arranged around the radium salt, with a single exposure.

The disadvantages, as compared with X-rays, are, briefly, as follows—

(1) Considerably longer exposures are necessary. Thus, in the case of a modern X-ray equipment it is possible to penetrate $3\frac{1}{2}$ in. of steel to show a flaw less than 1 per cent of the total thickness in 35 min.

exposure. With 250 milligrammes of radium salt under the best conditions of exposure it would require about 4 hours. Fluorescent screens are used for gamma rays, and these give reduced exposure times as in the case of X-rays.

(2) Gamma rays are not comparable for detail rendering (or definition) with X-rays. The amount of radium salt used does not enable the ideal point source to be employed, so that to improve definition it must be placed at an appreciably greater distance from the test object than in the case of X-rays; the exposure times—which vary as the squares of the distances—are increased, accordingly. Comparison of the photographs of a given specimen taken with X-rays and gamma rays, respectively, shows that much better definition is obtained by the former method.

(3) The contrast between the lighter and denser materials is much less for gamma than for X-rays. Thus, the fact that the X-ray beam is composed of many wavelength radiations, instead of a few, helps to give a greater contrast. With gamma rays the wavelength is very short and lead can be penetrated almost as readily as steel, whereas a shadow picture of much greater contrast is obtained with X-rays.

Perhaps the chief advantage of the gamma ray method is in its application to objects of irregular shape and varying thicknesses When X-rays are used for inspecting such objects it is necessary to employ somewhat elaborate screening of the thinner parts to stop fogging whilst examining the thicker sections, and then to make a separate exposure for the thinner, unscreened, sections. With the gamma ray method, owing to the lower absorption coefficient of the rays, a single shadow picture at one exposure will yield a radiograph that shows little fogging effect; moreover, flaws will be revealed equally well in both thin and thick sections.

For general inspection purposes, however, where the finer flaws and other defects have to be detected, the X-ray method possesses distinct advantages. Mention should here be made of a development in the gamma ray inspection method which is in the laboratory development stage, namely, the use of radium gas, known as *Radon*, in place of the radium salt, by which it is possible to confine the equivalent of a half a gramme of radium salt in a cubic space of half a millimetre so that a much nearer approach to a point source of radiation is obtainable. Better definition and reduced exposure times thus result.

The gamma ray method is employed by the Bethlehem Steel Co., U.S.A., for the detection of small flaws in marine steel castings, a 250-milligramme pellet (less than $\frac{1}{100}$ oz.) being used. This is encased in a small silver capsule, wrapped in cotton and guarded against injury by a strong shell of aluminium alloy. Sharp silhouettes of internal flaws are obtained in the case of intricate designs and sections. From the radiographs it is possible to locate the flaws; then the defective portions are removed with die-sinking drills and cutters and the cavities filled by welding. The castings are then annealed to remove stress effects, machined and given a final rechecking by the gamma ray method. It is thus possible to discover defective castings and to obviate the previously-used lengthy process of machining castings before superficially inspecting them for surface defects. Thus, in the case of large marine rudder posts hundreds of hours of machining times have been saved, per casting, by using gamma rays for inspection purposes.

It has been possible to give only a very short account of the subject, but those interested in fuller details and results should consult the footnote references.*

X-ray Crystal Analysis

In addition to the method of using X-rays for the internal examination of materials there is a further very important field of application of these rays, whereby innumerable problems involving a knowledge of the basic crystalline structure of various materials can readily be solved. Thus, it is possible by means of *diffraction photographs* produced by X-rays to study the effects on the crystal grains of metals by various mechanical processes such as cold-rolling, drawing, tensile and compressive straining; the effects of various modes of heat-treatment; the structure of alloy steels under various conditions; corrosive action effects upon metals, etc. The smallest crystals or unit cells may be regarded as being built up of atoms and molecules arranged in regular rows and in parallel planes with their mutual forces restraining them to relatively fixed positions in solid matter. Thus, the ordinary crystal as it is commonly known is produced by the continued repetition in all directions of the smallest crystals or cells. The fact that X-rays are scattered within solid objects indicates that the diffraction effects experienced by the rays are due to the repetition of these cells giving rise to three-dimensional diffraction gratings.

As the spacings of the minute crystals, with their atoms lying on equidistant parallel planes, are of the same magnitude as wavelengths of X-rays, the diffraction pattern registered on a photographic film by a fine beam of X-rays passing through a specimen will be characteristic of each and every crystalline material, for each kind of crystal represents a different arrangement of atoms. Thus the diffraction

---

* "Radium in Engineering Inspection," V. E. Pullin, *The Engineer*, 6th May, 1932. "Radium in Engineering Practice," V. E. Pullin, *Proc. Inst. Mech. Engrs.*, 1933–4. "Gamma Ray Radiographic Testing," G. E. Doan (Berlin), *Franklin Inst. Journ.*, August and September, 1933.

patterns may be regarded as *a kind of finger-print identification* of each metal and the crystalline condition of the metal, since any mechanical or thermal change causing an alteration in the atomic arrangement will produce a corresponding change in the nature of the X-ray pattern.

The method outlined is applicable not only to the single crystals of pure metals but also to materials consisting of aggregates of small crystals, i.e. to practically every solid material; many substances hitherto regarded as being non-crystalline have now been shown, by the X-ray diffraction method, to be crystalline, although the crystals are too small to be identified through the microscope.

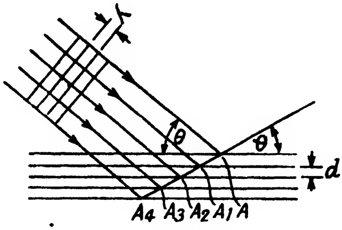

FIG. 434. PRINCIPLE OF X-RAY DIFFRACTION

The principle of the diffraction method is illustrated in Fig. 434, which shows a section perpendicular to any set of atomic layers in a crystal. A beam of X-rays is shown on the left, impinging on the surface and also penetrating to the different layers, being diffusely reflected, along the line A, A_1, A_2, A_3, A_4, etc., at the same angle θ as for the incident beam. Actually, the X-rays are emitted in all directions but those in a line and in phase with the X-rays from A produce a reinforced effect resulting in increased intensity; similarly for the rays reflected from A_1, A_2, A_3, etc. It follows from this that when a beam of X-rays is reflected from the face of a crystal the angle of incidence or reflection θ must be related to the wavelength of the X-rays λ and to the distance d between the atomic layers. Thus, it can readily be shown that

$$n\lambda = 2d \sin \theta$$

where n is the order of reflection.

By measuring the wavelength λ and angle θ, it is possible to ascertain the atomic layer dimension d.

In this connection, following the original conclusion of Laue, in 1912, on the scattering of X-rays in crystals and the related atomic diffraction properties, the subject was developed by W. H. and W. L. Bragg in this country to the practical stage of analysing crystal structures by the employment of the crystal spectrometer in which crystals of known interplanar spacings are mounted and rotated in the instrument, and the angles of reflection of the X-rays measured.

Fig. 435 shows an X-ray beam from a source O passing through a small diameter hole in a lead screen S so as to produce a very narrow beam. The major part of this beam passes right through the crystal C and thence along the line OA until it meets the photographic film or plate, where it produces a bright spot (as reproduced on the contact positive print). Part of the beam is reflected as the crystal is rotated slowly until at the correct angle θ (Fig. 435) it proceeds along CB to produce another bright spot at B. Actually, each reflecting atomic plane of the crystal during rotation will give a bright spot, but at different radii from each other, so that the resultant effect on the print will be a bright central spot and a series of other bright spots on either side of it. The corresponding reflection angles can be estimated from these radial distances so that the types of atomic planes and their spacings give the required characteristics of the crystal.

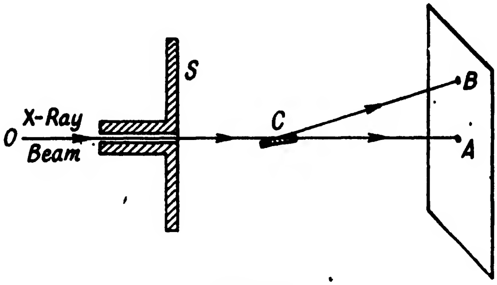

FIG. 435

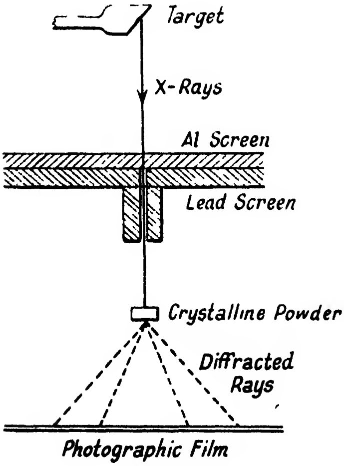

FIG. 436

If, instead of the crystal C in Fig. 435, a small block or tube of crystalline powder is employed as shown in Fig. 436, it is then unnecessary to rotate the block since the innumerable unit cells or basic crystals have many of their number which will be suitably orientated to the correct angle of reflection. Thus, instead of obtaining a series of luminous spots on the resulting print, there will be circles of various diameters arranged concentrically with the central luminous spot caused by the axial ray passing right through the crystalline powder block.

X-ray Powder and Universal Cameras

A standard crystallographic X-ray equipment for industrial use, made by the Metropolitan-Vickers Company, is illustrated schematically in Fig. 437. This embodies two types, namely, *the powder camera*

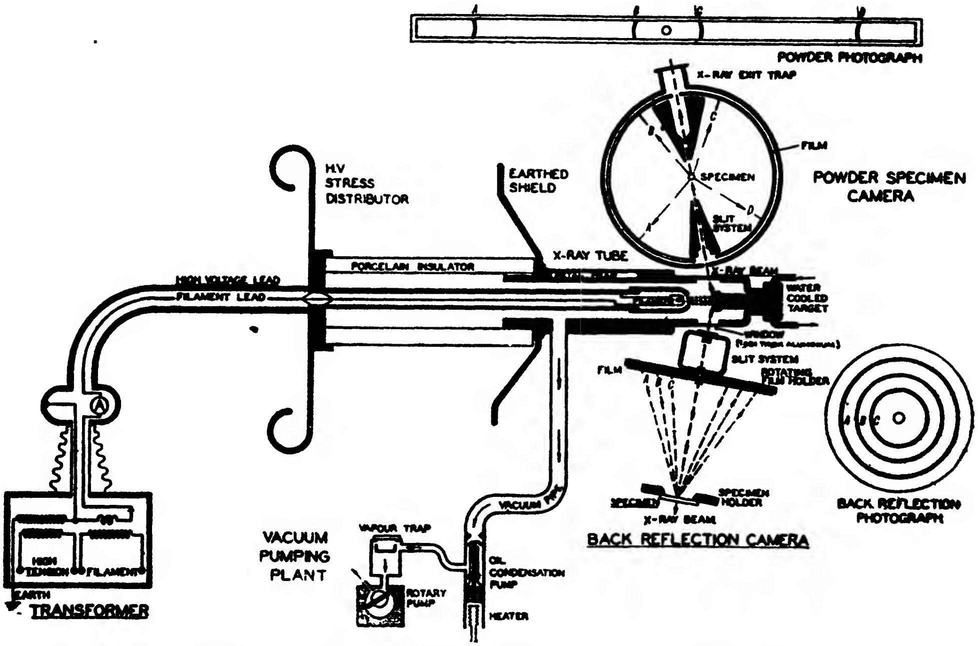

FIG. 437. SCHEMATIC DIAGRAM OF METRO-VICK X-RAY EQUIPMENT FOR OPERATING POWDER AND UNIVERSAL CAMERAS

and the *universal camera.* The former is used to obtain X-ray diffraction and reflection patterns from a sample in the form of powder or wire, in a simple operative manner and with a high degree of accuracy. The specimen is rotated during exposure in order to ensure that all the crystals in the portion exposed to the X-ray beam are presented at all angles to the beam. A small clock-type electric motor is provided for the purpose, suitable gearing and a dog-clutch being employed in the driving mechanism. The specimen holder is provided with centring screws to facilitate centring of the specimen.

The type of powder photograph obtained is indicated at the top in Fig. 437.

The universal camera is capable of a greater range of applications and it provides certain information not obtainable with the powder camera, such as the orientation of crystals in sheet metals. A number of fitments is available to accommodate a variety of specimen shapes. The type of photograph obtained with this camera is shown on the lower right-hand diagram, i.e. the *back reflection photograph.* It may be mentioned that when taking this type of photograph it is necessary for comparable results to be able to measure the distance from the film to the specimen very accurately; a micrometer is provided for this purpose.

Standard patterns are available or can be made with the camera so that the operator has only to compare the patterns obtained from any given specimen with the standard one to detect any departure from the correct composition, or state.

Information Revealed from X-ray Patterns

If the crystals are in the pure unstressed or annealed condition the resultant concentric circles will be of practically uniform widths, i.e. continuous, but if, on the other hand, they have become stressed in any manner, as by mechanical treatment, the minute crystals will become elongated by the process of crystalline slipping in different directions. The net result of this will be that the reflections from the crystals do not emerge with equal intensity in all directions, so that instead of a continuous circle on the photographic plate or print there will be either a circular band of varying width or intensity or an interrupted circle with bright patches arranged concentrically about the centre (bright) spot.

Thus, from an examination of the X-ray diffraction photograph it is possible to detect the actual condition of the crystals or structure of the metal. In the case of aluminium wire drawn through dies the final result is that the small cubic crystals are so arranged that a diagonal of the cube is very nearly parallel to the axis or drawing direction, and this tendency of the crystals to orientate themselves is at once revealed by the X-ray pattern.

Examples of some of the different X-ray patterns relating to engineering metals are reproduced by courtesy of *The Engineer* in Fig. 438.*

Pattern A, obtained from a metal consisting of a mass of unstrained small crystals, as in the case of annealed material, consists of concentric circles, each ring being referable to a particular plane in the crystal.

Pattern B, known as the "spoked" formation, is associated with preferred orientation of the crystals. It is a well-defined symmetrical arrangement and is characteristic of metal that has been stressed in rolling. Here, the pattern is due to the preferred orientation viewed perpendicularly to the direction of rolling of copper, which has a face-centred cubic lattice.

Pattern C is a combination of rings and spokes, the former suggesting small crystals and the latter some degree of strain. The appearance indicates the tendency of the crystal units to orientate themselves in a definite direction as in the early stages of a tensile test. This partial "spokiness"—which is generally known as *apherism*—disappears when the metal is annealed.

Pattern. D is typical of X-ray photographs obtained from large crystal units, which are not orientated, the example shown being manganese steel.

Pattern E represents the diffraction effects experienced from a metal having very large crystals, in the non-orientated state.

Pattern F was obtained from a specimen of unrolled iron. It shows that the iron had moderately large crystals without any kind of orientation. The effect of rolling this metal was to produce a pattern of the class represented by the illustration *C*.

The manner in which strain affects the diffraction pattern is clearly revealed by enlarged images of a portion of the pattern. Thus, in the strained condition a magnet steel exhibits a broad band, but if the steel is heat-treated in order to remove the strain effects the band becomes resolved into a double line or "doublet." A spotty type of band is an indication of coarser structure, and if of a doublet nature it shows that there is comparative freedom from internal strain, whereas if diffuse in appearance, the presence of strain is revealed.

The examples mentioned are but a few of innumerable instances of X-ray diffraction patterns that can be obtained with crystalline materials of the ferrous and non-ferrous groups; the organic materials furnish a further extensive range of patterns.

It is not possible, here, to consider the detailed applications of the X-ray diffraction method to the solution of research and industrial problems, but the following are representative of some of the examples

---

* "X-Ray Crystal Analysis in Engineering," V. E. Pullin, *The Engineer*, 4th July, 1940.

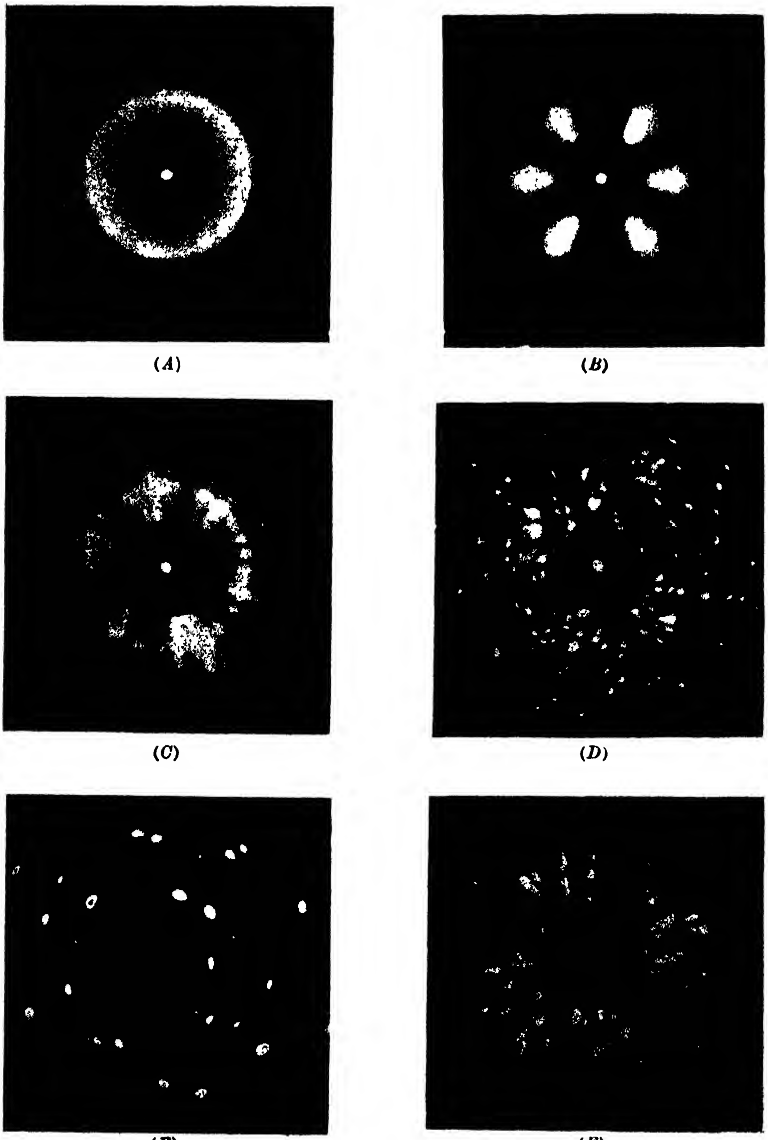

(A) (B)

(C) (D)

(E) (F)

FIG. 438. SOME TYPICAL X-RAY DIFFRACTION PATTERNS

drawn from the work carried out at the National Physical Laboratory before the war of 1939.*

(1) *Cold Work Effect on Metals.* Whilst this subject has already been referred to the results may be summarized by stating that the X-ray analysis shows that, under stress, the first effect is a distortion of the crystal grains. When this has reached a certain stage, the grains begin to orientate themselves so that a certain crystal axis coincides with the direction of rolling or drawing. By X-ray examination, the progress of recrystallization on annealing can be followed in detail.

(2) *Hysteresis Effects in Different Silicon-steel Transformer Sheets.* The samples with low hysteresis loss are characterized essentially by a more perfect crystallization. Large grain size is not the essential feature although the treatment which produces large grain size naturally tends to produce a more perfect crystalline arrangement.

(3) *Magnetic Condition Changes.* It has been found that the change from non-magnetic condition to a slightly magnetic condition of austenitic chromium-nickel steel by cold-work is due to the formation of some α iron by the process of cold-work.

(4) *Spoiling of Tungsten Magnet Steel by Treatment in the Range 700° to 1000° C.* X-rays have thrown much light on this problem, and have shown that, apart from changes in the constitution of the steel as a result of the treatments imposed, there is also a marked effect on the grain size of the structure of the steel, and on the degree of distortion of the crystal lattice. A high coercive force is associated with a marked distortion of the lattice.

(5) *Differences in Structure of Various Layers Adjacent to the Surface of Nitralloy Steel after Nitriding.* X-rays reveal the composition of the various layers and also show that there is considerable distortion of the iron lattice, the amount of distortion being in line with the degree of hardness of the various layers.

(6) *The Difference between the* α, γ, *and* δ *Modifications of Iron.* X-rays have shown that α, β, and δ irons have the same crystal structure (body centred cubic) whilst γ iron is face centred cubic. The change from α iron to the so-called β iron has, therefore, been shown not to be an allotropic change as ordinarily understood.

(7) *The Causes of the Difference in Brightness and other Properties of Electrolytically Deposited Chromium.* The nature of the deposit is known to depend on the temperature, current density, and composition of the bath. The X-ray measurements of the crystal grain size of deposits made under varying conditions indicate that a bright deposit is associated with a structure in which the grain size is so small that the material is approaching the amorphous condition. The X-rays

---

* *The Industrial Application of X-ray Crystal Analysis*, Dept. Scient. and Industr. Research Publication.

also reveal a tendency for selective growth of these small crystals parallel to the octahedral planes. They also show that the most brilliant deposits are obtained when the deposit consists of extremely small crystals with relatively large octahedral faces.

A considerable amount of information on the subject is also given in a series of 23 separate Papers published under the general heading of "X-Ray Analysis in Industry" in the *Journal of Scientific Instruments* No. 5, May, 1941, and No. 7, July, 1941. References to some other literature on this subject are given in the footnote below.*

---

* *Industrial Radiography*, by Ancel St. John and H. R. Isenburger (John Wiley & Sons, New York).

"Radium in Engineering Practice," by V. E. Pullin, *Proc. Br. Inst. M.E.*, Vol. 174, 1933, p. 305; and *Machinery* (London), Vol. 41, 1933, p. 763.

The Crystalline State, Vol. 1, by W. L. Bragg (G. Bell & Sons, London).

Applied X-rays, by George L. Clark (McGraw-Hill Book Co., New York).

"X-Ray Methods in the Investigation of the Failure of Metals," by H. J. Gough and W. A. Wood, *Br. Journ. Radiology*, Vol. II, July, 1938, p. 479.

Handbook of Industrial Radiology, by J. A. Crowther (Edward Arnold Ltd., London).

CHAPTER XV

TESTING OF PLASTIC MATERIALS

WITH the ever-increasing employment of plastic materials in industry and the widely extending range of such materials in the homogeneous and reinforced conditions the need has arisen for standardized tests on these materials to determine the mechanical strength and physical properties in order to provide reliable data for the designer and the general user of such materials.

In applications where the plastic material has to withstand load effects it is necessary to know the mechanical strength properties under the particular conditions of loading, e.g. tensile, compressive, flexure, impact, etc. In other cases a knowledge is required of the electrical properties, resistance to temperature effects, resistance to attack by acids and alkalis, moisture absorption, and other physical conditions.

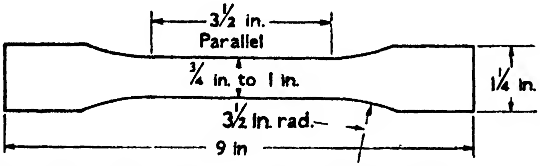

FIG. 439. TEST PIECE FOR SYNTHETIC RESIN BONDED FABRIC SHEET

In regard to tensile tests these have been standardized in this country for laminated sheet material.* The shape of the test piece specified by the British Standards Institution is shown in Fig. 439, and it is laid down that the material shall be tested in a direction (denoted by the letter "*A*") with the principal axis either in the warp or weft direction of the fabric and in another direction (designated "*B*") at right angles to the direction "*A*." The term "edgewise" is employed to denote that the load is applied in a direction parallel with the plane of the laminations, and "flatwise" in a direction perpendicular to the latter plane.

For sheets of ½ in. thickness and below, the thickness of the specimen is that of the sheet, whilst for sheets of greater thickness than ½ in. the specimen is machined down to a thickness of ½ in., one original surface being retained.

Two specimens are tested in tension for each direction *A* and *B*. The average breaking loads for each direction are ascertained and the *lower* value is taken as the tensile strength.

---

* Synthetic Resin Bonded Fabric Sheet, B.S.S. No. 972—1941.

The load is required to be increased steadily at such a rate that the minimum specified breaking stress is reached in approximately 2 mins. from the time of the initial application of the load. Special care must be taken to ensure correct aligning of the test piece, and it may be of assistance to interpose emery cloth between the test piece and grips, the emery cloth being in contact with the test piece.

Three types of sheet are specified by the British Standards Institution, namely, *A*, *B*, and *C*. The former has the highest tensile strength, and is characterized by having more than 100 threads per inch in warp and weft. Type *B* has 45 to 100 threads, and Type *C* 35 to 45 threads. The following are the specified minimum tensile strengths as defined above—

TYPE	TENSILE STRENGTH (MINIMUM)
A	14,000 lb. per sq. in.
B	10,500 lb. per sq. in.
C	9,000 lb. per sq. in.

Transverse Tests. Tests to determine the cross-breaking strength are made on beam specimens ½ in. deep by ½ in. broad, and not less than 6 in. long. For each type of material four tests are specified, namely, two each in directions *A* and *B*. The test piece is placed on V-shaped blocks, 4 in. apart, and loaded at the centre by another V-shaped block. The contact edges of the blocks have a radius of $\frac{1}{16}$ in. and they are not less than 1 in. long.

The load is applied steadily and uniformly at such a rate that the specimen will fracture in 1½ to 2½ min.

The modulus of rupture is estimated from the following formula—

$$\text{Modulus of rupture (lb. per sq. in.)} = \frac{W \, . \, l}{b \, . \, d^2}$$

where W = breaking load in lb., l = length between supports in inches, b = breadth and d = depth of test piece, in inches.

For a beam of ½ in. by ½ in. section and 4 in. span, the modulus is the breaking load in pounds multiplied by 48.

In calculating the modulus of rupture the minimum breaking load value obtained from the four tests is employed. The following are the minimum modulus values for specimens made from sheets of ½ in. thick and above—

TYPE	MODULUS (MINIMUM)
A	20,000 lb. per sq. in.
B	18,000 lb. per sq. in.
C	16,500 lb. per sq. in.

In regard to the mode of fracture the material should not fail by splitting along the laminae.

Punching Test. When a sheet not exceeding ⅛ in. thick is punched in accordance with the manufacturer's recommendations the material should show no sign of cracking or splitting when a hole of ¼ in. diameter is punched. The distance between the edge of the hole and edge of sheet should be equal to the thickness of the sheet.

Machining Test. Synthetic resin bonded fabric sheets are required to be capable of being sawn, milled, drilled, tapped, and shaped without showing signs of splitting, cracking, or chipping.

Compression Test. When deemed necessary by the purchaser, the resistance to compression is determined on a 1-in. cube. The initial height of the test piece is measured under a bedding load of 300 lb., and a proof load of 10,000 lb. is then applied uniformly in ½ to 1 min., the height of the test piece being measured. The material is considered satisfactory if it shows a yield of not more than 4 per cent and without signs of cracking, splitting, or delamination.

Other Tests. In addition to the mechanical tests, synthetic resin bonded sheets are required to conform to certain requirements in regard to their *resistance to water absorption and resistance to hot oil,* and to withstand specified electrical tests for insulation and electric strength (proof) after immersion in water and at 90° C.

Special testing machines are now available for tensile, transverse and impact tests of plastic materials; particulars of the latter machines are given in Chapter X.

A universal testing machine, known as the Olsen "Plastiversal" is now available for carrying out tension, compression, and flexure tests on plastic material specimens in the film, sheet or moulded condition. Thick blocks, plates or other objects can be tested in both bending and compression.

The machine, illustrated in Fig. 440, has a maximum capacity of 10,000 lb. in tension and 50,000 lb. in compression, and has a stroke (starting with 4 in. between the tension grips) of 24 in.

The load is applied by screw power with a guided crosshead, an electric motor being used to operate the straining gear. A wide range of testing speeds is available with the electrical equipment, a dial and vernier control and setting being provided for this purpose. The high rate of straining provided for is from zero to 10 in. per min. and the low rate from zero to 0·5 in. per min. The load is measured on a large diameter dial with ½ lb. divisions up to 500 lb., 2 lb. divisions up to 2000 lb., and 10 lb. divisions up to 10,000 lb., for tensile testing. For compression testing the range is from 0 to 50,000 lb. and by 50 lb. divisions. A dual weighing system, consisting of separate levers for tension and compression loads, provides accuracy and sensitivity over the loading ranges. The machine can be provided with a 10 times stress-strain recording device for plotting results on an 8 × 10 in. chart as shown on the right in Fig. 440; it gives a continuous record of load against actual elongation of the specimen between gauge lengths of 2 to 4 in. A rate-of-loading indicator in the form of a third dial pointer, rotated around the dial at a set speed, is also provided with this testing machine.

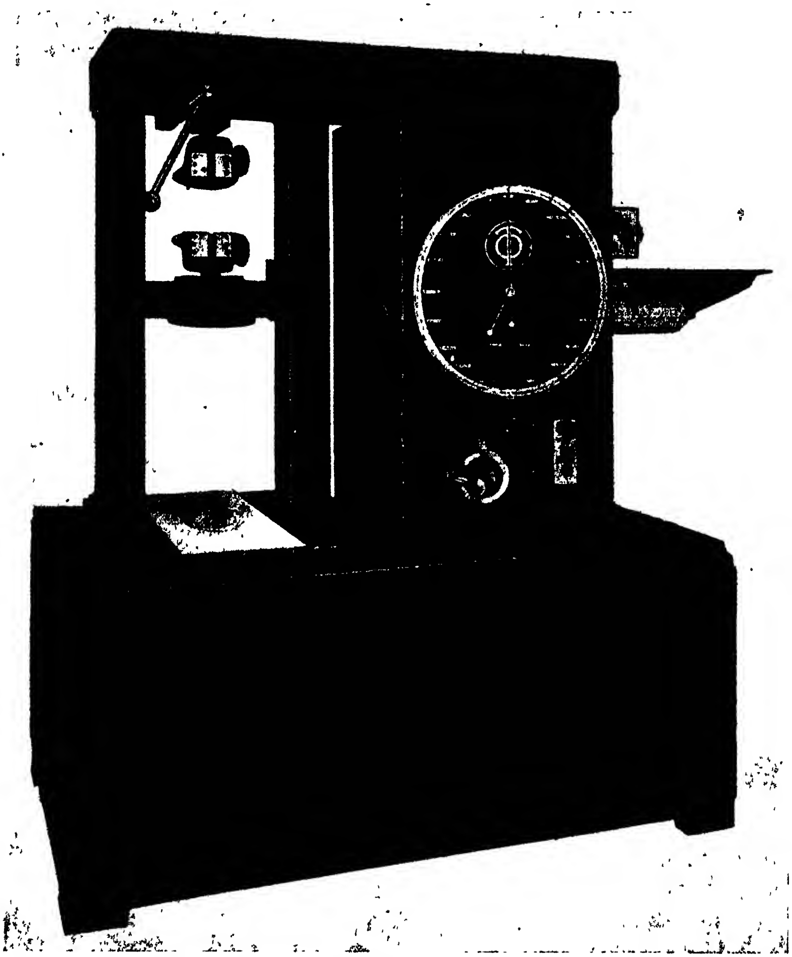

Fig. 440. The Olsen "Plastiversal" Type Testing Machine

Other machines designed for plastic material testing include a self-recording stiffness tester, known as the Olsen-Tour-Marshall type, which utilizes the principle of cantilever bending and gives load-deflection readings or graphs; Charpy and Izod impact testers; viscosity or flow tester with variable temperatures and pressures; and a distortion tester for measuring the distortion of a plastic material under different temperature conditions.

In regard to methods of making *hardness tests* on plastic materials some information on this subject is given on pages 247 and 248.

Impact tests and testing machines are considered on pages 351 to 353.

CHAPTER XVI

OTHER METHODS OF STRESS DETERMINATION

In numerous examples which occur in practice it is often inconvenient, expensive, or impossible to determine the behaviour of certain members, bodies, or structures under loads as applied in testing machines, so that indirect methods have to be devised.

The method of making a scale model of the structure in the same material and loading it under similar conditions should be mentioned. In certain instances much useful information can be obtained by making small-scale models of beams, struts, and ties, and measuring the deflections under loads and noting their manner of failure. The characteristics of the materials used for the models should be similar to those of the full-sized structures or members.

Scale-model Tests

The author has made a number of scale-model tests upon built-up struts and aeroplane wing spars, and was able to predict with accuracy the breaking loads of the full-sized members, which were subsequently made and tested to destruction. From preliminary direct tensile and compressive tests the ultimate strengths were known, and the crippling and buckling loads were referred to these values. The manner in which different designs of built-up struts and beams failed was investigated, and places of weakness were strengthened until the maximum strength for weight was attained.

The Strain Method

The stresses in certain complex structures may often be deduced from measurements of the strains in different directions when loads are applied. An example* of the principle involved is illustrated in Fig. 441, which shows the values of the stresses at different distances from the neutral axis of a rolled-steel I-beam under load, as deduced from extensometer measurements of the stresses. In this case the bending moment was uniform over the length of beam investigated, and the stresses were within the elastic limit. The value of the elastic modulus for the steel used was 13,840 tons per sq. in.; obviously this method is only directly applicable to materials obeying Hooke's law of elasticity, unless the stress-strain relation is known.

The strain method has been applied to determine the stresses in bridges, ships, boilers, and in similar cases; in all such cases it is

---

* From "The Measurements of Stresses in Materials and Structures," by E. G. Coker, Cantor Lectures, 1914.

necessary to measure the strains over as short a length as possible, otherwise the stresses deduced will not be directly applicable.

For complex structures and for surfaces of various shapes, such as boilers, it is often convenient to use mirrors attached to the surfaces, and to arrange for their angular changes to be measured by means of reflected rays of light moving along a scale, or by telescopic observation; strains should be measured in at least two different directions. Special surface gauges are now available for such tests.

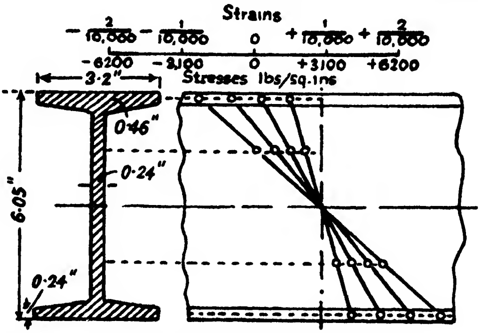

FIG. 441. THE STRAIN METHOD APPLIED TO I-BEAM

Another method of studying the behaviour of members and bodies under load is to make *a scale model in india-rubber*, and to measure the strains in different directions under load; it is well known that the distributions of stress in different elastic bodies of similar shape are the same within the elastic limits, so that the stress distribution in a body is deducible from that measured in a scale model of another elastic substance.

When india-rubber is employed,* owing to the slowness (usually several hours) with which the material yields or recovers, sufficient time must be allowed before the strains or deformations are measured.

From measurements of the strains in the directions of the principal stresses—that is to say, from the values of the maximum and minimum strains—the values of the principal stresses p and q may be inferred from the relations—

$$p = E\,(e_3 - \sigma e_2) \quad . \quad . \quad . \quad . \quad . \quad . \quad . \quad . \quad (1)$$

$$q = E\,(e_2 - \sigma e_1) \quad . \quad . \quad . \quad . \quad . \quad . \quad . \quad . \quad (2)$$

where E is the elastic modulus, σ is Poisson's ratio, and e_1 and e_2 the principal strains.

In the case of flat-surfaced members the values and directions of the principal strains may be obtained by marking the surface with

---

* See Vol. II of this work for the mechanical properties of rubber.

circles of appropriate size before loading, and measuring the axes of the elliptical shapes resulting from the load application. The surface, thus marked, may be photographed before and after loading.

This method has been applied* to determine the relative values of the stresses across a tension member having holes drilled in it; the effect of the presence of holes upon the stress distribution will be seen from Fig. 442 to be very marked.

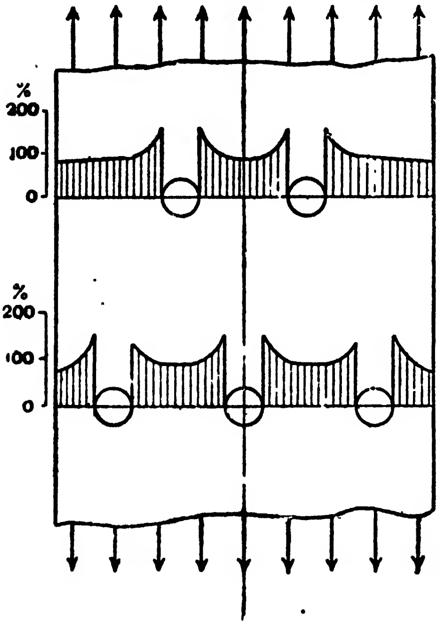

FIG. 442. THE STRESSES IN DRILLED PLATES

Near the edges of the holes the tensile stress is greatly increased, and there is a transverse compressive stress due to the rivet resistance.

The problem of the stress distributions in masonry arches and dams has been studied experimentally by means of strain measurements from scale models made of an easily deformable substance under light loads, such as rubber.

The Brittle Lacquer Coating Stress Method

A method which has been much used in the U.S.A. for stress analysis purposes consists in applying a coating of a specially-developed lacquer to the surface that is to be investigated. When dry the coating is brittle to some extent, and is such that if the surface is subjected to stress the coating will show its first "strain" crack at a definite elongation of the surface material. Usually, the first crack appears when the strain reaches a value between 0·0005 in. and 0·001 in. per inch. The strain causing the crack in the lacquer is arranged within the elastic limit of the metal under test.

A typical lacquer† used for this purpose is that known as "Stresscoat." This fulfils the general requirements of strain crack tests, but is sensitive to temperature and humidity conditions so that it is supplied in no fewer than twelve different grades to suit various laboratory

---

* By Messrs. Wilson & Gore. *Vide* Cantor Lectures, 1914.

† "Stress Analysis. Experimental Methods in America," *Autom. Engr.*, May, 1944.

test conditions of temperature and humidity. The lacquer is sprayed on to the test surface so as to give a coating about 0·003 in. to 0·005 in. thick. In order to determine the cracking sensitivity of the coating for a specific application a calibration test bar is coated with the lacquer at the same time as the test surface part and the two allowed to dry under the same conditions for about 12 hours. The calibration bar is then clamped at one end in a cantilever mounting and is deflected a known amount by a cam acting on the free end to produce a linear increasing stress distribution from the free end to the clamped portion. The bar is then placed in a strain scale and the minimum strain value necessary to start cracks in the lacquer is recorded. The value of this strain multiplied by the elastic modulus gives the value of the equivalent stress.

In order to facilitate observation of the first crack in the lacquer it is usual, before applying the lacquer, to give the test surface an initial coating of aluminium lacquer: the surface during the actual test is illuminated by oblique lighting as this has been shown to give the clearest indication of initial cracking. A permanent record of the crack or cracks can be obtained by treating the lacquer surface with a special dye which penetrates the cracks, and taking a photograph of the surface.

Full crack patterns obtained with the aid of the brittle lacquer are useful in certain instances since the lines are always normal at every place to the direction of maximum tensile stresses. In order to accentuate stress cracks in places where the strains caused by the loading are insufficient to crack the lacquer visibly, the test piece can be chilled whilst under load using a stream of cold air. Whilst the "Stresscoat" lacquer gives useful information concerning surface stresses it is, as mentioned previously, open to the criticism of being very sensitive to humidity and temperature changes. The thickness of the lacquer also affects the sensitivity so that a certain amount of skill is necessary when making quantitative tests. In general the accuracy of the test results is not very high, but the method affords a cheap and economical means of obtaining approximate stress values and stress patterns in complex loaded structures.

Experimental Determination of Bridge Stresses

In recent years there has been a marked increase in the number of bridges and framed structures in which the stress-distributions are not determinate from purely statical considerations, and are only ascertainable by laborious mathematical analysis methods.

To avoid this labour, and also the assumptions usually made to simplify calculations, models have frequently been used to ascertain experimentally the stress at any point of a structure. In most of these models, linear measurements of the deformations of circles on plane surfaces of models have been made; these increase in accuracy as the diameter of the circle decreases, provided the instrumental means are sufficiently accurate.

Professor Coker* advocates a different method, namely, lateral measurement of the change of thickness due to load, which involves no approximation beyond the assumption that the stress is uniform across the thickness at any point, and is especially useful at the edges of steel members, where the maximum stresses are usually found. At other points, mechanical measurements on the actual member combined with optical measurements on models are suggested, or, alternatively, on the latter alone.

In complete structures, especially of the indeterminate class, and capable of representation by a plane model, it is suggested that the usual process of designing such structures can be shortened and laborious analysis avoided, which latter is often unsatisfactory on account of its approximate nature. In Professor Coker's method, the direct loads, bending moments, and shears are found experimentally at the required cross-sections by optical observations of the stress-distributions in a transparent model. These are then utilized to design a structure of corresponding form in steel, reinforced concrete, or other material.

Electrical Strain Gauges

Electrical methods of measuring the strains in loaded specimens or structures have been developed in recent years and applied to a wide variety of tests. Whilst in most instances the strain is measured or deduced from measurements of some electrical property of the strain gauge element, it is a simple matter to estimate the stress within the elastic limit from the well-known application of Hooke's law. The principle of these methods is that an electrical element securely attached to the surface of the test piece, will, when subjected to strain, change its electrical properties in a known manner. From the measurement of electrical changes the corresponding linear strain can then be estimated by the use of suitable formulae.

The four electrical properties employed in electric strain gauges are those of *resistance* (wire or carbon), *electromagnetic* (inductance), *capacity* aud *piezo-electric*. Of these alternative methods that of the wire resistance is the more widely used, on account of its comparative simplicity, compactness, and general convenience.

Hitherto, the *carbon resistance type* of gauge had been used. This takes the form of a flat carbon strip, usually about 1 in. square by

---

* "Some Experimental Methods for Finding the Stresses in Bridges and Framed Structures," Professor E. G. Coker, *Proc. Inst. Civil Engrs.*, 1929.

¼ in. thick, of about 25,000 ohms resistance provided with a backing of bakelized material for cementing it on to the surface of the test piece. Upon being subjected to tensile strain the resistance increases, so that measurement of the resistance under load affords a means of determining the strain.

The disadvantages of the carbon resistance strain gauge are: (1) Difficulty of bringing the resistor sufficiently close to the test surface; (2) marked decrease in strain sensitivity with increase of temperature; (3) inability to take sufficient power (watts) to enable high sensitivity strain measurements to be made.

The electric resistance wire type of strain gauge has now replaced the carbon resistance one, although the latter is useful for obtaining qualitative data on specimens subjected to dynamic as distinct from static loading.

The piezo-electric strain gauge is based upon the principle that a piezo crystal, e.g. quartz, tourmaline or Rochelle salt, when subjected to mechanical stress develops an electric charge on its surface. Thus, mechanical stress causes a potential difference across its faces, the value of which is proportional to the strain. Relatively large electrical effects are obtained for small strain values, but, as these gauges are not of the flat or surface type, they cannot readily be used for determining surface stresses. They are also affected by temperature changes and have not a convenient frequency response. They are used chiefly for frequency and relative amplitude determinations.

The Electric Resistance Wire Strain Gauge

In this type fine wire of resistance material is arranged in flat or grid-iron form between two insulating material "wafers," one of which is cemented on to the surface of the test member. When subjected to strain effects the resistance of the unit changes, the resistance being proportional to the strain. As the units can be made of small dimensions and extremely thin they are used for measuring the changes of surface stresses under direct or complex loading conditions. Thus, several gauges can be cemented on to different parts of a structural member, e.g. an aircraft wing surface, bridge girder or steam boiler, and the stresses measured simultaneously.

The electric resistance changes are usually measured by balancing the resistance in a Wheatstone bridge circuit, as described later, or by measuring the difference of potential for constant current flow through the resistor. The resistance unit is usually of the high resistance type and is made by winding wires of diameters from 0·0006 in. to 0·005 in. on a flat former. The resistance grid is placed between two layers of synthetic resin-impregnated paper, in sandwich fashion, and the whole bonded by heat so as to form a flat wafer, usually of ¼ to 1

sq. in. area. The resistance materials used include nichrome, Brightray Eureka, Constantan, Minalpha, etc. The high resistance type of strain gauge usually has a total resistance of the order of 2000 to 10,000 ohms.

TYPICAL STRAIN GAUGE

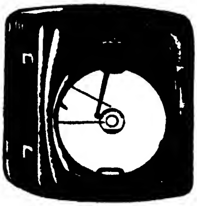

CONTINUOUS CIRCULAR TYPE STRAIN RECORDER

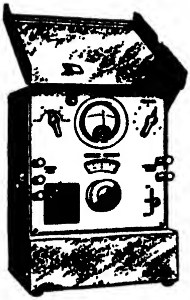

PORTABLE STRAIN INDICATOR

FIG. 443. TYPICAL STRAIN GAUGE APPARATUS
[SR-4 Type Baldwin Southwark Division, U.S.A.]

It should be mentioned that the low resistance type of strain gauge is favoured in America, wires of 0·002 to 0·001 in. made of Copel,

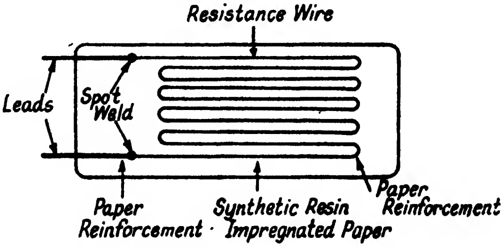

FIG. 444. WIRE WOUND ELECTRIC RESISTANCE STRAIN GAUGE

Isolastic or Advance being used for the purpose. The resistance of these gauges ranges from 50 to 400 ohms.

Fig. 444 illustrates the method employed in a widely used form of strain gauge; the connecting leads are soldered or spot welded to the ends of the grid wire. By using bakelized thin paper covers it is possible

to obtain units of only 0·005 in. thickness, which will readily flex so that they can be cemented on to curved surfaces.

Another method which has been used is to wind the fine resistance wire on to a paper-covered mandrel in a series of close-pitched spirals with a few coarse-pitched spirals between, so as to obtain a number of resistance units. The paper tube is then removed from the winding mandrel and pressed flat to the wafer form. Afterwards the units are separated by cutting at the coarse-pitch places.

Strain Sensitivity

The ratio of the change in specific resistance in ohms per ohm of its original resistance to the unit strain in the material is termed the *strain sensitivity* of the gauge. Thus, if a unit strain causes a change *dR* in the original resistance *R*—

$$\text{The strain sensitivity } S = \frac{1}{e} \cdot \frac{dR}{R}$$

This relation can also be expressed in terms of Poisson's ratio σ, and the change $d\rho$ in specific resistivity of the wire ρ as follows—

$$S = (1 + 2\sigma) + \frac{1}{e} \cdot \frac{d\rho}{\rho}$$

It has been shown that whilst S is constant up to a limiting strain value, its value varies between about 1·0 and 3·0 for electrical strain gauges. For a Poisson's ratio of 0·3 the theoretical value of S is about 1·6 for most metals, but it should be pointed out that there is, at present, very little data in regard to the value of Poisson's ratio for the very small diameter wires used in strain gauges, e.g. nichrome wires of 0·001 in. diameter which are employed in modern gauges of this type.

With the former type of strain gauge using five wires of about 0·001 in. diameter a typical strain sensitivity value of 2·2 was obtained,* and it was possible, from the measured strains, to estimate stress increments of less than 250 lb. per sq. in. in steel in stress applications of the order of 20,000 to 40,000 lb. sq. in.

The principle of the method employed for measuring the strains with this device is that of the Wheatstone bridge, shown in Fig. 445, in which the electrical strain gauge resistance fixed to the test member is shown at *C*, whilst *A* and *B* are similar strain gauge resistances. The resistance in the arm *D* is a compensating strain gauge resistance fixed by adhesive to similar material to that of the test member, but in an unstrained condition. *E* is a precision variable resistance box

---

* "Wire Wound Electrical Resistance Strain Gauges," S. F. Dorey, *The Engineer*, 12th May and 19th May, 1944.

(0 to 1111 ohms reading to 0·1 ohm), and F is a cathode ray oscillograph used to indicate very accurately when the bridge is in balance. The sensitivity is such that when balanced, a resistance change of 0·05 ohm in 3000 ohms is readily indicated; this corresponded, in the strain gauge employed, to a stress increment of less than 250 lb. per sq. in. The values of the resistances A and B were 2500 and 2730 ohms, respectively, and of D about 3000 ohms.

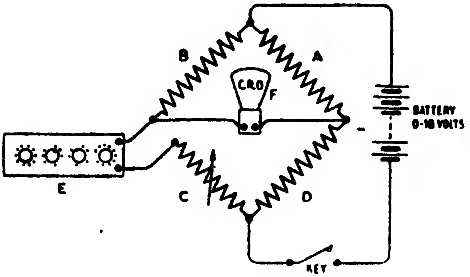

FIG. 445. CIRCUIT ARRANGEMENT FOR ELECTRICAL RESISTANCE STRAIN GAUGE

In view of the fact that the resistance of metallic wires changes with the temperature it is necessary to employ some convenient means of compensation. This is possible in the design of the gauge so that there is no change in resistance with temperature variation. In this connection as a measurement of temperature compensation a term known as the *stress equivalent of temperature* is used. It is defined as the stress in the specimen, to which the gauge is attached, necessary to cause the same increase in the resistance of the gauge as 1° C. rise in temperature.

The temperature effect can be compensated for by using an identical but unstrained gauge mounted on the same material and kept at the same temperature as the specimen under test. This compensation gauge unit is arranged to form the arm B of the Wheatstone bridge (Fig. 445). In regard to the method of attachment of the strain gauge, it is necessary to use a special adhesive, such as hot-setting vacuum wax, known as W.E. Wax No. 6. For temperatures above about 120° C. special adhesives unaffected by the temperature range changes must be used.

A strain gauge of the resistance type was developed by the Philips Electric Co. of Zurich.* It consists of a thin strip of insulating material, the ends of which are silver plated and serve as connections for the current leads. By means of a drawing pen holding very fine carbon powder in liquid suspension a line about 1 mm. diameter is drawn on the strip connecting the silvered ends. On subsequent drying, a carbon resistance element of about 10,000 ohms is obtained which is cemented on to the specimen undergoing test and covered with cellulose varnish. Changes in dimension of the test piece produce corresponding

---

* "Electrical Extensometers," O. Stettler, *Flugwehr & Technik*, Vol. 4, No. 8, August, 1942, pp. 212/214.

changes in resistance which can be measured on an alternating current bridge using a pentode valve as tuning and indicator (electric eye). This method is applicable, for example, to the steady conditions underlying the normal test. Alternatively, periodic phenomena can be investigated by supplying a steady voltage to the strip and recording the change in voltage drop by means of a cathode ray oscillograph. Thus records can be obtained of the damped vibrations of a bar under torsion or of the stressing in the main bearing bolts of an engine under load.

It is stated that these resistance strips maintain their calibration over a prolonged period and have practically a linear connection between extension and resistance change for specific extensions up to 0·05 per cent.

Other Applications of Strain Gauges

Electrical strain gauges can be used for measuring stresses in different directions, and thus *complex stress systems* become capable of analysis, in so far as the results of surface measurements are applicable. One particular application is that of measurements of complete stress states in sheet materials, such as *the coverings of aircraft wings and fuselages*, but in such investigations owing to the possible variations of surface strains on the front and back of the sheet it is necessary to use a gauge or gauges on each side. As an example, the results of tests made on a metal sheet under slight buckling conditions—similar to those occurring under flight conditions in aircraft—are given in Fig. 446.* The resultant shear stresses have been computed from the strains measured in three directions at 60° (known as the *strain delta*) on both sides of the metal by means of strain gauge "rosettes." It will be observed that, owing to the buckling or bending effect, the stresses on the front and back surface of the metal are very different; the actual shear stresses are here taken as the mean values.

It is not possible, owing to space considerations, to deal more fully with the subject of electrical strain gauges. For fuller information the reader should consult the footnote references and also a useful account given in the references† below.

Compression, Bending, and Shear Tests

The electric resistance strain gauge can be used equally well for determining compressive strains, since the same principle of resistance variation with strain is applicable.

---

* "Stresses in Aircraft Structures," *Autom. Industries*, 1st June, 1942.

† "The Development of Electrical Strain Gauges," A. V. de Forest and H. Leaderman, *N.A.C.A. Tech. Note*, No. 744, January, 1940. "Electrical Strain Gauging," C. G. A. Woodford, *Aircraft Production*, May, 1944.

Bending stresses can also be determined by affixing strain gauges to opposite sides of the member under bending load, so that surface tensile and compressive strains are measured.

Shearing stresses can be measured by a combination of two gauges affixed to the surface in such a way that tensile and/or compressive stresses causing the shear are indicated. Thus, by combination in the two adjacent arms of the electrical measuring bridge the readings are arranged to measure the pure shearing stress in a plane bisecting the angle between the two simple stresses.

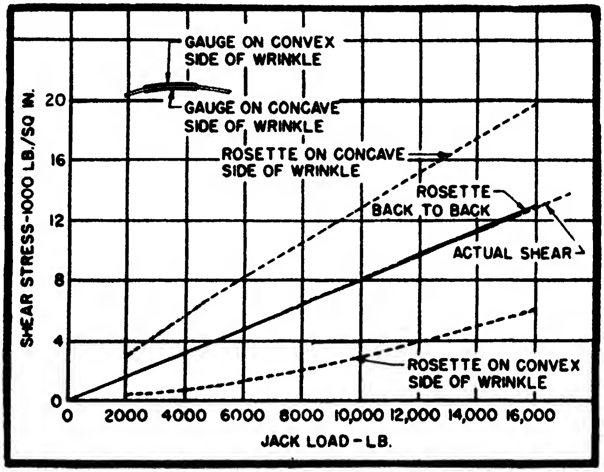

FIG. 446. STRAIN GAUGE MEASUREMENT RESULTS, SHOWING SHEAR STRESSES FOR GIVEN LOAD APPLICATIONS ON THE CONVEX AND CONCAVE SIDES OF METAL SHEET (THE TRUE VALUE OF THE SHEAR IS ALSO SHOWN)

Similarly, torsional stresses (shear) can be measured in the case of a rotating shaft using rotating slip rings to make the connections between the four ends of the two resistance units and the measuring bridge. Records of strains occurring in rapidly loaded structures, such as aircraft members in flight, engine mountings, etc., are made by recording the potential differences across the strain gauge resistors, under constant current conditions. Usually a series resistance is employed and the gauges are connected in turn with the recording apparatus; the latter is some form of oscillograph, e.g. cathode-ray or Duddell electro-mechanical, or a special form developed for the particular purpose.

The Thermal Method

Another method occasionally employed for determining the stress at a given point (as distinct from the value deduced from the strain over a definite distance) depends upon the change of temperature resulting when stress occurs; within the elastic limit there is a fall in temperature which is proportional to the tensile stress applied and to the coefficient of expansion, according to the relation—

$$t = \frac{T \,.\, \alpha}{J s \rho} \,.\, p,$$

where t is the small fall in temperature accompanying a small tensile stress increase p, T the normal temperature (absolute) at the spot, α the coefficient of expansion, J the mechanical equivalent of heat, s the specific heat, and ρ the density.

The change in temperature is, however, very small for ordinary stresses, being about 0·12° C. per 10,000 lb. per sq. in. for steel, so that accurate methods of temperature measurement have to be used. Thermo-electric couples such as those of bismuth-antimony, employed with suitable galvanometers, can be made to indicate temperatures to 0·001° C., and are therefore generally employed for this purpose.

Beyond the elastic limit in tension there is a more marked temperature rise, which necessitates the use of a different temperature scale; the shear stress, moreover, within the elastic limit does not appear to be accompanied by any temperature change, so that this somewhat simplifies matters. This method, which is, however, not a convenient (although a useful laboratory) one for commercial purposes, has been used* to determine the stress distributions in model beams, girders, and joists of various sections.

Optical Stress Determination Methods

An interesting optical method of determining stresses is based upon the discovery of Sir David Brewster's in 1816 that when a beam of plane polarized light is passed through a stressed transparent plate or body, and the beam is viewed through a Nicol prism or projected through it, a remarkable colour effect is apparent, from which the directions and intensities of the principal stresses may be deduced.

This method has in later years been developed and utilized for the solution of complex-stress problems by Coker,† Filon,‡ A. R. Low,|| and others.

The effects observed depend upon the property acquired by the transparent material, under load, of doubly refracting the light passing

* See "The Measurement of Stresses in Materials," by E. G. Coker, p. 15, Cantor Lectures, 1914, *Journ. of Roy. Soc. of Arts.*

† *Engineering*, 6th January, 1911; 3rd March, 1912; 13th December, 1912; 28th March, 1913; Cantor Lectures, 1914, "Photo-elasticity for Engineers," *Proc. Inst. Autom. Engineers*, November, 1915.

‡ *Phil. Mag.*, 1912; and *Proc. Camb. Phil. Soc.*, vols. xi and xii.

|| "Stress Optical Experiments," by A. R. Low, *Aeron. Journ.*, December, 1918.

through it. The effects are not observed in the case of ordinary light, which may be regarded as consisting of transverse vibrations in all planes, and in order to examine the effects of double refraction it is necessary to rob the light of all of its transverse vibrations except those in one plane by passing the beam through an Iceland spar prism.

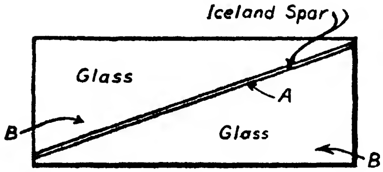

FIG. 447

Fig. 447 shows how a thin plate of Iceland spar *A*, suitably cut in relation to the crystallographic axes and mounted between glass wedges *B*, results in a perfectly satisfactory polarizing arrangement; this is practically as good as the solid spar prism used by Nicol. The beam of light from this prism is necessarily of small dimensions, as these prisms are small in size. Alternatively, thin polarizing surfaces, known as Polaroid ones, can be employed.

The beam of light (Fig. 447A) is caused to pass through a prism of Iceland spar *A*, cut in a particular manner; this prism polarizes the light—that is, it allows only those transverse vibrations parallel to its principal plane to pass through it—so that the emergent beam *B* has transverse vibrations in one plane only. *C* denotes a piece of transparent material stressed in its plane, which is normal to the beam of light, and the effect of passing a beam *B* through such a plate is to divide it up into two plane polarized waves *D* and *E*, which have the same directions as those of the principal stresses in *C*, but which differ in phase by an amount which is proportional to the difference between the principal stresses *p* and *q* in the transparent stressed material, to the thickness of the stressed plane, and to the particular material employed. In order to observe the optical effects of these two mutually perpendicular transverse wave systems, a second polarizing prism *F* is employed, having its principal plane at right angles to that of *A*.

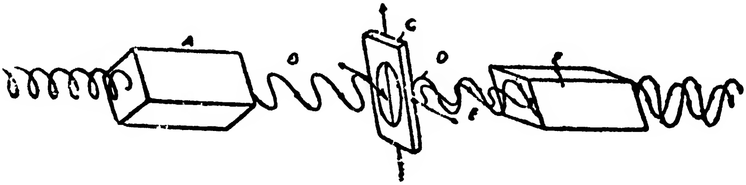

FIG. 447A. PRINCIPLE OF THE OPTICAL METHOD OF STRESS DETERMINATION

The interference effects of the two wave systems *D* and *E* are then observable by the increased intensity of the light at some places of the stressed plate and by the decreased intensity of other places, when a beam of monochromatic light is used. When the stressed plate is viewed with ordinary white light, the mutual interference of the waves *D* and *E*, after passing through the polarizer *F*, is evident in the marked colour effects seen over the stressed specimen.

The dark spots produced when the specimen is viewed through a polarizer occur at places where the directions of principal stress correspond to the principal planes of the polarizers *A* and *F*. By rotating the perpendicular combination *A* and *F* the whole specimen may be mapped out into a series of dark spots or lines, denoting the positions of the axes of principal stress for the whole of the specimen; in this manner the principal stress directions can be obtained for the stressed specimen.

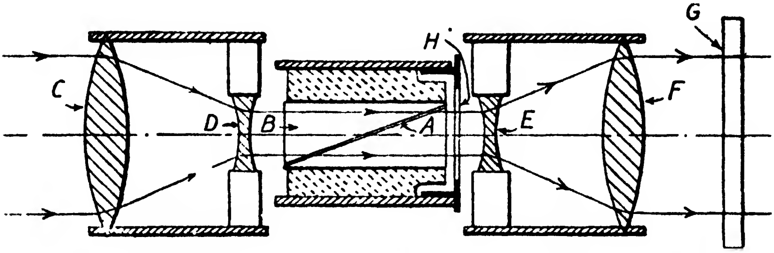

FIG. 448. SHOWING OPTICAL ARRANGEMENT TO OBTAIN A WIDE POLARIZED BEAM OF LIGHT

In order to obtain a fairly wide beam from the polarizing prism it is necessary to use a system of lenses. This consists of two separate parts, namely, a lens combination in front of the prism to contract the relatively large beam from the light source, and a somewhat similar but reversed lens combination, behind the prism, to expand the beam from the prism. Thus, in Fig. 448, illustrating an arrangement used by Coker* and Kimball, a beam of ordinary light from an electric arc lantern passes through the double convex lens *C*. The cone of rays thus formed is rendered parallel by the double concave lens *D*, whence it passes through the polarizer *AB*. The beam is then expanded by the inverse combination *EF*. The transparent model to be examined is shown at *G*. When it is desired to convert this plane-polarized beam into a circularly polarized one, a quarter waveplate of mica *H* is employed, as shown.

The polarizing prism must be adjusted in position in relation to several other optical and mechanical devices used, generally, so that the stress effects in the model can be compared with those observed

---

* E. G. Coker, "Engineering Problems Solved by Photo-elastic Methods," *Franklin Inst. Journal*, October, 1923.

in a loaded tension member by projecting both on to a screen or photographic colour plate.

Fig. 449 shows a suitable arrangement employed by Professor Coker. In this case the parallel beam emerging from the polarizer passes through the model *G* and is then reduced in size by a lens *H*; it is then brought parallel again by the second lens *I*, to allow observations on the comparator bar *J*. After passing through this the beam is brought to a conical pencil by a lens *K* in order to pass through the quarter waveplate *H′* and analyser *L*, and is finally received either on the screen *M* or on a photographic plate.

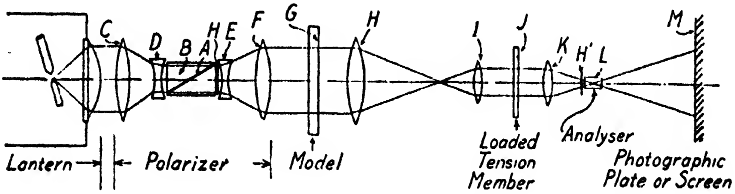

FIG. 449. COKER'S OPTICAL ARRANGEMENT FOR POLARIZED LIGHT TESTS ON STRESSED MODELS

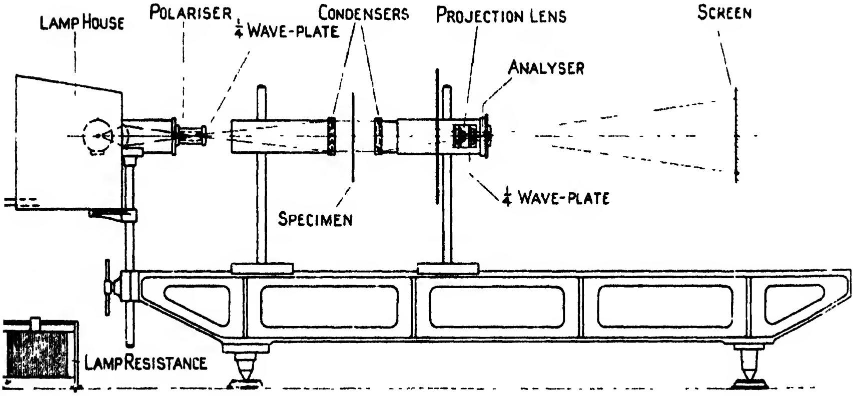

FIG. 450. THE HILGER COMMERCIAL APPARATUS FOR OPTICAL STRESS DETERMINATION

The simplest form of apparatus, such as that made by Messrs. Adam Hilger, London,* consists of a lamphouse, polarizer, quarter waveplate, condensers, projection lens, and analyser with quarter waveplate (Fig. 450).

When measurements are to be made, certain additional parts are required. A complete apparatus for projection and measurement is now available.

* First marketed in 1929.

Results Obtained with Apparatus

At this stage it may be as well to recapitulate, to some extent, by outlining the general scheme of testing adopted, and to show the uses of the apparatus.

At any point in a plane section, the resultant stresses due to any system of loading can be represented by two "principal" stresses which always set at right angles.

The object of the apparatus is to measure the direction and magnitude of these principal stresses.

How the Stress is Indicated

If the quarter waveplates are removed and a specimen cut from a sheet of transparent celluloid is placed between the condensers of the projection set and stress is applied to it, a number of black bands will generally be seen on the screen image. The centre of the black bands indicates the direction of the stress.

If the quarter waveplates are replaced, the black bands disappear and the image of the specimen will appear coloured. The order of the colours indicates the distribution of the stress.

Direction of the Principal Stresses

If a stressed specimen cut from transparent celluloid is placed between a polarizer and analyser, black bands will be seen on the projected image of the specimen.

Everywhere along the centres of the black bands the direction of the principal stresses will be parallel and at right angles to the plane-polarized light, produced by the polarizer.

If the specimen polarizer and analyser are rotated through any angle, a new set of black bands will be obtained, and everywhere along the centres of these black bands the principal stresses will be parallel and at right angles to the angle through which the polarizer and analyser are rotated.

Therefore, by rotating the polarizer and analyser to various angles, the direction of stress is at once indicated, and can be mapped out all over the specimen. No other measurement whatever is required.

Distribution of the Stress

If the quarter waveplates are now inserted so as to produce circularly polarized light, the projected image of the specimen will appear coloured according to the stress intensity at every point.

The colours everywhere indicate the difference of the principal stresses $(p - q)$. All along free edges of the specimen (where one principal stress becomes zero) the colour effect indicates at once the value of the stress, and since the greatest stress is generally at an outside edge, this information is usually all that is required. The value of the edge stress is obtained by stressing a tension piece (cut from the same material as the specimen) in the calibration frame, the projected image of the tension piece being superimposed upon the image of the specimen over the point to be measured either along or at right angles to the boundary edges to be measured. Stress is applied to the tension piece until the projected image of the point to be measured is reduced to black; the stress so applied gives at once the value of the stress at the point.

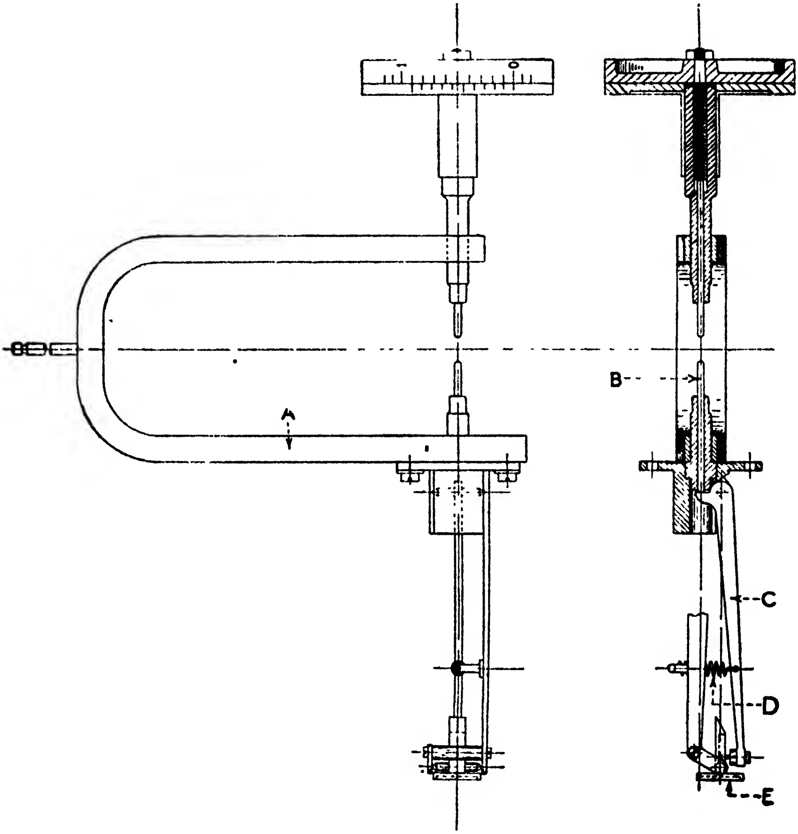

FIG. 451. THE LATERAL EXTENSOMETER FOR MEASURING LATERAL CHANGES OF TENSION SPECIMENS

The method of obtaining the value of the principal stresses $(p - q)$ for interior points is carried out by either of the following methods—

(1) By direct calculation from the curvature of the principal lines of stress.

(2) By measuring the change in thickness of the specimen which is proportional to $(p + q)$, the value of $(p + q)$ being obtained by calibrating the test piece to obtain the value of the stress corresponding to a given change of thickness.

The second method, which involves the use of a lateral extensometer, is the one adopted by Professor Coker.

The Lateral Extensometer

This apparatus, for obtaining the value of the principal stresses $(p - q)$, is illustrated in Fig. 451 which shows the extensometer and its universal stand.

The main frame (A) of the extensometer is U-shaped to allow measurements to be made as much as 3 in. from the edge of a plate. It carries a calibrating screw and drum or one limb, with its point resting against the specimen. The other limb carries a needle (B), the inner end of which touches the specimen at a point immediately opposite the calibrating screw, while the outer end rests against the short arm of a bell-crank lever (C), against which it is kept in contact with the needle by the spring (D). The long end of the lever controls the angular position of a pivoted mirror (E), on which a spot of light is directed from a lamp, and the reflected image of a cross-wire is projected on to a suitable screen.

The thickness of the piece which can be tested is normally from 0 in. to $\frac{3}{4}$ in.

The instrument described, it will be seen, is for measuring the lateral contraction of ordinary tension specimens; it enables the lateral changes at points a few thousandths of an inch apart to be measured with comparative ease.

Transparent Models and Actual Structures

Since the whole object of the polarized light method of analysing stresses in loaded structures is to be able to apply the results to the design of actual structures, it is obviously necessary to know whether one can make such general deductions from tests on small transparent models, and, if so, how far one may rely on the stresses observed in the latter case applying to the stresses in the actual element of the machine or structure.

Although details of the mathematical investigation of the problem are outside the scope of this elementary work, it can be stated that the results of analytical investigations made by Coker, Filon, and Mesnager prove that in general the identity is complete if the laws of similarity between the model and structure are observed.

It has been shown conclusively that, under the latter conditions, the stress systems produced in bodies of different materials are precisely the same within the limits of elasticity of each material when the body is enclosed by a single boundary, or in which the loads on separate boundaries are themselves in equilibrium.

The stresses obtained are independent of the elastic constants, so that experiments on transparent models enable direct inferences to be made as to the stresses in actual structures.

Application to Different Metals

This method of ascertaining the stress distribution has been shown to give reliable results when the elastic properties of the transparent material are similar in effect to those of the metal to be investigated. For metals such as steel and iron, which vary from the elastic to the plastic states when stressed beyond the elastic limit, nitro-cellulose is a good optical material. For brittle metals, such as cast iron or hardened steels, glass is suitable, as it possesses similar elastic properties.

Some Practical Applications

This optical method has been successfully applied to the experimental solution of the problem of the stresses over a drilled plate tested in tension; the stresses in loaded hooks and rings; the stresses in loaded crankshafts: the distribution of stress in a large compression block loaded over a relatively smaller definite area and the design of the eye-pieces of tension members or stays.

In many cases the photo-elasticity method has been applied to solve stress problems impossible of mathematical analysis; in other instances, the method has given the complete answer to complex stress distribution problems in a very much simpler manner than the analytical one.

Mention may here be made of the successful applications, by Professor Coker, of the photo-elasticity method described to the solution of problems of stresses due to shrinking a flywheel on a shaft and to fluid pressures in thick cylinders.

The distribution of stresses in a split piston ring, as used in internal combustion engines, is another typical example. The stresses in dovetail joints, pins, or rivets in a plate, eye-bars and connecting-rod ends, contact stresses, stresses in discs and thin plates, and the stresses in and due to cutting tools, are among other more recent applications of the photo-elasticity method of solution.

The original papers given in the bibliography at the end of this chapter should be consulted for details of the various applications. A few typical examples from the results of Professor Coker's investigations are given here to enable a general idea of their wide and useful field to be ascertained.

Fig. 452 shows the values of the tangential stresses at the boundary lines of a drilled flat plate tension specimen obtained by the above method; the height of the ordinates normal to the boundaries is proportional to the tangential stress occurring there. The marked increase in tensile stress in the vicinity of the section through the hole perpendicular to the line of pull will be noted, and also the compression stress at the top and bottom of the hole.

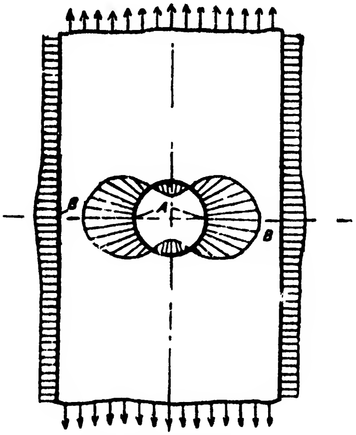

FIG. 452. TANGENTIAL STRESSES IN DRILLED TENSION MEMBER

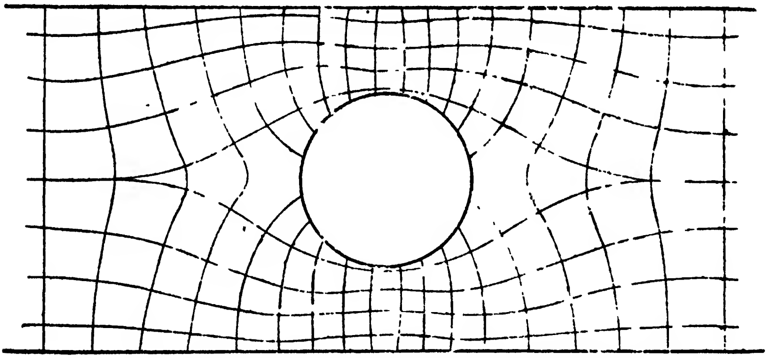

FIG. 453. PRINCIPAL STRESSES IN DRILLED TENSION MEMBER

Fig. 453 shows the lines of the principal stresses in the preceding case, as mapped out by the optical method described; it will be seen that the lines approach one another at the minimum section, and that they are also spaced unequally. Where the lines are close together there is a higher intensity of stress; for example, at the boundary of the hole. It will be noted that everywhere the two sets of stress lines are mutually normal wherever they intersect.

Fig. 454 shows the stresses in the fillets of a loaded crankshaft obtained by the optical method, the intensities of the stresses being found by placing a tension member across or along the contour and loading it until a black field is produced; this is an indication of the stress equality in the two members. The two sets of lines, or curves, shown in the diagrams are for a single and a double load, respectively; the values of the maximum stresses at the two places shown are greater than those calculated upon the ordinary beam assumptions.

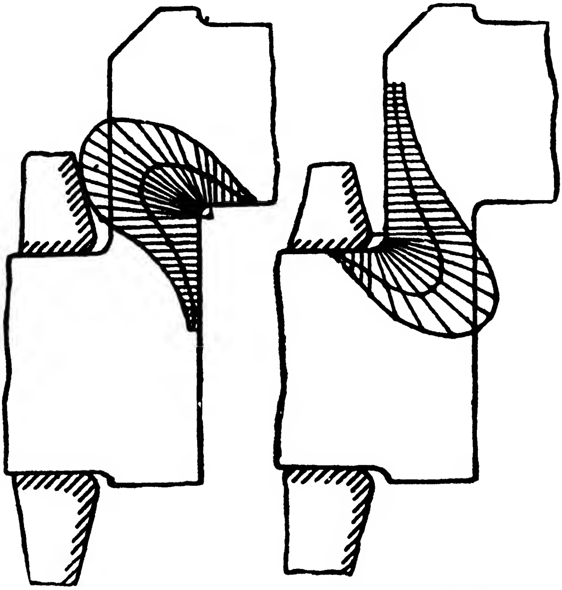

FIG. 454. STRESSES IN CRANKSHAFT FILLETS

Application to Test Piece Stresses

The photo-elastic method has been applied to the determination of stresses in tensile test pieces having semicircular notches in the sides.

Tests made by Professor Coker show that there is a very uneven stress distribution over the central, or narrowest, section. In the example illustrated in Fig. 455 (left) the test piece was four units wide with two circular arc notches of one unit radius.

The polariscope shows a coloured band system indicating a complicated stress distribution as shown in the left-hand diagram in Fig. 455. At the central section *AA* the principal stresses *p* and *q* are as shown in Fig. 455. Here the axial stress is indicated by *P* and the cross-section stress by Q. It will be seen that the former stress is a maximum near the edge and a minimum at the centre; the latter stress is zero at the contours, but rises to maximum values at or near the centre.

If one examines the stresses around the semicircular contours, the distribution is as shown in the right-hand diagram in Fig. 455.

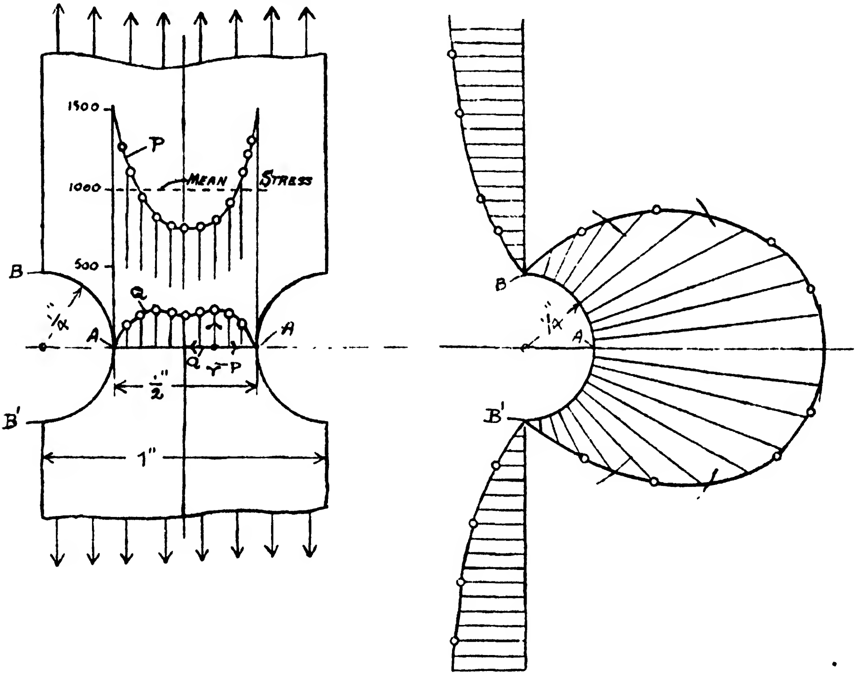

FIG. 455. SHOWING RESULTS DEDUCED FROM POLARISCOPE METHOD ON A CIRCULARLY-NOTCHED TENSILE TEST PIECE

The results indicate that a test piece of this form is quite unsuitable for tension tests.

It can be shown by the polariscope method that, by making a parallel portion between the quarter-arcs, the stress distribution becomes uniform over the central part of this parallel portion (Figs. 456 and 457). The lengths of the parallel portions of test pieces, recommended by the B.S.I., can be shown to give uniform tension results over the central portions.

An interesting point brought out by these tests is that the smaller the radius of the fillet, the greater is the length in pure tension, but this is accompanied by proportionately higher stress at the fillet. The maximum stress at the fillet is always appreciably larger than the mean tension, and becomes so great with small radii that a brittle specimen tends to break at this section, owing to the fact that the elastic stress distribution tends to continue right up to the breaking point. In a ductile specimen, however, the distribution changes rapidly and tends to equalize after the yield point is passed.

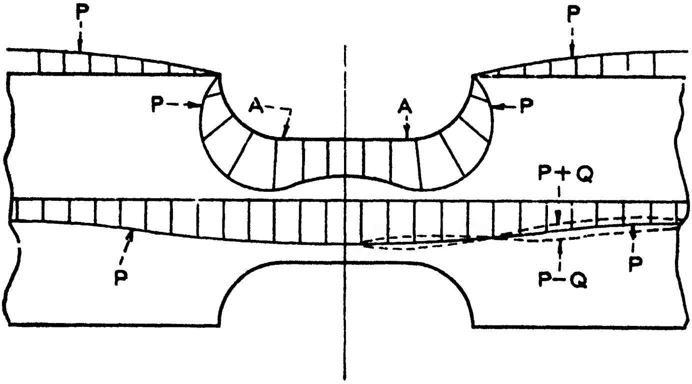

FIG. 456. STRESS DISTRIBUTIONS ALONG AXIS AND EDGES OF TENSILE TEST SPECIMEN

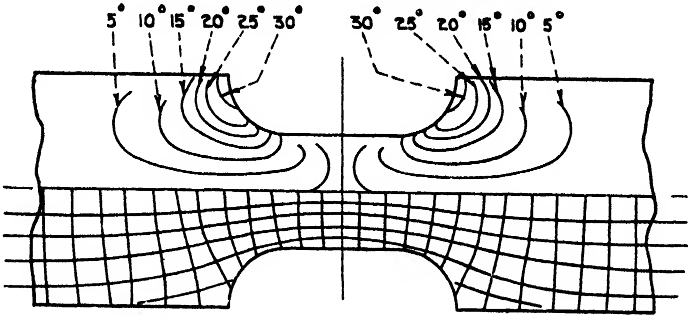

FIG. 457. SHOWING PRINCIPAL STRESSES IN THE CASE OF TENSILE TEST SPECIMEN OF FIG. 456

It will be noticed that in the narrow part the stress tends to become a maximum at the edges, but in the wider part it becomes a maximum at the centre. There is also a marked change in the stresses about the radial portion of the test piece.

It has been found, in the case of circular tension test pieces, that the complex stress tends to penetrate farther into the regions of the gauge length than with flat test pieces of the same contour.

Fig. 456 also shows the distribution of stress along the central longitudinal axis, but this cannot be obtained from the observations made with circularly polarized light alone. These observations give the values of $(P - Q)$ indicated by one of the dotted lines shown on the right half of the figure. In addition to these, values of $(P + Q)$ must be determined, for which purpose changes of thickness produced by loading the specimen are measured by means of the lateral extensometer. The extensometer is usually calibrated by measuring the change of thickness of a simple tension member, cut from the same sheet as the specimen, when subjected to known loads. In this instance, however, the extensometer could be calibrated by measuring the change of thickness near one end of the specimen itself, where the tensile stress is uniform. The values of $(P + Q)$ at points along the longitudinal axis, as determined by the extensometer measurements, are shown in the second dotted line on the right side of the figure.

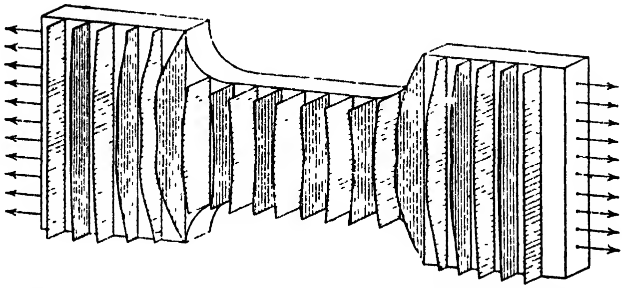

FIG. 458. SOLID DIAGRAM OF STRESSES IN TENSILE TEST PIECE

The full line drawn midway between the two dotted lines evidently represents, by its distance from the central line, the value of the longitudinal stress P at any point in that line. The lateral stress Q at any point in the centre line is represented by the corresponding distance between the full line and either of the dotted lines. In the wider parallel portions of the specimen, beyond the intersection of the two dotted lines, the specimen is in *compression* across the central longitudinal section, Q having negative values. In the constricted portion of the specimen there is an appreciable *tension* across the central longitudinal section, except over a very short distance on either side of the middle point. The existence of these lateral stresses across the central longitudinal section can be deduced, also, from consideration of the curvature of the stress lines in Fig. 457.

The values of $(P - Q)$ and $(P + Q)$ can be determined by similar methods for any point in the specimen, and P and Q can be separately evaluated either graphically or by calculation. Diagrams of various types can be drawn to represent the results obtained. Thus, the "solid" diagram, or model, shown in projection in Fig. 458 indicates the distribution and intensity of the principal (longitudinal) tensile

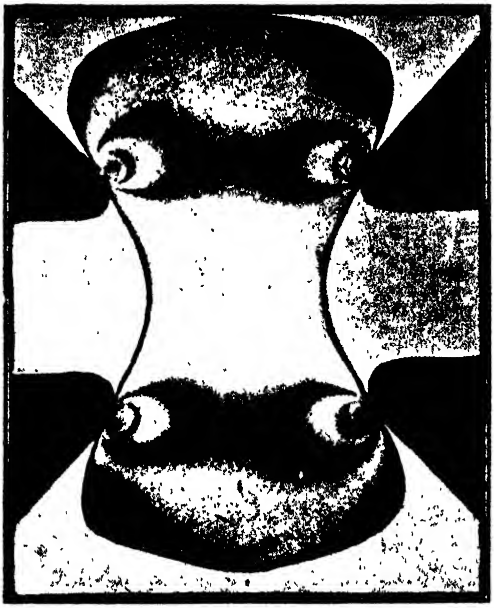

FIG. 459. STRESS DISTRIBUTION IN CEMENT TEST PIECE, SHOWING HIGH STRESS VALUES AT POINTS OF CONTACT WITH THE TEST SHACKLE

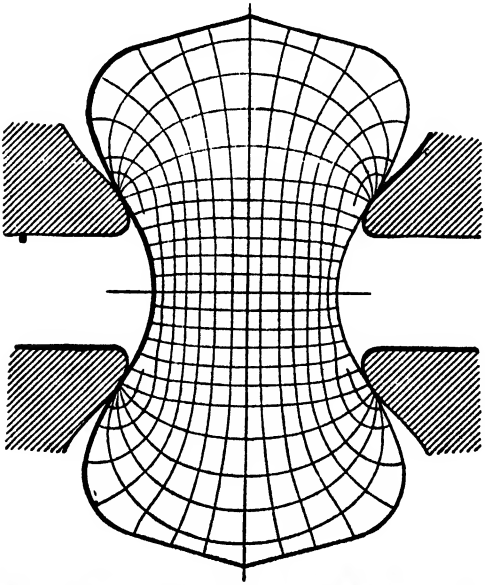

FIG. 460. STRESS DISTRIBUTION CURVES DEDUCED FROM POLARISCOPE TESTS ILLUSTRATED IN FIG. 459

stress across various sections perpendicular to the long axis of the specimen examined.

The simple test piece example shown in Figs. 456 and 457 illustrates most of the important features usually encountered. An application of the principles indicated will enable the *stresses in a plate structure* of any shape and loaded in any manner in its own plane to be completely analysed.

Cement Test Specimens

The polariscope method applied to British and French standard cement briquette test pieces indicates a serious lack of uniformity in the stress distribution at the centre section, resembling somewhat the results shown in Fig. 459; to overcome this defect a parallel portion at the centre has been suggested.

Pins and Rivets in Plates

The stress system, due to a loaded pin or rivet in the hole of a plate, may be much more complicated than the usual simple assumptions of stress and strain, made by engineers, indicate.

In view of the importance of this type of joint or connection, it may be of interest to reproduce diagrams obtained by the photo-elastic method, in the case of a pin-plate combination.

Results of a photo-elastic investigation by Professor Coker of the stresses in a pin-loaded eye-bar are shown in Figs. 461 and 462.

The diagram in Fig. 462 shows the lines of principal stress, whilst Fig. 461 indicates the stress distribution at the principal cross-section.

It will be observed that the maximum intensity of stress rises to very high values at the pin. Further, if the pin is forced into the hole the stresses are increased still further. The high stress intensity at the pin in the line of the cross-section falls very rapidly until it reaches a zero value near the outer contour, at which place a small compression stress occurs.

Stresses Due to Cutting Tools

An interesting application of the photo-elastic method is that of determining the action of glass and steel tools when cutting transparent materials.

An investigation undertaken by Professor Coker, at the request of the Cutting Tools Research Committee of the Institution of Mechanical Engineers, has yielded some important results. It is not possible to describe the apparatus or details of the method owing to limitations of space, but the reader will find a fuller account in the paper mentioned in the fourth footnote on page 593.

The transparent material was mounted in a slide-rest of the test apparatus, the leading screw of which was rotated through gearing by a small motor. The tool was fixed, and the transparent material moved past it.

Fig. 463 shows the general appearance, under the polariscope viewing and photographing apparatus, of the material and a chip cut from it. The bands in the material just below the point of the tool indicate the stress distribution, whilst the complex shadings in the shaving* show that there are some intense permanent stresses; these, however, are less than those produced at or near the cutting edge of the tool, since there the colours disappeared entirely and a black patch (which can be seen in the illustration) was visible. This dark region remained stationary during the whole of the cut. The curling up of the shaving, it will be observed, has intensified the stress in the tail.

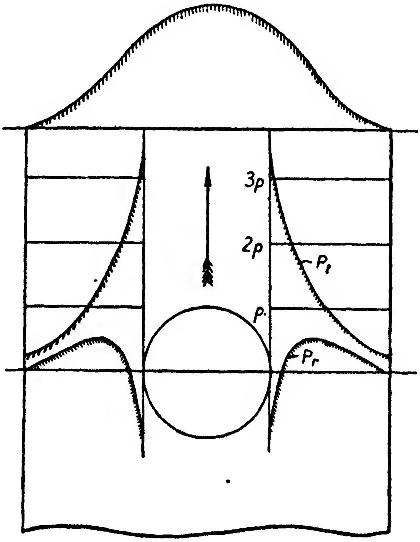

FIG. 461. SHOWING STRESSES AT THE PRINCIPAL CROSS-SECTION OF PIN-LOADED EYE-BAR

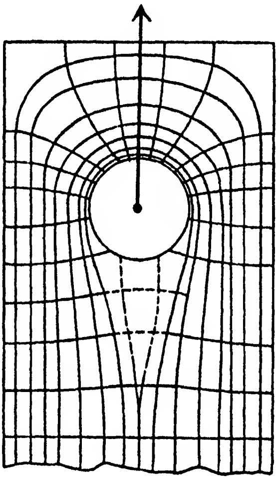

FIG. 462. STRESS DISTRIBUTION IN DRILLED PLATE, DUE TO A PIN BEARING AGAINST A CENTRAL HOLE IN A TENSION MEMBER

It will be observed that colour bands spring from near the point of the tool and form two distinct lobed systems of nearly circular form, and separated by a black band or brush.

Fig. 464 shows the corresponding stress distribution lines in nitrocellulose under the action of the cutting tool. The stress system in the area of the plate in front of the tool is roughly that of radial

---

* These, unfortunately, do not reproduce very clearly in the illustration.

compression, varying inversely as the distance from the point of the tool, and directly as the cosine of the angular displacement from the centre line. In the corresponding area to the left of this, the measurements indicate a radial tensile distribution of the same type.

The above explanation must, however, be regarded as being approximate only, for there are minor principal stresses distributed over the plate area around the tool point.

FIG. 463. APPLICATION OF PHOTO-ELASTIC METHOD TO THE STUDY OF THE ACTION OF CUTTING TOOLS, USING NITRO-CELLULOSE AS THE CUTTING MATERIAL

In connection with the stress distribution in the tool itself, the results of polariscope observations show that the stress system is probably of a simple type, as indicated by bands of colour springing from the point of the tool. These appear to show that the stress is of the radial type.

It is interesting to note that this result agrees with those of a mathematical investigation made by Mitchell.* The tool should be sharp and well supported at the back, and the cuts not too heavy, in order to realize these conditions.

Similar investigations have been carried out on turning and milling machines, the general results being similar to those outlined, briefly, for pure planing action.

---

* *Lond. Math. Soc. Proc.*, 34 (1902), Appendix (34).

Fig. 465 shows the results of a graphical analysis of the stresses occurring during the action of a milling cutter. The amounts of tensions in the material being cut are shown by the ordinates of the curves below the surface of the material, whilst compressions are indicated by the curves above the surface.

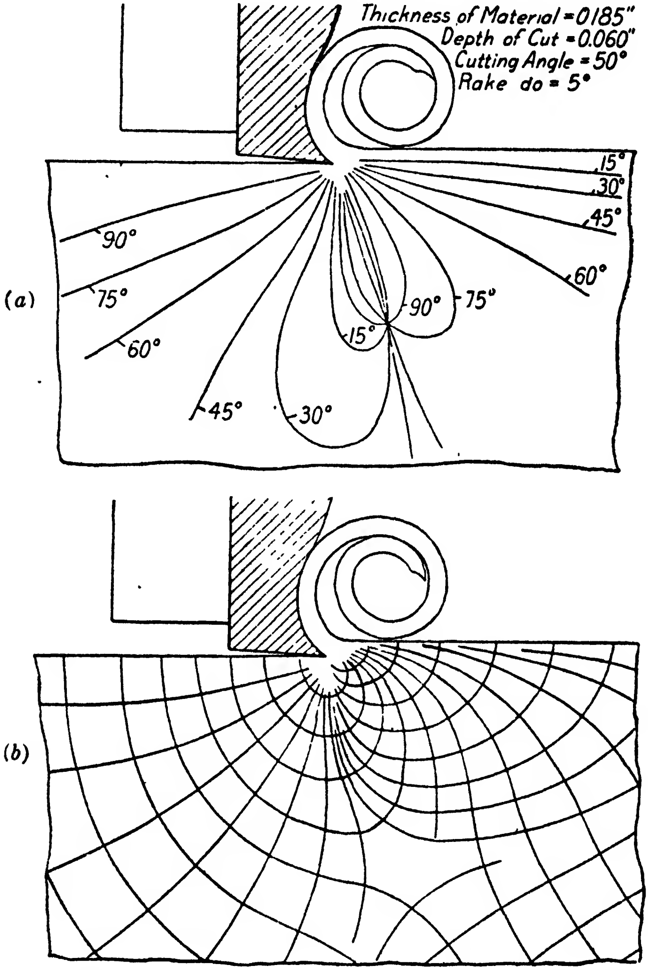

Fig. 464. Stress Distribution Curves deduced from Polariscope Method of testing Cutting Action of Machine Tools

(*Above*) Isoclinic bands. (*Below*) Lines of principal stress

It will be observed that as the cut increases, namely, for the leading tooth of the milling cutter, the compression in front of the tooth is a maximum. The tensile stresses behind the first two teeth are approximately the same. There is practically no compression in front of the lower tooth, due to the small amount of material it is removing. The greatest stresses in the material are, therefore, those near the point of the leading tooth of the milling cutter.

Stresses in Links or Chains

Another interesting example of stress analysis by the method in question is that of the link of a chain as shown in Figs. 466 and 467.

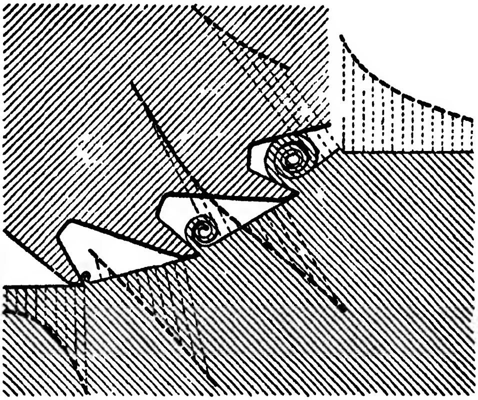

FIG. 465. ILLUSTRATING STRESSES PRODUCED DURING MILLING OPERATION

Fig. 466 shows the "coloured" bands or "isochromatic" lines whereby the stress at each point is measured. Each continuous outline shows the points of equal stress.

Fig. 467 shows the isoclinic (left), and isostatic lines of stress (right).

The isoclinic lines are those which are directly obtained by means of the optical apparatus, one by one, the isostatic lines being obtained from them.

The isostatic, or principal stress, lines are those along which the stresses are in equilibrium; these lines go from bottom to top in accordance with the maximum stresses affecting the link at every point.

The transverse lines (on the right) correspond to the minimum stresses. The two families of curves corresponding to the maximum and minimum stresses are orthogonal, i.e. they always cut each other at right angles.

General Application of Results

It has already been shown how the results of photo-elastic tests on transparent models can be applied to actual engineering cases,

Fig. 466. Polariscope Method applied to a Link in a Chain

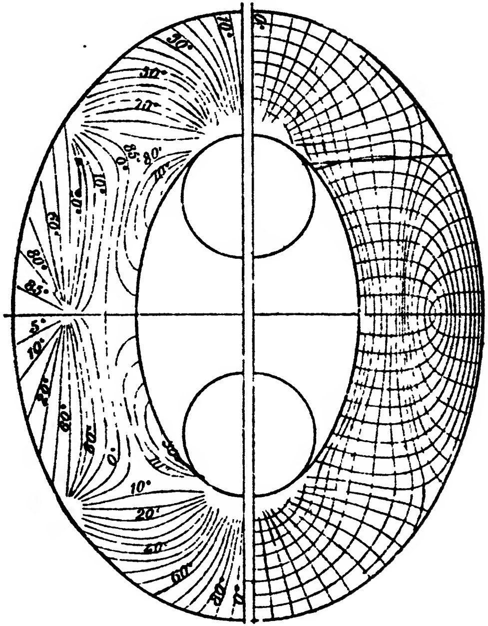

Fig. 467. Stress Distribution in Chain Link

provided the model and original are geometrically similar and the stresses are within the elastic limit.

Investigations into the stress distribution of loaded eye-bars and pins in holes in plates, by Coker and others, show that in an unfavourable case the results of photo-elastic investigation may be safely used to bodies of similar shape in metals, where an accuracy of ± 5 per cent is sufficient, as it probably is in most cases of engineering application with materials whose physical properties in bulk cannot be guaranteed more closely.

BIBLIOGRAPHY

Prof. E. G. Coker, "Photo-elastic Measurements of Stress Distribution," *Royal Soc. Arts*, Cantor Lecture, 14th, 21st, and 28th February, 1927.

Prof. E. G. Coker, "Photo-elastic Measurements of the Stress Distribution in Tension Member used in the Testing of Materials," *Minutes of Proc. Inst. Civil Eng.*, vol. ccviii, Part 11. 1918 19.

Prof. E. G. Coker and K. C. Chakko, "An Account of Some Experiments on the Action of Cutting Tools," *Proc. Inst. Mech. Eng.*, 1922.

Prof. E. G. Coker, "Report on the Action of Cutting Tools," *Proc. Inst. Mech. Eng.*, 1925.

Prof. E. G. Coker, "Photo-elasticity for Engineers," *General Electric Review Reprint*, 1921.

H. B. Maris, "Photo-elastic Investigation of the Tension Test Specimen, the Notched Bar, the Ship Propeller Strut, and the Roller Path Ring," *Journal Opt. Soc. America*, vol. xv, No. 4, October, 1927.

A. Mesnager, "Les Tensions Intérieures Rendues Visible," *La Technique Moderne*, 15th March, 1924.

J. Labadié, "La Nouvelle Méthode Photo-Élastique," *La Science et La Vie.*

Prof. E. G. Coker and G. P. Coleman, "Cleavage Tests of Timber," *Proceedings of the Royal Society of Architects*, Vol. 128, 1930.

L. W. Schuster, "The Strength and Design of Fusion Welds for Unfired Pressure Vessels," *Proceedings of the Institution of Mechanical Engineers*, Part 2, 1930.

Prof. E. G. Coker and Miss R. Levi, "Contact Pressures and Stress Distributions in Cams, Rollers and Wheels," *Proceedings of the Institution of Mechanical Engineers*, No. 3, 1930.

"Research Work of Messrs. Metropolitan-Vickers Electrical Company, Ltd.', *Engineering*, 7th December, 1928.

R. V. Baud, "Study of Stresses by Means of Polarized Light and Transparencies," *Proceedings of the Engineers' Society of Western Pennsylvania*, Vol. 44, No. 6, July, 1928.

Prof. E. G. Coker and G. P. Coleman, "Stress Distributions in Notched Beams and their Application," *Transactions of the Institution of Naval Architects*, 1930.

APPENDIX No. I

FATIGUE STRESS FORMULAE

THE published results of Wöhler's alternating stress tests have been embodied in the following formula, due to Gerber.

This, and the formulae of Unwin and Launhardt-Weyrauch, are given in their original form, but later a much simpler method of expressing Gerber's formula is presented.

The results expressed in the original formulae, it should be noted, refer to iron and steel, and not in general to non-ferrous metals and metallic alloys.

Calling k_{max} the breaking strength of the material for a repeated load giving stresses ranging from k_{max} and $\pm k_{min}$ for an indefinitely large number of alternations, then the stress range

$$\Delta = k_{max} \pm k_{min},$$

where $-k_{min}$ corresponds to stresses of the opposite kinds to k_{max} and k_{min} to the same type of stress.

The stress range Δ is then always positive in value. If K is the statical breaking strength of the material, then

$$k_{max} = \frac{\Delta}{2} + \sqrt{K^2 - n\Delta K}$$

expresses the results of Wöhler's tests, where n is a constant whose value depends upon the type of material.

For wrought iron and mild steel $n = 1{\cdot}5$.
For hard steel . . . $n = 2{\cdot}0$.

In the following table the formulae, deduced from the one above, are given for certain special cases of practical interest.

By substituting the values of n previously given for ductile materials, the reversed stress limit (k_{max}) works out at $K/3$—i.e. the working stress limits must not exceed from $-\frac{K}{3}$ to $+\frac{K}{3}$.

For varying stresses from zero to k_{max}, the value of k_{max} works out at 0·61 K, so that the working limits of stress for stresses varying frequently from zero to a maximum should not exceed 0·61 of the statical ultimate strength.

For hard and brittle steels, the corresponding reversed stress limits are from $-\frac{K}{4}$ to $+\frac{K}{4}$, and for varying stress from 0 to 0·472 K.

FORMULAE FOR VARIOUS KINDS OF REPEATED LOADING STRESSES. (Unwin)

Type of Stress Variation	Stress Range Δ	Formula for Maximum Stress causing Fracture for an Infinite Number of Load Repetitions
Steady stress k_{max} only	zero	$k_{max} = K$
Tension, from 0 to k_{max}	k_{max}	$k_{max} = 2(\sqrt{n^2+1} - n)K$
Tension, from 0 to $\frac{k_{max}}{2}$	$\frac{1}{2} k_{max}$	$k_{max} = \frac{4}{3}\left(\sqrt{\frac{n^2}{9} + 1} - \frac{n}{3}\right)K$
Tension, from $\frac{k_{max}}{2}$ to k_{max}	$\frac{1}{2} k_{max}$	$k_{max} =$ ditto
From $-\frac{k_{max}}{2}$ to $+\frac{k_{max}}{2}$	k_{max}	$k_{max} = 2(\sqrt{n^2+1} - n)K$
From $-k_{max}$ to $+k_{max}$	$2k_{max}$	$k_{max} = \frac{K}{2n}$

The Launhardt-Weyrauch Formula. This empirical formula expresses the limiting value of k_{max} for both varying and reversed stresses, and gives results which agree fairly well with the observed ones.

Thus, $$f_{max} = \tfrac{2}{3}K\left(1 + \tfrac{1}{2}\frac{f_{min}}{f_{max}}\right) \text{ for mild steel.}$$

This formula* gives a reversed stress limit of from $-\frac{K}{3}$ to $+\frac{K}{3}$, and a varying stress limit of from 0 to $\frac{K}{2}$.

The diagram shown in Fig. 468 expresses the results of the above formula graphically, and enables the limiting value of the maximum stress f_{max} to be read off for any given type of stress variation. For example, for a stress varying from a negative value denoted to scale by *oc*, the range of stress is represented by *cot*, and the safe maximum stress by *ot*.

For a varying stress commencing from any initial value o_1t_1, the permissible range is given by t_1t_2, and the maximum allowable stress by o_1t_2.

These stresses are the limiting values which will withstand an almost indefinite number of repetitions at a rate not exceeding a few hundred per minute. The maximum stress curve *ABD* is often, as in the above formula, replaced by the straight line *AD*. Fig. 468 also shows the "range of stress" curve for different values of the maximum stress (abscissae).

---

* In deducing these values, the sign of f_{min} must be taken as being negative.

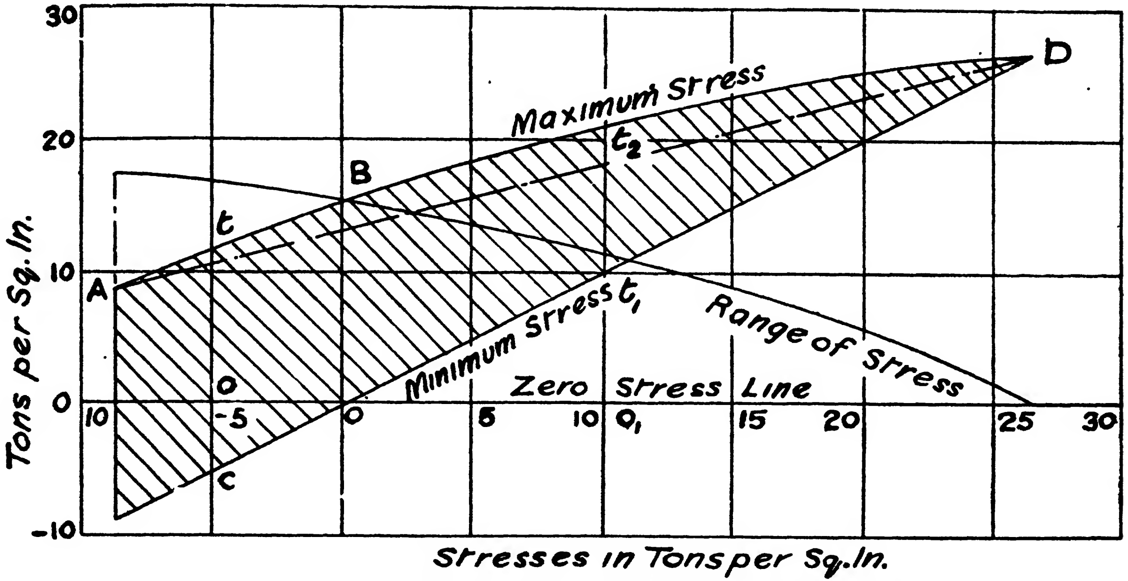

FIG. 468. ILLUSTRATING GRAPHICALLY THE LAUNHARDT-WEYRAUCH FORMULA

A Simpler Formula

Gerber's analysis of Wöhler's and Bauschinger's experimental results may be expressed in a rather simpler manner than that previously given. This original equation may be written as follows—

$$R = Rt\left\{1 - \left(\frac{M}{f}\right)^2\right\}$$

where R = limiting range of stress,

M = mean stress,

Rt = limiting range of stress for reversed stresses ($M = 0$)

f = statical ultimate strength of the material.

All stresses are, of course, expressed in the same units, e.g. tons per square inch.

This formula shows that if the safe ranges of stress are plotted as ordinates, and the minimum stresses of the cycle as abscissae, *the experimental results lie on a parabolic* curve; this is sometimes referred to as *Gerber's parabola.* Certain metals, including nickel-chromium steel, naval brass, and cast iron do not appear to conform to Gerber's formula, but follow a linear relation as follows—

$$R = Rr\left(1 - \frac{M}{f}\right).$$

This corresponds to a straight line graph.

Other metals and alloys, according to the somewhat limited data available at the time of writing, do not appear to conform to either of the two formulae given.

Modified Goodman Fatigue Formula

A modification of the Goodman formula for fatigue stresses, due to Professor H. W. Swift,* is illustrated in graphical form in Fig. 469. It is put forward as a basis of calculation for both direct and shear stresses, since it has been found that the general relationship between limiting stress range and mean stress is similar for direct and shear stress cycles.

The diagram shows that for a static tensile strength of K, the fatigue limit is $\frac{1}{3}K$ and the mean stress p_1 and stress range p_2 are given by

$$K = p_1 + \tfrac{3}{2} p_2$$

for all values of p_1 and p_2 between zero and K.

---

* "Mechanical Properties in Relation to Design," H. W. Swift, *Journ. Jun. Inst. Engrs.*, August, 1940.

For ductile materials *the range in shear* is found to be rather more than half the range in direct stress so that the Goodman diagram for tensile fatigue can be used for shear values if the stress values are halved. For less ductile materials the range in shear bears a greater proportion to the direct stress range and for a brittle material like cast iron, since failure even under pure shear actually occurs by tension, the Goodman diagram can be applied with the same scale, whether in shear or direct stress.

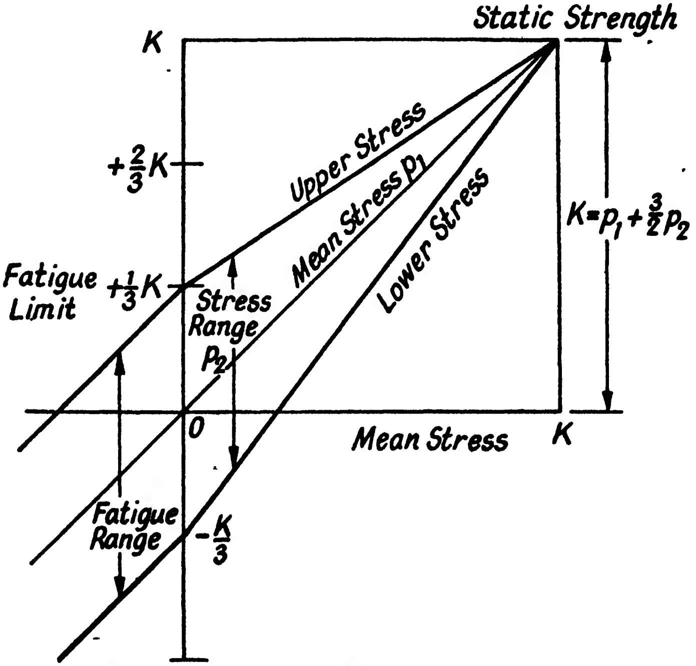

FIG. 469. ILLUSTRATING THE MODIFIED GOODMAN FATIGUE FORMULA

Combined Bending and Torsion Stresses

Failure by fatigue under combined bending and torsion, where the torsional and bending stresses are always proportional to and in phase with one another, has been shown by H. J. Gough and H. J. Pollard to be expressible for ductile materials by the following relation between combinations of normal stress n and shear stress s on the transverse planes which will just cause fatigue failure, namely—

$$\left(\frac{n}{n_1}\right)^2 + \left(\frac{s}{s_1}\right)^2 = 1$$

where n_1, s_1 are the fatigue limits in pure tension and pure shear.

If the bending conditions are such that the ratio r of the shear stress due to torsion to the normal stress due to bending is known, i.e. $\frac{s}{n} = r$, and if the ratio of the fatigue limits under shear and normal stress is known, i.e. $\frac{s_1}{n_1} = m$, then fatigue failure will occur if

$$\left(\frac{n}{n_1}\right)^2\left(1 + \frac{r^2}{m^2}\right) = 1$$

Thus, the problem of combined stress reversal can be regarded as a case of simple stress reversal of normal bending stress if an equivalent fatigue limit of the following value is used instead of n_1—

$$\text{Equivalent fatigue limit} = \frac{n_1}{\sqrt{1 + \frac{r^2}{m^2}}}$$

Alternatively, an equivalent fatigue bending moment M_f may be used for fatigue purposes, such that

$$M_f = M\sqrt{1 + \frac{r^2}{m^2}}$$

where M is the actual bending moment.

The shaft may then be designed as a beam subject to reversals of bending stress alone.

The value of m for ductile steels is about 0·55 to 0·70, the lower limit applying to mild steels.

APPENDIX No. II

APPROXIMATE COMPARISON OF HARDNESS SCALES* (B.S.I.)

DIAMOND PYRAMID SCALE (B.S. 427—1931)	BRINELL (STEEL BALL) SCALE (B.S. 240—1937)		DIRECT READING HARDNESS TEST (ROCKWELL PRINCIPLE) (B.S. 891—1940)					
			C. SCALE 150 kg. Diamond Cone		A. SCALE 60 kg. Diamond Cone		B. SCALE 100 kg. $\frac{1}{16}$ in. Steel Ball	
	Variations†	Adopted Value	Variations†	Adopted Value	Variations†	Adopted Value	Variations†	Adopted Value
(1)	(2)	(3)	(4)	(5)	(6)	(7)	(8)	(9)
20	15–25	20						
40		40						
60		55						
70		65						
80		75						
90		85						
100	80–100	95				43	47–61	54
120		115				47		65
140		135				50		77
160		155				53		83
180		175				56		89
200	175–205	195			58–60	59	93–95	94
220		215				60		97
240		235	18–23	20		61		100
260		255		24		63		
280		275		27		64		
300	280–300	295	27–33	30	65–68	66		
320		310		32		67		
340		325		34		68		
360		345		36		69		
380		360		39		70		

* B.S.I. Specification No. 860—1939.

† I.e. range to be expected among individual cases. The variations given apply to the line on which they occur, and intermediate values may be estimated by considering the next set of variations in the same column.

Diamond Pyramid Scale (B.S. 427—1931)	Brinell (Steel Ball) Scale (B.S. 240—1937)		Direct Reading Hardness Test (Rockwell Principle) (B.S. 891—1940)			
			C. Scale 150 kg. Diamond Cone		A. Scale 60 kg. Diamond Cone	
(1)	Variations* (2)	Adopted Value (3)	Variations* (4)	Adopted Value (5)	Variations* (6)	Adopted Value (7)
400	370–395	380	38–42	40	70–72	71
420		395		42		72
440		415		44		73
460		430		45		73
480		445		47		74
500	445–480	460	46–50	48	73–76	75
520		475		49		75
540		490		50		76
560		505		51		76
580		520		52		77
600	515–550	535	52–56	54	75–79	77
620		545		55		78
640		560		56		78
660		570		57		79
680		585		57		79
700	580–620	595	57–61	58	76–80	80
725		605		59		81
750		630		61		81
800			60–64	62	77–83	82
850				63		82
900			63–67	65	78–84	83
950				66		83
1000			65–69	68		84
1100				69		85
1200				70		87
1250					87–90	88
1400				71	90–93	91

* I.e. range to be expected among individual cases. The variations given apply to the line on which they occur, and intermediate values may be estimated by considering the next set of variations in the same column.

APPENDIX No. III

Physical Constants of Metals

Metal	Symbol	Atomic Weight (O = 16)	Atomic Volume	Specific Gravity	Specific Heat	Melting Point, ° C.	Coefficient of Linear Expansion	Therm. Cond. C.G.S. Units	Elect. Cond. C.G.S. Units
Aluminium	Al	27·1	10·6	2·56	0·218	657	0·0000231	0·502	390,000
Antimony	Sb	120·2	17·9	6·71	0·051	632	0·0000105	0·042	31,471
Arsenic	As	74·96	13·2	5·67	0·081	450 under pressure	0·0000055	—	32,425
Barium	Ba	137·37	36·3	3·78	0·047	850	—	—	—
Bismuth	Bi	208·0	21·2	9·80	0·031	266	0·0000162	0·019	9,091
Cadmium	Cd	112·4	13·2	8·60	0·056	322	0·0000306	0·219	99,800
Cæsium	Cs	132·81	71·0	1·87	0·048	26	0·0001316	—	25,400
Calcium	Ca	40·09	25·5	1·57	0·170	780	—	—	150,818
Cerium	Ce	140·25	21·0	6·68	0·045	623	—	—	—
Chromium	Cr	52·0	7·6	6·80	0·120	1482	—	—	—
Cobalt	Co	58·97	6·9	8·50	0·103	1464	0·0000123	—	106,140
Columbium	Cb	93·5	13·0	7·2	0·071	1950	—	—	—
Copper	Cu	63·57	7·1	8·93	0·098	1084	0·000167	0·924	640,615
Gallium	Ga	69·9	11·8	5·90	0·079	30	—	—	—
Glucinum	Gl	9·1	4·7	1·93	0·621	Below 960	—	—	—
Gold	Au	197·2	10·2	19·32	0·031	1064	0·0000144	0·700	455,166
Indium	In	114·8	15·5	7·42	0·057	155	0·0000417	—	112,400
Iridium	Ir	193·1	8·6	22·42	0·033	1950	0·0000070	—	—
Iron	Fe	55·85	7·2	7·86	0·110	1505	0·0000121	0·147	110,314
Lanthanum	La	139·0	22·7	6·10	0·045	810	—	—	—
Lead	Pb	207·1	18·2	11·37	0·031	327	0·0000292	0·084	49,067
Lithium	Li	7·0	13·0	0·54	0·941	186	—	—	119,428

Magnesium	Mg	24·32	13·9	1·74	0·250	633	0·0000269	0·343	229,616
Manganese	Mn	54·93	7·3	7·50	0·120	1207	—	—	—
Mercury	Hg	200·0	14·7	13·59	0·032	— 39	0·0000610	0·015	10,630
Molybdenum	Mo	96·0	11·2	8·60	0·072	2500	—	—	—
Nickel	Ni	58·68	6·7	8·80	0·108	1427	0·0000127	0 141	144,196
Osmium	Os	190·9	8·5	22·48	0·031	2500	0·0000065	—	105,300
Palladium	Pd	106·7	9·3	11·50	0·059	1535	0·0000117	0·168	97,857
Platinum	Pt	195·0	9·1	21·50	0·032	1745	0·0000089	0·166	91,600
Potassium	K	39·1	45·5	0·86	0·170	62	0·0000841	—	141,990
Rhodium	Rh	102·9	8·5	12·10	0 058	1660	0·0000085	—	—
Rubidium	Rb	85·45	55·8	1·53	0·077	38	—	—	—
Ruthenium	Ru	101·7	8·3	12·26	0·061	1800	0·0000096	—	—
Scandium	Sc	44·1	17·6	2·5	0·153	1200	—	—	—
Silver	Ag	107·88	10·2	10·53	0·056	962	0·0000192	0·993	681,198
Sodium	Na	23·0	23·8	0·97	0·290	95	0·0000710	0·365	253,973
Strontium	Sr	87·62	34·5	2·54	—	800	—	—	45,708
Tantalum	Ta	181·0	14·1	12·8	0·033	2910	0·0000079	—	60,600
Tellurium	Te	127·5	20·4	6·25	0·049	440	0·0000167	—	46,600
Thallium	Tl	204·0	17·2	11·85	0·033	303	0·0000302	—	56,712
Thorium	Th	232·42	20·9	11·10	0·028	1450	—	—	—
Tin	Sn	119·0	16·3	7·29	0·055	232	0·0000232	0·155	76,640
Titanium	Ti	48·1	13·5	3·54	0·13	2000 ?	—	—	—
Tungsten	W	184·0	9·6	19·10	0·034	3100	—	—	11,600
Uranium	U	238·5	12·8	18·7	0·028	—	—	—	—
Vanadium	V	51·2	9·3	5·50	0·125	1680	—	—	—
Yttrium	Yt	89·0	23·4	3·80	—	1000 ?	—	—	—
Zinc	Zn	65·37	9·1	7·15	0·094	419	0·0000291	0·269	171,381
Zirconium	Zr	90·6	21·8	4·15	0·066	1500	—	—	—

APPENDIX No. IV

DUCTILITY AND MALLEABILITY OF COMMON METALS

No.	Order of Ductility of Common Metals*	Order of Malleability of Common Metals†
1	Gold	Gold
2	Silver	Silver
3	Platinum	Copper
4	Iron	Tin
5	Nickel	Platinum
6	Copper	Lead
7	Zinc	Zinc
8	Tin	Iron
9	Lead	Nickel

* Ductility is the property which enables metals to be drawn out into wire.

† Malleability is the property of permanently extending, under pressure, in all directions, without rupture.

APPENDIX No. V

British Standards for Metals and Alloys (Abridged)*

I. Ferrous Materials, etc.

32—1935. Steel Bars for the Production of Machined Parts for General Engineering Purposes.

51—1939. Wrought Iron for General Engineering Purposes (Grades A, B, and C). [*Add.* November, 1939.]

224—1938. Steel for Die Blocks for Drop Forgings.

309—1927. White Heart Malleable Iron Castings. [*Add.* May, 1931.]

310—1927. Black Heart Malleable Iron Castings. [*Add.* May, 1931.]

321—1938. General Grey Iron Castings, Grades A and C.

592—1935. Steel Castings for General Engineering Purposes. [*Add.* February, 1941.]

681—1936. Carbon Chromium Steel.

682—1936. 3 per cent Nickel-chromium Case-hardening Steel.

725—1937. Hot Rolled Mild Steel Strip (or Hoop) not exceeding 10 inches wide for General Engineering Purposes.

762—1938. Wrought Iron Bars, "Special" Grade.

786—1938. High Duty Iron Castings, Grades 1, 2, and 3.

821—1938. Iron Castings for Gears and Gear Blanks (Ordinary, Medium and High Grade).

847—1939. Cold Rolled Mild Steel Strip for General Engineering Purposes.

858—1939. "Best Yorkshire" Wrought Iron. [*Add.* October, 1940.]

1—1920. Rolled Steel Sections for Structural Purposes. [*Under Revision*, 1940.]

13—1910. Steel for Shipbuilding, Structural. [*Under Revision*, 1940.]

18—1938. Tensile Testing of Metals.

182—184—1938. Galvanized Iron and Steel Wire.

399—400—1930/1. High and Low Carbon Steel Cylinders for Storage of Permanent Gases.

449—1937. Use of Structural Steel in Building. [*Add.* November, 1939.]

485—1934. Tests on Thin Sheet Metal and Strip [not exceeding 0·128 in.]

494—1933. Cold Drawn Weldless Steel Tubes for Steel Boilers and Superheaters.

499—1939. Welding and Cutting, Nomenclature, Definitions and Symbols for.

512—1934. Hot Finished Weldless Steel Boiler and Superheater Tubes [for Temperatures exceeding 850° Fah.].

528—1934. Lapwelded Steel Boiler Tubes for External Pressure.

548—1934. High Tensile Structural Steel for Bridges, etc. [*Add.* May, 1936, and February, 1938.]

560—1934. Engineering Symbols and Abbreviations. British Standard.

601—1935. Steel Sheets for Transformers for Power and Lighting.

621—1935. Wire Ropes of Special Construction for Engineering Purposes.

640—1935. Bare Rod or Wire Electrodes for Metal Arc Welding, Wrought Iron and Mild Steel.

641—1935. Small Rivets (Ferrous and Non-ferrous) for General Purposes.

693—1936. Oxy-acetylene Welding as Applied to Steel Structures.

---

* British Standards Institution, 28 Victoria Street, London, S.W.1.

933—1941. Magnetic Materials for Use under Combined D.C. and A.C. Magnetization.

968—1941. High Tensile (Fusion Welding Quality) Structural Steel for Bridges, etc., and General Building Construction.

II. Automobile Materials and Parts

5001—1924; 5002—1924; 5003—1927. *Cancelled.*

5004—1927. Cast Iron Piston Ring Pots (Sand Cast and Chill Cast) for Automobiles.

5005—1924. Wrought Steel for Automobiles. [*Add.* June, 1929.]

5006—1924. Cold Worked Steel Bars and Strip for Automobiles. [*Add.* June, 1928.]

5007—1924. Sheet Steel for Automobiles.

5008—1924. Valve Steels and Valve Forgings for Automobiles.

5009—1924. Steel Tubes for Automobiles.

5010—1925. Steels for Laminated Springs for Automobiles.

5015—1927. Splines (Bottom Fitting) for Automobiles, Dimensions for. [*Under Revision.*]

5016—1923; 5017—1923; 5018—1923; 5019—1923; 5020—1924; 5021—1928. *Cancelled.*

5027—1924. Magnetos for Internal Combustion Engines, Dimensions for.

5028—1924. Steel Castings (Nos. 1 and 2 Grade) for Automobiles.

III. Non-ferrous Materials, etc.

359—1929. 98 per cent Aluminium (Notched Bars, Ingots, Rolling Slabs and Billets).

360—1929. 99 per cent Aluminium (Notched Bars and Ingots).

361—1929. 7 per cent Copper-aluminium Alloy Castings for General Engineering Purposes.

362—1929. 12 per cent Copper-aluminium Alloy Castings for General Engineering Purposes.

363—1929. Zinc-copper-aluminium Alloy Castings (Crank Cases and General Use).

385—1930. Pure Aluminium Tubes for General Engineering Purposes.

386—1930. Pure Aluminium Bars and Sections for General Engineering Purposes.

388—1938. Aluminium (Powder and Paste) for Paints.

395—1930. Wrought Light Aluminium Alloy (Duralumin) Sheets and Strips for General Engineering Purposes.

396—1930. Wrought Light Aluminium Alloy (Duralumin) Tubes for General Engineering Purposes.

414—1931. Wrought Light Aluminium Alloy Sheets and Strip (Heat-treated) for General Engineering Purposes. [Covering Y-alloy, also.]

477—1933. Wrought Light Aluminium Alloy Bars for General Engineering Purposes. [Covering Duralumin.]

478—1933. Wrought Y-alloy Bars for General Engineering Purposes.

532—1934. Light Aluminium Alloy Forgings for General Engineering Purposes. [Covering Duralumin.]

533—1934. Y-alloy Forgings for General Engineering Purposes.

702—1936. Silicon-aluminium Alloy Castings for General Engineering Purposes.

703—1936. Y-alloy Castings (as Cast) for General Engineering Purposes.

704—1926. Y-alloy Castings (Heat-treated) for General Engineering Purposes.

918—1940. Aluminium Bars Containing Small Proportions of Copper and Zinc for General Engineering Purposes.

24—Part 5—1925. Railway Rolling Stock. Copper Plates, Rods, Tubes and Pipes and Brass Tubes.

99—1922. Copper Alloy Pipe Fittings. Screwed for Low and Medium Pressure B.S. Copper Tubes. [*Add.* October, 1927.]

61—1913. Copper Tubes and their Screwed Threads. (Domestic and Similar Work.)

125—1930. Hard Drawn Copper Solid and Stranded Circular Conductors for Overhead Power Transmission Purposes. [*Add.* November, 1933.]

128—1929. Bare Annealed Copper Wire for Electrical Machinery and Apparatus. Dimensions and Resistances. [*Add.* April, 1930, and November, 1935.]

174—181—1938. Overhead Line Material [Non-ferrous] for Telegraph and Telephone Purposes. [Includes Copper, Bronze and Copper-cadmium Wires.]

198—1925. Electrolytic Copper Wire Bars, Cakes, Slabs and Billets.

199—1924. Electrolytic Copper Ingots and Copper Bars.

200—1924. Tough Copper Cakes and Billets for Rolling.

201—1924. Fine Copper Cakes for Rolling.

202—1924. Electrolytic Cathode Copper.

203—1924. "Best Select" Copper.

207—1924. Special Brass Ingots for Castings.

208—1924. Special Brass Castings.

218—1925. Brass Bars and Sections, suitable for Forgings and Drop Forgings.

249—1926. Brass Bars (High Speed Screwing and Turning). [*Add.* February, 1931, and November, 1932.]

250—1926. Brass Bars, High Tensile, and Sections (Grades A and B). [*Add.* November, 1932.]

251—1927. Naval Brass (Admiralty Mixture) Bars and Sections. [*Add.* July, 1931, and November, 1932.]

252—1927. Naval Brass (Special Mixture) Bars and Sections. [*Add.* November, 1932.—*Under Revision.*]

265—1936. Cold Rolled Brass Sheets, Strip and Foil (Copper, 61·5 per cent to 64·0 per cent).

266—1936. Cold Rolled Brass Sheets, Strip and Foil (Copper, 64·0 per cent to 67·0 per cent).

267—1936. Cold Rolled Brass Sheets, Strip and Foil (Copper, 68·0 per cent to 72·0 per cent).

352—1929. Phosphor Bronze Turbine Blading.

356—1929. Brass Armouring Wire for Electrical Cables.

369—1929. Phosphor Bronze Bars or Rods for General Purposes (Grades A and B).

378—1930. Brass Tubes and Screwed Glands for Condensers for Land Purposes.

382—1930. 2/10/88 Bronze (Gunmetal) Ingots for General Engineering Purposes.

382—1930. 2/10/88 Bronze (Gunmetal) Castings for General Engineering Purposes.

384—1930. Hard Drawn Phosphor Bronze Wire, Primarily for Armature Binding.

407—1939. Phosphor Bronze Sheets, Strip and Foil (up to 10 S.W.G.).

409—1931. Naval Brass Plates, Sheets and Strips. (Excluding N.B. Condenser Plates).
421—1931. Phosphor Bronze Castings for Gear Blanks.
444—1932. Plain Dead Soft Copper Strip, Bars and Rods, for the Windings of Electrical Machines.
659—1936. Light Gauge Copper Tubes.
672—1936. Hard Drawn Copper-cadmium Solid and Stranded Circular Conductors for Overhead Power Transmission.
699—1936. Copper Cylinders for Domestic Purposes.
711—713—1936. Cold Rolled Brass Sheets, Strip and Foil. [Copper, 80, 85 and 90 per cent.] (Up to and including 3 S.W.G. thickness.)
837—1939. Steel Cored Copper Conductors for Overhead Power Transmission Purposes.
264—1926. Hot Rolled Yellow Metal Plates, Sheet and Strip. (Excluding Condenser Plates and Ships' Sheathing.)
885—886—1940. Seamless Brass Tubes for General Purposes (Hard Drawn, 25 to 35 Tons per sq. in. Tensile and Annealed.)
897—898—1940. Leaded Gunmetal Castings and Ingots. [*Add.* October, 1940.] [85/5/5/5.]
900—901.—1940. Leaded Gunmetal Castings and Ingots. [*Add.* October, 1940.] [87/9/3/1.]
899—1940. Cold Rolled Copper Sheets and Strip (Half-hard and Annealed for General Purposes (up to 3 S.W.G.)).
920—1940. Naval Brass Die Castings.
932—1940. Brass Gravity Die Castings.
944—1941. Cast Brass Bars (suitable for Forging) and Forgings.
960—965—1941. Leaded Bronze Ingots and Castings (from 76/9/0/15 to 85/10/0/5).

IV. MISCELLANEOUS

206—1924. Silver Solder.
219—1932. Soft Solders (Grades A, B, C, D, E, F, G, H, J, and K).
220—1926. Fine Zinc (or Spelter) (Grades A and B).
221—1926. Special Zinc (or Spelter).
222—1926. Foundry Zinc (or Spelter).
263—1931. Brazing Solders (Grades AA, A and B).
441—1932. Cored Solder, Rosin Filled.
374—1930. Nickel-copper (Cupro-nickel) Sheets and Strip.
375—1930. Refined Nickel (Grade A).
790—1938. Nickel Silver Sheets and Strip of 10 to 30 per cent Nickel Content (up to and including 3 S.W.G.).
801—1938. Lead and Lead Alloys for Cable Sheathing.
871—1939. Abrasive Papers and Cloths for General Purposes.
872—1939. Abrasive Papers and Cloths (Technical Products).
771—1938. Synthetic Resin (Phenolic) Moulding Materials and Mouldings.
668—1936. Laminated Synthetic Resin Bonded Sheet (Fabric Base) for Use as Gear Material.
474—1932. Synthetic Resins (Phenol-aldehyde Type) for the Manufacture of Boards, Tubes and Cylinders.
488—1923. Moulded Insulating Materials suitable for Accessories for General Electric Installations.
547—1934. Synthetic Resin Bonded-paper Sheets (Grade 1) for Electrical Purposes.
316—1929. Synthetic Resin Varnish Paper Boards and Tubes for General Electrical Purposes.

972—1941. Synthetic Resin Bonded Fabric Sheet (New Standard). [September, 1941.]
626—1935. Micanite for Commutator Separators.
231—1936. Pressboard for Electrical Purposes. [Excluding "Built-up" Pressboard.]
234—1933. Ebonite for Electrical Purposes.
857—1939. Safety Glass for Land Transport.
934—1940. Vulcanized Fibre (Natural Colour) Rods and Tubes for Electrical Purposes.

INDEX