ELECTRIC POWER SYSTEM CONTROL

A SERIES OF MONOGRAPHS ON ELECTRICAL ENGINEERING

Under the Editorship of
H. P. YOUNG, M.I.E.E., M.A.I.E.E.
Head of the Electrical Power and Machinery Section,
The Polytechnic, London

◆

VOLUME I
THEORY OF ALTERNATING CURRENT WAVE-FORMS
By PHILIP KEMP, M.Sc.Tech., M.I.E.E., A.I.Mech.E.

VOLUME II
CATHODE RAY OSCILLOGRAPHY
By Professor J. T. MACGREGOR-MORRIS, D.Sc.(Eng.), M.I.E.E., and J. A. HENLEY, M.Sc. (Eng.).

VOLUME III
DIELECTRIC PHENOMENA IN HIGH VOLTAGE CABLES
By D. M. ROBINSON, Ph.D., M.S., B.Sc., M.I.E.E., Assoc. A.I.E.E.
With a Foreword by P. V. HUNTER, C.B.E., M.I.E.E.

VOLUME IV
DIRECT AND ALTERNATING CURRENT POTENTIOMETER MEASUREMENTS
By D. C. GALL, M.I.E.E., F.Inst.P.
With a Foreword by Professor S. PARKER SMITH, D.Sc., M.I.E.E., Assoc.M.Inst.C.E.

VOLUME V
THE COMMISSIONING OF ELECTRICAL PLANT AND ASSOCIATED PROBLEMS
By R. C. H. RICHARDSON, B.E., A.M.I.E.E.

VOLUME VI
ELECTRICITY METERS AND METER TESTING
By G. W. STUBBINGS, B.Sc., F.Inst.P., A.M.I.E.E.

VOLUME VII
THEORY AND DESIGN OF VALVE-OSCILLATORS
By H. A. THOMAS, D.Sc., M.I.E.E.
With a Foreword by SIR E. V. APPLETON, M.A., D.Sc., LL.D., F.R.S.

VOLUME VIII
THE FUNDAMENTAL THEORY OF ARC CONVERTORS
By H. RISSIK, Hons. B.Sc.(Eng.), A.M.I.E.E., M.A.M.E.E.
With a Foreword by Professor C. L. FORTESCUE, O.B.E., M.A., M.Inst.C.E., M.I.E.E.

VOLUME IX
MATHEMATICS APPLIED TO ELECTRICAL ENGINEERING
By A. G. WARREN, M.Sc., M.I.E.E., F.Inst.P.
With a Foreword by ALEXANDER RUSSELL, M.A., D.Sc., LL.D., F.R.S., M.I.E.E.

VOLUME X
RADIO-FREQUENCY MEASUREMENTS BY BRIDGE AND RESONANCE METHODS
By L. HARTSHORN, D.Sc., A.R.C.S., D.I.C.

VOLUME XI
ELECTRIC POWER SYSTEM CONTROL
By H. P. YOUNG, M.I.E.E., M.A.I.E.E.

VOLUME XII
ELECTRIC DISCHARGE LAMPS
By H. COTTON, D.Sc., M.I.E.E.
(*In the Press*)

Other volumes are in course of preparation, and detailed particulars will be sent free from time to time to anyone sending a request.

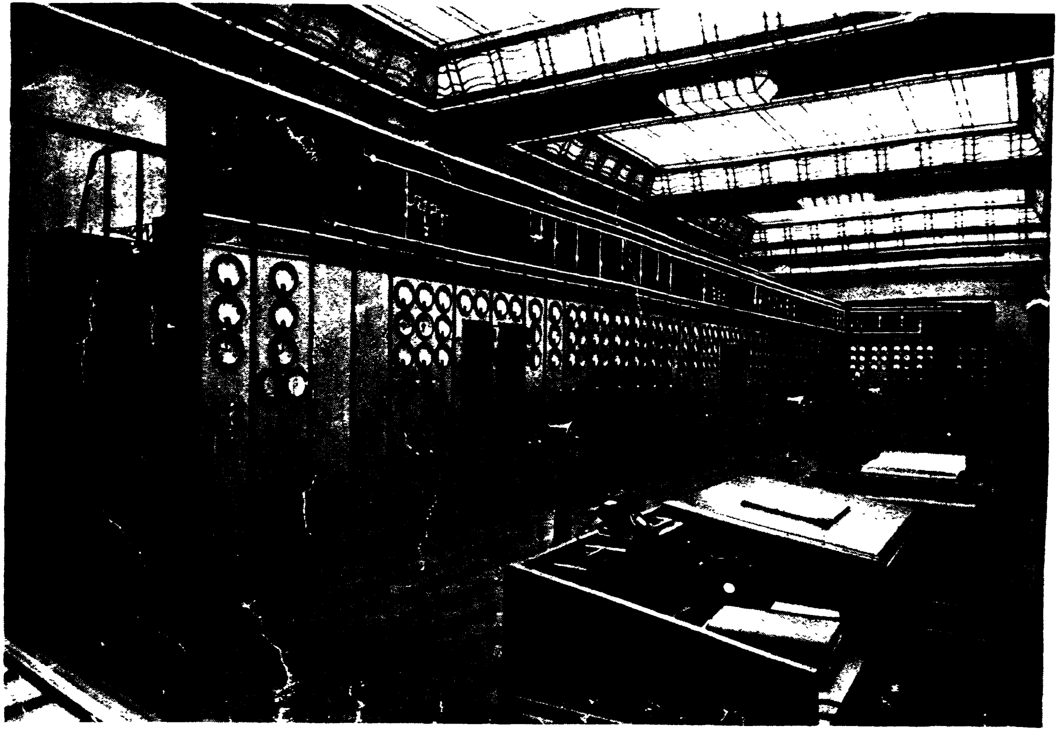

Part of the Control Room of a British Power Station.

Frontispiece.]

A SERIES OF

MONOGRAPHS ON ELECTRICAL ENGINEERING

Under the Editorship of
H. P. YOUNG, M.I.E.E., M.A.I.E.E.

VOLUME XI

ELECTRIC POWER SYSTEM CONTROL

BY

H. P. YOUNG
M.I.E.E., M.A.I.E.E.
Head of the Electrical Power and Machinery Section,
The Polytechnic, London

SECOND EDITION
REVISED AND ENLARGED

LONDON
CHAPMAN & HALL LTD.
37 ESSEX STREET W.C.2
1946

First Published 1942
Second edition (revised and enlarged) 1946

REPRINTED FROM STANDING TYPE.
THE PAPER AND BINDING OF THIS BOOK
CONFORM TO THE AUTHORIZED ECONOMY
STANDARDS

CATALOGUE No. 239/4

Printed in Great Britain by Butler & Tanner Ltd., Frome and London
Bound by G. & J. Kitcat Ltd., London. Flexiback Binding

EDITORIAL PREFACE

THE advances made within the realm of electrical engineering during the twentieth century have been phenomenal.

In the field of electric power supply the National Electricity Scheme has been conceived, designed and put into commission, thus increasing the reliability and availability of the service. Meanwhile the allied sciences of electrical communications and high frequency technique have moved forward with gigantic steps : indeed, it is hardly too much to say that, due to the advent of the electronic tube and its application in both the power and communications branches, certain aspects of electrical engineering practice have been completely revolutionized.

In view of these epoch-making advances, it is not surprising that the electrical engineer whose college days are some years behind him finds it necessary to do a considerable amount of reading in order to keep abreast of modern developments, while the student who is reading for a University degree is nowadays expected to possess at least an outline of the field of electrical physics in addition to a comprehensive knowledge of electrical technology.

While, however, the literature dealing with these advances is both comprehensive and voluminous, it is also scattered and thus available only by extensive literary research. The aim of each monograph published in this series is to give a modern orientation of a particular subject within the confines of a small book, thus obviating the necessity for searching through the transactions of innumerable learned societies. At the same time, for those wishing further to extend their knowledge, each monograph contains references to the more important publications relating thereto.

The satisfactory accomplishment of this object necessarily implies that the author must fulfil the dual function of collator and interpreter. For this reason, one of the editor's most important tasks has been to induce acknowledged authorities to write for this series. In this respect, he has been fortunate beyond his expectation, and each monograph has been written by an author who is eminent in his chosen field and thus writes with the authority which is the result of intimate knowledge.

It is hoped that the Monographs will succeed in filling a gap which has hitherto existed in scientific literature.

H. P. YOUNG.

PREFACE TO THE SECOND EDITION

THE need for a new edition has given me an opportunity for adding some new material in certain chapters. The main addition is, however, to the section on switchgear. Since the publication of the first edition, the status of the air blast breaker has advanced considerably in this country. Indeed, it seems probable that, in the larger sizes, the air blast breaker will oust the oil circuit breaker from the position which it has held for so long. In consequence, this subject has now been accorded a separate chapter in which the leading types have been described in an endeavour to give the reader a critical résumé of the present state of the art.

In order to ensure that this new chapter should be thoroughly practical, I took the obvious precaution of asking an engineer with wide experience in design and development to approve it. This task was very kindly undertaken by Mr. T. W. Wilcox, A.M.I.E.E., and much improvement was the inevitable result. Mr. A. G. Warren, M.Sc., has read through the remaining parts of the revision and has also suggested improvements. My grateful thanks are gladly accorded to both.

I am again indebted to the Institution of Electrical Engineers for permission to reproduce several diagrams from the *Journal*, to the American Institute of Electrical Engineers for permission to reproduce Figs. 90 and 143, and to manufacturers who have provided further photographs and diagrams. All these are acknowledged in the text.

H. P. Y.

PREFACE TO THE FIRST EDITION

For many years, electric power systems have been controlled manually, and this has resulted in the control staff being distributed over a wide area, each member thereof performing his prescribed and local functions in power- and substations, sometimes by his own initiative but generally in response to commands given by telephone from a central authority.

When the National Grid System was commissioned and very large power stations were thereby interconnected, it soon became evident that a new technique of system control would be required, in which the authority of one engineer located at a central control point must be increased to the verge of autocracy and, moreover, the speed at which orders were transmitted (and obeyed) must be increased. Also the reliability of the control system must be a maximum. These signposts all pointed towards the necessity for making the control as automatic as possible.

I make no apology for discussing first the parallel operation of generators and the characteristics of exciters, since, in my opinion, these matters are fundamental to a clear understanding of some of the problems relating to system control.

The subject of automatic regulation of synchronous machines, both for voltage and power factor control, is dealt with in some detail because of its great and increasing importance in system operation and because of its beneficent influence in increasing the system stability limit, i.e., in increasing the ability of the system to respond satisfactorily to the power demands made on it ; in fact, it seems probable that the automatic voltage regulator affords the most important contribution to system stability, which, after all, is largely a matter of voltage regulation. The information relating to automatic regulators is very scattered, and I have endeavoured to weld it into a coherent story.

The synchronizing of the turbo-generators now installed in large power stations must be very accurately performed if heavy current surges are to be avoided, and so the tendency is to employ automatic devices for this purpose. Accordingly, a chapter is devoted to this subject.

The increase in size of electric power stations and their interconnexion has very greatly increased the amounts of energy liberated for destructive purposes on the occurrence of short-circuits, and this has necessitated the focusing of attention upon the improvement of circuit breakers in order that they may break larger currents in shorter times, and to system design from this viewpoint. Also the concentration of large aggregations of generating plant in individual power stations has rendered necessary the sectioning of the switchgear so that the whole should not be involved in a conflagration should a fire, or other disaster, occur. Since the nerve centre of system control is obviously embodied in the switchgear and the considerations governing its arrangement, considerable space has been devoted to this aspect of system design.

The controlling of the voltage and power factor of lines interconnecting electric power stations, and of the current distribution in ring mains, is evidently a subject of the first importance, and accordingly two chapters are devoted to these matters, in which methods of automatic and remote control of boosting plant are also discussed.

A final chapter deals with the principles of what is perhaps the most modern development of system control. Supervisory control systems provide reliable means of effecting all system operations and obtaining instrument readings from a distance at the control room, thereby permitting the control to be centralized.

Thus the plan of the book has been traced and the reasons influencing the selection of the material will perhaps become apparent. Much more could have been written without the restrictive limitations of space but I have endeavoured to choose, from a very wide range, those matters upon which practising engineers engaged in electric power system operation, and students specializing in power engineering, should be informed.

Most of the line diagrams have been specially prepared, but I have not hesitated to use diagrams and photographs kindly supplied by manufacturers where these provide the best means of illustrating modern practice. It would, for instance, have been difficult if not impossible to deal adequately with the subject of circuit breakers without the co-operation of makers which has so readily been extended to me. In this connexion, my thanks are due to the Metropolitan-Vickers Electrical Co. Ltd., the British Thomson-Houston Co. Ltd., Everett, Edgcumbe and Co. Ltd., the English Electric Co. Ltd., Siemens-Schuckert, Ltd., and Brown-Boveri and Co. Ltd. My thanks are also due to the Automatic Telephone and Electric Co. Ltd., for information and drawings supplied in connexion with the preparation of Chapter XI, to the Institution of Electrical Engineers for permission to reproduce a number of diagrams from the *Journal*, to the Institution of Civil Engineers for permission to reproduce Fig. 109, and to the American Institute of Electrical Engineers for permission to reproduce Figs. 46 and 124.

Since in a work of this kind, it is obviously the author's duty to survey and to interpret contemporary literature, I have to thank all those authors whose work I have consulted in the preparation of this volume.

Finally, it is a very pleasant duty to express my gratitude to my friends and colleagues, Mr. B. Wood, M.A., and Mr. A. G. Warren, M.Sc., both of whom have read through the manuscript and made important suggestions for its improvement, and also to my son, Mr. J. D. Young, for assistance in checking the typescript.

H. P. YOUNG.

THE POLYTECHNIC, LONDON.

CONTENTS

CHAPTER I

PARALLEL OPERATION OF GENERATORS

D.C. Generators.—When a number of D.C. generators are connected in parallel, and are supplying a load *via* the busbars, the proportions of the total load taken by the individual machines depend upon the values of their generated e.m.f's. If, therefore, the speeds of the machines are assumed to be constant, their individual loads may be controlled by means of the field rheostats. For instance, if it is desired to increase the load given by one of the machines, the resistance of its field circuit is decreased, thus increasing the airgap flux per pole and consequently the generated e.m.f. Under this condition, an increased current must flow from the machine in question to the busbars.

Let there be two D.C. generators connected to the busbars, let E_a and E_b represent their generated e.m.f's, and I_a, I_b, R_a, and R_b their armature currents and armature resistances respectively. If V represents the busbar voltage, then

$$E_a = V + I_aR_a$$
$$E_b = V + I_bR_b.$$

If the value of E_b be now increased, it is evident that I_b must increase, and if the resistance of the load connected to the busbars remains constant, a corresponding reduction of the current I_a must take place, thus equalizing the terminal voltages of the two machines which will rise slightly from the original value V. It will thus be evident that the load proportions and also the busbar voltage may be adjusted to any desired values by varying the field currents.

It will, however, be clear that the operation of the field rheostat is but a means to an end, since any variation of the output given from a generator must be accompanied by a corresponding variation of the input obtained from its prime mover. Thus, if the e.m.f. of one generator is increased, an increase in the power output is immediately obtained, but this condition is momentarily unstable since input is now less than output + losses. The speed of the machine must consequently decrease, thereby supplying the deficiency by parting with the kinetic energy stored up in its rotating parts. This decrease in speed, however, initiates the operation of the governor mechanism, thus admitting more steam into the engine driving the generator, and restoring the necessary balance between input and output plus losses. The field rheostat of a D.C. machine may evidently be regarded as a mechanism capable of operating the valve gear which controls the admission of steam into the prime mover.

Automatic Load Sharing of D.C. Generators.—If the resistance of the load connected to the busbars be decreased, an increase of current will, of course, result. Each generator will take its share of this increased load in such proportions that their terminal voltages, V, will remain equal. If $E_a = E_b$ and $R_a = R_b$, it will be clear from the above equations that the increased load will be equally shared between the machines.* If, on the other hand, the resistance of machine A is twice that of machine B, then the proportion of the extra load taken by machine A will be half that taken by machine B, since these proportions of current are necessary in order to make their terminal voltages again equal; and this latter condition is, of course, necessary for parallel operation.

The following example will serve to illustrate the method of calculating the load currents delivered by D.C. generators operating in parallel. Although the example deals with two machines only, it will be obvious that the load currents of any number of generators could similarly be calculated.

Two generators are operating in parallel and their external characteristics are as follows:

Generator	A	B
No-load voltage	510	540
Full-load voltage	460	460
Full-load current	200	300

What current will each generator give when the load current is 346 amperes? Assume linear voltage-load characteristics.

The problem is solved in the following manner:

$$E_a = V + I_aR_a$$
$$E_b = V + I_bR_b$$
$$\therefore V = E_a - I_aR_a = E_b - I_bR_b \quad . \quad . \quad . \quad (1)$$

---

* It is assumed here that the airgap fluxes of the machines are unaffected by the fields set up by the ampere-turns of the armatures, and that, in consequence, their generated e.m.f's are independent of their loads.

and $$I_aR_a - I_bR_b = E_a - E_b = -30 \qquad (2)$$

$$R_a = \frac{E_a - V}{I_a} = \frac{510 - 460}{200} = 0{\cdot}25\Omega \qquad (3)$$

$$R_b = \frac{E_b - V}{I_b} = \frac{540 - 460}{300} = 0{\cdot}267\Omega \qquad (4)$$

Substituting values of (3) and (4) in (2):

$$0{\cdot}25\, I_a - 0{\cdot}267\, I_b = -30$$

also $$I_a + I_b = 346$$

whence $$I_a = 119{\cdot}5 \text{ A}$$

$$I_b = 225{\cdot}5 \text{ A}$$

and from (1), $$V = 480{\cdot}1 \text{ volts.}$$

Fig. 1 illustrates the voltage-load characteristics of the two machines, and it will be seen therefrom that any straight line, such as PQ, drawn parallel to the base line, and cutting the characteristic lines, will give the machine loads corresponding to any total load and busbar voltage. The characteristics also shew that when the total load is 112 amperes, the load

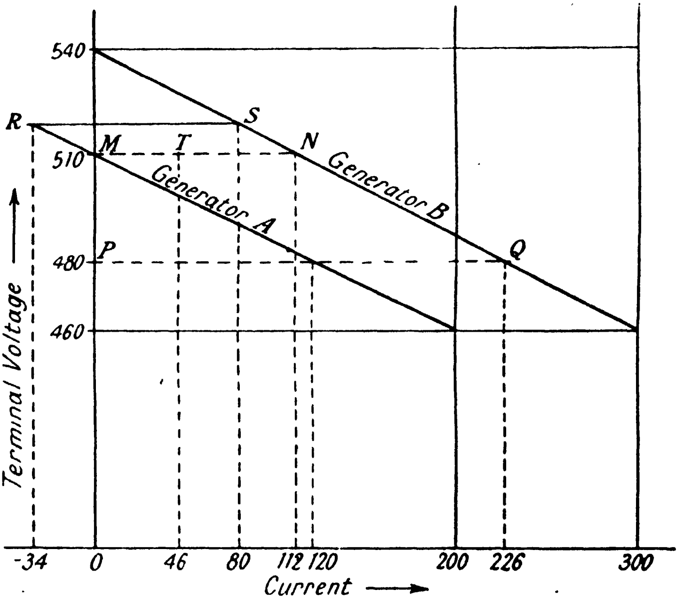

Fig. 1.

on machine A will be zero, since under this condition the busbar voltage is equal to the open-circuit voltage of generator A (see line MN). If the total load falls below 112 amperes, generator B will drive generator A as a motor, the IR drop in the armature of generator A being now reversed, it must be *added* to its e.m.f., thus restoring equality of terminal potential differences of the two machines; thus the line RS shews that when the load on generator B is 80 amperes, the load absorbed by machine A is 34 amperes. The current in the armature of machine A could be reduced to zero by reducing the field current of machine B, thereby moving its characteristic line downwards until it cuts MN in T, where MT corresponds to 80 − 34 = 46 amperes.

The foregoing considerations shew that D.C. generators operating on the same busbars will only automatically share the total load in the same proportions as their kW capacities, if their no-load voltages are equal and their external characteristics are identical.

Parallel Operation of Over-compounded Generators.—Over-compound-wound generators connected in parallel will be unstable unless their series field windings are connected in parallel by means of an additional connexion known as an equalizer busbar. This connexion is shewn in Fig. 2. If the equalizer busbar be omitted, and the generated e.m.f. of (say) machine A momentarily rises by a small amount, then this machine will, of course, give an increased current, while the load on machine B will be correspondingly decreased. Since the series ampere-turns help to magnetize the airgaps of their respective machines, the e.m.f. of A will further rise while that of B will be reduced. This action is cumulative, until ultimately the airgap flux of machine B would vanish, leaving its armature winding short-circuiting the busbars. In practice, of course, the circuit breaker protecting one of the machines

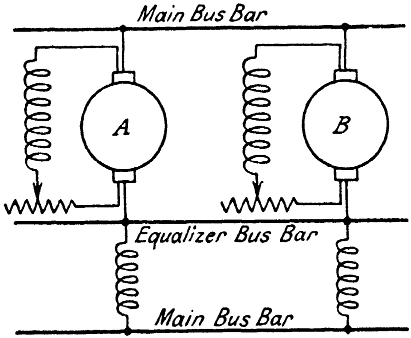

Fig. 2.

would operate either on overload or reverse current before this disastrous condition was reached.

When an equalizer busbar is employed, the series windings no longer belong exclusively to their respective generators. Should the e.m.f. of any one of the generators now rise momentarily, the increased current consequent thereon will be satisfactorily distributed amongst the series windings, provided that the resistance of the equalizer busbar is negligible compared with the resistance of any one of the series windings.

Parallel Operation of A.C. Generators.—The power output of an A.C. generator is, as in the case of a D.C. generator, determined solely by the input of steam to its prime mover, but in the case of the A.C. machine, the steam input cannot be controlled by speed variation effected *via* the field rheostat, since the set must run in synchronism with others which are connected to the busbars. (It will be shewn that the effect of varying the excitations of A.C. generators operating in parallel is simply to vary their relative power factors.)

Effect of Change of Excitation of A.C. Generators.—In a direct-current machine the open-circuit voltage cannot differ from the terminal voltage by more than a few per cent. The difference between the two voltages is brought about by (*a*) armature resistance, (*b*) armature reaction. The drop on armature resistance cannot be large, otherwise the machine would be hopelessly inefficient, and the effects of armature reaction must be limited in order to secure reasonable commutation. The same conditions do not hold in the case of an A.C. generator. Here the open circuit voltage may differ quite considerably from the terminal voltage on load.

The polyphase generator connected to infinite busbars * is the simplest case to consider. The rotating airgap flux is

---

* Due to the National Electricity System (colloquially known as the "Grid"), numerous very large power stations operate continuously in parallel so that the aggregate capacity of generating plant interconnected may amount to hundreds of thousands of kilovolt-amperes. If one single synchronous machine connected to this system is considered, it will be evident that no change in its operating conditions can cause any discernible change in the operating conditions of the system, for the kVA of the former is but a small fraction of the latter. Such a system, then, may be regarded as a source of voltage and frequency, both of which are absolutely constant in all circumstances. The single synchronous machine, when connected to a system which in comparison may be regarded as infinitely large, is operating on what may be termed *infinite busbars.*

determined by two sets of ampere-turns; (1) those provided by the direct-current in the windings of the field poles—these poles are driven round mechanically by the prime mover; (2) those provided by the alternating currents in the stator windings—these currents would, if acting alone, produce a field in the airgap rotating at synchronous speed. It may therefore be considered that there are two rotating field systems, space displaced with respect to one another by an angle depending upon the phase of the alternating currents in the stator windings. One of these is the actual physical system which is driven mechanically, the other is provided by the stator currents and is revolved electrically. This interpretation is not exact since, owing to the non-linear magnetic characteristic of an air-iron circuit, the airgap flux is not the vector sum of the fluxes which the two magnetomotive forces would separately produce, but the resultant is determined by the vector sum of the separate magnetomotive forces.

The airgap flux is a space vector, but with reference to a stator conductor it may be interpreted as a time vector, 90 degrees ahead of the vector voltage which it produces. The magnetomotive force of the stator current, when in phase with this voltage, is such that when acting alone it would produce a cross field lagging 90 degrees behind the resultant airgap flux; a current leading by 90 degrees thus provides a magnetomotive force which is in phase with the airgap flux and is directly magnetizing; a current lagging by 90 degrees provides a magnetomotive force which is in antiphase to the airgap flux and is directly demagnetizing. Thus the change in voltage produced by armature reaction is similar to the voltage which would be dropped upon a fictitious inductance (unfortunately varying somewhat in value with the load) included in the stator circuit. The similarity will be obvious from a study of Fig. 3, in which the effects of stator magnetomotive force are shewn in the left-hand space diagrams and the effects of the fictitious inductance above referred to are shewn in the corresponding time diagrams. A voltage E′ is induced in the fictitious inductance L due to the stator current, and a voltage E is induced in the stator windings by the rotating magnetic field set up by the field magnetomotive force. It will be evident that, in cases (*b*) and (*c*), the effects of the stator m.m.f., which generates the stator flux Φ_s, are respectively to strengthen and weaken the airgap flux.

It is therefore seen that in addition to the resistance drop (which is small and may, from some viewpoints, be neglected) there are two factors due to the stator current similarly affecting the terminal voltage for a given excitation. There is the reactive drop due to that fraction of the stator flux which does not cross the airgap and link the rotor windings, and there is a modification of the airgap flux. Thus the total change in voltage due to the load is the sum of the change in generated voltage and the reactive drop. Since the relation between the generated voltage and the effective magnetomotive force is not linear, it is necessary to take account of both these components when the quantitative effect of changes in excitation or driving torque have to be estimated. A great and justifiable simplification is effected, however, when qualitative effects only are being investigated by assuming either (*a*) the armature reaction to be imagined increased to take account of the reactive drop (ampere-turn method) or (*b*) the leakage reactance to be imagined increased to take account of the

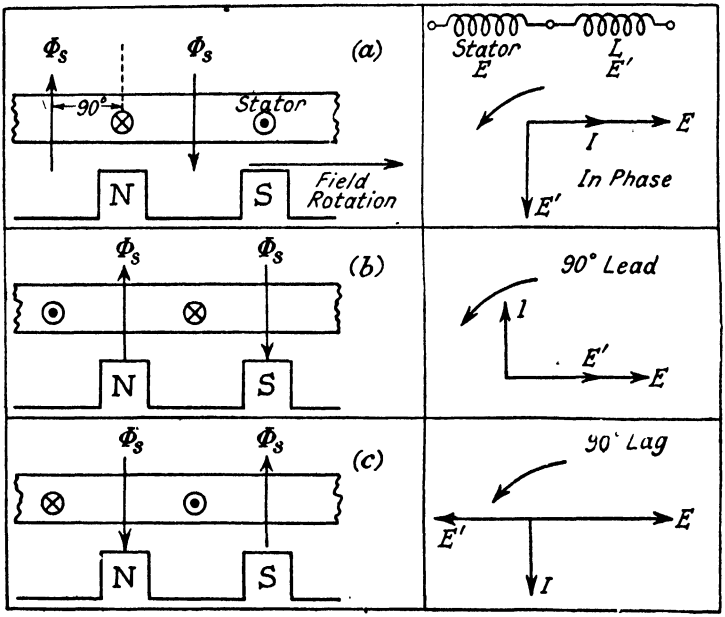

FIG. 3.

armature reaction. In what follows, the second alternative is adopted. The vector diagram of an A.C. generator on load is thus Fig. 4, in which V is the terminal voltage, IZ the synchronous impedance drop, made up of the two components IR, the resistance drop, and IX, the equivalent reactive drop, and E is the generated voltage, determined by the exciting current. When the resistance drop can be neglected, the diagram simplifies to Fig. 5. When the current lags behind the voltage, E is greater than V. For a leading current conditions tend to be reversed as shewn in Fig. 6, which gives the case of a slightly leading current where E has the same value as V.

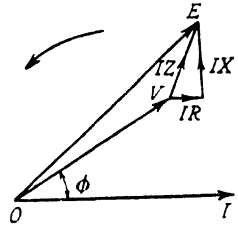

Fig. 4.

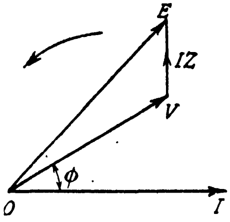

Fig. 5.

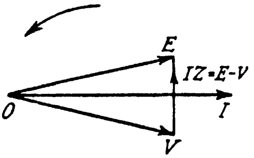

Fig. 6.

In the case of an alternating-current generator connected to infinite busbars, the speed of rotation is fixed. Any change in excitation, without change in the driving torque of the prime mover, cannot affect the total power delivered by the generator (except to a slight degree due to change in losses in the machine), and the current is delivered at a different power factor. If the excitation be fixed, and more steam be admitted to the prime mover, there will be a tendency to gain speed. The effect is to advance the field system, thereby increasing the power delivered by the generator; stability is again reached when driving and resisting torques become equal. These conditions will be more closely examined.

Suppose the generator, connected to infinite busbars of voltage V, be so excited that its generated voltage E is equal to V. Also suppose that the steam admitted to the prime mover be so adjusted that the equivalent friction losses (including hysteresis, etc.) are just supplied, so that E is in phase with V. Clearly there is no circulating current between the generator and busbars and there is no exchange of power. Now suppose the steam admitted to the prime mover to be increased. There is at once a tendency for the field system of the generator to gain in speed, and in consequence the vector E gains on the vector V. Since E is no longer equal to V, except in magnitude, there is a resultant voltage E − V (a *vector* difference), and a current I (the vector quotient (E − V)/Z) which lags by 90 degrees, neglecting resistance, behind E − V. The vector diagram is given in Fig. 6. The power delivered to the busbars is the vector product of V and I, and that delivered by the prime mover to the generator is the vector product of E and I. These are equal since, in this approximate analysis, resistance has been neglected. Speed stability is attained when the vector product of V and I is equal to the power supplied to the prime mover, neglecting friction.

The case is now considered of a generator supplied with a constant amount of power whilst the exciting current is varied. The machine is connected to infinite busbars of voltage V, represented by OV in Fig. 7. The initial exciting current is such that the generated voltage is represented by OE. The power involved is the vector product of V and I, or VI cos ϕ. If V is drawn horizontal, then constant power necessitates that the projection of I on to the horizontal is constant. But I is proportional to and perpendicular to IZ (E − V), and therefore the projection of IZ on the vertical is constant.

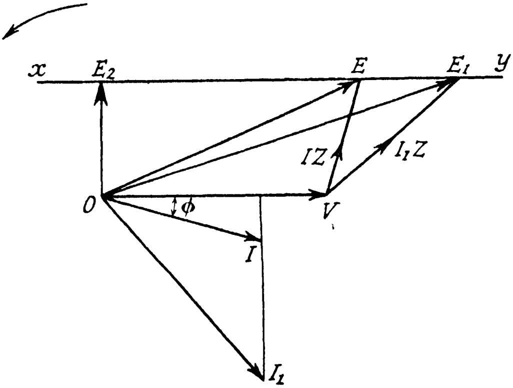

FIG. 7.

Thus it is evident that for constant power, whatever the excitation, the locus of OE is the horizontal line *xy*. If the exciting current be increased, the immediate tendency is for the generator to supply more power; since, however, the input received from the prime mover is constant, this condition is unstable, and consequently E falls back to some phase E_1, I increases in magnitude to I_1, but its angle of lag increases, thereby maintaining the power constant. A small reduction in the exciting current from the initial condition makes IZ vertical and the power factor becomes unity. Further reduction in the exciting current causes the stator current to lead the voltage. The minimum generated voltage to maintain the same power is represented by OE_2, in quadrature with OV. Any attempt to reduce the generated voltage below this value must result in the generator racing up out of synchronism if the power supplied by the prime mover is maintained. If, however, the power supplied by the prime mover is but a fraction of the rated output of the machine at unity power factor, this condition may never be attained, even if the field current is completely interrupted; residual magnetism may be sufficient for the generation of the minimum voltage required in these conditions.

In employing the synchronous impedance method, it has been implicitly assumed that the airgap flux varies over very wide limits as the exciting current is varied. Had the ampere-turn method been employed, it would again have been implicitly assumed that the airgap flux was constant. Actually, of course, the truth lies between these two extremes, and when the exciting current is reduced to zero, there is an airgap flux well in excess of that due to residual magnetism alone. Some experiments carried out in America on generators having capacities ranging from 8,000 to 65,000 kW, connected to large systems, seem to indicate that the field circuits of the largest machines can be opened and reclosed without serious disturbance to the operating conditions, providing the voltage is automatically regulated or the system is large enough. In connexion with this matter, the following readings, taken on a 35,000 kVA generator operating in parallel with the Chicago Commonwealth Company's system, will be of interest: *

---

* *Transactions Amer. I.E.E.*, 1931, Vol. 50, p. 1194, "Re-establishing Excitation of a Loaded Alternator in Parallel with Others," by D. D. Higgins and E. Wild.

	Busbar volts	Machine amperes	Machine kW	Machine power factor
Before test .	12,400	1,000	15,000	0·72 lag
Field open .	11,200	2,000–2,600	14,000–15,000	Off scale Leading
After test .	12,400	900	15,000	0·78 lag

The field switch was left open for approximately 1·5 minutes on this test. The change in current and power factor after the field switch was reclosed was due to increase in excitation in other stations connected to the system and on other generators in the same station while the field switch was open.

Maximum Load of an A.C. Generator.—Owing to the serious consequences which may arise through a generator falling out of synchronism, limiting conditions are of great importance. It has been shewn that a generator may be connected to the busbars and remain unloaded. This is one limiting condition, the opposite limit being the maximum load the machine can deliver whilst remaining in synchronism. It is a simple matter to determine the maximum power which a generator, with constant excitation and connected to constant voltage and constant frequency busbars, can give, and also the power factor at which this occurs. Referring to Fig. 4, let E represent the open-circuit e.m.f. of the machine, V the busbar voltage, and R, X and Z the resistance, synchronous reactance and impedance of the stator winding per phase respectively. If the machine delivers a load current I at a power factor cos ϕ to the busbars, then the power in watts

$$= P = VI\cos\phi \text{ or } VI = \frac{P}{\cos\phi}$$

$$\text{and } I^2 = \frac{P^2}{V^2}(1 + \tan^2\phi).$$

From the diagram,

$$\begin{aligned} E^2 &= (V\cos\phi + IR)^2 + (V\sin\phi + IX)^2 \\ &= V^2\cos^2\phi + 2VIR\cos\phi + I^2R^2 + V^2\sin^2\phi \\ &\qquad + 2VIX\sin\phi + I^2X^2 \\ &= V^2 + I^2Z^2 + 2VI(R\cos\phi + X\sin\phi) \\ &= V^2 + \frac{P^2Z^2}{V^2}(1 + \tan^2\phi) + 2P(R + X\tan\phi) \end{aligned}$$

Writing $\tan\phi = y$

$$\frac{P^2Z^2}{V^2}(1 + y^2) + 2P(R + Xy) + V^2 - E^2 = 0 \quad . \quad . \quad (1)$$

This is the relation between the power and the power factor (or, more strictly, tan ϕ, which defines the power factor). For the maximum value of the power, $\frac{dP}{dy}$ must be zero. Differentiating (1) with respect to y, and omitting all terms multiplied by $\frac{dP}{dy}$ gives:

$$\frac{P^2Z^2}{V^2}.2y + 2PX = 0 \text{ or } y = -\frac{XV^2}{PZ^2} \quad . \quad . \quad (2)$$

Substituting this value of y in (1) gives:

$$\frac{P^2Z^2}{V^2}\left(1 + \frac{X^2V^4}{P^2Z^4}\right) + 2P\left(R - \frac{X^2V^2}{PZ^2}\right) + V^2 - E^2 = 0$$

or $$\frac{Z^2}{V^2}P^2 + 2PR + \frac{R^2V^2}{Z^2} - E^2 = 0$$

$$\left[\text{since } V^2 = V^2\left(\frac{R^2 + X^2}{Z^2}\right)\right]$$

whence $$P_{max.} = \frac{-2R + \sqrt{4R^2 - 4\frac{Z^2}{V^2}\left(\frac{R^2V^2}{Z^2} - E^2\right)}}{2\frac{Z^2}{V^2}}$$

$$= -\frac{RV^2}{Z^2} + \frac{V^2}{Z^2}\sqrt{R^2 - R^2 + \frac{Z^2}{V^2}E^2}$$

$$= -\frac{RV^2}{Z^2} + \frac{VE}{Z}$$

$$= \frac{V}{Z}\left(E - \frac{R}{Z}V\right) \quad . \quad . \quad . \quad . \quad . \quad . \quad (3)$$

If R is assumed to be negligible in comparison with X, equation (3) degenerates to

$$P_{max.} = \frac{VE}{X}.$$

The power factor corresponding to $P_{max.}$ is given by substituting from equation (3) in equation (2), giving

$$y = -\frac{XV^2}{\frac{V}{Z}\left(E - \frac{R}{Z}V\right)Z^2}$$

or $$\tan\phi = -\frac{XV}{EZ - RV} = \frac{XV}{RV - EZ}$$

$$\cos\phi = \frac{RV - EZ}{\sqrt{X^2V^2 + R^2V^2 + E^2Z^2 - 2RZEV}}$$

$$= \frac{RV - EZ}{\sqrt{Z^2(V^2 + E^2) - 2RZEV}}$$

Since V depends upon the excitation, it will be evident from equation (3) that the maximum power which can be supplied by the generator will be greater if the excitation is high. This is obviously a conclusion of great importance.

Automatic Load Sharing of A.C. Generators.—If several generators are connected in parallel and are supplying a common load, it is usually desirable that the generators shall share the load in proportion to their kVA capacities. The actual division of the total kW load will depend upon the speed-load characteristics of the prime movers, and the division of the total reactive kVA will depend upon the voltage-load characteristics of the generators. Suppose, for instance, that two generators have been synchronized and that the speed-load characteristics of the prime movers are such that the speed of one decreases 3 per cent with a load of 2,000 kW, while the speed of the other decreases 3 per cent with a load of 3,000 kW. If the power demanded from the busbars is 2,500 kW, it will be clear that the first generator will supply 1,000 kW and the second 1,500 kW, since both must operate at the same electrical speed. The speed drop of both machines corresponding to this load will be 1·5 per cent. Since the terminal voltages of both machines must be identical, their relative excitations, as previously shewn, will determine the proportions of the reactive kVA supplied by each machine. In practice it is always possible to adjust both the speed and the generated e.m.f., and thus the question of automatic load sharing only arises when load conditions change.

Synchronizing Power, Current and Torque.—Although generators running in parallel must be in synchronism, momentary variations in speed occur whenever the operating conditions are disturbed. Whenever such variations occur, restoring forces are set up tending to maintain stability. This tendency of a generator to remain in synchronism is a most important feature of its design, and the characteristics known as synchronizing power, synchronizing current and synchronizing torque all have a bearing upon this aspect of operation. Desirable values for these characteristics are a matter of experience and depend upon the precise operating conditions, but their calculation for any particular machine is a relatively simple matter.

Synchronizing Current.—Imagine an A.C. generator to be connected to infinite busbars and carrying its share of the total load. If, now, due to some reason, the load on the machine considered is decreased, the input momentarily exceeds output plus losses, it being assumed that the governor, due to inertia and friction, does not respond. Consequently the field system forges ahead of its synchronous position. Imagine that the load is now restored to its former value, then the rotor will obviously tend to come back to its original position, corresponding to the original load of the machine. When, however, the rotor arrives at this position, its actual speed is less than the synchronous speed, and due to its mass, it will continue to fall back in phase, thus tending to desynchronize itself.

The resulting divergence between the vectors representing the busbar and considered generator voltages respectively, however, produces a current which acts to maintain synchronism between them, and this current is therefore termed a synchronizing current. A reference to Fig. 8, in which V and E represent the busbar and generator voltages respectively, will make this matter clear. If, now, the load decreases, the vector E swings forward, thus creating the unbalanced voltage E_s, which circulates the synchronizing current I_s round the stator winding. Neglecting stator resistance, this current makes an angle $\frac{\alpha}{2}$ with the voltage vector OE and

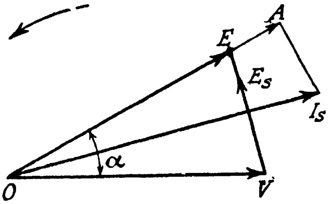

Fig. 8.

its active component OA, being in phase with OE, acts to arrest the forward acceleration of the rotor. Now suppose the load on the generator under consideration increases, so that the input is momentarily less than output plus losses. In this case, the voltage vector OE swings backwards in phase and overshoots. This condition is shewn in Fig. 9, from which

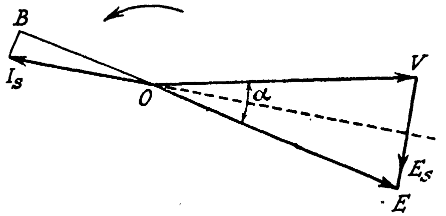

FIG. 9.

it will be seen that the active component of the synchronizing current, OB, is now in phase opposition to the voltage vector OE. This current, I_s, circulating in the stator windings, is a motor current, and it acts to advance the vector OE.

It will be evident that when changes of load occur, thereby bringing into action forces which tend to desynchronize the generator, the phase of the current I_s is always such as to oppose desynchronization, that is, to keep the generator in synchronism.

It is necessary to distinguish clearly between a synchronizing current and a load current ; the latter flows, of course, steadily from generator to load when the voltage vector is rotating synchronously with the busbar voltage. The synchronizing current, on the other hand, is born at the instant when the rotor is accelerated or retarded, i.e., when the rotor speed differs from the true synchronous speed, and it lives only as long as this mechanical oscillation lasts.

Calculation of Synchronizing Current, Power and Torque.—Since the mechanical forces arising from unbalanced electrical conditions are concerned in what follows, a brief review of the relations between the mechanical and electrical units will not be out of place. The absolute electrical units are based upon the centimetre-gramme-second system. Between these absolute units and the practical units, certain factors (powers of 10) exist. The practical electrical units are much more directly related with the metre-kilogram-second system. In this system the relevant mechanical units are the big dyne, the joule and the watt.* The big dyne is the force which produces an acceleration of one metre per second per second in a mass of one kilogram. When this force operates through a distance of one metre the work done is one joule. The unit of power is the watt—the doing of one joule of work per second. The electrical units are the volt and the ampere. The ampere is defined in terms of the magnetic field it produces when flowing in a particular conductor. The ampere having been fixed, the magnitude of the volt is defined so that the product of the volt and ampere is equal to the mechanical unit, the watt. In the following argument it is understood that the mechanical units involved are those given above.

If it is assumed that the generator under consideration is connected to infinite busbars, then $I_s = \frac{E_s}{Z}$ when Z represents the synchronous impedance of the machine per phase, since the impedance of the other generators will be negligibly small. If E represents the open-circuit voltage per phase and I_0 the short-circuit current corresponding to this voltage, then

$$Z = \frac{E}{I_0}$$

so that $$I_s = \frac{E_s}{E} I_0$$

But, from Fig. 8, $$E_s = 2E \sin\frac{\alpha}{2} \checkmark$$

and $$\frac{E_s}{E} = 2 \sin\frac{\alpha}{2} = \frac{I_s}{I_0}$$

so that $$I_s = 2I_0 \sin\frac{\alpha}{2}. \checkmark$$

Let θ denote the mechanical angle of displacement corresponding to the phase angle α and p denote the number of pairs of poles, then $\alpha = p\theta$

and $$I_s = 2I_0 \sin\frac{p\theta}{2}.$$

In the case of two generators of identical sizes and characteristics, the synchronizing current acting between them would

---

* It is not uncommonly believed that the watt is an electrical unit; it is not, it is a mechanical unit.

be one-half of that prevailing in the previous case, since the impedance would, of course, be doubled. The synchronizing current would, however, act equally on both machines, accelerating one and retarding the other, so that the resultant effect would be the same as in the case previously considered.

The synchronizing power of a generator connected to a system of infinite busbars is

$$\begin{aligned} W_p &= EI_s \cos\frac{\alpha}{2} \text{ watts per phase} \\ &= EI_0\, 2\sin\frac{\alpha}{2}\cos\frac{\alpha}{2} \\ &= EI_0 \sin\alpha. \end{aligned}$$

Since, for small values of α, measured in radians, $\sin\alpha$ is very nearly equal to α

$$W_p = EI_0\alpha \text{ watts per phase.}$$

It is thus evident that the synchronizing power is directly proportional to the angle of phase displacement of the rotor from the true synchronous position corresponding to the output. The synchronizing power of an m-phase generator will be

$$W_s = mEI_0\alpha,$$

since it will be evident that all the phases will combine to oppose the desynchronizing forces.

If n is the speed of the rotor in revolutions per second, then the angular velocity is $2\pi n$ radians per second. If T_s is the synchronizing torque (in newton * metres) the synchronizing power must be

$$W_s = mEI_0\alpha = 2\pi n T_s$$

or

$$T_s = \frac{mEI_0\alpha}{2\pi n} = \frac{mEI_0 p\theta}{2\pi n} = c\theta$$

since

$$\alpha = p\theta.$$

Hence the synchronizing torque per electrical radian $= \dfrac{mEI_0}{2\pi n} = \dfrac{c}{p}$ and the synchronizing torque per mechanical radian $= \dfrac{mEI_0 p}{2\pi n} = c$. To express the synchronizing torque in lbs.-feet, use is made of the conversion factors, one newton

---

* The newton is the unit of force in the metre-kilogramme-second system (M.K.S.). It is that force which, acting on a mass of one kilogramme, gives to it an acceleration of one metre per second per second.

= 0·2247 lbs. weight, one metre = 3·2809 feet, 1 newton-metre = 0·7373 lbs.-feet, so that

$$T_s \text{ (lbs.-feet)} = \frac{mEI_0\alpha}{n} \times \frac{0\cdot7373}{2\pi}$$

or $$T_s \text{ (lbs.-feet)} = 0\cdot11735\frac{mEI_0\alpha}{n}.$$

If the speed is expressed in revolutions per minute (denoted by N)

then $$T_s \text{ (lbs.-feet)} = 7\cdot041\frac{mEI_0\alpha}{N}$$

Free Oscillations.—It has been seen that when a change of load occurs, there is a momentary change in speed of the rotor which overshoots the synchronous position by the angle α. The overswinging of the rotor is limited by the synchronizing torque and mechanical oscillations are thus set up, accompanied by oscillations of the synchronizing current. Such oscillations are termed free oscillations and these would, when once started, continue indefinitely if they were not damped out by losses.

When the armature windings of a polyphase generator carry currents, these currents set up a magnetic field which rotates in the airgap at synchronous speed. If, now, due to any cause the speed of the rotor deviates from synchronism, there is relative motion between the rotor and the field set up by the currents in the armature windings, e.m.f's are generated in the rotor iron and eddy currents circulate therein. These eddy currents must, by Lenz's law, be so directed as to oppose the relative motion of the rotor and the magnetic field and, if the resistances of their paths be low, they will set up viscous forces tending to damp out the oscillatory motion of the field system. The force called into play is proportional to the strength of the eddy currents, and these are proportional to the oscillatory speed $\frac{d\theta}{dt}$. This force tends to damp out the motion and it may be expressed as $a\frac{d\theta}{dt}$.

General Equation of the Motion of the Rotor.—The treatment given so far is inadequate in that, except in the immediately preceding paragraph when considering viscous forces due to eddy currents, the effect of the deviation of the *speed* from synchronism has not been taken into account; only the effect of the *displacement* from the synchronous position under load has been considered. In general, a displaced rotor will not be running at synchronous speed; as it is regaining its position from a backward displacement, its speed exceeds that of synchronism; conversely, when falling back to its normal position from a forward displacement, its speed is less than that of synchronism. A full analysis of such conditions is of great complexity and is beyond the scope of the present book. For instance, in the case of a single-phase generator running steadily, the torque varies throughout the revolution; " unsteady " running introduces variations or modulation of this normal cyclic variation and the equations of motion are very complex. A general idea of the conditions prevailing may be obtained from consideration of a polyphase generator working steadily on a balanced load, the wave-form being perfectly sinusoidal. In this case, when running steadily, the torque is constant throughout the revolution, and the driving torque is equal to the resisting torque not only on the average but at every instant. Imagine now that the generator load is slightly increased, so that the input is momentarily less than the output plus losses. Since a change of speed must precede operation of the governor mechanism, the rotor will lag momentarily behind the true synchronous position, and under this condition a synchronizing torque will be born. This synchronizing torque, due to any displacement, has been shewn to be of magnitude $c\theta$. This is, however, only the extra torque introduced *directly* by the *displacement*. If, now, the extra load be at once removed, the synchronizing torque $c\theta$ becomes available for accelerating the rotor and the angle θ diminishes. At any particular value of θ, as θ is diminishing, the angular speed of the rotor is above that of synchronism by an amount $-\frac{d\theta}{dt}$. For this reason, the condition might be analysed by considering E (of Figs. 8 and 9) to be slightly in excess of V. It is, however, more convenient to consider that, due to the speed being above synchronism, there is a resisting torque introduced which is proportional to the excess of speed over that of synchronism. The magnitude of this resisting torque is represented by $f\frac{d\theta}{dt}$. This is of similar form to the expression for the viscous resisting torque $a\frac{d\theta}{dt}$ considered in the preceding paragraph, so that the total resisting torque $= -b\frac{d\theta}{dt}$ where $b \equiv a + f$, and the restoring torque becomes $c\theta - \left(-b\frac{d\theta}{dt}\right)$. This is equal to the moment of inertia K multiplied by the angular acceleration $\frac{d^2\theta}{dt^2}$

or
$$\mathrm{K}\frac{d^2\theta}{dt^2} = -\left[b\frac{d\theta}{dt} + c\theta\right].$$

This equation completely specifies the conditions since the synchronous driving torque and the resisting torque of the generator cancel out, so that the only torque components that need to be considered are $c\theta$, which is due to the phase displacement, and $b\frac{d\theta}{dt}$, which is due to the speed being momentarily incorrect. The general equation of the motion of the rotor is evidently :

$$\mathrm{K}\frac{d^2\theta}{dt^2} + b\frac{d\theta}{dt} + c\theta = 0.$$

The solution of this differential equation is of the following form :

$$\theta = k\varepsilon^{-\frac{bt}{\mathrm{K}}} \sin \overline{\alpha t + \beta}$$

where k and β are constants depending upon the boundary conditions and

$$\alpha = \frac{\sqrt{\frac{4c}{\mathrm{K}} - \frac{b^2}{\mathrm{K}^2}}}{2}$$

The nature of the oscillations set up depends almost entirely upon the value and sign of the constant b. If this constant is positive, the amplitude of the oscillation continuously decreases and is finally damped out, but if the constant can possibly be negative, the amplitude of the oscillation increases exponentially, even if the value of b is very small, until the generator falls out of synchronism. Fortunately, however, real viscous forces in the form of eddy currents induced in the pole faces and elsewhere in the rotor structure are generally of sufficient magnitude as to assure a positive value to b. It will be evident that the amplitude of the oscillations will only increase if the kinetic energy stored up in each rotor swing is greater than the energy dissipated due to the swing.

Periodic Time of a Free Oscillation.—If a body, which is acted upon by a controlling torque tending to bring it back to its position of equilibrium when it is disturbed therefrom, is set vibrating, its oscillatory motion obeys a simple harmonic law if the controlling torque is proportional to the angle of displacement from its stable position. Since, in the case of a generator, the synchronizing power may be assumed to be proportional to the angle of electrical displacement, this is a case in which simple harmonic motion will occur.

The fundamental equation for the time of an angular oscillation is:

$$t = 2\pi\sqrt{\frac{\text{moment of inertia}}{\text{torque per radian displacement}}}.$$

Applying this to the vibration of a generator rotor, it becomes:

$$t = 2\pi\sqrt{\frac{K}{T_s/\theta}}.$$

$$\text{But } T_s = W_s/2\pi n = mEI_0\alpha/2\pi n$$

$$\text{and } \theta = \alpha/p, \text{ so that } T_s/\theta = mEI_0 p/2\pi n$$
$$= mEI_0 f/2\pi n^2,$$

where f is the frequency

$$\text{and so } t = 2\pi n\sqrt{\frac{2\pi K}{mEI_0 f}}$$
$$= 2\pi n\sqrt{\frac{2\pi K}{mEIf}\cdot\frac{I}{I_0}}$$

when I is the full-load current of the generator,

$$\text{or } t = (2\pi)^{\frac{3}{2}} n\sqrt{\frac{KI}{(\text{total volt-amperes})fI_0}}.$$

It may be more convenient to express the speed in revolutions per minute, N, and the apparent power in kilovolt-amperes, when the equation becomes:

$$t = \frac{(2\pi)^{\frac{3}{2}}}{60\sqrt{1000}}N\sqrt{\frac{KI}{kVA.fI_0}}$$
$$= 0{\cdot}008\dot{3}N\sqrt{\frac{KI}{kVA.fI_0}}$$

The periodic time is therefore directly proportional to the square root of the moment of inertia and inversely proportional to the square root of the ratio of the short-circuit current to the full-load current. In order that generators should operate satisfactorily in parallel it is advisable that the periodic time of a swing should be long. Thus it is evidently desirable that the ratio $\frac{I_0}{I}$ should be small and therefore the generators should be designed with high inherent reactance.

Free oscillations are set up when a transient change in operating conditions occurs, such as a change in load, but they are generally harmless unless reinforced by a further oscillation. In the case of generators driven by engines of the reciprocating type, forced oscillatory motion is always present, since a cyclic irregularity occurs in the speed of such prime movers. In such cases, should the periodic time of a forced oscillation coincide with the periodic time of a free oscillation, mechanical resonance will occur and the amplitude of the oscillation may increase until the generators are desynchronized. To enable the machines to run satisfactorily in parallel, amortisseur windings may be necessary to increase the damping forces. Fortunately, however, practically all large machines are driven by turbines, and this prime mover is characterized by an even turning moment so that forced oscillations are generally absent. Even in this case, phase swinging may be initiated by hunting of the governors, but owing to the long periodic time of the disturbing effect, no critical condition is likely to occur. Since, in addition, modern generators are designed with high reactance for short-circuit protection, there is no difficulty in maintaining such machines in synchronism.

Economy Loading of Generators.—If a number of generators are sharing the load connected to the busbars, it is obviously a matter of great importance to ensure that the allocation of the load amongst the generators is such that their combined operating efficiency is a maximum. Also when stations are interconnected, it is necessary to decide if the transmission of energy from a highly efficient station to a less efficient station will be justified. Obviously, it will be uneconomical to transmit energy in such a manner if the transmission losses will overbalance the saving of losses in generation. Thus in the latter case, the transmission losses must be considered.

Consider first the simple case of two generators in parallel.

It will be evident that, for each machine, there will be a fixed relationship between its output and input. This relationship is shewn in Fig. 10 for the two machines A and B. Imagine that the outputs are *a* and *b* for the generators A and B respectively, and the corresponding inputs are 27 and 23 or a total of 50. If, now, the output of generator A is decreased by an amount *aa′* and that of generator B increased by a like amount *bb′*, so that the total output is unchanged, the inputs are changed to 20 for A and 33 for B, or a total of 53. Alternatively, if the output of A is increased by an amount *aa″* and that of B decreased by a like amount *bb″*, then the inputs become 35·5 for A and 17 for B, the total input now being 52·5. It is clear that the original distribution of loads is the most economical of the alternatives considered.

Referring again to Fig. 10, it will be shewn that the best

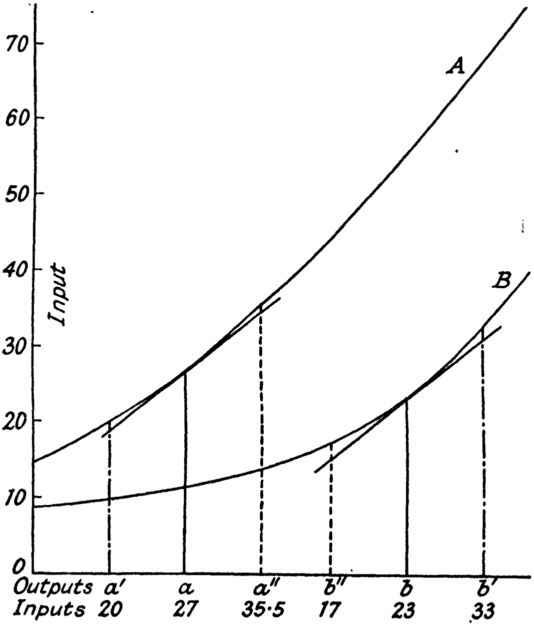

FIG. 10.

division of load results when the slopes of the input/output characteristics are the same. If the input is in British Thermal Units per hour and the output is in kilowatts, the slope at any point is expressed in B.Th.U. per kWh and this is termed the "incremental rate". The reciprocal is appropriately termed the "incremental efficiency". Thus the loads on the generators should be such that their incremental rates are equal, since this condition gives minimum total input. This may be proved in the following manner. For a given fixed total output p, it is required that the load shall be shared between the generators so that the total input P shall be a minimum. The variation in P will be considered as the output p_a of the first generator is varied, the corresponding output of the second generator being

$$p_b = p - p_a \quad . \quad . \quad . \quad . \quad (1)$$

The corresponding inputs to the two generators are respectively P_a and P_b. Since p is constant, $\frac{dp}{dp_a} = 0$, and so on differentiating (1) we obtain

$$\frac{dp_b}{dp_a} = 0 - 1 = -1 \quad . \quad . \quad . \quad (2)$$

Also $$P = P_a + P_b \quad . \quad . \quad . \quad . \quad (3)$$

Differentiating (3) with respect to p_a gives:

$$\frac{dP}{dp_a} = \frac{dP_a}{dp_a} + \frac{dP_b}{dp_a} = \frac{dP_a}{dp_a} + \frac{dP_b}{dp_b} \cdot \frac{dp_b}{dp_a} \quad . \quad . \quad (4)$$

Substituting from (2) in (4) gives:

$$\frac{dP}{dp_a} = \frac{dP_a}{dp_a} - \frac{dP_b}{dp_b} \quad . \quad . \quad . \quad (5)$$

If P is to be a minimum, $\frac{dP}{dp_a}$ must be zero, and therefore:

$$\frac{dP_a}{dp_a} = \frac{dP_b}{dp_b}.$$

Thus the total input will be a minimum for a given total output when the incremental rates are equal.

Variation in Fuel Costs.—For the economic apportionment of load amongst several turbo-generators supplied from the same boiler house, the incremental rates of the turbo-generators would be employed. If, however, some of the generators are supplied from boilers burning coal and the rest are supplied from boilers burning oil, the fuel costs will evidently be different. It will thus be necessary to adjust the incremental rates of the turbo-generators to compensate for this difference, since it will be evident that the incremental rates of the turbo-generators driven by means of the more expensive fuel will be increased.

This modification may be very simply effected by multiplying the incremental rates of the turbo-generator to be adjusted by the ratio of the fuel costs. For example, if the ratio of the fuel costs of two turbo-generators A and B, running in the same station, is 10 : 9, and the incremental rate of turbo-generator A, at a given load, is 11,700, then its adjusted incremental rate will be 11,700 × 10/9 = 13,000, and for minimum total input, the load on turbo-generator B must be such that its incremental rate is also 13,000.

Economy Loading of Stations.—Imagine two power stations linked together by an interconnector. In order to obtain the optimum load allocation between the stations, the transmission losses must evidently be considered. If these losses are negligible, the total input will be a minimum, of course, when both stations are operated at equal incremental rates. If, however, the interconnector losses are appreciable, the load allocation on the stations must be modified accordingly. Suppose, for example, power is transmitted from station A to station B (Fig. 11). If station A has the lower incremental rate, the effect of the transmission losses will be to decrease the overall efficiency of station A (when referred to station B's busbars), i.e., to increase its effective incremental rate. When the latter becomes equal to that of station B, the total input to the combined system will be a minimum. Thus power may be transmitted from a more efficient station to a less efficient station until their incremental rates are equal.

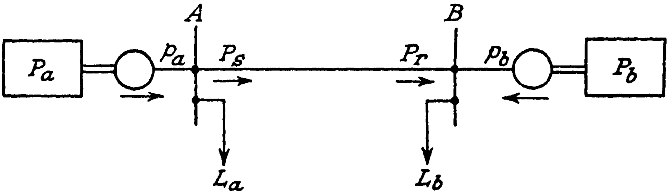

FIG. 11.

The adjustment is effected by modifying the actual incremental rate of either station by introducing a factor to compensate for the transmission losses. This factor is termed the incremental efficiency of the line.

Let the inputs to the stations be P_a and P_b (see Fig. 11), where the combined input to both stations is $P = P_a + P_b$. Let p_a and p_b be the corresponding outputs, P_s and P_r be the kilowatts at the sending and receiving ends of the interconnector respectively, and L_a and L_b represent the network loads of the respective stations, then

$$p_a = L_a + P_s$$
$$p_b = L_b - P_r$$

P will be a minimum when its differential coefficient, with respect to p_a, is zero

$$\therefore \frac{dP}{dp_a} = 0$$

$$\frac{dP_a}{dp_a} + \frac{dP_b}{dp_a} = \frac{dP_a}{dp_a} + \frac{dP_b}{dp_b} \times \frac{dp_b}{dp_a} = 0$$

but
$$\frac{dp_b}{dp_a} = \frac{d(L_b - P_r)}{d(L_a + P_s)} = -\frac{dP_r}{dP_s}$$

since L_a and L_b are constants.

$\frac{dP_r}{dP_s}$ represents the incremental efficiency, η, of the line, and

$\frac{dP_a}{dp_a}$ and $\frac{dP_b}{dp_b}$ represent the incremental rates of the stations A and B. Resymbolizing the latter as S_a and S_b respectively, then

$$S_a - S_b\eta = 0$$

and
$$S_a = S_b\eta$$
$$S_b = \frac{S_a}{\eta}.$$

Thus if the station whose incremental rates are to be adjusted is transmitting power along the interconnector (Station A), its incremental rates must be divided by the incremental efficiency of the line.

Application of Incremental Loading.*—The method of determining the most economical load allocation amongst

---

* For further information on this subject, the references given in the bibliography should be consulted.

turbo-generators in the same station will be understood from Fig. 12. The curves represent the outputs of two turbo-generators A and B plotted against their incremental rates S, the output scale being linear and the incremental rate scale logarithmic. From the curves (and shewn below them), the

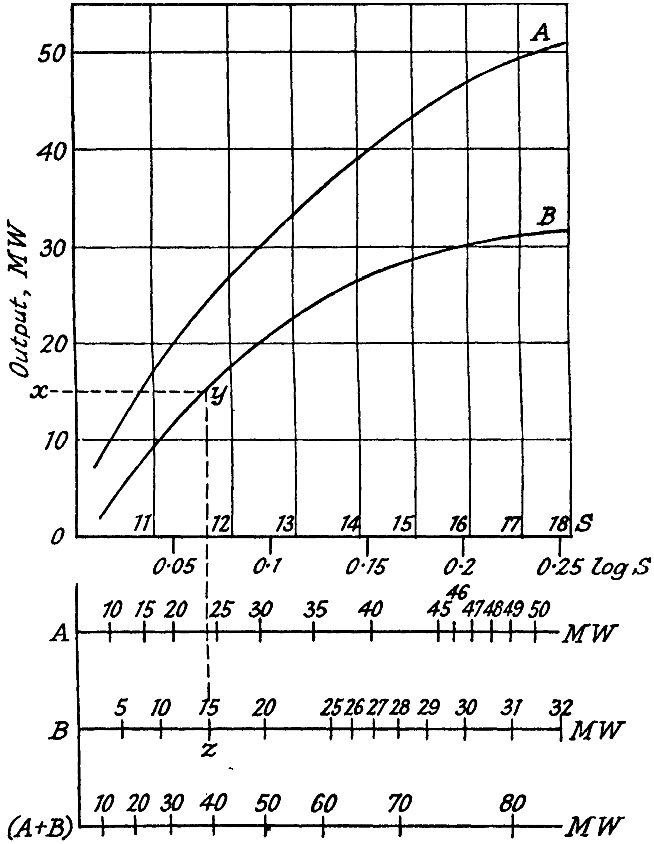

FIG. 12.

loading strip scales for the two turbo-generators A and B have been prepared. The points on the curves referring to the load values are transferred to the strips by projection. As an example, the 15 MW output on B is projected from x to y, and thence to the point z on the loading strip. A further loading strip (A + B) is now prepared for the combined output, the method being merely to add the values of the generator outputs for corresponding values of incremental rates S. Thus for a total output of 80 MW, the individual outputs of generators A and B should be 49 and 31 MW respectively.

As has been seen, when the fuel costs are different, the incremental rate curves of one generator must be correspondingly modified, and when two power stations are interconnected, the incremental rate curve of each station must be prepared, and one curve must then be modified in order to compensate for the transmission losses. After the appropriate adjustment has been made, the individual outputs are then determined from the loading strips in the manner above described.

CHAPTER II

VOLTAGE CONTROL OF A.C. GENERATORS

Exciter Instability.—The instability of an exciter may be defined as its inability to maintain, within close limits, its own voltage when variations occur in the operating conditions of the generator. It is shewn below that quite small changes in conditions may result in a considerable change of exciter voltage. This is reflected in a large change in the generator voltage, with a consequent change in load and hunting with respect to generators in parallel. An exciter with a poor characteristic may thus cause large surges of power between generators when the initial disturbance is quite small; restoration of steady operation may take some time. This type of instability is known as *inherent instability*. With a well-designed exciter, small changes of load of the generator affect the exciter only to a small degree and stable running conditions are restored rapidly after disturbance. If, however, the disturbance of load is sudden and heavy, it is impossible to avoid a tendency to instability which, in bad cases, may result in the reversal of the exciter voltage. This is known as *load instability*. This is treated more fully later, but a simple case will shew how such reversal may take place. Imagine the generator, initially lightly loaded, to be suddenly short-circuited. As has already been seen, this current produces a strongly demagnetizing magnetomotive force and a reversed field is called into being, tending to cancel out the field initially existing. The growth of this reversed field generates an e.m.f. in the field windings of the generator tending to maintain the original field. That is to say, an e.m.f. is generated in the same direction as the exciter e.m.f. and the load on the exciter is greatly increased. The current in the generator field windings (and the exciter armature) may become many times its normal value. The exciter e.m.f. falls, and this fall is accentuated by the consequent weakening of the exciter field. If the short-circuit is sufficiently heavy, the exciter terminal voltage is reduced to zero and current is forced through the exciter field windings in the reversed direction by the e.m.f. generated in the generator field windings.

From this point the generator builds up in the reversed direction.

In the case of a reversal of polarity, the generator field current will reverse, thus causing a reversal of its e.m.f. It will be evident from a careful study of Fig. 8 that, if the voltage OE be reversed, the resultant of OV and this reversed OE will give rise to a large synchronizing current which will be approximately in quadrature with the generator voltage, so that no synchronizing torque will result. The rotor will therefore fall back in phase through 180 electrical degrees, thus "slipping" through one pole pitch. At this instant, the generator is in synchronism, but due to the mass of the rotor the latter will overshoot, thereby (see Fig. 9) giving rise to a synchronizing torque and completing the resynchronizing of the generator. During the time of this transient it will be clear that the system will be subjected to severe voltage and current surges which may cause disturbance and also dislocation, due to the possibility of the operation of the protective switchgear.

It will be evident from the foregoing remarks that exciter instability is of great importance from the viewpoint of the satisfactory operation of A.C. generators, and consequently it is necessary to examine in some detail the causes of instability.

Inherent Instability.—A direct-current generator, which is employed for the purpose of supplying the field current of an A.C. generator, works under entirely different conditions as compared to a generator designed to supply a direct-current load at constant voltage. In the former case, the terminal voltage of the machine may vary between wide limits and thus the B-H characteristic of the exciter field iron will exercise an important influence upon the performance of the exciter. Consider the B-H characteristic OADBG shewn in Fig. 13, which gives the general form of curve relating to a shunt-wound direct-current generator. Let the point B on the curve represent the normal operating flux density and voltage (since at constant speed voltage is proportional to flux density), then the resistance of the field circuit, including that of the field rheostat, is given by the ratio $\frac{BC}{OC}$ = tan BOC (to scale).

Assume now that the resistance of the field circuit is maintained at a constant value R and that the field current and the corresponding terminal voltage of the generator are represented by OC and BC respectively. It will be evident that BC also defines the voltage drop in the field circuit and the line OB (provided that the field resistance is unaltered) represents the field IR drop corresponding to different values of the field current. A little consideration will shew that, under the conditions specified, the voltage of the generator is inherently stable at this point B. For if the voltage tends to rise, i.e., the point B tends to move towards G along the B-H characteristic, the IR drop across the field circuit increases more rapidly than the generated voltage, and it will be obvious, therefore, that the latter cannot exceed a value corresponding to the point B. If, on the other hand, the voltage tends to fall below the point B, say to the point D, then the voltage

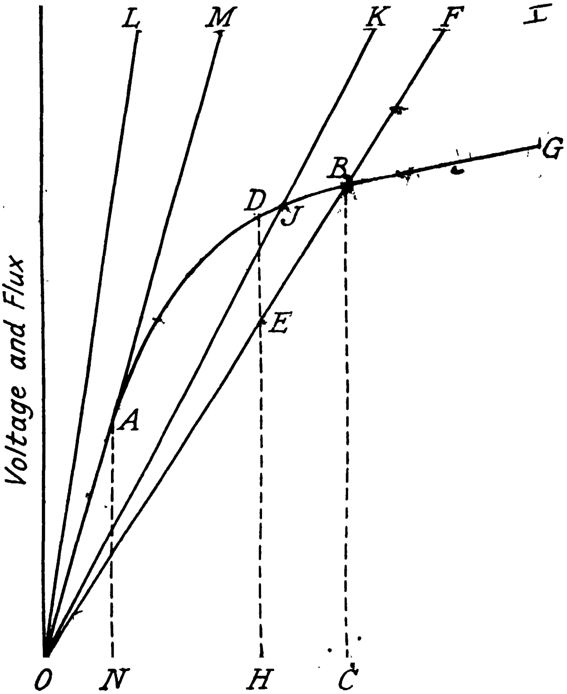

FIG. 13.

HD clearly exceeds the IR drop, which is now represented by HE, so that the field current must increase, thus increasing the generated voltage until the point B is reached, when the generated voltage equates to the IR drop. The line OEBF is termed the "field resistance line" and corresponds to a definite and fixed value of field resistance associated with a generated voltage BC.

If the field resistance be changed, then a corresponding change in the slope of the field resistance line will result and the operating point of the generator will be represented by a point such as J, the field resistance line now being OJK. If the resistance of the field circuit be increased so that the field resistance line is represented by OL, it will be evident that the generated voltage will fall to zero, since at all points on the B-H characteristic the IR drop in the field circuit will be greater than the generated voltage. The stability point in this case clearly coincides with the origin O of the curves.

Imagine now the field resistance to be adjusted so that the field resistance line becomes OAM. In this case, the generator voltage may settle down to a value AN. Since, however, the B-H characteristic and the field resistance line are coincident between O and A, the voltage may be represented by any point between these limits, and it will be obvious that the voltage may "creep" up or down OA. On this portion of the B-H curve, the generator voltage is evidently unstable. The line OAM is termed the "airgap line," since within the limits O and A, the permeability of the iron is assumed to be so high that the field current is practically that required to magnetize the airgaps of the generator. If, now, the field resistance be ever so slightly increased, the angle COM will increase and the machine voltage will vanish.

In the case of an actual generator, however, there will be a residual flux which will give, for zero ampere-turns, about 3 per cent of the rated voltage, and the effect of this will be to move the origin point O to the point P and it will be seen from Fig. 14 that the airgap line PAM no longer coincides with the field resistance line OAQ. If the field resistance is adjusted so that the exciter voltage is AN, it would appear that the latter would be stable at this point; but due to the fact that the angle PAO is very small, the intersection of the field resistance line with the B-H curve does not take place at a definite point as shewn in the diagram, but the two lines coincide over a considerable range, thereby causing the exciter to be unstable over this range.

It will be evident from Fig. 14 that if the angle PAO can be increased, a corresponding increase in inherent stability will result. The most general method of obtaining this result is

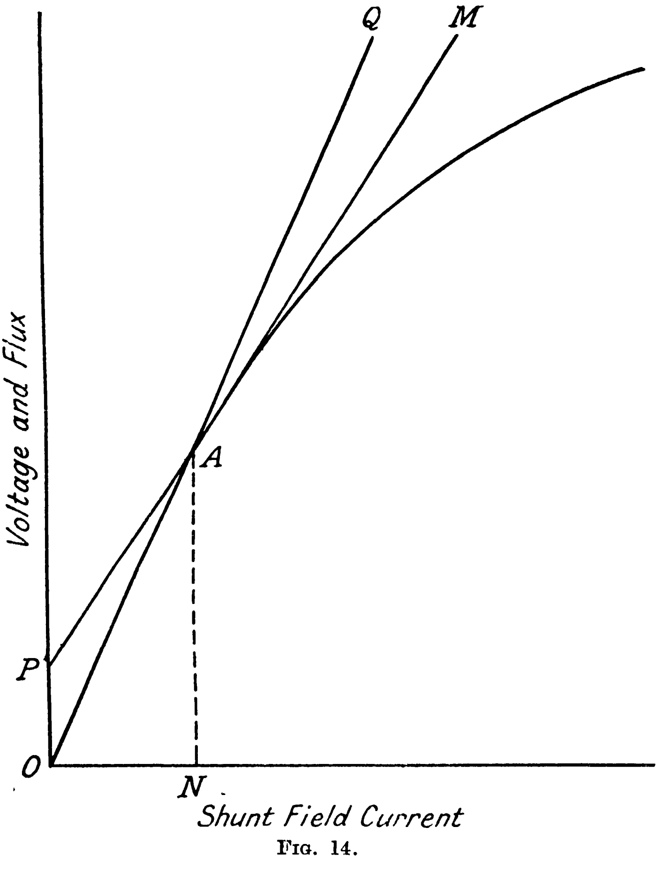

FIG. 14.

to change the B-H curve so that saturation of the iron begins at a relatively low voltage, as this will increase the angle between the B-H curve and the field resistance line. A disadvantage of this proposal is that any method of producing initial saturation must necessarily limit the maximum voltage and therefore the exciter output. Also a saturated magnetic circuit means the accumulation of a large amount of stored energy in the field which decreases the responsiveness of an automatic voltage regulator when changes of the generator voltage occur. The field energy is given by $\int_0^\phi \mathrm{IT}\, d\phi$, and this will be greatly increased if IT attains a large value for a given flux, due to magnetic saturation.*

Load Instability.—Exciter load instability may occur if the reactive kVA on the A.C. generator be suddenly increased. A particular and limiting condition occurs when the A.C. generator is short-circuited at a time when the load on the machine is small. Suppose the generator is designed to give its rated kVA at a lagging power factor of 0·8. When the generator is operating under these conditions, the exciter armature must supply to the A.C. generator field circuit sufficient current to magnetize the airgap of the generator and so maintain the terminal voltage of this machine at its correct value. If the generator power factor was unity, then the required generator field current would be reduced, since the demagnetizing component of the generator load current would be absent. It will be evident, therefore, that when the generator is operating under the conditions for which it was designed, the exciter armature will be carrying its maximum load, so that the kW capacity of the exciter must be increased if the power factor (lagging) is reduced.

Now imagine the generator to be lightly loaded at a higher power factor than that for which it is designed. Under these conditions the required generator field m.m.f. will be greatly reduced, a condition which will be accompanied by a reduction in exciter voltage, since exciter voltage and exciter armature current increase and decrease simultaneously, and in con-

---

* When the current in the circuit is I, suppose the flux is ϕ. If the current increases to $\mathrm{I} + \delta\mathrm{I}$ in a time δt, and the flux increases to $\phi + \delta\phi$, the e.m.f. generated $= \mathrm{T}\frac{\delta\phi}{dt}$ and the work done

$$= \mathrm{IT}\frac{\delta\phi}{\delta t}\,\delta t = \mathrm{IT}\,\delta\phi.$$

Hence the energy $= \int_0^\phi \mathrm{IT}\, d\phi$. This cannot be expressed more simply since ϕ is not a linear function of I.

sequence the airgap flux of this latter machine will be light. If, now, a short-circuit occurs on the system to which the generator is connected, near the terminals of the machine, the stator current will rise to its short-circuit value and as the stator resistance will be very small compared with the reactance, the short-circuit current will lag by approximately 90 degrees behind the generator voltage. Since a lagging reactive current demagnetizes the airgap of an A.C. generator, it will be evident that the flux must now collapse. However, the application of Lenz's law to this case, which states that in all cases of electromagnetic induction the direction of the induced e.m.f. must oppose the cause producing it, will shew

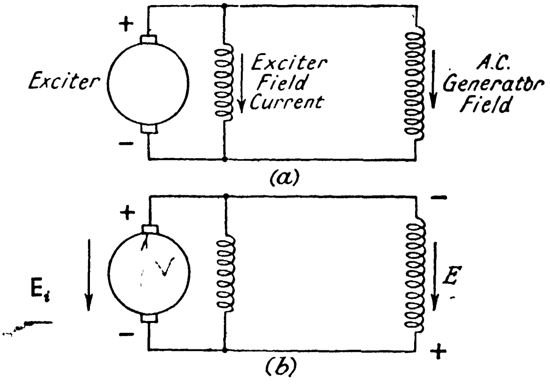

FIG. 15.

that the collapse of the generator field flux generates a considerable e.m.f. in the field circuit which acts in the same direction as the field current, and the latter may now rise to a value of four or five times its rated value. This current must, of course, circulate in the exciter armature winding, and since this winding is highly inductive, the rate of change of current causes an inductive e.m.f. to be generated therein, which will, in accordance with Lenz's law, act in opposition to the normal exciter voltage. Under this condition the inductive e.m.f. may be greater than the exciter generated voltage and it will be obvious that a reversal of exciter polarity may take place.

If the time of the transient is long enough, the exciter field current will reverse, when at the end of the transient, the exciter will build up with reversed polarity. A reference to Fig. 15 will make this clear; (*a*) shews the normal operating condition, and (*b*) the condition when the generator field flux is decreasing. The e.m.f. induced in the generator field circuit is represented by E, while E_i shews the direction of the inductive e.m.f. in the exciter armature.

The condition under which exciter reversal may occur is evidently that the duration of the generator field transient shall be greater than that of the exciter. In other words, the polarity of the exciter cannot be reversed unless the polarity of the armature remains reversed long enough for the shunt field current to reverse the polarity of the pole magnet flux. Stability is, therefore, ~~the prize~~ awarded for the result of a race between these two transients. If the generator attains ~~its normal operating conditions~~ before the exciter armature voltage has time to reverse, the latter machine will then build up its voltage in the normal direction and no reversal of polarity will take place.

Methods of Stabilizing Exciter Voltage.—Various palliatives have been suggested for exciter load instability; a reference to Fig. 15(*b*) will make it evident that a few compounding turns on the pole magnets of the exciter will have the effect of minimizing the voltage drop in the armature winding, but the disadvantage of this method lies in the fact that when the series ampere-turns are suddenly increased, the shunt ampere-turns must momentarily suffer a corresponding decrease due to the inertia of the magnetic system. This will be obvious from a consideration of Lenz's electromagnetic law. Consequently the resultant ampere-turns are not immediately affected. Since load instability is due to the inductance of the exciter armature winding, a compensating winding fitted in the main poles of the exciter, the turns thereof being connected in series with the armature, would provide a complete cure. The ampere-turns of the compensating winding oppose those of the armature winding and the inductance of the latter is thus suppressed.

Since the rate of change of current in an inductive circuit is increased if its resistance is increased, an increase in the resistance of the A.C. generator field winding will achieve a large increase in stability because the duration of the generator transient will be decreased. On the other hand, the duration of the exciter transient will be increased because the exciter will necessarily be operated at a higher voltage, thus requiring under these conditions a *lower resistance* in its field circuit. The ratio of the times of these two transients is therefore doubly increased by this expedient.

Probably the most satisfactory method of dealing with exciter instability is to arrange for the separate excitation of the exciter field. In this event, it will be obvious that reversal of exciter polarity cannot occur, while the method also affords a complete cure for inherent instability, since for any given resistance in its field circuit, the exciter voltage has a definite value. A convenient arrangement for this purpose is the provision of a small service exciter which operates at constant voltage and supplies the field current of the main exciter. This scheme is being increasingly adopted in the case of large turbo-generators.

An obvious alternative would be to operate the main exciter at constant voltage with its field iron saturated, and to vary the generator field current by means of a rheostat located between the exciter armature and the generator field. The disadvantages of this proposal are the large size of the rheostat and the heavy losses therein, and also its unsuitability for automatic control. This method is now obsolete.

An increase in stability may be obtained by the employment of an automatic voltage regulator working in the exciter field circuit. When the terminal voltage of the A.C. generator decreases, the action of the automatic voltage regulator is immediately to decrease the resistance of the exciter field circuit, thus increasing its time constant and the duration of the exciter transient. It will thus be evident that reversal of exciter polarity is less likely to occur, while a reference to Fig. 14 will shew that the effect of decreasing the exciter field resistance is to decrease the slope of the field resistance line, thereby increasing the angle PAO and avoiding the occurrence of inherent instability.

Exciter Systems.—Modern practice favours an independent exciter mounted on the shaft of the main turbo-generator, although there is a strong case for a lower-speed, separately-driven exciter set for each main generator notwithstanding the necessity for an additional driving motor. In some cases a change-over switch, which allows the A.C. generator field circuit to be connected to common excitation busbars, is provided, the latter being energized from a standby exciter.

It is doubtful, however, whether the provision of an alternative system of excitation can be justified; the exciter constitutes an integral part of the turbo-generator, and since it is as reliable as any other part, there is evidently no more justification for duplication than in the case of any other part, and this practice is being discontinued.

Automatic Voltage Regulators.—For reasons of reliability and economy, modern A.C. generators are designed with high values of reactance and consequently the voltage regulation of such machines is inherently poor. For this reason, automatic voltage regulation is necessary, particularly in the case of rapidly fluctuating loads. The types of regulators usually employed are the vibrating type and the direct acting type. A rheostatic type, which consists of a field rheostat connected in the exciter field circuit and operated by means of a motor, is sometimes used in connexion with base load generators where changes of load are infrequent and of a minor character.

The Vibrating-type Regulator.—The operating principles of this type of regulator are applicable to both D.C. and A.C. generators and will be understood from a study of Fig. 16,

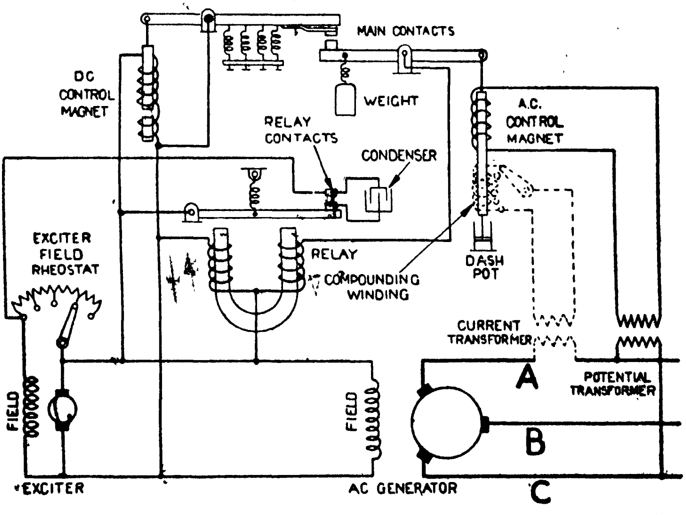

[B. T.-H.

FIG. 16.

which gives a schematic diagram of connexions of a "Tirrill" type regulator. The A.C. control magnet is excited from the generator terminals through a potential transformer and is designed and adjusted so that, for a constant voltage, the pull is independent of the position of the core in the winding. In order to keep the voltage constant, the force balancing the pull must evidently be constant. The weight of the core, less the weight of the adjustable counterpoise, is utilized for the provision of this force, the counterpoise being provided merely for the purpose of final adjustment. The movement of the A.C. control magnet is damped by means of the dashpot. Imagine the terminal voltage of the generator to be decreased consequent upon an increase of load. Due to the resulting decrease in the ampere-turns of the A.C. control magnet, the equilibrium is now destroyed and the main control lever therefore rotates in a clockwise direction, thus closing the main contacts. It will be seen that the relay is equipped with two identical windings, both of which are connected across the exciter armature, the left-hand one permanently, while the circuit of the other can be broken by the main contacts. When the latter are closed, the flux in the relay magnet is destroyed since the two windings are differentially related, and the relay contacts close instantly due to the pull of the springs, thus short-circuiting the exciter field rheostat.

Since the time constant of the field winding is designed to be as low as possible (due regard being paid, of course, to other competing design requirements), the exciter field current and terminal voltage both rise very rapidly.

The D.C. control magnet consists of a fixed, but adjustable, core at the bottom and a movable core at the top, the latter being attached to the D.C. control lever. The D.C. magnet winding is connected across the exciter armature so that the ampere-turns thereof are increased due to the rise of the exciter terminal voltage. When the magnetic pull is strong enough to overcome the opposing force due to the springs, the main contacts part, thereby re-establishing the relay flux and opening the relay contacts, thus re-inserting resistance in series with the exciter field winding.

It must be borne in mind that both the main contacts move in an upward direction until equilibrium is re-established on the A.C. control lever, after which the D.C. control lever continues to move upwards until the main contacts part, when the movement of the A.C. control lever is checked by the damping action of the dashpot; the lower contact can then be regarded as " locked " until the lever equilibrium is again disturbed by a further change in the A.C. generator voltage.

The A.C. control lever, therefore, only moves when a change of the generator voltage occurs. When the voltage falls, the lever rotates in a clockwise direction, and when the voltage rises, the lever rotation is counterclockwise. Thus for every condition of the load current, i.e., magnitude and power factor, there is a corresponding position for the A.C. control lever. For example, suppose the generator carries its full load current at 0·7 power factor lagging, and in order that the terminal voltage shall be at its normal value it is necessary that the entire resistance in the exciter field shall be cut out. Under this condition the A.C. control lever would rotate clockwise round an arc until it reached its limiting position, so that the lower main contact is at its highest point. When the A.C. control lever is in this position, the D.C. control lever, while still endeavouring to vibrate, is restrained from so doing and will therefore be unable to break the main contacts. Thus the exciter field rheostat will remain short-circuited, this being the necessary condition to maintain the generator terminal voltage at its rated value. The value of the generator field ampere-turns is now, of course, a maximum. Imagine, now, the generator load current slightly to decrease, or alternatively, the generator power factor slightly to rise. In order that the terminal voltage shall remain constant, the generator field ampere-turns must evidently decrease and, of course, this necessitates a decrease in the exciter field current which will, in turn, necessitate an increase in the exciter field resistance. Under this condition, the A.C. control lever will move from the extreme position above referred to and the lower main contact will fall until it just separates from the upper main contact. The D.C. control lever, now being released, will commence to vibrate, but owing to the lower main contact still being *near* its highest position, it will only part from the upper main contact for a minimum time, thus it will be evident from what follows that the effective resistance in series with the exciter field circuit will be low. The effective resistance will be determined from the ratio of the time during which the contacts are closed to the time taken for a complete cycle of vibration, i.e., the " contact ratio "

$$= \frac{\text{time the contacts are closed}}{\text{total time taken for contacts to open and close}}.$$

Since under the above conditions this ratio will be high, the effective resistance will be low. If the generator load conditions necessitated exactly half the exciter field resistance in circuit to maintain the rated generator voltage, then the A.C. control lever would move to such a position that the main contacts would be together half the time and open half the time, thus the above ratio and the mean value of the exciter field resistance would be half. If the generator load is continuously decreased, thus necessitating a continuous increase in exciter field resistance, the lower contact of the A.C. control lever will gradually sink until finally, when the minimum field current is required, this contact will be out of reach of the upper vibrating contact.

The A.C. control lever is, at normal generator terminal voltage, in equilibrium at any position since, for a given voltage, the electromagnetic pull is constant and this is balanced by a mass which is, of course, also constant. The function of this lever is, therefore, to control the contact ratio and, through this, the effective exciter field resistance, while the function of the D.C. control lever is to beat, thus open-circuiting the exciter field rheostat for the periods dictated by the position of the A.C. lever.

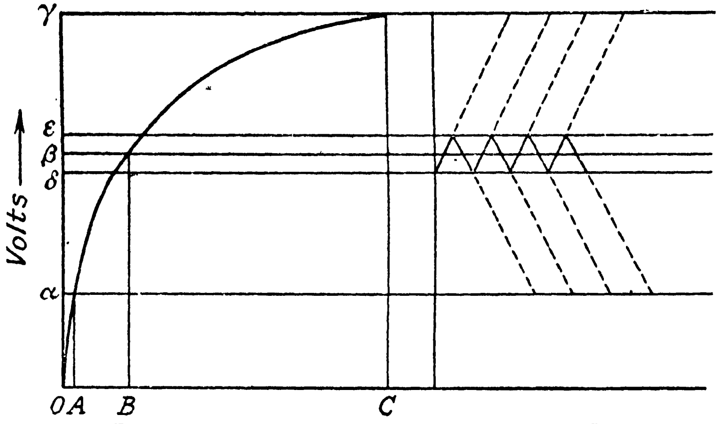

FIG. 17.

While the A.C. generator voltage remains constant, the D.C. control lever and relay lever both vibrate rapidly, the A.C.

control lever, as previously stated, only moving when a change in the A.C. generator voltage occurs. Referring to Fig. 17, the curve represents the magnetization characteristic of the exciter, and OB and $O\beta$, the exciter field current and terminal voltage corresponding to the normal A.C. generator voltage. Let $O\alpha$ and $O\gamma$ represent the exciter terminal voltage when the field resistance is in circuit and short-circuited respectively, the corresponding field ampere-turns being OA and OC. If, now, the exciter terminal voltage falls to $O\delta$, which is taken to be the value that allows the spring force to overcome the D.C. control magnet pull and thus close the main contacts, the exciter terminal voltage will tend to rise to $O\gamma$, but while this takes an appreciable time, as shewn on the right-hand side of Fig. 17, the voltage rises to $O\varepsilon$ almost instantaneously, and this is taken as the value necessary to open the main contacts, whereon the voltage now tends to fall to $O\alpha$. When, however, it again reaches the value $O\delta$, the main contacts open again and the cycle is repeated, the periodic time being a fraction of a second.

It will be seen from Fig. 16 that a condenser is connected across the relay contacts to prevent arcing.

Multiple Relays.—In the case of exciters having large outputs and large ranges of voltage variation, the voltage across the field rheostat is too large to be dealt with by a single shunting relay as shown in Fig. 16, and consequently a number of relays are employed, each relay being connected across a section of the field rheostat as shewn in Fig. 18. The operation of the relays is the same as has previously been described, but it will be evident that each relay deals with $1/n$th of the total power where n is the number of relays. The duty on the relay contacts can be materially reduced by arranging for them to work in "cataract" instead of in unison. By this arrangement, one or two relays only are allowed to operate at light loads, the remaining relay contacts being open and stationary. As the load increases, more relays are brought into operation, until at maximum load the relays which were in operation at light load remain permanently closed, while those which were inoperative at light load now vibrate. Thus at heavy loads the major portion of the field rheostat is short-circuited by the inoperative relays, while at light loads a portion of the exciter field rheostat is permanently left in circuit with the field winding. For instance, referring to Fig. 18, relays 1 and 2 could be arranged to vibrate at light load, the remainder being permanently open, while at full load relays 1 to 6 could be arranged to remain permanently closed, relays 7 and 8 vibrating under this condition. Thus only a sufficient number of relays are in operation under any given load condition to ensure the necessary variation of the exciter voltage about its mean position. This cataract operation of relays is achieved by the spring controls of the successive relays being adjusted to different strengths.

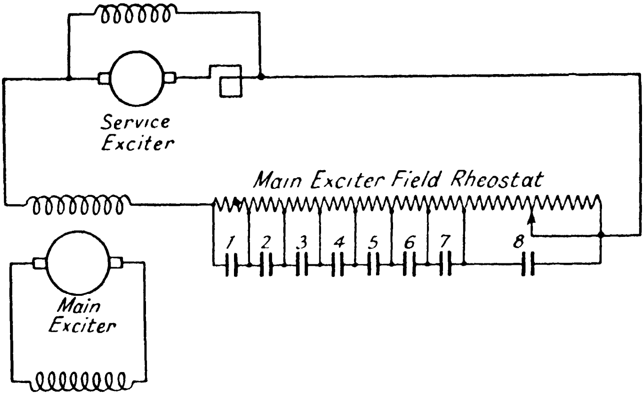

FIG. 18.

Compensation for Line Voltage Drop.—It is sometimes desirable to maintain a constant voltage at a point distant from the generator, and for this purpose the regulator must be compounded so as to compensate for the line voltage drop. For the values of load power factor met with in practice, the method of compensation shewn by the dotted connexions in Fig. 16 will be adequate. It will be seen therefrom that the A.C. control magnet is excited by a series compounding winding which is tapped in order that the amount of compensation may be varied. This winding is excited from the secondary of a current transformer, the primary of which is connected in series with one of the lines to which the potential transformer is connected. The ampere-turns of the compounding coil set up a flux which opposes the flux due to the ampere-turns of the winding energized from the secondary of the potential transformer. It will be evident that, as the line current increases and consequently the line voltage drop increases, the A.C. control magnet flux decreases due to the action of the compounding coil so that the A.C. control arm will rotate in a clockwise direction until the main contacts close, thus causing an increase in voltage, when the regulator action will be as previously described.

In Fig. 16 the potential transformer is shewn supplied from lines A and C, while the current transformer is inserted in line A. Referring to Fig. 19, the phase voltages of the A.C. generator are represented by the vectors OA, OB and OC, so that the voltage applied to the A.C. control magnet winding is OE. The current in the series compounding winding must, at unity power factor, be represented by I_a, in phase opposition to OA, since this current is required to provide ampere-turns in opposition to those for which the potential winding is

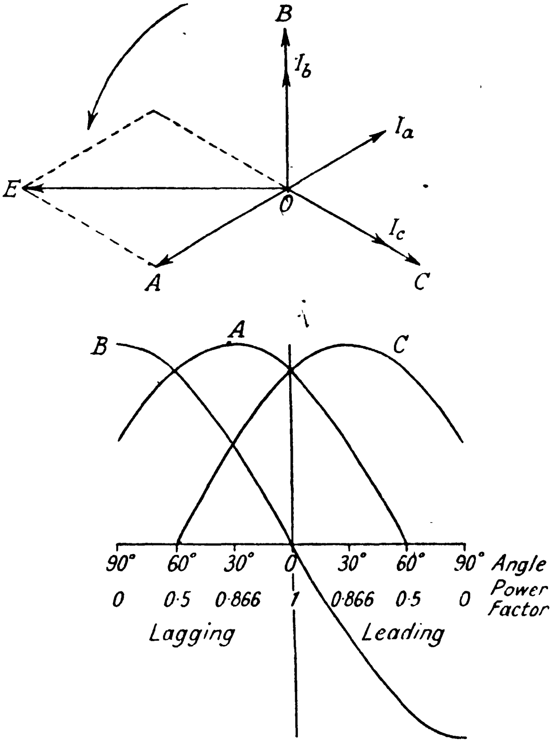

FIG. 19.

responsible. If, now, the load current, and therefore the current I_a, is assumed to be constant, the effectiveness of the compounding at different load power factors may readily be investigated. It will be evident that at unity power factor the component of I_a which is in opposition to OE will have a value of $I_a \cos 30$ degrees $= 0{\cdot}866\, I_a$, while if the load current lags by 30 degrees, the effectiveness of I_a in increasing the terminal voltage of the generator will be a maximum. The effectiveness of I_a at different power factors is illustrated in the curve A, and this is, of course, a sine function. It will be obvious that when the current transformer is inserted in line A, the compounding effect of the current I_a will be high at all power factors between 0·5 lagging and unity, but the effectiveness is a maximum at one power factor only.

If, now, the current transformer is inserted in line C, a corresponding investigation will shew, as indicated in curve C, that the compounding effect of the current I_c will be high at all power factors between unity and 0·5 leading, the effectiveness being a maximum at a power factor of 0·866 leading. This power factor range is not, of course, generally met with in practice. Finally, Fig. 19 shews that if the current transformer is inserted in line B, the effectiveness of the compounding current will be a maximum when the load current lags by 90 degrees, while with a leading power factor the current I_b will act to decrease the terminal voltage of the generator. This connexion might possibly be employed when the generator normally supplies a load at a low lagging power factor through a network having considerable capacitance. A reference to Fig. 5 will shew that at unity power factor very little compounding may be needed, but as the lagging power factor is increased the compounding must be progressively increased. Under conditions of light load, the capacitive current may be large and the power factor may consequently be leading. The negative compounding obtainable with this connexion will serve to limit the voltage on the network. In the majority of cases met with in practice, however, the most effective position of the compounding current transformer will be in line A.

Numerous schemes have been devised for the purpose of exactly compensating for the line impedance drop at different power factors and loads and thereby maintaining a constant voltage at the receiving end of the line. The object of all such methods is to inject into the regulating circuit, which is located at the sending end of the line, a voltage which is identical in magnitude and phase to the line impedance voltage at any value of the load and power factor. The resultant of the sending end voltage and the line impedance voltage, which is, of course, identical with the receiving end voltage, is applied to the automatic voltage regulator. The voltage element of the regulator works, therefore, as if it were supplied with this voltage. A scheme employed for this purpose is shewn in Fig. 20, where R and X represent a resistor and a reactor respectively. These are connected in series and are fed from the secondaries of the cross-connected current transformers. The circuit R and X, therefore, carries a current which is an exact sample of the load current. Both R and X are made variable by means of tappings, and if in the circuit containing the A.C. control magnet winding (see Fig. 16), such proportions of R and X are inserted that the ratio X/R of this circuit

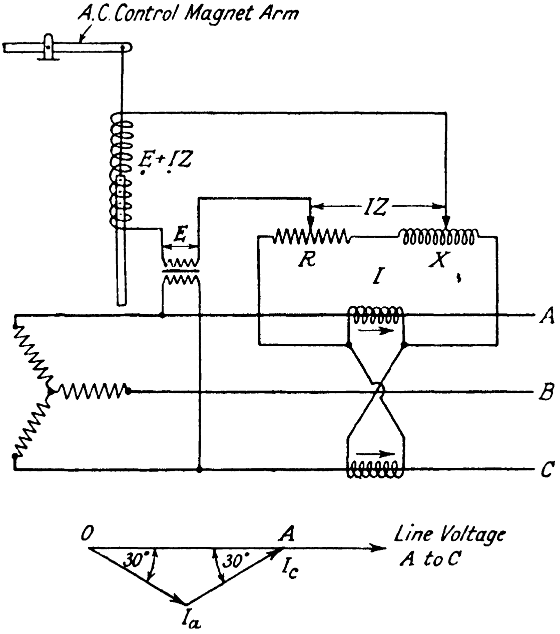

FIG. 20.

is equal to the ratio X/R of the line, it will be evident that the line impedance voltage can be reproduced in this circuit in miniature. The resultant voltage applied to the A.C. control magnet winding will be a facsimile of the receiving end voltage in miniature and the regulator will operate as previously described to keep this voltage constant.

If one current transformer only, inserted in line A, was employed, there would be an inherent phase angle between the line voltage and the line current, as shewn in the vector diagram of Fig. 19. This angle may be cancelled, as shewn in Fig. 20, by inserting a further current transformer in line C and cross-connecting their secondaries so that the current passing through R and X will be OA, the resultant of I_a and I_c. It will be evident that this resultant is in phase with the line voltage at unity power factor and consequently there will be no inherent phase angle error at any other power factor. The two current transformers are wound to give secondary currents of 2·89 amperes at full-load so that the resultant OA is 5 amperes.

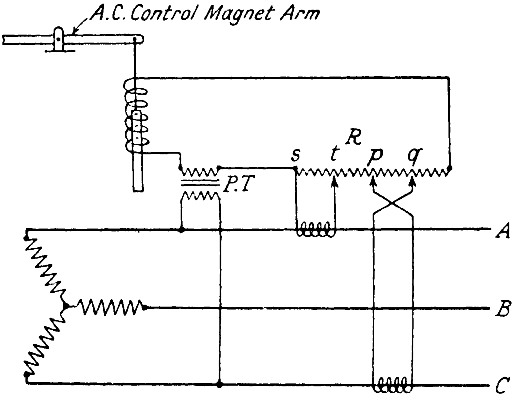

FIG. 21.

Instead of using the resistance and reactance in series, as above described, the two current transformers in phases A and C can be arranged independently to circulate their outputs through selected portions of a non-inductive resistance. This scheme is shewn in Fig. 21, in which R is the non-inductive resistance inserted directly in the A.C. control magnet winding circuit. Current transformer C circulates its secondary current in the portion *pq* of the resistance and the voltage drop therein will, at a given load, be proportional to the value of the resistance between these two points. Similarly the voltage drop in the portion *st* due to the secondary current of current transformer A can be varied by moving the slider *t*. The action of the compensator will be understood from a reference to the vector diagrams given in Fig. 22. Imagine, first, that the line contains resistance only, then the voltage drop in the line will be in phase with the line current. Referring to diagram (*a*), OE represents the voltage applied to the A.C. control coil due to the potential transformer PT, and this voltage is, of course, a replica of the sending end voltage. If the power factor of the load is assumed to be unity, then OA and OC will represent respectively the voltage drops in the portions *st* and *pq* of the non-inductive resistance. The resultant voltage drop in the resistance due to the load current is OD, and if the tappings *pq* and *st* are correctly chosen, this will be a facsimile of the line voltage drop. Since OE is proportional to the sending end voltage and OD is proportional to the line voltage drop, the resultant, OF, will be proportional to the receiving end voltage and the regulator will be set to maintain this voltage at a constant value.

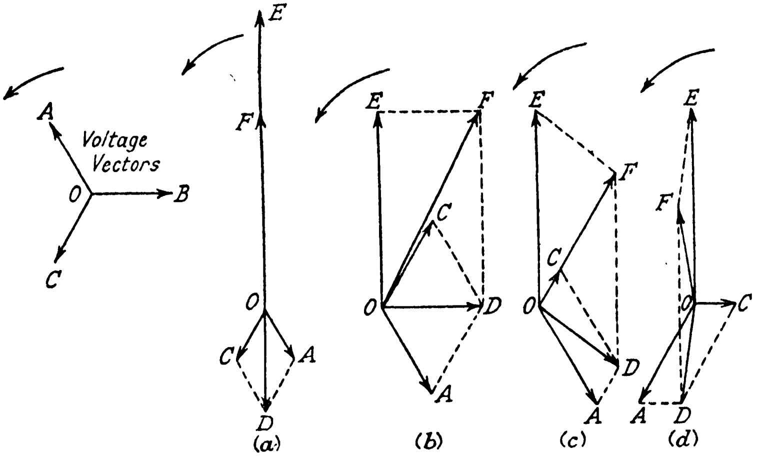

FIG. 22.

Suppose, now, that the line contains reactance only, then the line voltage drop will always be in quadrature with the line current. If the tappings *pq* are interchanged, the voltage drop in this portion of the non-inductive resistance due to current transformer C will be reversed. The vector diagram referring to this case is given in Fig. 22(*b*) and it will be seen therefrom that the resultant voltage drop in the resistance R due to both currents is represented by OD if the power factor of the load is again assumed to be unity. It will be evident from a comparison between diagrams (*a*) and (*b*) that the vector OD has been rotated through 90 degrees, so that in this case also the line voltage drop is added to the sending end voltage correctly having regard to phase angle.

Finally, suppose the line contains both resistance and reactance, which condition represents the case generally met with in practice, then the line voltage drop will be displaced with respect to the line current by an angle whose tangent is the ratio of the reactance to the resistance of the line. Assuming the load power factor to be unity, it will be seen from Fig. 22(*c*) that the resultant OD can be changed in phase by the required angle by decreasing OC, that is, by making the resistance between *pq* smaller and by making OA correspondingly larger by moving the tapping *t* to the right. Fig. 22(*d*) shews Fig. 22(*c*) reproduced, but the vectors OA and OC, and therefore OD, have been rotated in a clockwise direction through an angle of 60 degrees so that the diagram represents the condition of the line carrying a current lagging behind the voltage, the power factor being 0·5. It is thus evident that by altering the tappings on the non-inductive resistance appropriately, the line voltage drop can be accurately reproduced under all conditions of line constants and load power factors. In all cases, the vector OF is proportional to the receiving end voltage, and this is maintained constant by the action of the automatic voltage regulator.

CHAPTER III

FURTHER TYPES OF AUTOMATIC REGULATORS

Parallel Operation of Automatic Voltage Regulators.—While a single regulator may be employed to control the voltage of a number of generators operating in parallel, such a proposal is unsatisfactory because the control is not completely automatic; as has been previously shewn (see Chapter I), A.C. generators giving the same terminal voltages may at the same time operate at widely different power factors. Since the power factors of the machines would obviously have to be controlled by independently adjusting the field rheostats, the advantage of automatic regulation would to some extent be lost. If, however, each generator is equipped with an independent automatic voltage regulator, stable operation of the regulators in parallel requires that the latter should be influenced by the power factors of their respective generators. Referring to the dotted connexions in Fig. 16, imagine the current transformer to be connected in the line which is *not* utilized to excite the primary winding of the potential transformer. The relevant connexions are extracted from Fig. 16 and given in Fig. 23, from which it will be seen that the current transformer is connected in line 2, while the potential transformer is excited from lines 1 and 3. Suppose, now, the generator is operating at a given load and at a power factor of 0·87 lagging; the automatic voltage regulator is set to control the generator voltage at its normal value under this condition. Referring now to the vector diagram, the phase voltages of the generator are OE_1, OE_2, and OE_3 respectively, and consequently the voltage applied to the winding VC is OE. The current in the secondary winding of the current transformer is OI_1, lagging behind the phase voltage OE_2 by 30 degrees. This current is passed through the coil CC with its phase *reversed* with respect to OE, and is therefore represented by the vector OI_1' which has a component OA in phase with OE. Under this condition the regulator is assumed to be in equilibrium.

Imagine, now, the generator power factor to fall to a value below 0·87, the current now being OI_2, so that the current passing through the coil CC is represented by OI_2' and the component in phase with OE is now OB, an increase of AB. The increased ampere-turns corresponding to this current will rotate the A.C. control magnet arm in a counterclockwise sense, which will reduce the generator excitation in the manner previously described. If the generator is running in parallel with other machines, this reduction of excitation will result in a reduction of the reactive current supplied by this machine (see Fig. 7).

Similarly, an increase in the generator power factor will rotate I_1 in a counterclockwise direction and thus reduce the reactive current OA so that the ampere-turns of the coil CC will be insufficient to hold the A.C. control magnet in equilibrium. The arm will therefore rotate in a clockwise sense, thereby increasing the generator excitation and consequently increasing the reactive current until equilibrium results.

It is thus evident that the effect of the coil CC, when carrying a sample of current from line 2, is to reduce the excitation of an over-excited generator and to increase the excitation of an under-excited generator, with the result that a number of machines, if equipped with automatic voltage regulators provided with compensation, will operate in parallel with complete stability.

The usual method of operation is that known as the " master and trailer " method. Consider a number of A.C. generators operating in parallel, each being equipped with an automatic voltage regulator. One generator is controlled by a regulator which is responsive to voltage only, i.e., the secondary of the current transformer (Fig. 23) is short-circuited and the regulator coil CC is open-circuited. The function of this regulator, termed the " master," is to maintain constancy of voltage while the other regulators, termed the " trailers," are connected as shewn in Fig. 23 and therefore tend to keep the reactive currents of their respective machines constant as above described. It must be understood that this scheme does not operate to keep the generator power factors constant. This will be clear if the effect of increasing the generator current is considered. Suppose (see Fig. 23) the length of the vector I_1' be increased so that both AI_1' and OA are correspondingly increased. Due to the increase of OA the regulator will operate to reduce the generator field current and therefore the reactive current will be correspondingly reduced.

It will thus be evident that the trailer regulators tend under all conditions to keep the reactive currents approximately constant, and, in consequence, any increase of reactive kVA demanded by the busbar load must be supplied by the generator which is controlled by the master regulator. Hence this machine should preferably be the largest in service.

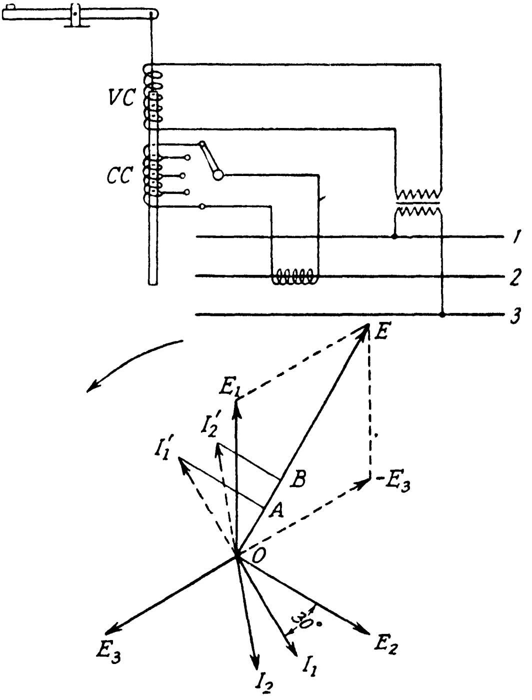

FIG. 23.

The objection that the generator controlled by the master regulator must supply all the excess reactive kVA can be overcome by utilizing samples of current obtained from two phases of the trailing machines instead of only one. The scheme employed is shewn in Fig. 24, in which the outputs from the current transformers in lines 2 and 3 are passed through current coils CC_2 and CC_3. Both these coils are equipped with tappings so that, corresponding to any given load, their ampere-turns can be varied. Referring now to

Fig. 25(*a*), which has been drawn for the load condition of unity power factor, OA represents the ampere-turns of the coil VC provided by the potential transformer, and AB and BC respectively, the ampere-turns of the coils CC_2 and CC_3, provided by the current transformers. The resultant ampere-turns are therefore represented by OC, and this resultant is maintained constant by the action of the regulator.

The vector AC represents the resultant ampere-turns provided by the current transformers at full-load, and AD, AE and AF, the ampere-turns provided at one-quarter, one-half and at three-quarters of full-load respectively. It will be evident that if the power factor of the generator is to remain constant when the magnitude of the load varies, the resultant ampere-turns applied to the regulator must always have the same value, and it is therefore obvious that the intercepts between the arc of radius OC and the line AC represent differences between ideal and actual values of ampere-turns obtained from the current transformers. If, however, relative values of OA, AB and BC are carefully selected, these differences can be made reasonably small.

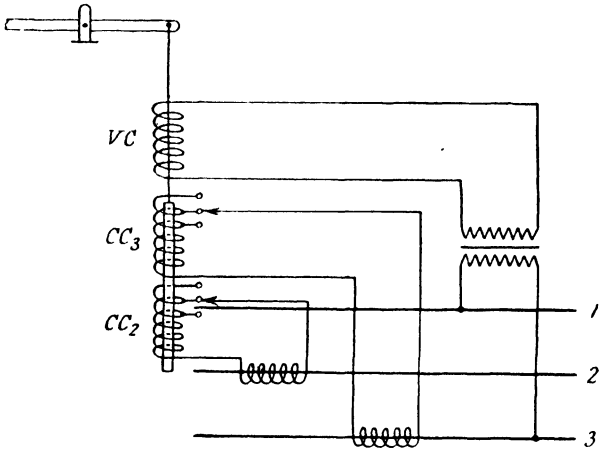

FIG. 24.

If, now, it is desired to maintain the generator power factor constant at a value other than unity, it is necessary to swing the vector AC through a certain angle without altering its length. This is achieved by decreasing the length of AB and correspondingly increasing the length of BC by means of the tappings on the regulator current coils CC_2 and CC_3 (Fig. 24). This condition is shewn in the vector diagram of Fig. 25(*b*) in which the resultant, AC′, is of the same length as AC in Fig. 25(*a*), so that the ampere-turns obtained from the current transformers again correspond to full-load of the generator. The resultant ampere-turns now applied to the regulator are represented by OC′ and these ampere-turns are, of course, insufficient to hold the A.C. control magnet arm in equilibrium.

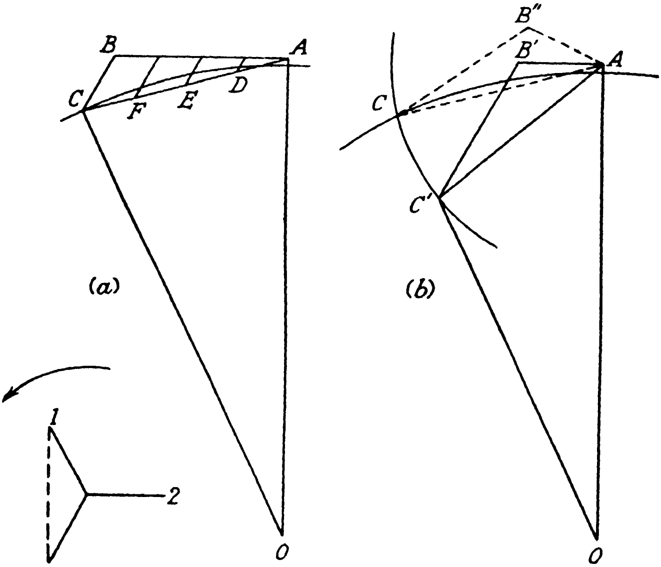

FIG. 25.

The latter will therefore rotate in a clockwise sense, thus increasing the generator excitation. As the generator excitation rises, the reactive current given by the generator will correspondingly increase and the action will continue until OC′ reaches its former value OC, when the regulator will remain in equilibrium for varying loads as before. This latter condition is represented by the triangle AB″C (Fig. 25*b*) and it will be evident that the generator power factor will now be maintained at its new value, $\cos \widehat{B''AB'}$, by the regulator the control system S. If the current transformer is connected in phase B and the generator is operating at (say) full load and unity power factor, the additional current in the appropriate portion of the resistor *u* will be represented by $-I_B$, in phase opposition, of course, to V_B. If, now, the current

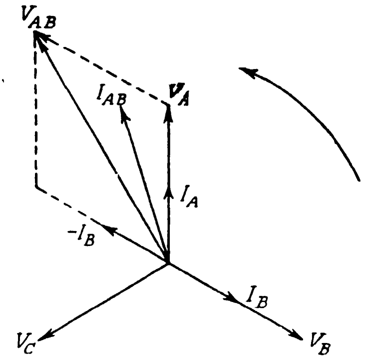

FIG. 29.

is constant but the power factor of the load is lagging, then the vector $-I_B$ will move in a clockwise direction. Since over a wide range of lagging power factors the cosine of the angle between I_{AB} and $-I_B$ will not differ greatly from unity, variations in the actual power factor will not greatly affect the current through (or the voltage applied to) the control system. On the other hand, a variation in the *magnitude* of the load current, and therefore in the magnitude of $-I_B$, will have a much greater effect upon the magnitude of the total current through the control system. Consequently, when the sample of current is taken from phase B for the purpose of compounding, the regulator will respond sensitively to changes in the magnitude of the current but it will, to a large extent, ignore changes in the power factor if the latter is lagging. It is for this reason that phase B is selected for the purpose of compounding the regulator. Curve B of Fig. 30 illustrates the manner in which the percentage voltage rise varies with power factor.

Suppose, now, the current transformer is connected in phase A and the generator operates at full load and unity power factor. The additional current in the appropriate portion of the resistor *u* will now be represented by I_A, in phase with V_A (see Fig. 29). If, again, the load current is assumed to be constant and the power factor lagging, then I_A will rotate in a clockwise direction and the voltage applied to the control system of the regulator will be greatly modified. It will therefore be evident in this case that the voltage applied to the regulator will, at lagging power factor, be greatly affected by a variation in the power factor and will also be affected to a lesser extent by the magnitude of the load current. The characteristic illustrating voltage change against power factor is given in curve A of Fig. 30. This characteristic is utilized for the purpose of stabilizing the operation of regulators working in parallel and will be referred to subsequently.

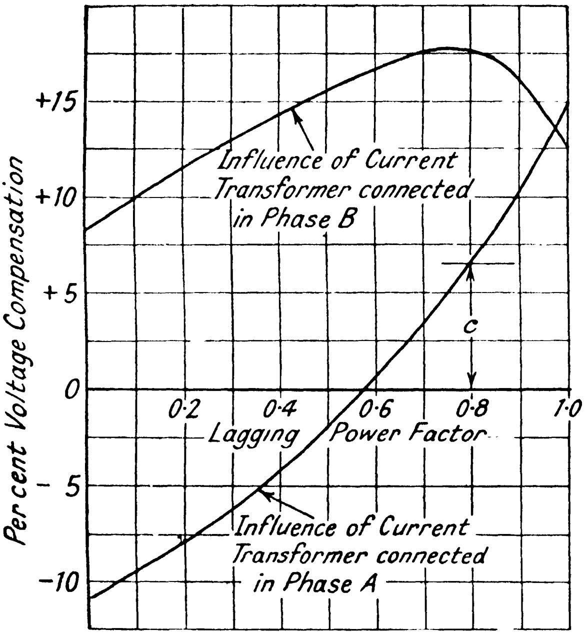

FIG. 30.

Parallel Operation of Brown-Boveri Regulators.—Stabilized parallel operation of Brown-Boveri voltage regulators is provided for in either of two ways according to conditions. If rigid voltage is the main consideration, the "polygon" method (described below) is used employing astatic regulators, arrangements being made so that the latter shall be influenced by any reactive circulating current flowing between machines in such a way as to correct their respective excitations until the circulating currents no longer exist. This, of course, implies the use of interconnected current transformers and so the sphere of application of the method is restricted to machines operating in the same station. The advantage of this scheme is that the voltage is entirely independent of the system power factor.

The second method, known as the "static" method, dispenses with the need for interconnected current transformers and is therefore of wider application, though the voltage resulting is not entirely independent of the power factor as in the case of the polygon method. Stable operation as between regulators is, however, achieved by either method.

Polygon Method.—The principle of the polygon method will be understood by means of Fig. 31, which gives a schematic diagram of connexions applied to the control of three generators working in parallel. The primary windings of the current transformers, X, Y and Z, are connected in corresponding phases of their respective generators (see Fig. 33). The secondary windings, *a*, *b* and *c*, of the current transformers are connected in series so that their currents can circulate around this closed path. The points *p*, *q* and *r* are connected to a central point O through selected portions of the resistors *u* (see Fig. 28). Imagine the currents in windings *a*, *b* and *c* to be identical in magnitude and in phase, the values of these being (say) 5 amperes. Under this condition, no currents will flow through the resistors *u*, the currents being constrained to flow round the path *arcqbp*. It will be evident that in these circumstances the points *p*, *q* and *r* must be equipotential and, of course, their symmetry will be upset directly the balance of currents is disturbed. Clearly a change in the magnitude of any one current may arise due to either a change in its active or reactive components or both, and when this occurs, equalizing currents will be established in the resistors *u*. Suppose, for instance, the current in *b* increases to 7 amperes (see Fig. 32), so that the excess 2 amperes spill through resistors *ub* and *uc*. If the power factor of this equalizing current is unity, an inspection of the vector diagram of Fig. 23 in conjunction with Fig. 33 will shew that it will have no effect on the regulators associated with generators Y and Z, while it will be evident that any appreciable portion of the equalizing current will be restrained from passing through the resistor *ua* by the high impedance of the winding *c*. On the other hand, if the equalizing current were reactive, its direction in resistor *ub* will decrease the voltage drop therein, while in *uc* its direction will have the opposite effect. Consequently, the excess of electromagnetic torque exerted on the automatic voltage regulator associated with generator Y will decrease the excitation of this machine and therefore the reactive current, while the increased voltage drop in *uc* will operate to decrease the electromagnetic torque available in the regulator of generator Z. The excess of spring torque will increase the excitation of this machine, which will, in consequence, pick up additional reactive current. If, now, machine Z is carrying more than its correct proportion of reactive current, equalizing currents will flow from *q* to O and the action will continue until finally the reactive kilovolt-ampere loadings of all the generators are equalized. It will thus be evident that the polygon method achieves complete stabilization under all conditions of loading. The regulators are insensitive to the circulation of active currents in the resistors *u*, but respond very sensitively to the circulating therein of reactive currents. It will thus be obvious that the kW loadings of the generators may be widely different, but the regulators will tend to keep the reactive kilovolt-amperes equal.

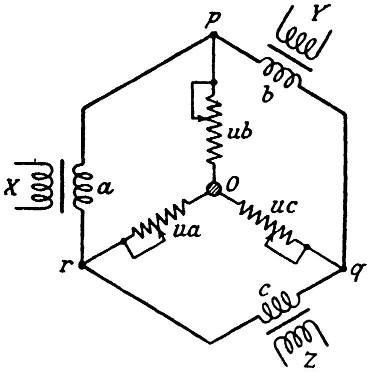

FIG. 31.

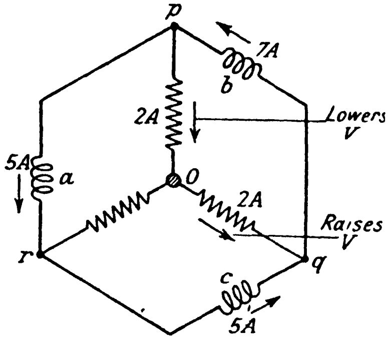

FIG. 32.

It will be seen from Fig. 33, which shews the complete diagram of connexions corresponding to Fig. 31, that an auxiliary switch, operated by the same mechanism as the main oil circuit-breaker, is provided for the purpose of automatically cutting into the circulating current path the secondary winding of the current transformer when the corresponding generator is paralleled, and short-circuiting it when the generator is disconnected from the busbars.

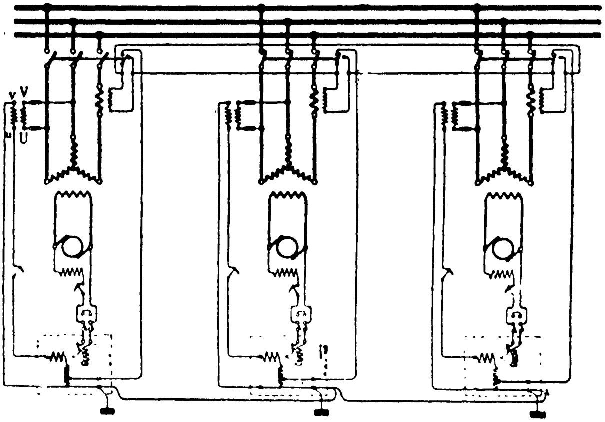

[*Brown-Boveri.*

FIG. 33.

Static Method.—This method involves departing from the * astatic characteristic of the moving system of the regulator previously referred to, and by correcting for the voltage drop thus introduced by the agency of a compensating current. It will be remembered that the moving system was rendered astatic by the combination of the main spring *f* together with the auxiliary spring *n* (see Fig. 26). By moving the top support of the spring *n* further down, the auxiliary spring effect can be rendered relatively small or entirely nullified, so that the regulator then has the characteristic of the main spring which, without the partnership of the auxiliary spring, exerts an excessive torque on the moving system when it is tightly wound. In other words, the regulator would operate but for the compensating current, so that as the generator load increased, its terminal voltage would fall slightly instead of remaining constant. The astatic control of the regulator has by this expedient been changed to *static* control. If, now, the com-

* It will be remembered that the regulator is astatic when the total spring torque is *independent* of the *position* of the moving system.

pensating current transformer is connected in phase A (see Figs. 28 and 29), it can be made to compensate for this falling characteristic.

It will be remembered that the degree of voltage compensation obtained is not only dependent upon the magnitude of the current, but is also very sensitively dependent upon the power factor of the load (see curve A, Fig. 30). Suppose, now, that two A.C. generators are connected in parallel and are fully loaded at 0·8 power factor lagging, i.e., both generators are supplying equal values of active and reactive current. If both generators are equipped with automatic voltage regulators and current transformer compensation as above described, each regulator will be compensated by the same amount, *c* (Fig. 30), this value being just sufficient to cancel the voltage drop due to the static droop of the regulator. While the power factor of the generators remains constant, the regulators will operate to maintain the terminal voltages constant as the *magnitude* of the load varies, since, for every value of the load, the current transformer will just compensate for the falling voltage-load characteristic due to the static voltage droop of the regulator.

Suppose, now, that while the total load current and load power factor remain constant, the excitation of one generator increases due to some cause. The power factor of this generator will now fall and the corresponding current obtained from the current transformer will now be *insufficient* fully to compensate for the static characteristic of the regulator (see Fig. 30), so that the torque will increase, causing the regulator to lower the excitation, and this generator will thus reject the increase of reactive current. The power factor of the second generator will, of course, rise to a value higher than 0·8, since the load power factor remains constant, and the current obtained from the current transformer will overcompensate for the static characteristic of the regulator. The terminal voltage of this generator will thus rise and the machine will accordingly tend to regain its fair share of the total reactive current. Thus it will be evident that the division of reactive load current will be stable and the regulators will operate to correct the power factors of the generators if they become dissimilar.

Control of Power Factor of Synchronous Motor by Brown-Boveri Regulator.—The arrangement of the power factor regulator for the control of a synchronous motor is essentially the same as that of the voltage regulator, the difference between the two being the internal modifications necessary for the application of the regulator to power factor control. One modification is the omission of the main spring *f* (Fig. 26), the entire torque exerted on the moving system being provided electromagnetically. The damping device and recall spring, referred to when describing the automatic voltage regulator, are retained in the power factor regulator in order to facilitate quick adjustment of the regulator when its equilibrium is disturbed, and also to prevent oscillations of the moving system. The other modification lies in the method of supplying energy to the control system. In the case of the voltage regulator, it will be remembered that the two windings *a* and *b* (Fig. 26), having different ratios of reactance to resistance, are connected in parallel across the generator terminals. In the case of the power factor regulator, the connexions are shewn in Fig. 34, from which it will be seen that the pressure winding *a* is connected in series with the resistance *u*, one end of this circuit being connected to the star point of the three-phase system and the other end to the sliding contact of a potentiometer resistance *p*, the ends of the latter being connected to two phases, B and C, of the system. The current winding *b* is shunted by an auxiliary resistance *r*, the function of this resistance being to adjust the current flowing

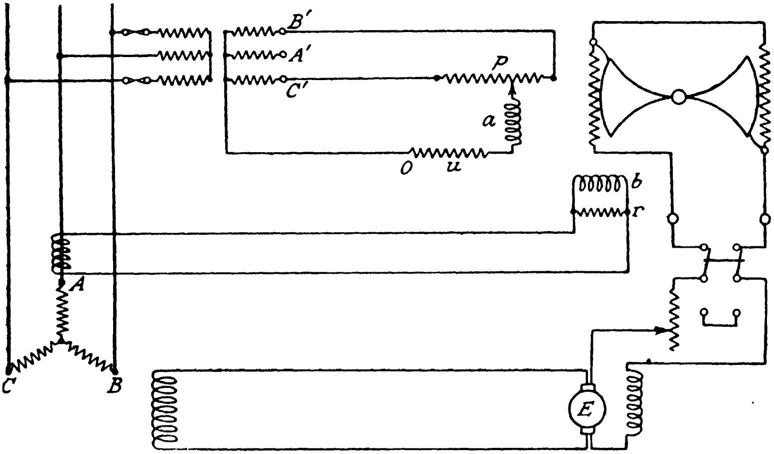

FIG. 34.

through the winding *b*. This circuit is supplied from the secondary winding of a current transformer, the primary of which is inserted in line A.

The operation of the regulator will be understood from a reference to Fig. 35. Imagine first the sliding contact *p* being placed in the middle of the potentiometer resistance so that the phase of the voltage applied to winding *a* may be represented by the direction O*p*. Assume the current through the winding *a* to be in phase with the voltage O*p*. If, now, the power factor at which the synchronous motor is operating be unity, then the current through winding *b* obtained from the secondary of the current transformer may be represented by OI. Under this condition there is clearly no phase displacement between the currents in windings *a* and *b* and, in consequence, no torque is exerted on the moving system. If, however, the current lags behind the voltage, then the current in winding *b* may be represented by OI′ and the lagging reactive component of this, II′, is in quadrature with the current in winding *a*. Under this condition a torque will be exerted on the moving system of the regulator which will turn the aluminium drum in a counter-clockwise direction, thus decreasing the resistance in the exciter field circuit and increasing its terminal voltage. Hence the field current of the synchronous motor will rise until the phase displacement disappears, when the torque exerted on the regulator moving system will fall to zero. On the other hand, if the power factor of the synchronous motor be leading, the leading reactive current II″ circulating in winding *b* (Fig. 35), will co-operate with the current in winding *a* to rotate the aluminium drum in a clockwise direction, thereby increasing the exciter field resistance and decreasing its terminal voltage so that the field current of the synchronous motor will be reduced until again the machine operates at unity power factor.

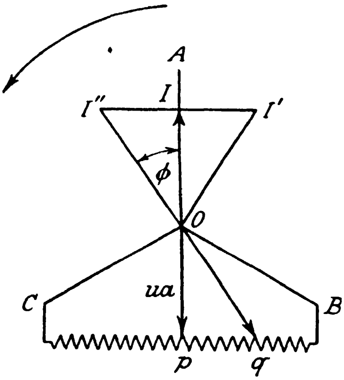

FIG. 35.

If, now, it is desired automatically to operate the synchronous motor at a power factor other than unity, the potentiometer sliding contact is moved from the point p in the resistance to another point such as q, when it will be obvious that, for the regulator to be in equilibrium, i.e., for the torque exerted on the aluminium drum to be zero, the current in winding b must have the phase angle ϕ with respect to the voltage OA. Consequently the synchronous motor will be constrained to operate at a power factor $\cos \phi$ leading, and it will be evident that by moving the potentiometer sliding contact (Fig. 35) along the resistance from C to B, the regulator can be set to maintain the power factor of the synchronous motor constant at any value between the limits of 0·5 lagging and 0·5 leading.

The power factor regulator thus maintains the machine power factor at a constant value and is absolutely independent of voltage variations. It is therefore to be differentiated from a voltage regulator made responsive to power factor variations, which maintains neither accurate voltage with varying power factor nor accurate power factor when the voltage varies. Such a regulator at the best merely represents a compromise.

The Metropolitan-Vickers Automatic Voltage Regulator.—The Metropolitan-Vickers regulator can most conveniently be described at this juncture since it combines some of the features of the Tirrill and Brown-Boveri regulators. The scheme is shewn in Fig. 36, in which A represents the A.C. generator and E the exciter. The regulator is essentially of the vibrating contact type, but, unlike the Tirrill, the vibrations are not self-maintained. Referring to the diagram, T represents a cam which is driven by means of a small induction motor supplied from the secondary winding of the potential transformer K. The rotation of the cam causes the contact W to vibrate with constant frequency and amplitude. The lower contact X is supported by a flat spring and this contact engages with the upper contact W, except when its upward movement is arrested by a stop on the main control arm Q. The control arm carries an iron core I, which is free to move inside the control coil, the latter being supplied, through the potential transformer K, from the terminals of the A.C. generator. Inside the control coil is also located a fixed iron core, V.

When the terminal voltage of the generator is normal, the ampere-turns of the control coil magnetize the irons V and I, and the attraction between them holds the control arm Q, which is supported on the left-hand side by means of a flat spring, in a position corresponding to this voltage. Under this condition the cam T causes the contacts W and X to make and break about eight times per second. The closing of the contacts allows the coil N to be energized from the exciter armature voltage and the consequent magnetization of the iron core therein attracts the iron armatures of the main regulator contacts M. By this mechanism, the exciter field rheostat is alternately put in series with the field circuit and short-circuited, so that the effective value of the resistance depends upon the "contact ratio" (see p. 40). Suppose, now, the load on the A.C. generator increases so that the terminal voltage falls. Under this condition, due to the ampere-turns of the control coil being insufficient to hold the regulator main control arm Q in equilibrium, the latter will sink, thus causing the contact X which, as above mentioned, is mounted on a flat spring, also to sink. The gap between contacts W and X will now be increased, resulting in the main regulator contacts M remaining closed for a longer time per contact cycle. Consequently the contact ratio will be increased, and

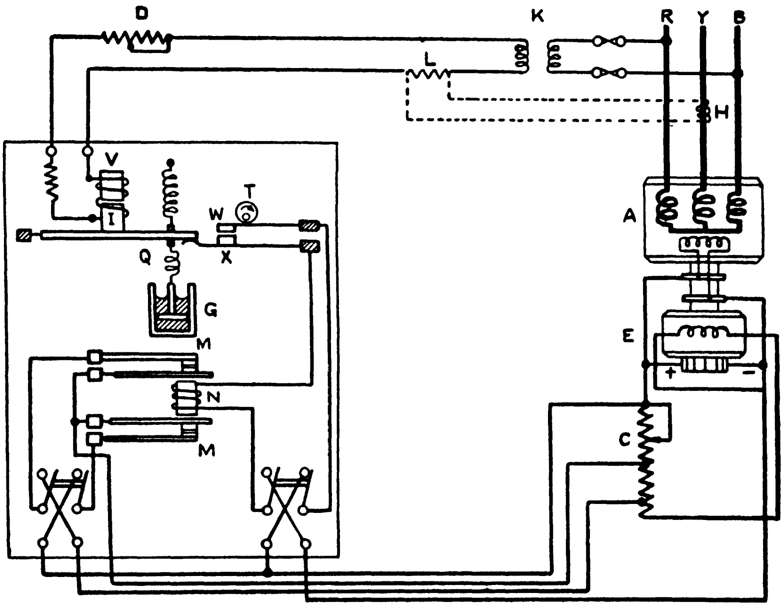

[*Metropolitan-Vickers.*

FIG. 36.

thus the effective value of the exciter field resistance will be correspondingly decreased. The voltage of the A.C. generator will thus be increased, thereby augmenting the ampere-turns of the control coil, which will cause the regulator main control arm to rise to its original position of equilibrium. On the other hand, should the voltage of the generator rise, the gap between the contacts W and X will decrease, and consequently the main contacts M will be open for a longer time per contact cycle, so decreasing the contact ratio.

In order to secure a rapid response and to restrain the regulator from oscillating, a recall spring, which flexibly couples the main control arm and the dashpot G, performs the same function for the Metropolitan-Vickers regulator as the recall spring and eddy current damping mechanism which are features of the Brown-Boveri regulator (see p. 57). The other spring immediately above the recall spring is provided for the purpose of adjustment, and will be recognized as an alternative to the adjustable counterpoise which is a feature of the Tirrill regulator (see p. 39).

The two change-over switches are for the purpose of reversing the direction of the current through the relay and main contacts, thereby equalizing the wear which would otherwise occur due to electrolytic transference of metal by the arc. Similar switches are provided for the same reason on regulators of the Tirrill type.

An advantage claimed for the Metropolitan-Vickers regulator is that pivots have been eliminated, these being replaced in all cases by flat springs.

Stable parallel operation of Metropolitan-Vickers regulators is provided for in much the same manner as in the Tirrill regulator. Referring to Fig. 36, a current transformer H is inserted in the line other than those from which the potential transformer K is excited, and a current proportional to the load current is circulated in the resistor L, the latter being in series with the regulator control coil. A reference to Fig. 23 will shew that the additional voltage drop due to the *reactive* component of the current in L can be arranged to increase the voltage applied to the control coil, thereby increasing the contact ratio and reducing the generator terminal voltage. Thus the reactive currents supplied by the A.C. generators operating in parallel are automatically controlled and the generator power factors thereby equalized.

Metropolitan-Vickers Regulator with Sequence Operating Contacts.—In order to avoid the disadvantage of vibrating contact regulators which results from the contacts having to vibrate continuously even to maintain a constant value of excitation, a scheme has been evolved whereby a second pair of contacts are employed which influence the position of the field rheostat by means of an auxiliary motor.

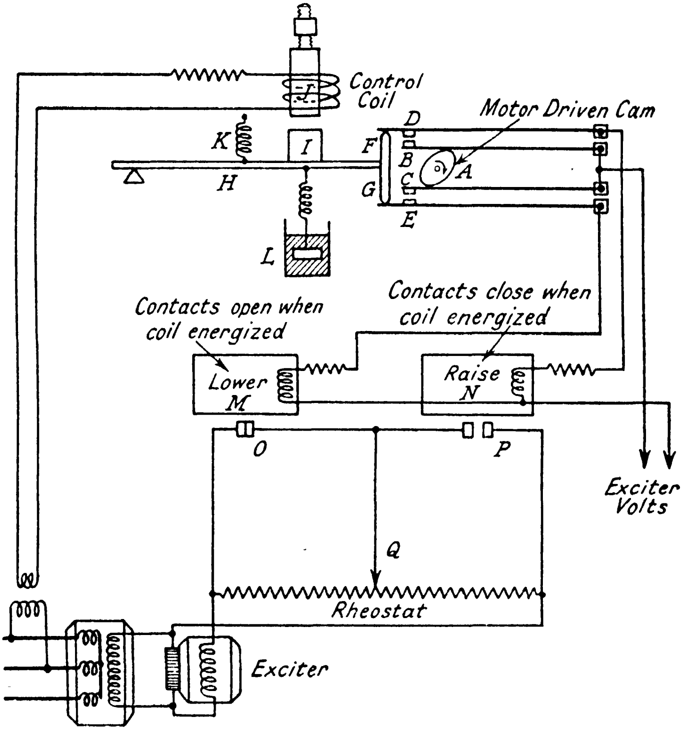

[*Metropolitan-Vickers.*

FIG. 37.

The first step for this purpose consists in separating the dual functions of increasing and decreasing the resistance in the exciter field circuit which are performed by the contacts W and X in Fig. 36. The method of separating these functions is shewn in Fig. 37, and since this scheme operates in principle in the same manner as that of Fig. 36, it will only be necessary to refer to the modifications.

Referring to Fig. 37, the elliptical cam A is driven at a speed of about 200 revolutions per minute, thus imparting an oscillating motion to the contacts B and C. When the voltage of the A.C. generator is normal, the main control arm H is in its mid position. Under this condition contacts B and D, and also contacts C and E, are held permanently open by the stops F and G (the latter being carried by the control arm) independently of the position of the cam, and, in consequence, the relay coils M and N, which control respectively the contacts O and P, are not energized. Thus contacts O remain permanently closed and contacts P permanently open, so that the excitation is dependent on the position of the rheostat contact Q. If, now, the generator voltage rises, the control arm H moves upwards, thereby further separating contacts B and D, but allowing contacts C and E to close, either intermittently or continuously, depending upon the value of the voltage rise. The relay coil M is thus energized and the contacts O consequently open, thereby cutting into the exciter field circuit that portion of the resistance shewn on the left of the contact Q. Similarly, should the generator voltage fall, contacts B and D will close and energize the relay coil N. The contacts P now close, and since under this condition the contacts O are permanently closed, the whole of the field rheostat is short-circuited.

The second step is to arrange for the rheostat contact Q to be operated by means of the auxiliary motor, and this is effected by using two " slug " contactors, one in series with each of the cam contacts. When the contacts BD of the regulator are operating, the corresponding contactor of the auxiliary motor closes, thus starting the motor which moves the contact Q further to the right, thereby decreasing the value of the exciter field resistance and increasing the voltage of the A.C. generator. When the latter has reached its normal value, the control arm H is in equilibrium and the contacts BD finally break, allowing the contactor to stop the auxiliary motor. Conversely, when the contacts CE are operating, the appropriate contactor is arranged so that the direction of rotation of the auxiliary motor is reversed. Thus the movable contact Q is taken further to the left, thereby increasing the exciter field resistance. The necessity for using slow-acting contactors will be apparent when it is remembered that the contactors must remain closed when the cam contacts are vibrating.

It will be evident that the mechanism above described obviates the necessity for the regulator contacts having to make and break continuously. In the case of large generators, which may carry practically constant loads for relatively long periods, the saving in wear of the vibrating contacts is a matter of importance. For example, it may be necessary to run such a generator fully loaded for an extended period and it would clearly be inconvenient to take the regulator out of service during this period for the purpose of reconditioning or renewing of the contacts.

Positive Phase Sequence Control of Automatic Voltage Regulators.—If a single-phase short-circuit occurs on a feeder, the equilateral triangle representing the generator line voltages may be converted into a scalene triangle, due to a reduction of two of the line voltages and an increase of the third. This condition will be examined more closely. For qualitative investigation it may be assumed that the effect of armature reaction upon the generator terminal voltages is imitated by an imaginary inductance in series with each stator winding. This is, of course, the synchronous impedance method.*

Referring now to Fig. 38(*a*), let OA, OB and OC represent the stator windings of the generator, the synchronous impedance being Z ohms per phase, and imagine the short-circuit to occur between terminals B and C, Z' being its impedance. Now the voltage V_{bc} (Fig. 38(*b*)) drives the short-circuit current through the impedance $2Z + Z'$. Fig. 38(*c*) shews the distortion of the line voltage triangle; referring to phase B, in which the normal phase voltage is OV_b, rV_b represents the voltage drop due to the synchronous reactance and rV_b' the resistance drop in the winding, so that the synchronous impedance drop is V_bV_b'. Similarly in phase C, the synchronous impedance drop is V_cV_c', so that the phase voltages become OV_a, OV_b' and OV_c' respectively. The voltage drop across the single-phase short-circuit is $V_c'V_b'$ and it will be evident that the line voltage triangle is $V_aV_b'V_c'$, highly scalene.

A most important function of the automatic voltage regulator is to maintain the stability of the system during the transient conditions which hold when a short-circuit occurs. For this purpose, a rapid increase in the excitation of the A.C. generator is necessary whenever a large voltage drop occurs due to fault or other similar conditions, and conse-

---

* Cf. Fig. 3.

quently turbo-generators are served by exciters which can give outputs much greater than those required for normal full-load conditions, and in addition such exciters are controlled by fast-acting automatic voltage regulators.

Referring again to Fig. 38, imagine first that the control coil of the automatic voltage regulator is connected either between generator terminals BC or terminals CA. Since the effect of the single-phase short-circuit is to *reduce* both these line voltages below their normal values, evidently the regulator will operate correctly for both these connexions, immediately reducing the resistance of the exciter field circuit and increasing the generator terminal voltages. During this time, of course, the appropriate automatic protective gear will operate to isolate the faulty feeder from the system ; thus, in partnership, the automatic voltage regulator and the protective gear provide a vital method of maintaining system stability and, especially in the case of a large system, it is of great importance that both should function as rapidly as possible.

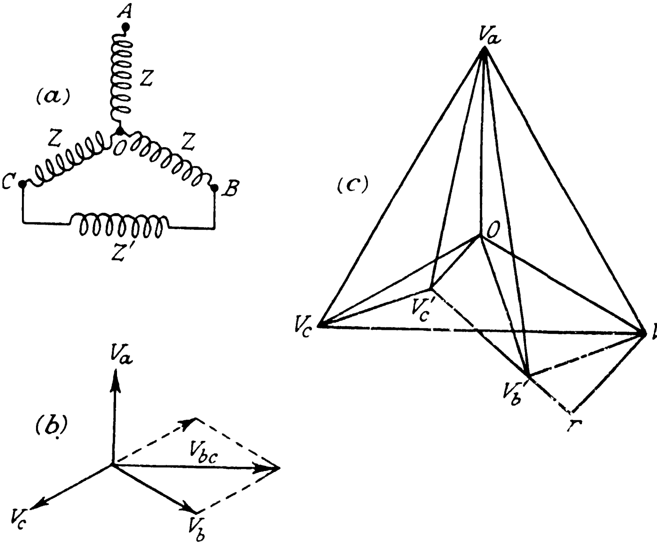

Fig. 38.

Assume now that the control coil of the regulator is supplied from generator terminals A and B. It will be obvious in this case, since under single-phase fault conditions the voltage

V_aV_b' (Fig. 38(*c*)) may be greater than normal, that the automatic voltage regulator may operate incorrectly, *increasing* the resistance of the exciter field circuit and *reducing* the size of the scalene triangle $V_aV_b'V_c'$. Thus the correct operation of the regulator is merely a matter of chance and evidently such chance must be eliminated.

The incorrect operation of the regulator above referred to can be prevented by making the control coil respond only to the "positive phase sequence" component of the scalene triangle. This component is symmetrical under all conditions of unbalance and the regulator will, therefore, completely ignore any voltage unbalance and thus respond correctly to any condition.

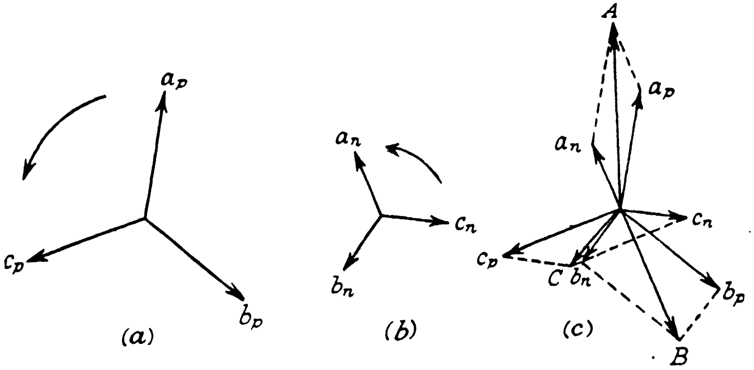

FIG. 39.

According to the theory of symmetrical components,* any unbalanced system of three-phase vectors, whose resultant is zero, can be regarded as being compounded of two symmetrical components of opposite phase sequence. The phase sequence of a system of rotating vectors is determined by the order in which the vectors attain their positive maximum values. Thus in Fig. 39(*a*) the vectors reach their maximum values in the following sequence; a_p, b_p, c_p, and this is called the

---

* A treatment of the theory of symmetrical components is outside the scope of this book, and the reader is referred to a small volume entitled *Elements of Symmetrical Component Theory* by G. W. Stubbings for an elementary exposition of this subject. References to more ambitious works by Wagner and Evans and by W. V. Lyon will be found in the bibliography.

turns and the pressure applied to the top of the stacks decreased, thereby increasing the resistance of the rheostat element which is in series with the exciter field circuit. Oscillations of the moving parts are prevented by coupling the piston of the air dashpot to the arm *f* by means of a spring. It will be obvious that, under normal conditions, the mechanism is stationary.

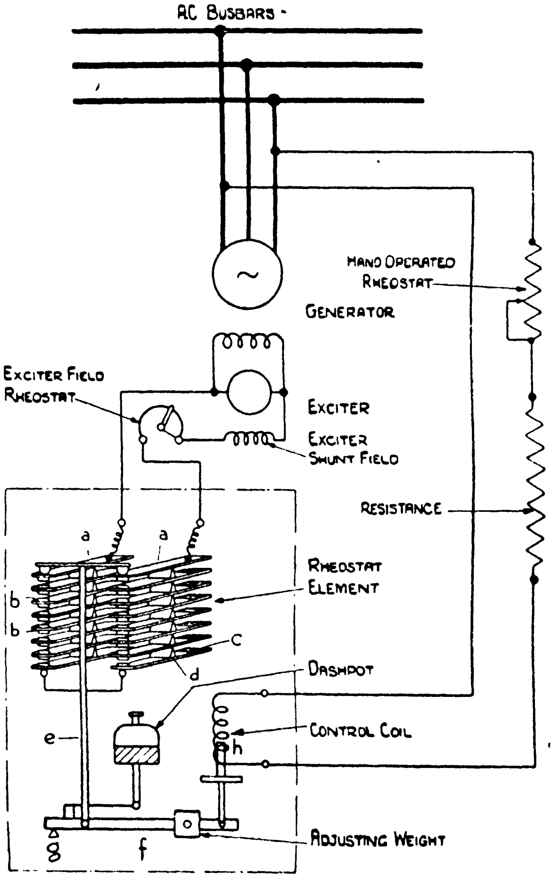

[*B. T.-H.*

Fig. 43.

The Electronic Automatic Voltage Regulator.—The electronic automatic voltage regulator represents, perhaps, the most modern contribution to the art of automatic voltage regulation, and it possesses certain advantages over the electromagnetic types of regulator previously described; there are no moving parts, the circuits comprising only static apparatus such as transformers, condensers, resistors and gaseous discharge tubes. It follows that, due to the absence of mechanical inertia, the regulator is capable of a rapidity of response unattainable with the other types.

The electronic regulator can be arranged to control the excitation either of an A.C. or a D.C. generator, but in either case an A.C. supply is necessary for the purpose of supplying power to the gas-filled discharge tubes.

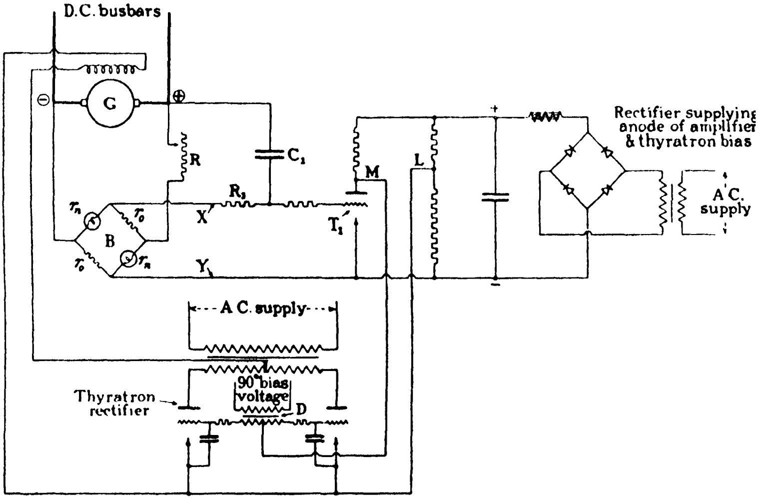

[*Journal I.E.E.*

Fig. 44.

Referring to Fig. 44, which gives a schematic diagram of the regulator as applied to the control of a D.C. generator, it will be seen that the circuit consists of three component parts: (1) The non-linear bridge network B which is connected across the terminals of the generator G, whose voltage is to be maintained constant. (2) The amplifier circuit comprising the amplifier valve T_1, which is lightly loaded to ensure long life. The amplifier is supplied from a D.C. source, this D.C. supply being conveniently obtained from the A.C. source previously referred to through bridge-connected metal rectifiers as shewn. (3) The gas-filled, grid-controlled rectifiers (thyratrons), the rectified output of which is supplied to the generator field circuit.

The non-linear bridge B consists of constant resistors r_o and two non-linear resistors r_n, tungsten filament lamps being utilized for the latter. These lamps are run at half their rated voltage and thus have an indefinitely long life and stable characteristics, filament evaporation being reduced to negligible proportions ; also under reduced voltage, the resistance of the lamp is more dependent on voltage. The material known as " thyrite," a dense inorganic compound of a ceramic nature, provides an alternative to the tungsten lamps. This material has a negative voltage-resistance characteristic, the resistance decreasing 12·6 times each time the voltage is doubled, the change in resistance accompanying the change in voltage being instantaneous, and thus no time lag is introduced in the regulator as is the case when tungsten lamps are employed. If thyrite resistors are used instead of tungsten lamps, they must be placed in the positions r_o instead of r_n, since tungsten and thyrite have respectively positive and negative voltage-resistance characteristics.

At the minimum value of the generator voltage to be maintained constant, the resistors r_n and r_o are made very nearly equal, the bridge B being unbalanced to the extent that the conductor X is 2 or 3 volts negative with respect to the conductor Y. The amplifier valve thus has a small negative bias on its grid electrode and is therefore on a working portion of its characteristic. Any variations of the potential of X with respect to Y will be amplified, and since the potential of the point L is fixed, the potential of the point M will be depressed when the anode current is large and raised when the anode current is small. The operation of the regulator will be clear from a reference to Fig. 45, in which the line JK represents the D.C. potential of the point M when the anode current is small, under which condition M will be positive with respect to L. It will be clear from Fig. 44 that this D.C. potential is applied to the grids of the gaseous discharge tubes. Superimposed on this D.C. potential is a constant A.C. bias voltage which is arranged to lag 90 degrees behind the anode voltage, these two A.C. voltages being supplied by their respective transformers as shewn in the diagram. The resultant of the

D.C. and A.C. voltages is given by the wave AOB. The critical grid voltage corresponding to different values of anode voltage is also given in the diagram (Fig. 45), and it will be seen therefrom that the gas-filled discharge tubes will fire at the point O, early in each positive half-cycle, so that nearly the maximum current from the discharge tubes will be passed through the generator field system. If, on the other hand, the anode current is large, the potential of M will be depressed to a value lower than that of L, and thus the D.C. bias potential applied to the grids of the gas-filled tubes will be negative. Let this negative potential be represented by the line J_1K_1, then it will be seen that the resultant of the A.C. and D.C. grid potentials coincides with the critical grid voltage at the point O′, so that the firing of the tubes will be delayed and thus the current passed through the generator field system will be lower. It will be evident from the foregoing that as the potential of M with respect to L rises, the generator field current will increase and *vice versâ*.

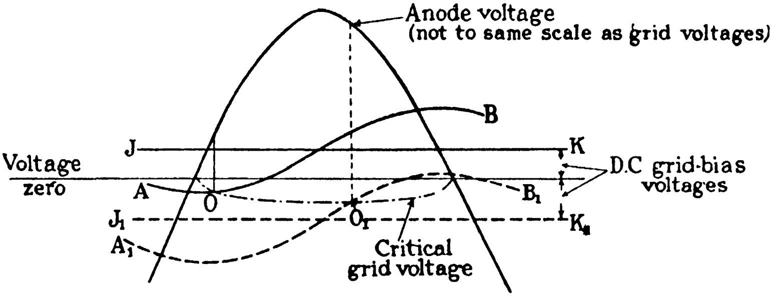

[*Journal I.E.E.*

FIG. 45.

Assume now that the generator load is increasing, so that the terminal voltage falls. The current through the bridge resistors also falls, so that the value of r_n falls. The potential of the conductor X thus becomes more negative, so that the anode current of the amplifiers decreases. The potential of the point M, and therefore of the discharge-tube grids, consequently rises, thereby causing these tubes to fire earlier in the cycle and to give an increased output to the generator field system, thus causing the generator voltage to increase.

Conversely, an increase of generator voltage will result in a decrease in the generator field current.

An important feature of the circuit of Fig. 44 is the method employed to restrain the generator voltage from overshooting the correct value when the regulator is operating. The tendency of the generator voltage to overshoot its correct value is a function of the rate of change of voltage, so that the correcting action must oppose this. The method utilizes a condenser C_1 and a resistor R_1 (Fig. 44), the latter having a high ohmic value compared with the bridge resistance, and consequently C_1 and R_1 may be regarded as connected directly across the armature. When the regulator is not operating there will be no current in C_1. Imagine, now, the generator voltage to be too high, so that the regulator operates to reduce the generator field current. As the generator voltage falls, the condenser C_1 discharges, passing a current through R_1, so that a potential difference appears across this resistor, the condenser end being negative. Evidently the grid potential of the amplifiers will be lowered by this action and the falling potential of M (and of the gaseous discharge-tube grids) will be arrested. This restraining action is at any instant clearly proportional to the current i in the condenser, but $i = C.\frac{de}{dt}$ where C is the condenser capacitance and $\frac{de}{dt}$ is the rate of change of generator voltage, therefore as $\frac{de}{dt}$ decreases, the restraining force decreases, and thus the generator voltage is brought stably to its correct value.

Fig. 46 shews a corresponding scheme as applied to the voltage regulation of an A.C. generator. It will be seen therefrom that the non-linear bridge is supplied from the terminals of the A.C. generator *via* potential transformers and a further three-phase transformer equipped with two secondary windings. One set of secondaries supplies the non-linear bridge through three bridge-connected sets of metal rectifiers, one for each phase. Since the metal rectifiers sets are connected in series, the voltages amongst all the generator terminals are full-wave rectified, added together and their sum applied to the non-linear bridge, so that by this means a positive phase sequence response is obtained from the regulator. The other set of secondary windings is for the purpose of supplying, through metal rectifiers, the anodes of the amplifiers and the grid-bias potential of the gaseous discharge tubes (thyratrons). Connected across the rectified potential difference is a resistor, a point in which is connected to the filaments of the thyratrons, thus anchoring their potentials (cf. point L in Fig. 44). The thyratron anodes are supplied through the anode transformer, the secondaries of which are arranged in interconnected star, the midpoint connexion of each phase being utilized to supply, *via* the three-phase grid transformer, the A.C. component of the grid voltage which is in quadrature with the anode voltage, the former voltage being necessary in order to control the firing-point of the thyratrons.

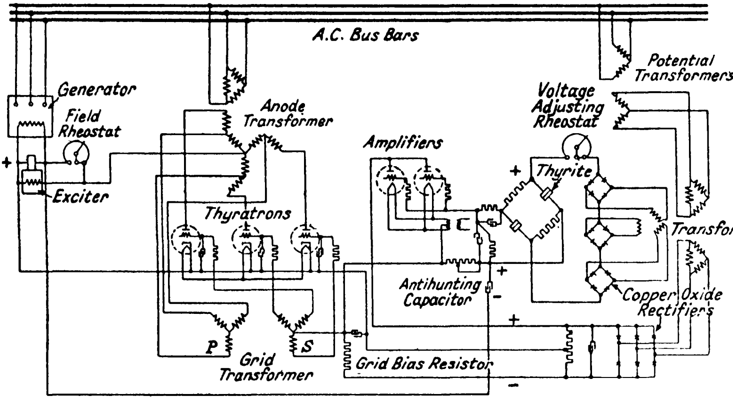

[*Trans. Amer. I.E.E.*

FIG. 46.

If, again, the load on the generator is assumed to increase and the terminal voltage to fall, the current through the non-linear bridge will decrease so that the resistance of the thyrite arms will increase. Thus the potential of the amplifier grids will become more positive and the output from these valves will increase. The increased current passes from the filaments through the grid-bias resistor, with the result that the potential of the star point of the grid transformer secondary becomes more positive. Referring again to Fig. 46, it will be evident that under this condition the thyratron tubes will fire earlier in the cycle and thus the output given to the field system of the exciter will be increased. The value of the voltage to be maintained constant may, of course, be changed by means of the voltage-adjusting rheostat.

As in the case of the D.C. regulator, the anti-hunting capacitor, with resistance in series, is connected directly across the exciter armature. Imagine, now, the exciter voltage to be falling rapidly and overshooting ; under this condition the anti-hunting condenser will discharge, thereby sending a current through the thyratron grid-bias resistor, thereby raising the potential of its upper end and arresting the fall of the exciter voltage.

It will be realised that the electronic voltage regulator not only operates to control the generator voltage, but in addition it actually supplies the exciter field current. In fact, the field current of the A.C. generator could be supplied directly, thus obviating the necessity for an exciter, providing the generator field current is not so large as to be beyond the capacity of the gaseous discharge tubes. At the present time, this type of regulator is mostly employed in connexion with small machines where special requirements, such as very close regulation, are to be fulfilled, but the regulator is also used in connexion with turbo-generators.

The Theory of Mutual Field Windings.—If a second winding is provided on the exciter poles and short-circuited upon itself, this winding will carry an impulse of current whenever the exciter field current is changed. The action of the mutual winding will readily be understood by the assistance of Fig. 47, in which the field and mutual windings are respectively represented by F and M. Referring first to diagram (*a*), imagine that the field current is decreasing ; as the flux com-

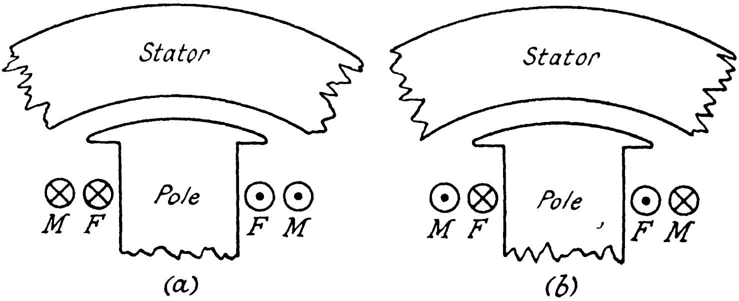

FIG. 47.

mences to change, an e.m.f. is induced in M and, by Lenz's law, the corresponding current must be in the direction shewn, the ampere-turns thereof tending to maintain the flux at its former value. In consequence, it will be clear that since any given value of flux requires only a definite value of ampere-turns, the current in the field winding will fall rapidly while the current in the mutual winding will rise at the same time. The flux will not reach the value corresponding to the new value of field current until the change in the energy stored in the magnetic field has been completely dissipated in I^2R losses, this taking place partly in the mutual winding and partly in the field circuit. As shewn in Fig. 47(*b*), when the field current increases, the current in the mutual winding will provide a component of ampere-turns which again will tend to maintain the flux at its former value. It will be evident that for this purpose the current in M must oppose the current in F and the latter increases more rapidly than it would do if the mutual winding were absent. A little consideration will shew that, when the field current increases, the energy input to the field must be greater if the mutual winding is present, and the excess energy must be dissipated in the form of I^2R losses in the mutual winding.

It will be clear from the foregoing that the resultant effect of the mutual winding will be to accelerate changes of current in the field winding, and from this viewpoint the effect is evidently tantamount to a reduction in the inductance of the field circuit.

When the mutual winding is absent, the field winding must carry both the currents shewn in F and M (Fig. 47), hence the change in current from its original to its new value is delayed. If a mutual winding having a magnetic coupling of 100 per cent with respect to the field winding could be introduced, then the current in the field winding would instantly assume its new steady value corresponding to the changed conditions, and the transient current would be wholly carried by the mutual winding, which would thus be entirely responsible for the conversion of the *change* of field energy into heat.

It will be obvious that the transferring of the duty of energy conversion from the field to the mutual winding will greatly relieve the duty of the contacts of the regulator, since the absence of inductance implies the absence of arcing.

Graphical Determination of Resistance Values of Exciter Field Rheostat.—The diagram given in Fig. 48 will clearly shew how the respective values of resistance required in the exciter field circuit for self- and separately excited machines, giving precisely the same values of exciter armature voltage, are obtained. Considering first the self-excited (shunt) exciter, let the curve O*ba* represent the magnetic characteristic of the field iron. OE and OC represent respectively the full-load exciter armature voltage and field current, i.e., when nearly all the rheostat resistance is cut out. For a voltage O*e*, therefore, the field current will be O*c*, the corresponding working point on the curve being *b*. Let O*b* be produced until it cuts the vertical C*a* produced in *d*. If the no-load and full-load resistances of the field circuit be represented by R_n and R_f respectively, then the difference

$$= R_r = R_n - R_f = \frac{bc}{Oc} - \frac{aC}{OC}$$

$$= \frac{dC}{OC} - \frac{aC}{OC}$$

$$= \frac{da}{OC}.$$

Thus the intercept *da* represents the range of the resistance of the rheostat to a given scale.

Suppose now that the exciter has its field circuit connected to a separate source of constant excitation voltage, the latter having the same value OE as in the previous case. If the exciter armature is to give the same voltage as before, namely O*e*, the total resistance of the exciter field circuit at no-load must be $\frac{OE}{Oc}$. Now draw the line O*f* produced, cutting C*a* produced in *g*, then again:

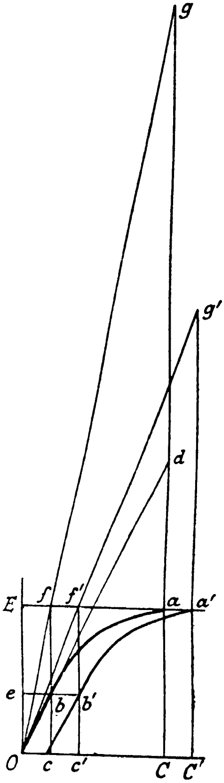

[B. T.-H.

FIG. 48.

$$\begin{aligned} R_r = R_n - R_f &= \frac{OE}{Oc} - \frac{aC}{OC} \\ &= \frac{gC}{OC} - \frac{aC}{OC} \\ &= \frac{ga}{OC}. \end{aligned}$$

Thus the intercept *ga* represents the required resistance of the rheostat to the same scale as before. The diagram shews that, for low values of exciter armature voltage, the rheostat resistance tends to assume a constant value in the case of the self-excited machine, while in the case of separate excitation a reduction of exciter armature voltage, when the latter is low, requires a largely increased value of resistance in the rheostat.

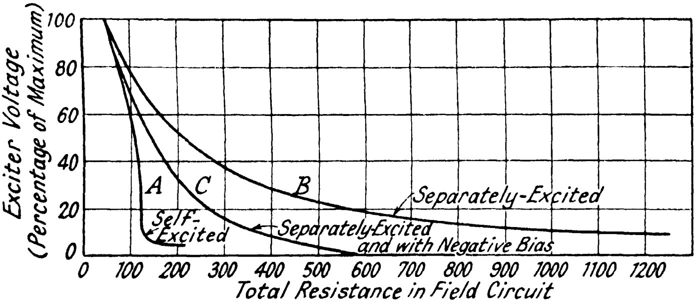

[B. T.-H.

FIG. 49.

Curves of exciter armature voltage plotted against field resistance as base are given in Fig. 49, curves A and B referring to self-excited and separately excited machines respectively. It is seen that curve B assumes an asymptotic value at values of voltage approaching zero.

Biased Field Windings used in Conjunction with Separate Excitation.—If the mutual field winding previously referred to, instead of being short-circuited upon itself, is supplied with a small current in the opposite direction to that flowing in the main field winding, then the latter will require a correspondingly increased current to cancel the effect of the former, or bias, current. Referring again to Fig. 48, the curve *Oba* has been moved to the right through a distance *bb'*. To produce an exciter armature voltage O*e*, a field current equal to Oc′ will be required instead of the current Oc which would be necessary if the bias current was zero. If the number of turns per pole of the field and bias windings were equal, then the bias current would have a value, of course, of Oc′ − Oc, or cc′. The total field resistance required corresponding to the current Oc′ is $\frac{\mathrm{OE}}{\mathrm{O}c'}$. Drawing the field resistance line Of′ and producing it to cut C′a′ produced in g′, the intercept g′a′ now gives, still to the same scale as before, the value of rheostat resistance required for the exciter armature voltage Oe. Thus it will be evident that the effect of the bias current is largely to reduce the resistance required in the rheostat for a given exciter armature voltage. The curve C given in Fig. 49 refers to a separately excited machine equipped with a negatively biased winding, and it will be seen therefrom that, at low values of exciter armature voltage, the characteristic is such that the resistance for zero voltage has now a finite value.

Obviously the effect of the negative bias is to increase slightly the current in the rheostat, but this increase of current is more than offset by the large decrease in the resistance of the rheostat. When the exciter is operated in conjunction with an automatic voltage regulator of the vibrating type, therefore, the power dealt with by the relay contacts will be reduced by utilizing bias, while in the case of the direct-acting regulator, the same expedient will largely reduce the value of the resistance connected to the contact sectors.

Influence of the Shape of the B-H characteristic upon the Operation of Automatic Voltage Regulators.—If a self-excited exciter is employed, the response of the regulator, or the speed with which the exciter voltage varies when the field current is altered, depends to a large extent upon the shape of the B-H characteristic of the exciter field iron. In Fig. 50, let the curves A and B refer to the no-load characteristics of two exciters. Let OY and OZ represent the field resistance lines with the regulating rheostat short-circuited and entirely in circuit respectively. If, now, when the exciter field current is represented by Oc, the rheostat is suddenly short-circuited, then the voltages available for increasing the field current and hence the exciter generated voltage are pq and pr for the curves A and B respectively. With all the resistance in circuit and a field current Oc again, the voltages available for decreasing the field current and the exciter generated voltage are *qs* and *rs* for the curves A and B.

Now the rate of variation of the exciter voltage will obviously be dependent upon the lengths of the intercepts between the B-H curve and the field resistance lines. Thus the rate of increase of exciter voltage is greater in the case of curve B (intercept *pr*), while the rate of decrease of exciter voltage is greater in the case of curve A (intercept *qs*), but it will be obvious that if curve B is selected and compared with curve A, the *percentage* increase in the rate of "building up" the exciter (increase of intercept from *pq* to *pr*) is very much greater than the percentage decrease in the rate of "building down" the exciter voltage (decrease of intercept from *qs* to *rs*). It will thus be evident that in order to obtain the best results with an automatic voltage regulator, the field iron of the exciter should have the B-H characteristic represented by curve B which rises more steeply and bends over more rapidly than curve A.

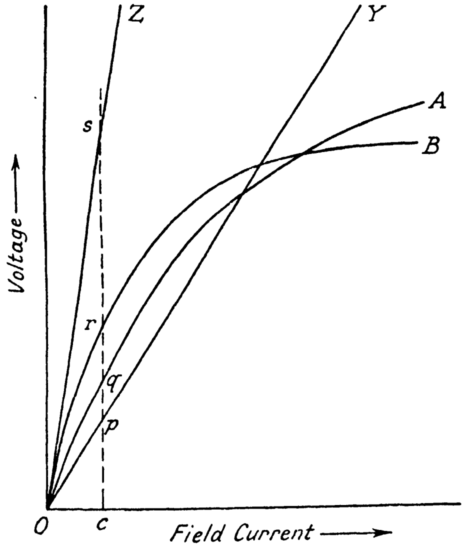

FIG. 50.

Self- and Separately Excited Exciters.—The employment of a separately excited exciter not only stabilizes the operation of the exciter but it also facilitates quick response of the exciter voltage when a change of the A.C. generator field current is required. The relative response of an exciter when self- and separately excited is shewn in Fig. 51, from which it will be seen that both the rising and falling curves relating to the separately excited machine shew much faster adjustments of voltage. In the case of the rising curve, this is due to the fact that when the field rheostat connected between the field winding belonging to the main exciter and the armature of the auxiliary exciter is short-circuited by the automatic voltage regulator, the voltage applied across the field of the main exciter is always a maximum, but in the case of the shunt (self-excited) exciter, the short-circuiting of the field rheostat by the regulator makes available across the exciter field winding only that voltage which, at the moment, is being generated by its armature. In the case of the falling curve, the response of the separately excited machine is faster since much more resistance has to be inserted in the field circuit in order to reduce its voltage to the same value as in a shunt exciter, and this greater resistance is responsible for a reduction in the time constant L/R of the field circuit (see Fig. 49).

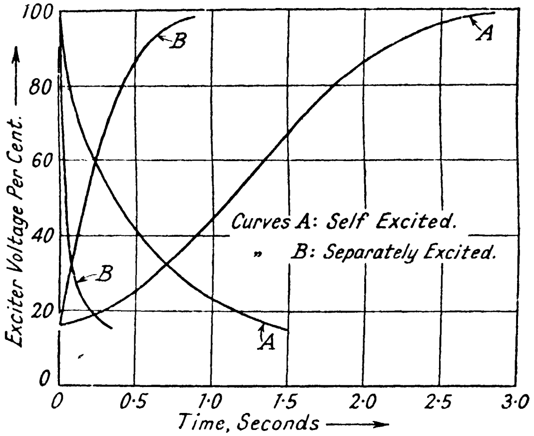

Fig. 51.

High Speed Excitation.—When a short-circuit occurs in a power system, the voltage at the point of the short-circuit vanishes while the voltage at other points of the system is greatly reduced. This reduction of voltage may be accompanied by widespread dislocation on the system since it has been shewn in the previous chapter (see pp. 12 and 13) that the maximum power that an A.C. generator can give depends upon the busbar voltage and upon the excitation. The stability of a power system under fault conditions can evidently be increased by the employment of exciters having a high rate of response operating in conjunction with automatic voltage regulators. An exciter of normal design will have a response of 30 to 50 volts per second, but machines can be designed for a rapidity of response which may be as high as 5,000 volts per second. To obtain an *initial* high rate of response, the " ceiling voltage " (i.e., the exciter voltage obtained with all field resistance short-circuited) generally exceeds very considerably the value necessary to produce the desired field current.

In addition to a high ceiling voltage, the necessary modifications in the design of exciters in order to secure a high rate of response are as follows : if the field magnet poles of the exciter are connected in parallel instead of in series, the time constant of the whole field circuit L/R will be reduced since the inductance is proportional to the *square* of the number of turns in series while the resistance is proportional to the number of turns in series. Again, if the number of conductors on the armature of the exciter is increased, a corresponding reduction in the field flux can be made. Finally, the airgap should be reduced to a minimum in order that the number of field turns may also be a minimum. The virtual necessity of supplying the exciter field circuit from a constant voltage source will be evident from Fig. 51.

The rotative speed of the exciter will, if direct-connected, necessarily be that of the A.C. generator, and this should be as high as possible in order to reduce the exciter flux requirements. In the case of low-speed A.C. generators, such as those in hydro-electric power stations, exciters driven by high-speed motors are obviously preferable to direct-connected exciters.

Position of the Automatic Voltage Regulator.—The regulator should always be connected to the generator side of the machine circuit breaker. Should the circuit breaker disconnect the generator from the busbars when the generator is delivering its rated load, the regulator is then available for preventing a dangerous rise in the generated voltage with the consequent overstressing of the stator windings. This naturally can only apply when each generator is provided with its own regulator.

CHAPTER IV

AUTOMATIC SYNCHRONIZING OF A.C. GENERATORS

Introduction.—Before a generator can be connected to the busbars three requirements must be satisfied: (1) the e.m.f. of the incoming machine must have the same value as the busbar voltage, (2) the two voltages must be in phase, (3) the frequencies must be equal. In the case of unattended hydro-electric power stations, the operation of synchronizing must be carried out automatically, but there is a tendency at the present time to adopt automatic synchronizing even in the case of manually operated power stations. This tendency is due to the large size of generators now being installed and also to the interconnexion of power stations which require that the operation of synchronizing shall be accompanied by a high degree of precision and reliability. For this purpose, apparatus for automatic synchronizing has been developed which attains a rapidity of action and an accuracy which cannot be approached by manual means and examples of two representative automatic synchronizing devices will now be described.

The Brown-Boveri Automatic Synchronizing System.—This apparatus consists of an automatic synchronizer, the function of which is to ensure compliance with the second requirement, and an automatic speed-matching device to satisfy the third. The first requirement is taken care of, since the automatic voltage regulator on the generator to be paralleled will bring the e.m.f. of this machine to its correct value, while the busbar voltage is, of course, practically constant. It is important that the voltage difference should not be large at the instant of closing the circuit breaker since otherwise a large value of reactive kVA will be exchanged between the busbars and the incoming machine. The effect of a voltage difference is, however, minimized automatically by the synchronizer, as will be shewn later.

As in the case of manual synchronizing by means of lamps, the automatic synchronizer is connected so as to respond to the resultant voltage of the busbars and of the incoming machine, and two potential transformers can, of course, be connected so that this resultant voltage is either the sum or the difference of the two component voltages at synchronism. The former case is known as the "lamps bright" method, while the latter is known as the "lamps dark" method. Referring to Fig. 52(*a*), the wave e_1 represents the busbar voltage and the wave e_2 the voltage of generator B which is to be paralleled. It will be seen that the frequency of generator B is too low since it completes only seven cycles while generator A completes eight cycles. Fig. 52(*b*) shews the difference of e_1 and e_2 and this wave is, of course, obtained by reversing the phase of e_2 and then adding this reversed wave to e_1. The envelope of this modulated wave e_1-e_2 is, of course, a sine function of low frequency and is shewn dotted in the diagram. At the point at which the modulated wave is zero, the voltages e_1 and e_2 are equal and in phase, and at this instant, therefore, the incoming generator could be connected to the busbars since the synchronizing lamps L would have no voltage across them. This method of synchronizing is the "dark" method. Fig. 52(*c*) shews the sum of e_1 and e_2 and it will be evident that when the two voltages are equal and in phase the voltage across the lamps L is a maximum, so that syn-

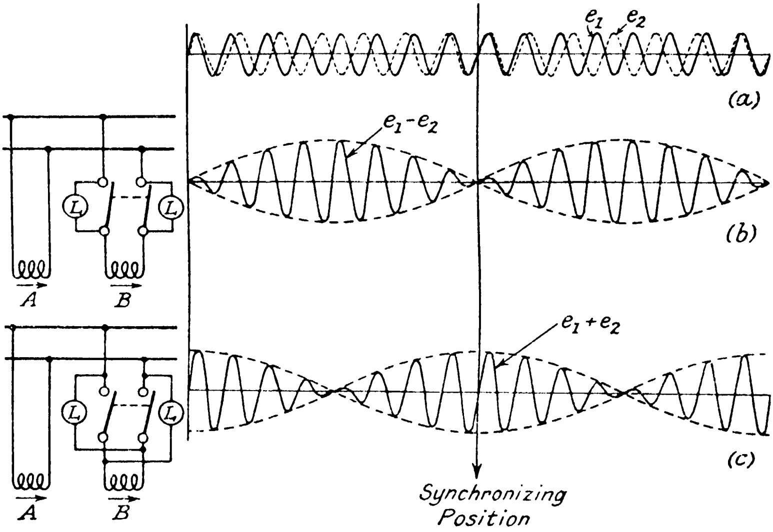

FIG. 52.

chronism occurs with "lamps bright." A comparison of Figs. 52(*a*) and (*b*) will shew clearly that the "lamps dark" method of synchronizing is much the more accurate, as it will be evident from the envelope that a small angle between the two voltages produces a considerable resultant voltage, while in the case of the "bright" method a considerable phase angle does not appreciably affect the resultant voltage. The dark method, however, has the disadvantage that, should the voltage fail, owing to the blowing of a fuse or other cause, the generator may be connected to the busbars at the wrong instant with disastrous results. For this reason the bright method of synchronizing has been chosen for most automatic synchronizers since it is the more reliable and it does not call for identical voltages.

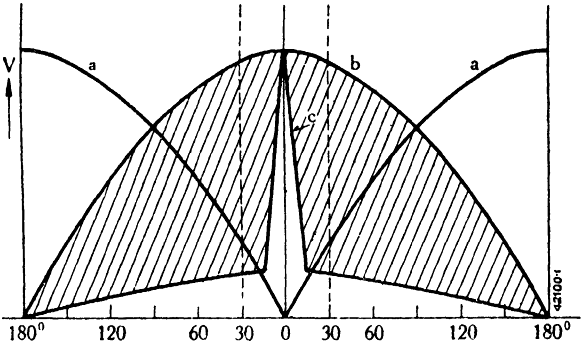

[*Brown-Boveri.*

FIG. 53.

Since (see Fig. 52(*c*)) the very flat curve of the envelope in the region of synchronism does not allow of the circuit breaker closing with sufficient precision, a modifying device is employed for the purpose of increasing the sensitivity of this method. Referring to Fig. 53, curves *a* and *b* shew the synchronizing voltage envelope by the dark and bright methods respectively, and the function of the modifying device is to absorb the shaded part of curve *b* thus leaving curve *c*, and it will be evident that if the mechanism for the closing of the circuit breaker is responsive only to this voltage, accurate synchronism will result.

The automatic synchronizer is shewn in Fig. 54 and consists essentially of two parts, namely, the relay, the function of which is to close the circuit which energizes the closing mechanism of the circuit breaker at the correct instant, and the modifying device which modifies the operating torque of the relay so that the latter responds very sensitively when the potential transformers are connected for the bright method of synchronizing. Referring to Fig. 54, the operation of the relay is based on Ferrari's principle and consists of an aluminium disc which responds to the torque exerted by two electromagnets, m_1 and m_2; the electromagnet m_1 tends to rotate the disc in a counter-clockwise direction and therefore provides the restraint action, while m_2 tends to rotate the disc in a clockwise sense and thus provides the operating torque,

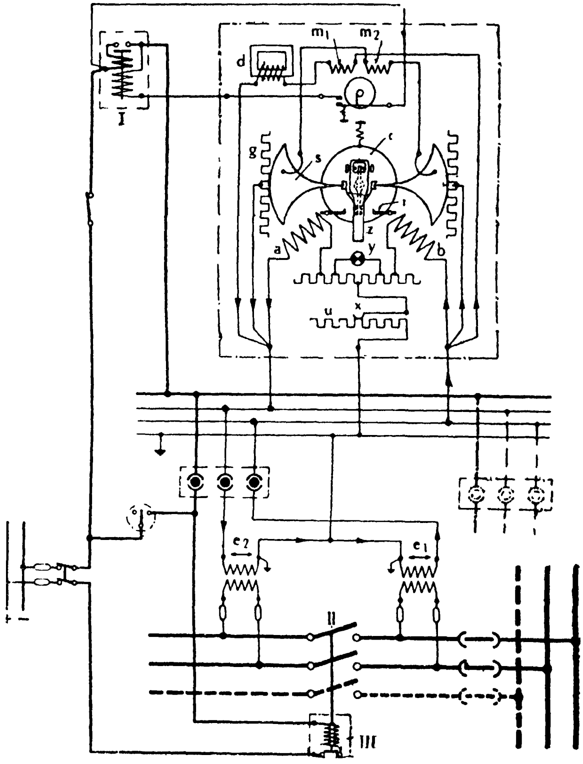

[Brown-Boveri.

Fig. 54.

which, when sufficiently large and applied for a sufficiently lengthy period, will wind up the thread round the grooved pulley, to which it is attached, against the force exerted by a spring, and eventually close the relay contact.

The modifying device is an adaptation of the Brown-Boveri automatic voltage regulator, in which the main spring is omitted and the control coils *a* and *b* are connected respectively to the two voltages to be synchronized, e_1 and e_2. It will be evident that when e_1 and e_2 are in phase, the currents in coils *a* and *b* will be in phase and the resultant torque exerted on the aluminium drum *c* will be zero. On the other hand, if there is a phase difference between e_1 and e_2 the drum will, of course, tend to rotate, but its travel is limited in both directions by the stops *i*. Referring to Fig. 52(*a*), it will be seen that to the left of the synchronizing position, e_1 leads on e_2 and the corresponding currents in the operating coils *a* and *b* will give rise to (say) a counter-clockwise torque, while since to the right of the synchronizing position e_1 lags behind e_2, the torque will evidently be clockwise. As the difference between the two frequencies decreases, the oscillations of the aluminium drum will become slower. It will be evident from Fig. 52(*c*) that the time of one oscillation will be represented by the length of the envelope.

When the two voltages are in phase, the electromagnetic torque exerted on the drum will be zero, and since the drum is subjected to a weak controlling force due to the auxiliary spring it will, under this condition, be in the position shewn in the diagram and the resistors *g* will be short-circuited, thereby exposing the relay coil m_2 to the sum of the two voltages. For all other positions of the aluminium drum it will be evident that varying values of resistance are inserted in series with coil m_2, the maximum resistance being inserted when the drum is at either of its end-travel positions when the current through m_2 will be practically zero. The relay coil m_1 is excited directly by the sum of the two voltages, but a choke coil *d* is connected in this circuit and the reason for this will be referred to later.

The diagram given in Fig. 55 is based on the assumption that the two frequencies are widely different at first, but this difference is decreasing. This is indicated by the envelope marked $e_1 + e_2$ (cf. Fig. 52(*c*)), the short time base of the left-hand envelope representing, of course, a relatively large frequency difference and the increases in the time base lengths of successive envelopes represent a decreasing frequency difference. Both the relay operating and restraining torques are dependent upon $e_1 + e_2$ but while the restraining torque exerted by coil m_1 is proportional to $e_1 + e_2$ at every instant (see curve *b*, Fig. 52), the operating torque is, of course, controlled by the position of the drum *c* (Fig. 54). This torque exerted by coil m_2 is clearly modified by the effect of the resistors *g* which are dimensioned so as to give an operating impulse as shewn by wave *a* (Fig. 55; cf. curve *c*, Fig. 53), this impulse coinciding with the position of zero resistance. Clearly the operating torque available for closing the relay contacts will be the difference between the restraining and operating torques, and this is represented in the diagram by the black portion *c*. The area of the black triangle is an indication of the effective torque-time integral, and it will be seen that this area grows as the difference between the two frequencies decreases, due to the increase of the base of the triangle. Evidently when the difference between the two frequencies is sufficiently small, the effective torque is maintained for a time which is long enough to allow the cord, which is attached to a grooved pulley on the relay disc, to wind up the bottom contact from its lowest position and thus close the relay contacts. Obviously the restraining torque *b* is very much greater than the operating torque *a* since the former is effective during very nearly the whole of each modulated wave, and this fact ensures that the relay operation always commences from the point when the bottom contact is at its lowest position. In other words, the bottom contact never

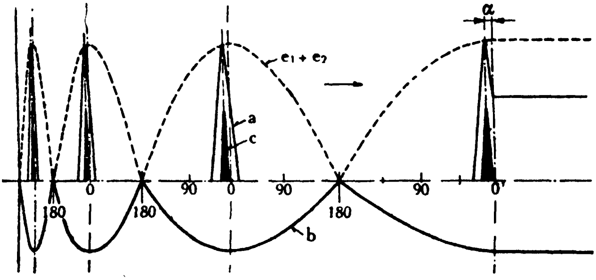

[*Brown-Boveri.*

FIG. 55.

"floats."* Consequently, the relay contacts will only close when the effective torque is maintained for a sufficient time, that is, when the frequency difference is small enough to allow of the base of the black triangle *c* to be of sufficient width.

It will be obvious that if the voltage of the incoming generator is high, greater precision in synchronizing is desirable and this is achieved by the choke coil *d* previously referred to. The core surrounded by this coil becomes saturated if the voltage is higher than normal, and therefore the inductance falls so that the current through the restraint element m_1 rises. It will be evident from Fig. 55 that the consequent increase in restraint torque *b* will result in the decrease of the *height* of the black triangle *c* which represents the effective relay torque. Since, as previously explained, the closing of the relay contacts can only occur when the *area* of the triangle *c* is sufficiently large, the decrease in height must be matched by a corresponding increase of base. In other words, the two frequencies must coincide for a longer period when the generator and busbar voltages are different than when they are approximately equal, and thus in the former case greater precision is achieved.

Referring again to Fig. 55, it will be seen that the peak of the black triangle *c* is ahead of the true synchronous position by the angle α and consequently the operation of the relay always occurs in advance of the instant at which synchronism is achieved. This angular displacement is necessary since the operation of the relay and afterwards the closing of the circuit breaker requires a definite time, and in order that the latter shall close at the correct instant, the closing of the relay contacts must be initiated in advance of this instant. This is achieved (see Fig. 54) by mounting a sleeve friction-tight on the shaft which carries the aluminium drum *c* and the heavy pointer *z*. The jewelled cups, which form the sector bearings, are carried by this sleeve and a projection thereon comes into contact with limit stops when the rotor oscillates, thus restricting its displacement. Imagine (say) the drum to be moving in a counter-clockwise sense, then owing to the limit imposed by the stop, the sleeve, and therefore the sectors,

---

* By "floating" is meant incorrect operation as a result of a succession of separate impulses, each of insufficient magnitude to cause operation individually, due to the contact not having fallen back sufficiently quickly between impulses.

will not move through as large an angle as the drum. When the drum movement reverses in direction, the sectors will thus be in advance of the pointer by this angle so that the resistors *g* will be short-circuited in advance of the moment when the drum attains its central position, i.e., in advance of the moment when the two voltages are in synchronism. Initiation of the closing of the circuit breaker will thus be advanced by the necessary angle α (see Fig. 55), which can be adjusted to suit the operating mechanism of the breaker.

When the relay closes, a direct-current is passed through the lower coil of the intermediate relay (I) (see Fig. 54) which closes the contacts of this relay and energizes the upper, or holding coil. This latter coil keeps the contacts of the relay (I) closed until the circuit breaker (II) is closed by means of coil (III). When the circuit breaker is completely closed, the end travel contacts of (III) break the D.C. circuit. The intermediate relay is necessary since it would be inadvisable to allow the contacts of the synchronizing relay to carry the heavy current required for operating the circuit breaker.

The sensitivity of the automatic synchronizer can be controlled by means of the adjustable resistor *u*. If the contact *x* is moved to the left, the current through the control coils *a* and *b* of the modifying device and therefore the torque exerted on the drum *c* is reduced. This results in a decrease in sensitivity and thus synchronism is attained more rapidly at the expense of a lower degree of precision. On the other hand, if the contact *x* is moved to the right, the resistance in series with coils *a* and *b* is decreased so that the control current and the torque increases, with the result that the device becomes progressively more sensitive and greater accuracy of synchronizing is attained, but the operation will evidently be carried out at a slower speed.

An optical system, or synchroscope, is a feature of the synchronizer. This takes the form of a lamp *y*, which is subjected to the sum of the two voltages, e_1 and e_2, so that it gives maximum brilliancy when the incoming generator is in phase with the busbar voltage, and is completely dark when the two voltages are displaced by a phase angle of 180 degrees. A pointer is attached to the arm *z* and moves in front of the lamp so that the latter casts a shadow on a dull glass screen. The direction of the shadow indicates whether the speed of the incoming generator has to be increased or decreased so that the device acts as a synchroscope if it is desired to synchronize manually.

The Brown-Boveri Automatic Frequency Matching Unit.—While the automatic synchronizer will operate to close the automatic circuit breaker at the most favourable instant, the matching of the electrical speed of the incoming generator with that of the machines connected to the busbars must be carried out manually unless automatic apparatus for this purpose is provided in addition to the synchronizer. The automatic frequency matcher consists of two components, (*a*) a small three-phase motor resembling a slip-ring induction motor having the same number of turns on both the stator and the rotor, which operates as a synchroscope, and (*b*) a contactor device which controls an auxiliary motor which regulates the governor, and therefore the speed, of the turbine driving the generator. Referring to Fig. 56, which gives a schematic diagram of connexions of the frequency matching unit, it will be seen that the stator windings of the motor *a* are connected to the busbars through a potential transformer, while the rotor windings are excited from the terminals of the incoming generator. The currents in the stator windings will set up a rotating magnetic field, the speed of which will be proportional to the busbar frequency, while the speed of the rotating field set up by the rotor currents will be proportional to the speed of the incoming generator. Since the rotor is free to move, it will rotate at a speed proportional to the difference between the two frequencies in order that the magnetic fields set up by the stator and rotor ampere-turns, respectively, shall coincide. For example, suppose the busbar frequency to be 50 and imagine the frequency of the incoming generator to be (say) 50·5, so that the electrical speed of the incoming generator is 1 per cent too high. Under this condition the motor *a* will rotate (say) in a counter-clockwise sense at a slip of 1 per cent. On the other hand, if the frequency of the incoming generator dropped to 49·5, then the motor would rotate in a clockwise direction at the same slip speed. Finally, if the two frequencies were identical the motor would be stationary, waiting for the automatic synchronizer to function.

The shaft of the induction motor carries an aluminium disc which rotates in a magnetic field set up by two permanent magnets in order to provide a braking force, this being necessary to restrain the tendency for the synchroscope motor to hunt. Fixed near the periphery of the aluminium disc is a pin which actuates the contacting mechanism once per revolution. If desirable, a number of such pins can be employed, and thus the contacting mechanism can be actuated *p* times per revolution, where *p* is the number of pins. The contactor gear consists of a horizontal rod, *b*, supported at each end by two flat springs, the bottom ends of the latter being fixed, as shewn in the diagram. This rod carries the two moving contacts, one at each end, these taking the form of steel blades fixed to the flat springs with silver rivets at the top ends. The fixed contacts, which are adjustable, protrude slightly beyond the poles of triangular permanent magnets. The rod, *b*, is

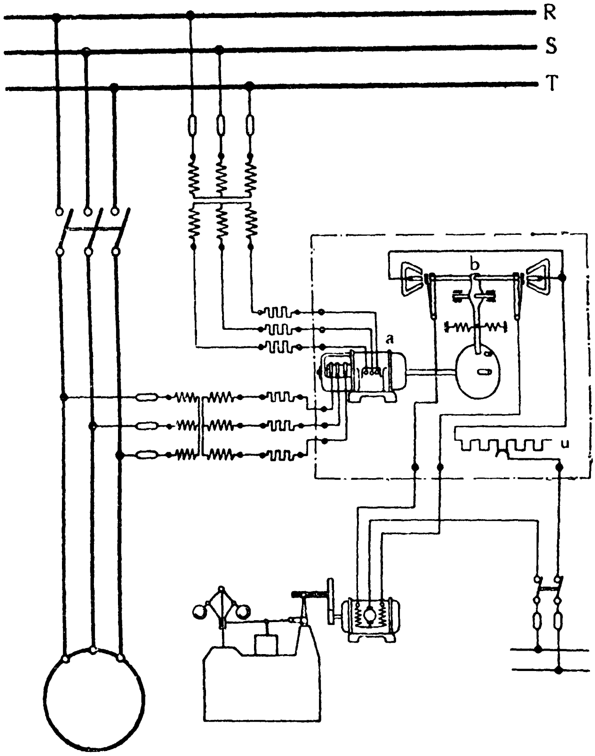

[*Brown-Boveri*.

FIG. 56.

maintained in its neutral position (i.e., with both contacts open) by means of two control springs which operate on a vertical connecting arm, the latter being attached to the rod centre by a flexible coupling and pivoted at a point above the control springs.

Imagine, now, the synchroscope motor to be rotating slowly in a clockwise direction; when the pin engages with the vertical arm, the horizontal arm will be moved slowly to the left when the steel blades carrying the silver contacts will be suddenly attracted to the poles of the permanent magnet. Thus the contact will be a positive one, and when the vertical arm disengages with the pin, the contact breaking will be equally definite. The permanent magnet also provides a magnetic field which blows out the arc formed at the contacts, thus reducing deterioration of the latter to a negligible value.

With a large frequency difference, the speed of the synchroscope motor will be relatively high and the mechanism would appear to cause very frequent operation of one of the contacts. The horizontal rod, however, is rigidly attached to a toothed segment which meshes with the pinion of a second damping disc, the arrangement being the same as that shewn in Fig. 26 (*pom*). When the frequency difference is large, this damping mechanism provides a force sufficiently strong, once the contacts are closed, to restrain them from opening. On the other hand, if the frequency difference is small, the speed of the synchroscope motor will be low and the damping mechanism will, under this condition, permit the contacts to open when the pin disengages with the vertical arm.

When the speed of the incoming generator is low, the mechanism thus operates to close the appropriate contacts, allowing the speed-regulating motor, to operate on the turbine governor, thereby increasing the steam supply and raising the speed of the set. When the frequency of the latter closely approaches that of the busbars, the contacts open and close at increasingly large intervals and thus the speed-regulating motor is subjected to a series of impulses until the two frequencies are identical, when the contacts remain open. If the speed of the incoming generator is high, the other contacts are brought into operation, thus reversing the direction of rotation of the speed-regulating motor. This motor generally takes the form of a D.C. series motor with two separate and identical field windings for reversing the direction of rotation, as shewn in the diagram. An adjustable resistor *u* is connected in series with this motor for the purpose of controlling the speed.

When a set is automatically started, its governor valve is first opened by the speed-matching unit and thus the speed rises rapidly and overshoots the correct value. The speed-matching unit then causes the valve to close and the speed returns more slowly towards the correct value, once more overshooting. When the set is brought through the correct speed at a slow enough rate, the synchronizer will be able to close the circuit breaker. This may occur after two or three "swings," depending on the governor characteristic in relation to the inertia of the set and the rapidity of control of the speed-regulating motor. It is fundamental in this type of synchronizer that it cannot operate correctly unless the speed varies up and down relative to the correct value.

The Metropolitan-Vickers Automatic Synchronizer.—This synchronizer consists essentially of three component parts: (*a*) a voltage paralleling relay, (*b*) a speed matcher, and (*c*) the synchronizing relay.

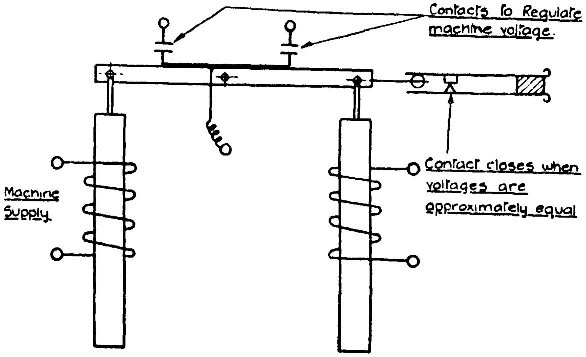

[*Metropolitan-Vickers.*

FIG. 57.

The voltage paralleling relay consists of a beam pivoted at its centre which carries two iron cores, one at each end. The arrangement is shewn in Fig. 57; one core is magnetized by a coil which is fed from the busbars, while the other coil is supplied from the incoming machine. A difference between the two voltages results in the tilting of the beam in a direction dependent upon which of the voltages is the greater. The tilting of the beam is utilized to close the appropriate contacts whereby the voltage of the incoming generator is regulated by operation of the exciter field rheostat, by means of an auxiliary motor. When the beam is horizontal, the contacts on the right of the diagram close, thereby closing the circuit of the synchronizing relay. The voltage paralleling relay is only considered necessary in such cases where the circulation of the reactive current consequent upon a difference between the busbar voltage and that of the incoming machine would reach a value likely to affect the system voltage, as, for example, would be the case if a large generator was being paralleled with a comparatively small system. In other cases, the voltage of the incoming generator is merely brought up to its normal regulated value by means of the automatic voltage regulator.

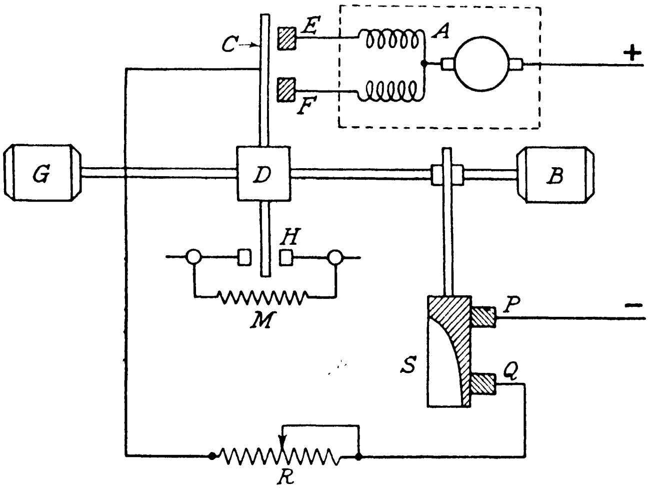

FIG. 58.

The speed-matching unit (see Fig. 58) consists of a differential, D, driven by two fractional horse-power synchronous motors, B and G, which are driven from the busbars and from the incoming machine respectively through potential transformers. The motors drive a contact arm, C, through the differential to which they are friction coupled so as to permit of the continued rotation of the motors when the contact arm has reached the end of its travel in either direction. The arm when driven in one direction or the other makes contact with E and F respectively, which causes the auxiliary speed-regulating motor A to rotate in the appropriate direction for the adjustment of the steam supply to the incoming set. In series with the speed raising and lowering contacts EF is a drum switch S, which is continuously rotated through gearing either by motor B or G. One contact finger P makes contact continuously with the metal-covered portion of the drum (shewn shaded), while the other contact finger Q makes only an intermittent contact with the metal. This latter contact can be adjusted up and down so as to vary the time of contact to suit the characteristics of the steam governor. Thus the speed-regulating motor A is operated by a series of impulses and " inches " the governor control mechanism, thereby preventing hunting. A resistor R is also included in the circuit for the purpose of adjusting the speed of motor A. An additional contact H is also provided on the differential for the purpose of either inserting or short-circuiting a resistor M, which is in the path of the synchronizing relay. The object of this device is to initiate the closing mechanism of the circuit breaker in advance of the instant when synchronism occurs, and its action will be referred to subsequently.

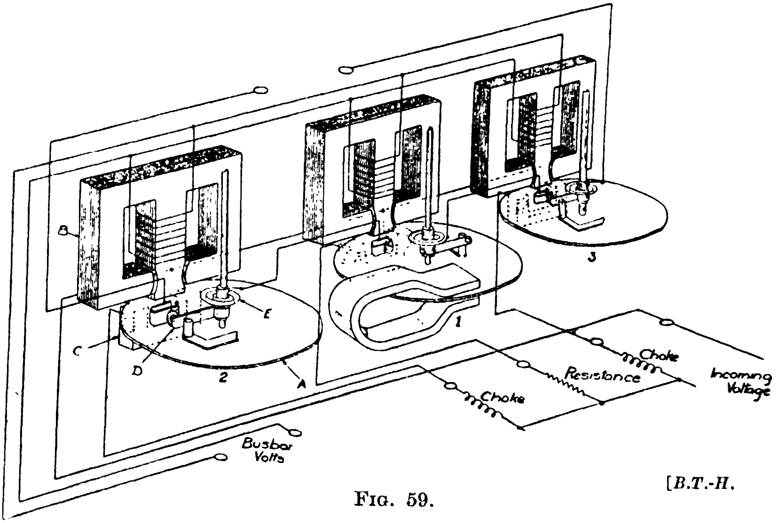

[B.T.-H.

Fig. 59.

A perspective diagram of the synchronizing relay is given in Fig. 59, from which it will be seen that the device consists of three induction type relay elements. The coils of the upper electromagnets B are connected in parallel and energized from the busbars, while the coils on electromagnets C are connected to the incoming generator, but in order to obtain the correct phase relationship between the fluxes in B and C in each relay element, an inductance is connected in series with the lower windings in the case of elements 2 and 3 and a non-inductive resistor in the case of element 1. The spring controls of elements 2 and 3 act to keep the relay contacts closed, while the spring control of element 1 keeps the contacts open, when the torque is zero. The three relay contacts are connected in series with each other and with the circuit which actuates the operating mechanism of the circuit breaker, thus the latter can only be closed when the three relay contacts are closed.

The electromagnetic torque acting on elements 2 and 3 is proportional to $E_bE_c \sin a$, where E_b and E_c represent the busbar volts and the incoming machine volts respectively and a the phase displacement between them. The voltage and flux vectors are shewn in Fig. 60(*a*); due to the inductors in series with the lower windings of these elements, the flux vector Φ_c lags behind E_c by approximately 90 degrees, and this is also the case with Φ_b and E_b. When the frequency of the incoming machine differs from the busbar frequency, the two sets of vectors are, of course, rotating at different angular velocities, but as the busbar frequency is constant, this may be regarded as a reference and in the diagram E_b may be considered as fixed in space while E_c rotates at a speed corresponding to the difference between the two frequencies. E_c is thus shewn approaching the position of phase coincidence, and since its *relative* direction of rotation is clockwise, the incoming machine frequency is low, i.e., E_c is rotating at a lower speed than E_b and is therefore slipping backwards. As E_c approaches E_b, the torque acting on elements 2 and 3 is rapidly reduced and becomes zero when the two voltages are in phase and again when they are in phase opposition. The strength of the control springs on these elements, however, is sufficient to close the contacts before the torque becomes zero and the period during which the contacts of element 2 remain closed is shewn in the shaded part of Fig. 60(*b*). The circle in this diagram represents one complete cycle, i.e., one complete revolution of the vector E_c relative to the reference vector E_b. It is thus seen that from 0 to 180 degrees when the electromagnetic torque is in an operating direction, and is thus added to the spring torque, the relay contacts remain closed, but from 180 to 360 degrees the electromagnetic torque reverses, and as soon as it is sufficiently large to overcome the opposing spring torque, the relay contacts open and remain open until the position of 360 degrees is approached, when the spring torque,

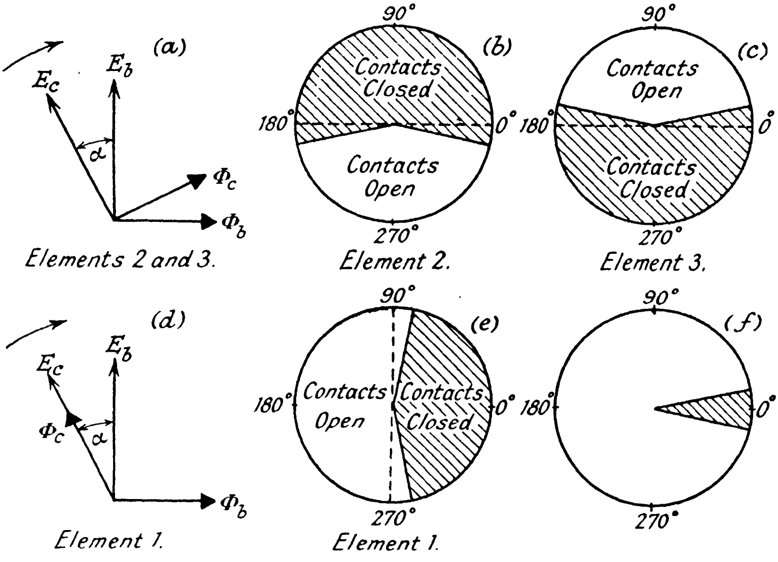

FIG. 60.

overpowering the rapidly falling electromagnetic torque, again closes the contacts.

The operation of element 3 is precisely the same as that of element 1, but since the winding on the lower electromagnet is reversed, the electromagnetic torque of this element is evidently in an operating direction from 180 to 360 degrees, and accordingly the period during which the contacts remain closed is shewn in the shaded part of Fig. 60(c).

Since the winding of the lower electromagnet of element 1 has a non-inductive resistance in series with it, the flux Φ_c set up by the voltage E_c is brought practically in phase with this vector, as shewn in Fig. 60(*d*). This element therefore experiences a torque $E_bE_c \cos \alpha$ and this torque is evidently in an operating direction from 0 to 90 degrees and again from 270 to 360 degrees (see Fig. 60(*e*)). In this element the spring torque opposes the electromagnetic operating torque so that during the period 90 to 270 degrees, when the spring and electromagnetic torques assist one another, the disc rotates in a counter-clockwise direction (Fig. 59) and is allowed to make approximately half a revolution, after which its further movement is prevented by a stop. Consequently when the electromagnetic torque is in an operating direction, the disc has to make half a revolution in a clockwise direction before the contacts can close, while its speed is controlled by a damping magnet, the pole strength of which is sufficiently large to prevent the contacts from closing unless the frequency difference is sufficiently small. Owing to inertia and also to the braking torque due to the damping magnet, the disc is restrained from moving until the frequency difference is of the order of 0·25 per cent. As this difference is reduced, the travel of the disc is correspondingly increased until the contacts close.

The period during which the contacts of all three elements are closed is indicated in Fig. 60(*f*). The function of elements 2 and 3 is, therefore, to give this common closed contact period, while the functions of element 1 are to prevent the three contacts from closing for a phase difference of 180 degrees and also to confirm the operation of elements 2 and 3 at zero phase difference when the frequency difference has been reduced to a value at which the incoming generator can be safely connected to the busbars.

The relay contacts must, of course, close in advance of the instant when the two voltages E_b and E_c are in phase, in order to make allowance for the time occupied by the operating mechanism of the circuit breaker to function. This is effected by suitably modifying the phase of the fluxes of the electromagnets B and C by the addition of two resistors, one inserted in one of the leads connecting the upper electromagnet windings to the busbars and the other in one of the leads connecting the lower windings to the incoming generator. The former resistor is shewn as M (see Fig. 58), which, as previously mentioned, may be short-circuited or inserted by the contact H. When the speed of the incoming generator is low, the voltage vector E_c, as explained above, may be regarded as rotating in a clockwise sense with respect to E_b. Under this condition, the contact H is arranged to be open, so that the resistor M is included in the circuit of the upper electromagnets. The effect of this resistance is to bring the flux vector Φ_b more into phase with the voltage E_b while the resistor in the circuit of the lower electromagnets is utilized to modify appropriately the phase angle between E_c and Φ_c. These modified conditions are represented in Fig. 61(*a*), from which

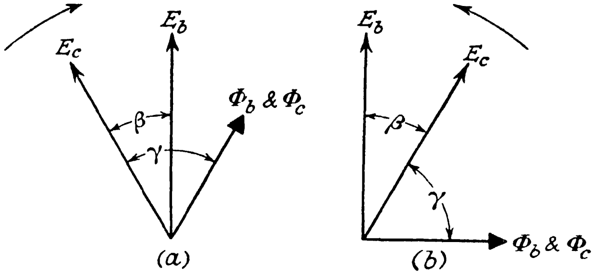

Fig. 61.

it will be seen that the angle between E_c and Φ_c is γ and that Φ_b now lags behind E_b by the angle $\gamma - \beta$, instead of by 90 degrees, so that Φ_b and Φ_c are in phase, and the torque zero, in the relay elements 2 and 3 at the instant when E_c is approaching E_b but displaced from it by the angle β. At this instant, then, the relay contacts 2 and 3 close, and since the contacts of relay 1 will already be closed (if the conditions for this element above referred to are satisfactory) the circuit breaker closing mechanism will be initiated in advance of the instant of phase coincidence by the angle β, and the breaker closed at the instant of phase coincidence. The angle β can be adjusted, of course, to different values to suit the circuit breaker characteristics by varying the ohmic values of the two resistors.

Imagine, now, the speed of the incoming machine to be too high, so that the relative direction of rotation of E_c is reversed. Fig. 61(*b*) shews the condition of E_c rotating in a counterclockwise sense and approaching E_b. In these circumstances the differential on the speed-matching unit will reverse its direction of rotation and this change in direction is utilized to close the contact H, thus short-circuiting the resistor M so that Φ_b lags behind E_b by approximately 90 degrees. Since Φ_c still lags behind E_c by the same angle, γ, Φ_b and Φ_c are again in phase, and the torque zero, in the case of relay elements 2 and 3, when there is an angle β between the two voltages. Thus, in both cases, the circuit breaker closing mechanism is initiated in advance of the instant of phase coincidence by the necessary angle.

reduced to zero. If the iron is far from saturation (the error in what follows is not great if saturation is only just approached), then the fluxes which each m.m.f. would produce if acting separately are proportional to the respective m.m.f's and the vector sum of these separate fluxes is equal to the flux produced by the vector sum of the separate m.m.f's. In these circumstances the voltage which Φ_f (and therefore F_f) acting alone would produce is represented by OE′, where OE′ is perpendicular to Φ_f and E′ is on VE produced. For, since OA is perpendicular to EE′, OB perpendicular to OE and AB perpendicular to OE′, the triangles OAB and EE′O are similar and

$$\Phi_f : \Phi_r :: OE' : OE$$

and also

$$F \ : F_r : F_s :: OE' : OE : EE'.$$

Under the ideal conditions assumed (from which practical conditions do not differ greatly unless the iron is nearly saturated), in which the separate components can be considered, the terminal voltage is arrived at in the following manner. The current in the field coils produces a magnetomotive force F_f and a flux Φ_f. This rotating flux generates a voltage OE′. There is also a rotating flux Φ_s due to the m.m.f. F_s (armature reaction), and this generates a voltage E′E. The resultant voltage generated by the *rotating flux* is the vector sum of these two, viz., OE. This is commonly termed the generated e.m.f. From this may be subtracted the "reactance drop" VE, giving the terminal voltage OV. Usage has made the term "reactive drop" permissible and there is little objection to it, if it offers verbal economy and its nature is clearly understood. Actually, in addition to the rotating flux Φ_r (made up of its components Φ_f and Φ_s) there is associated with each phase winding a simple *oscillating leakage flux,* which does not cross the airgap and contribute to the rotating flux, but generates in the winding a voltage EV. This, added to the resultant voltage OE generated by the rotating flux, gives the terminal voltage OV.

---

a light, tightly-fitting piston. The piston is loaded with 15 lbs. and it moves down 6 inches. If this weight of 15 lbs. is removed and another exactly similar weight put in its place, the piston will again move down 6 inches. But if both the weights are put in together, the movement will not be 12 inches but only 8 inches. To consider the result of each separately is meaningless. Only the effect of the mean of the causes (not the sum of the results) can be considered.

It will be evident that, neglecting the effect of saturation, the vector E′E will be in phase with the reactance voltage – IX, so that the two effects are additive, i.e., they both act to reduce the terminal voltage of the generator. For this reason they may be considered as equivalent to a single effect. Two courses are open if the separate effects of armature reaction and armature reactance are not to be treated. The leakage reactance may be assumed to be greater than it actually is, so that the reactive drop is VE′ instead of VE, and the armature reaction is assumed to be zero, this is termed the "synchronous impedance method." On the other hand, the leakage reactance may be assumed to be zero and the voltage E′V is assumed to be entirely due to an artificially increased flux Φ_s of armature reaction; this is termed the "ampere-turn method." So long as the iron is far from saturated, both methods will give practically identical results in determining the regulation on *slow* changes of load. Differences occur when the iron approaches saturation. That this is so is readily seen. The leakage flux has a much longer air path than the airgap flux. For this reason EV is almost strictly proportional to the load current. But Φ_s (and therefore E′E) does not increase as rapidly as the load current as the iron approaches saturation. The synchronous impedance method assumes a linear relationship throughout and the ampere-turn method assumes a curved characteristic of the same nature for both components of E′V. A really close determination of the regulation on slow changes of load cannot be made without taking into account the two separate components. It is, however, on rapid changes of load that the different natures of the two components become obvious.

If the power factor of the load is zero, the voltage vectors of Fig. 63 collapse into a line and the m.m.f. vectors into another line perpendicular to the voltage vectors. This is shewn in Fig. 64, from which it will be seen that F_s is now in direct opposition to F_f and thus the effect of armature reaction is directly to demagnetize the airgap, thereby reducing the generated e.m.f. It is also evident that the reactance voltage, – IX, is directly subtracted from the generated e.m.f. OE. Imagine now the terminals of the generator to be short-circuited suddenly. The stator current rises to a value which is limited by the leakage reactance of the machine, the actual magnitude being $\frac{E}{X}$, where E and X are, of course, the generated e.m.f. and reactance per phase respectively. The increase of stator current causes a corresponding increase in F_s and this m.m.f. directly opposes that due to the field (see Fig. 64) since, owing to the high ratio of reactance to resistance of the stator windings, the power factor of the short-circuit current is sensibly zero. This increase in stator m.m.f. cannot, however, result in an instantaneous decrease in the airgap flux because any decrease in the latter will, by Lenz's law, induce an e.m.f. in the field winding which will act largely to increase the field m.m.f., and in addition, due to the large time constant $\frac{L}{R}$ of the field winding, an appreciable time will be necessary before the change in the airgap flux can be completed. Thus it will be evident that when a short-circuit occurs, the current will rise practically instantaneously to a peak value after which the stator m.m.f. will proceed gradually to demagnetize the airgap, thus reducing the generator voltage OE and the short-circuit current.

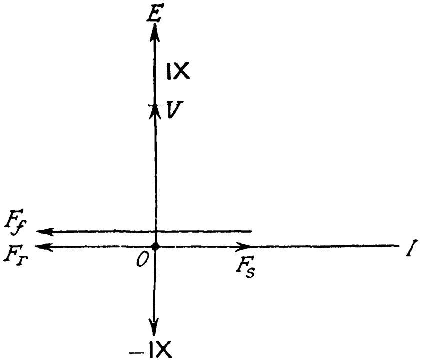

FIG. 64.

In high-speed generators, the number of turns per pair of slots is relatively low, and since the inductance is proportional to the *square* of the turns per slot pair, the reactance tends to be low; for this reason the radial length of the airgap is made relatively large and closed or semi-enclosed slots are employed. If the leakage reactance is to be high, the leakage flux must be given a path of low reluctance. Deep closed slots and long airgaps both tend to increase the leakage flux whose entrance into the rotor is delayed by the eddy currents which are set up in the solid metal or in the amortisseur windings. Again, it will be evident that if magnetic saturation can occur in the stator teeth, the reactance under the condition of short-circuit may be considerably less than the reactance which is effective under normal operating conditions.

The form of curve relating short-circuit current with time is shewn in Fig. 65. It is assumed that with full-load excitation the current at the instant of short-circuit rises to ten times its full-load value, limited only by the leakage or "transient" reactance, and then decreases as armature reaction becomes progressively effective, to a final value equal to three times full-load value at which the stator m.m.f. has reduced the airgap flux to its final value. Consequently the permanent value of the short-circuit current I_p has now been reached. The line marked "transient A.C. component" is obtained by deducting the value of I_p from the peaks of the curve, and its height at any point gives an indication of the effectiveness of the armature reaction at that point. The amplitude of this component decreases to zero, and this reduction is called the decrement. On short-circuit the stator current rises at an extremely rapid rate, the rate being limited only by the leakage inductance of the stator. The large stator current provides

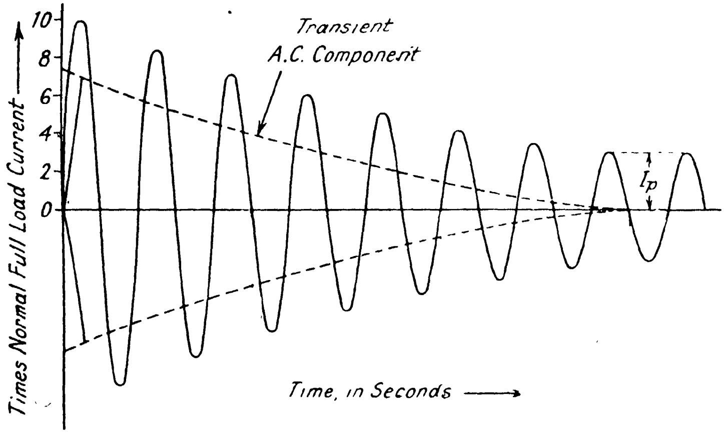

FIG. 65.

a magnetomotive force tending to wipe out the airgap flux, since the stator current lags by 90 degrees behind the voltage. But the airgap flux cannot change extremely rapidly. In changing it generates (by Lenz's law) an e.m.f. in the pole faces and, more particularly, in the rotor winding, so providing a magnetomotive force tending to *maintain* the airgap flux. Slowly this maintaining m.m.f. falls as the increase in the exciting current, and the eddy currents in the pole faces, die out. When stable conditions are reached, the airgap flux is low and the short-circuit current correspondingly low.

It should be understood that the energy in the short-circuit does not come from the prime mover but mainly from the stored magnetic energy, i.e., from the excitation system. In the case of short-circuit testing plants, this energy is usually supplied from the stored rotational energy of the generating set. Turbo-generators tend to overspeed during short-circuits as the load, which was absorbing energy, is short-circuited, and consequently the generator output falls to a smaller value despite the great increase in stator current.

In the above discussion, a symmetrical three-phase short-circuit has been assumed which, as has been seen, implies a rotating vector which is at rest relative to the field.

Asymmetrical Short-Circuit Current.—In Fig. 65 the current wave is shewn symmetrical about the time axis, but this is true only if the short-circuit occurs at the instant when the generated e.m.f. is passing through its maximum value, assuming the power factor to be zero. If the short-circuit occurs at the instant when the voltage is zero, the current will rise to a value which approaches twice the instantaneous short-circuit current, assuming the power factor to be low. This phenomenon is known as the " doubling effect " and the full effect occurs only in the case of a completely inductive circuit, i.e., a circuit which contains no resistance. The mechanism of the doubling effect can be explained physically by a reference to Fig. 66(*a*). When the short-circuit is initiated at the voltage zero, the current commences to rise as the voltage rises, but slowly, due to the inductance. The current continues to rise, however, after the voltage has passed through its maximum value because the voltage is still acting in the same direction. Since, however, the voltage is decreasing, the rate of rise of the current diminishes after the first quarter of the cycle and falls to zero when the voltage wave passes through zero at the completion of the half-cycle, this instant coinciding with the maximum value of the current. Since there is no resistance, there can be no decrement and the displacement of the current will thus continue in every successive cycle. It will be clear that the voltage equation will be :

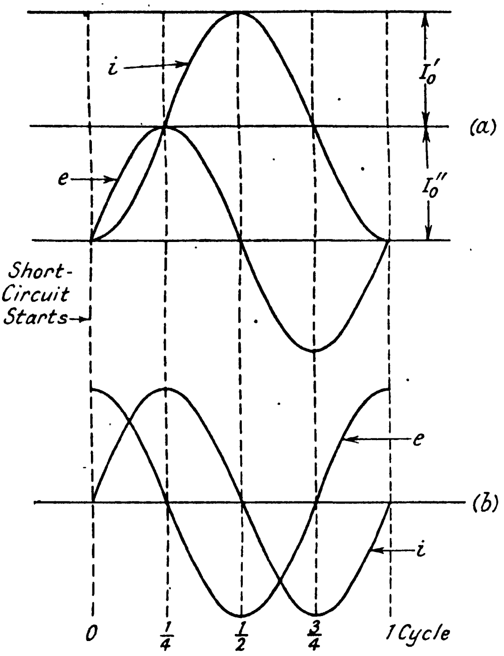

FIG. 66.

$$L\frac{di}{dt} = e$$

$$\int L\ di = \int e.dt$$

$$\int di = i = \frac{1}{L}\int e.dt$$

$$\text{Let } e = E_m \sin \omega t \quad . \quad . \quad . \quad . \quad (1)$$

$$\int e.dt = -\frac{E_m}{\omega}\cos\ \omega t + K$$

$$\therefore i = -\frac{E_m}{L\omega} \cos \omega t + K' \quad . \quad . \quad (2)$$

If e is zero, it will be evident from (1) that sin ωt must be zero and thus t is zero, so that if i is also zero when t is zero, cos $\omega t = 1$ and the integration constant $K' = \frac{E_m}{L\omega}$. Substituting this value in (2) gives:

$$i = \frac{E_m}{L\omega}(1 - \cos \omega t)$$

The maximum value of this expression is thus $2\frac{E_m}{L\omega}$, so that the short circuit current rises to double its symmetrical peak value. The current wave (see Fig. 66(*a*)) may be regarded as consisting of an A.C. component having a peak value of I_0' which is symmetrical about the time axis and a D.C. component having a constant value of I_0'', this D.C. component raising the A.C. component until it is completely above the time axis touching the latter only once per cycle, thus doubling the peak value of I_0' as shewn.

It will be seen from Fig. 66(*b*) that if the short-circuit is initiated when the voltage is passing through its maximum value, i is zero when ωt is 90 degrees. Thus from (2) $K' = O$ and the maximum value of the short-circuit current is $\frac{E_m}{L\omega}$. Thus the D.C. component is absent and the current wave will be symmetrical about the time axis. It will thus be evident that if a short-circuit is initiated at the instant when the generator voltage is passing through its zero point, the maximum asymmetrical value of the transient short-circuit current will occur. If, however, the short-circuit occurs at any instant other than those corresponding to maximum and zero voltages, an asymmetrical transient of smaller amplitude will take place. This, of course, assumes the power factor to be zero.

Taking now into account the resistance of the circuit, the equation will be:

$$L\frac{di}{dt} + Ri = e = E_m \sin \omega t.$$

The general form of the solution of this equation is :

$$i = \mathrm{K}\varepsilon^{-\frac{\mathrm{R}}{\mathrm{L}}t} + \frac{\mathrm{E}_m}{\mathrm{R}^2 + \mathrm{L}^2\omega^2}(\mathrm{R} \sin \omega t - \mathrm{L}\omega \cos \omega t)$$

$$= \mathrm{K}\varepsilon^{-\frac{\mathrm{R}}{\mathrm{L}}t} + \frac{\mathrm{E}_m}{\sqrt{\mathrm{R}^2 + \mathrm{L}^2\omega^2}}\left(\frac{\mathrm{R}}{\sqrt{\mathrm{R}^2 + \mathrm{L}^2\omega^2}} \sin \omega t - \frac{\mathrm{L}\omega}{\sqrt{\mathrm{R}^2 + \mathrm{L}^2\omega^2}} \cos \omega t\right)$$

writing $\cos \alpha$ for $\dfrac{\mathrm{R}}{\sqrt{\mathrm{R}^2 + \mathrm{L}^2\omega^2}}$

and $\sin \alpha$ for $\dfrac{\mathrm{L}\omega}{\sqrt{\mathrm{R}^2 + \mathrm{L}^2\omega^2}}$

and substituting,

$$i = \mathrm{K}\varepsilon^{-\frac{\mathrm{R}}{\mathrm{L}}t} + \frac{\mathrm{E}_m}{\sqrt{\mathrm{R}^2 + \mathrm{L}^2\omega^2}}(\cos \alpha \sin \omega t - \sin \alpha \cos \omega t)$$

$$= \mathrm{K}\varepsilon^{-\frac{\mathrm{R}}{\mathrm{L}}t} + \frac{\mathrm{E}_m}{\sqrt{\mathrm{R}^2 + \mathrm{L}^2\omega^2}} \sin \overline{\omega t - \alpha}.$$

Inserting the initial conditions, $i = 0$ when $t = 0$.

$$i = 0 = \mathrm{K} + \frac{\mathrm{E}_m}{\sqrt{\mathrm{R}^2 + \mathrm{L}^2\omega^2}} \sin(-\alpha)$$

$$\therefore \mathrm{K} = \frac{\mathrm{E}_m}{\sqrt{\mathrm{R}^2 + \mathrm{L}^2\omega^2}} \sin \alpha.$$

Substituting back, we have,

$$i = \frac{\mathrm{E}_m}{\sqrt{\mathrm{R}^2 + \mathrm{L}^2\omega^2}} \sin \alpha\, \varepsilon^{-\frac{\mathrm{R}}{\mathrm{L}}t} + \frac{\mathrm{E}_m}{\sqrt{\mathrm{R}^2 + \mathrm{L}^2\omega^2}} \sin \overline{\omega t - \alpha}$$

$$= \frac{\mathrm{E}_m}{\mathrm{Z}}\left[\varepsilon^{-\frac{\mathrm{R}}{\mathrm{L}}t} \sin \alpha + \sin \overline{\omega t - \alpha}\right]$$

$$= \mathrm{I}_m\varepsilon^{-\frac{\mathrm{R}}{\mathrm{L}}t} \sin \alpha + \mathrm{I}_m \sin \overline{\omega t - \alpha}$$

where $\mathrm{Z} = \sqrt{\mathrm{R}^2 + \mathrm{L}^2\omega^2}$.

This equation shews that the ratio of the asymmetrical component to the maximum ordinate of the symmetrical component is $\varepsilon^{-\frac{\mathrm{R}}{\mathrm{L}}t} \sin \alpha$, where $\cos \alpha$ is the power factor of the circuit. The form of the wave relating to the equation is given in Fig. 67, and this should be compared with Fig. 66. Comparing Fig. 67 with Fig. 66(*b*), it will be seen that if the

CHAPTER VI

CIRCUIT BREAKERS AND CIRCUIT INTERRUPTION

Requirements of Circuit Breakers.—The requirements of a circuit breaker are that it shall carry its normal current continuously without overheating of its contacts ; that it shall make and break abnormal currents up to the value specified by the makers and that it shall successfully withstand the stresses which arise consequent upon these duties from the electrical, mechanical and thermal viewpoints. While the first requirement presents no difficulties to designers, the second, and by inference the third, present problems of a major character, some of which have not yet been fully solved. Since, therefore, these requirements are so much more difficult of fulfilment than the first mentioned, circuit breakers are rated in terms of the current which they are capable of interrupting at the stated voltage. Conventionally, the product of the rated interrupting current and the service voltage $\times 10^{-6}$, i.e., the MVA, is used as a measure of size, though this is now regarded as a loose method.

Historical Development.—As soon as high voltages began to be employed in electricity supply, difficulty was experienced in breaking circuits. At an early date the device was adopted of making the actual break occur under oil. This soon led to the enclosure of the breaker entirely in an oil tank which at first was of thin pressed steel. As the amount of power to be dealt with increased, failures of circuit breakers became common and, notably in America, tests were made in networks so as to prove designs in service. These shewed that the pressure rise due to the oil piston effect contributed largely to the extinction of the arc. This knowledge led to the use of thick boiler plate for the construction of strong tanks of circular shape with cast-steel domed top plates. The speed of the circuit breaker cross-bar, which carries the contacts, was increased by strengthening the throw-off springs. Later the use of explosion pots, which constricted the issue of arc gas until contact separation had occurred, became general. An alternative to the explosion pot principle was the multi-break circuit breaker with plain contacts ; in this type the arc was drawn to a considerable total length in several separate gaps in series. Orthodox design has, however, been stabilized for many years on the lines of a double break, produced by the movement of an insulated cross-bar within a large tank of oil. These breakers were closed usually by solenoids and opened by springs which were held in by some form of toggle mechanism which was operated by means of a trip coil. Pneumatic operation is now coming into general use even where air is not employed as the arc extinguishing medium.

In recent years, in an effort to reduce the quantity of oil employed, single-break designs have been evolved (so-called " oil-poor " breakers). Compressed air is also being increasingly employed as the arc extinguishing medium, especially on the European continent, and by a few makers water is used for this purpose. It may be mentioned that the oil-poor breaker is by no means new ; it has existed for many years in the form of the American General Electric Company's " H " type breaker, made in this country by the British Thomson-Houston Co. This type is illustrated in Figs. 101 and 102 and has been very widely used.

The evolution of new types of circuit breakers and the improvement of existing ones has been very rapid in recent years since the experience gained on high capacity circuit-breaker test plants became available. Up to the year 1932 there was no circuit breaker test plant in this country. All designs were accordingly based on empirical considerations guided by occasional tests, in some cases on plants in other countries. The effect of placing design on a sound basis, due to the availability of large test plants, has been very marked ; previous ratings have in many cases been drastically reduced and improvements have rapidly been made in details. Fundamental changes in design are now beginning to appear, and it seems probable that a revolution in circuit-breaking technique is about to be witnessed.

It will be obvious that the most important feature, the circuit breaker itself, does not constitute the whole of the switchgear. There are the busbars, the selectors and the isolating switches, and current- and potential transformers to consider. Originally these were usually accommodated in cell-work cubicles with the copper work supported on insulators. This method of construction led to troubles with vermin and necessitated the cleaning of insulators, etc., besides requiring considerable space. Iron-clad gear, a design peculiar to England, as shewn in Fig. 106, was evolved to overcome these difficulties. In this type of switchgear there are no exposed insulators, the busbars are enclosed in oil or compound and the selecting and isolating switches, if any, are oil-immersed and isolation is generally performed by racking out or dropping down the breaker which is thus withdrawn from spout insulators. In later adaptations, the isolation takes place under oil by lifting the breaker (cf. the Metropolitan-Vickers gear shewn in Fig. 110). The two great virtues of iron-clad gear are the phase isolation feature, which virtually prevents phase-to-phase faults, and the ease of interlocking against inadmissible operations. By making all breakdowns occur as earth faults, their severity can be reduced by the insertion of a neutral point earthing resistor and, in addition, their isolation by means of very fast-acting relay systems is made possible. A high degree of interlocking is desirable to protect both the personnel and the system against inadvertent lapses to which the best operator is liable, especially in times of stress. Such interlocks protect against opening the doors of live cubicles, against breaking a circuit on the isolating switches before the circuit breaker has been opened and against earthing a live circuit. These precautions are now demanded by Home Office regulations on any type of gear.

Fundamental Principles of Arc Extinction.—The mechanism of arc extinction will now be considered briefly. At the instant when the contacts of the circuit breaker separate, the contact area is rapidly reduced, resulting in an increase of current density and a local rise of temperature. The heat thus generated is sufficient to vaporize a small quantity of oil between the contacts and to ionize the vapour bubble thereby formed.* Actual separation of the contact electrodes results in a potential gradient sufficiently high to initiate an arc in the ionized gap which is conducting, since, due to the heated electrodes, there will be a large number of free electrons present in addition to the positive and negative ions. A continual generation of ions takes place due to emission from the heated electrodes, and free electrons are being continuously produced by collision with the ions. The movement of these

---

* An oil circuit breaker is here assumed. The air-blast breaker, which has now reached a position of first-class importance in Great Britain, is treated in the following chapter.

electrons under the accelerating potential represents the arc current, since when the voltage rises cyclically, the potential gradient and electron velocity increase, increasing the chances of electron and ion collision, and thus the current. When the contact potential difference decreases, the rate at which the electrons re-combine with the positive ions increases, due to their decreasing velocity. It will ~~thus be evident that the~~ causes tending to maintain the gap ionization are heat and potential, and opposing these are the de-ionizing forces which include the cooling of the gas by the surrounding oil and the physical removal of the ionized gas by ~~turbulence or~~ by deliberate means, the re-combination of the electrons and ions, and the dispersion of the electrons from the gas into the oil.

The voltage across the arc is given approximately by an equation of the form

$$e_a = b + \frac{cl}{\sqrt{i}}$$

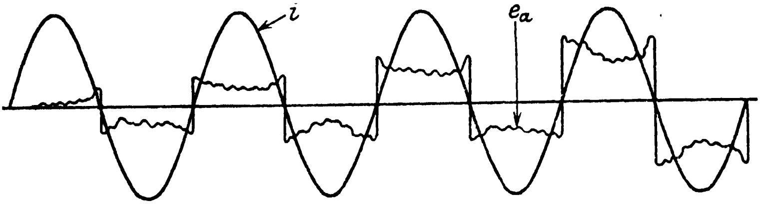

FIG. 75.

where b and c are constants, i is the current corresponding to the arc voltage e_a and l is the arc length. It will be evident from the equation that the volt-ampere characteristic of the arc will be negative so that the arc voltage will be high when the current is low and *vice-versa*. This is, of course, a well-known property of arcs. Fig. 75 shews the general form of the voltage wave and it will be seen that the voltage is more or less constant during the time when the current is near its maximum value ; the ripples on the wave being due to various disturbing effects. The characteristic peaks occur both when the current rises from and falls to zero and are due to the negative volt-ampere characteristic. Fig. 75 is only intended to give a general idea of the arc voltage wave form, since it will be evident that external effects may operate to modify the wave form considerably. Of course, as shewn in the figure, the actual magnitude of the arc voltage increases in each successive current loop, since the contacts of the circuit breaker are assumed to be separating, thereby increasing the arc length and therefore the voltage.

Final extinction of the arc requires a rapid increase of the dielectric strength ~~in the medium between~~ the switch contacts, and this is achieved either by the de-ionization of the ~~arc~~ path or by the replacement of the gas bubble ~~by cool fresh~~ oil. Modern circuit breakers are designed in such a manner as to facilitate one or both of these requirements. It will be evident that the problems of alternating-current circuit interruption are not associated with the breaking of the current since a breaker does not, *per se*, interrupt the current, the latter itself ceases to flow when it passes through its zero value. The real problem is to prevent the arc from re-striking when the potential difference across the circuit breaker contacts begins to rise after the current has vanished. ~~At this instant, it may~~ be considered that a race begins between the rate of increase of dielectric ~~strength of the arc path and the rate~~ of ~~rise of~~ the voltage tending to restrike the arc.

Recovery Voltage.—The recovery voltage is the normal frequency R.M.S. voltage that reappears between the poles of a circuit breaker after final arc extinction has occurred. When

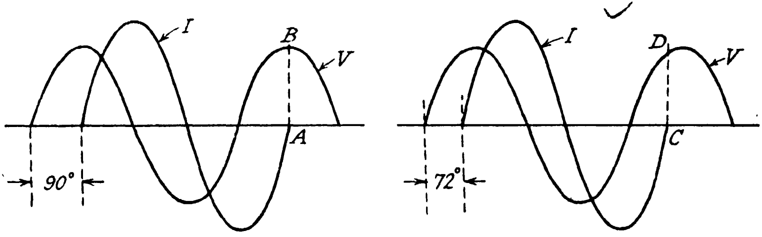

cos φ = Zero
(a)

cos φ = 0·3
(b)

FIG. 76.

a short-circuit has finally been interrupted, the normal service voltage tends to be re-established between the contacts of the circuit breaker. This voltage is that generated in the windings of the machine which supplies the circuit, but the voltage may be less than the normal value due to demagnetization of the generator airgap by the short-circuit current as explained in the preceding chapter. The instantaneous value of the recovery voltage at the instant of arc extinction is known as the "active recovery voltage," and this has an important effect upon the magnitude of the voltage responsible for re-striking the arc. The active recovery voltage depends both upon the power factor and the amount of asymmetry in the short-circuit current wave. Referring to Fig. 76(*a*), which shews the symmetrical current conditions, it will be seen that at zero power factor, lag or lead, the active recovery voltage, which occurs at zero current, is AB and this is a maximum, while Fig. 76(*b*) shews the condition for a power factor of 0·3 lagging when the active recovery voltage is CD and equal to $V_m \sin 72°$ or 95 per cent of V_m.

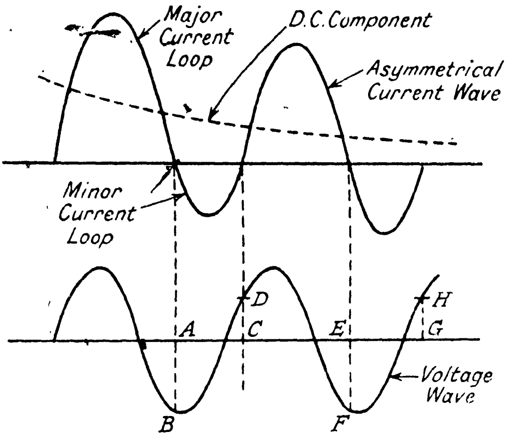

FIG. 77.

When, therefore, the ratio of reactance to resistance is high, which will be the case when a short-circuit occurs on a feeder close to the busbars, the active recovery voltage will be high while if a considerable value of resistance is included in the path of the short-circuit current, as would be the case if the short-circuit occurred at a point in the network remote from the power station, the power factor would be higher, hence the active recovery voltage would be correspondingly lower. Turning now to the effect of current asymmetry upon the recovery voltage, Fig. 77 shews the current and voltage waves drawn for a power factor of 0·3, and it will be noticed therefrom that at the end of each major current loop zero current coincides with the active recovery voltages such as AB and EF, while at the end of each minor current loop the active recovery voltages are CD and GH. Thus in the former case, zero current is accompanied by approximately maximum values of active recovery voltages, the reason being that the effects of current asymmetry and departure from zero power factor tend to cancel one another. In the latter case, these effects are cumulative and thus the active recovery voltages are reduced in consequence. It will be evident that, if the D.C. component of the current, that is, the asymmetry, is large, these effects will be greatly accentuated. Assuming a power factor of 0·3 lagging and a D.C. component equal to 20 per cent of the A.C. component, the active recovery voltage will be 99·4 per cent of the maximum if the arc is extinguished at the end of a major current loop and 87·5 per cent of the maximum if the arc is extinguished at the end of a minor current loop. It will thus be evident that, provided these values of power factor and D.C. component are not exceeded, the active recovery voltage will always have a value approaching the maximum value of the recovery voltage wave.

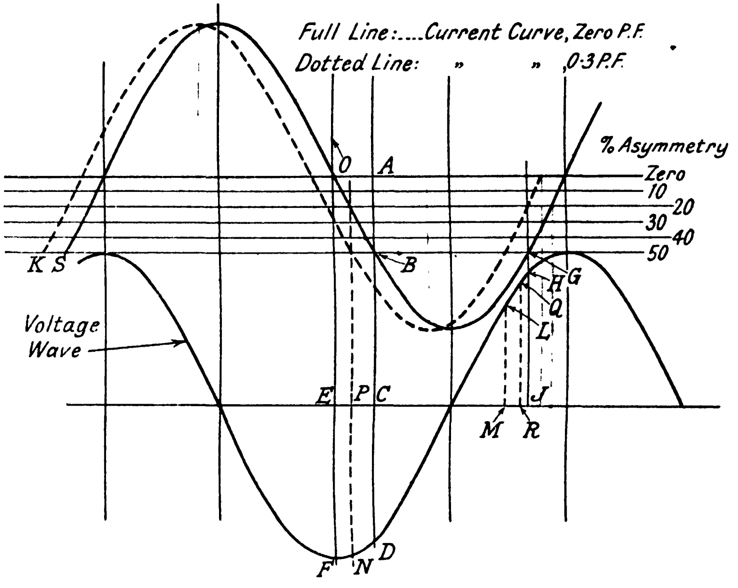

FIG. 78.

The actual value of the recovery voltage corresponding to any percentage of current asymmetry and any power factor may be easily calculated. Referring to Fig. 78, take the case of zero power factor and 50 per cent current asymmetry. Curve SBG represents a sine wave which is symmetrical about the horizontal line marked zero asymmetry. Curves corresponding to 10, 20, 30, 40 and 50 per cent asymmetry are obtained by the simple expedient of displacing the zero line downwards as shewn. Referring to the 50 per cent asymmetry line, it will be seen that 50 per cent current asymmetry will correspond to an advance in the phase of the current equal to OA or 30 degrees since $\sin 30^\circ = 0{\cdot}5$. Consequently the voltage at the end of a major current loop (i.e., at B on the current curve) is represented by CD on the voltage curve which is EF $\cos 30^\circ$ or 86·6 per cent of the maximum voltage. Similarly at the end of a minor current loop (i.e., point G on the current curve), the voltage is represented by HJ, again 86·6 per cent of the maximum voltage. Again, 20 per cent of asymmetry corresponds to an angle of advance of 11° 32′ or 98·3 per cent of the maximum voltage or PN. In the case of zero power factor, the voltages at the end of major and minor current loops are the same, and equal to the cosine of the angle of advance, such as OA (see Fig. 78) as compared with zero asymmetry. In the case of power factors other than zero, however, the voltages at the end of major and minor current loops will be different since the current wave will be advanced in phase with respect to the condition of zero power factor by an angle corresponding to the power factor. For example, the dotted curve represents a power factor of 0·3. The angle of advance is $90^\circ - \operatorname{arc\,cos} 0{\cdot}3 = 90^\circ - 72^\circ\ 33' = 17^\circ\ 27' =$ KS, and the voltage at the end of a major current loop corresponding to 50 per cent asymmetry is $\mathrm{PN} = \cos \overline{30^\circ - 17^\circ\ 27'} = \cos 12^\circ\ 33' = 0{\cdot}9761$ of the maximum. Similarly the voltage at the end of a minor current loop is $\mathrm{LM} = \cos \overline{30^\circ + 17^\circ\ 27'} = \cos 47^\circ\ 27' = 0{\cdot}6763$ of the maximum. Proceeding in the same way, the active recovery voltage can be calculated for any power factor and for any current asymmetry. It will be seen that with a power factor of 0·3 and 30 per cent asymmetry, the voltage is a maximum or EF at the end of a major loop and QR at the end of a minor loop. Thus it will be evident, as previously stated, that the effects of asymmetry and power factor tend to cancel one another in the former

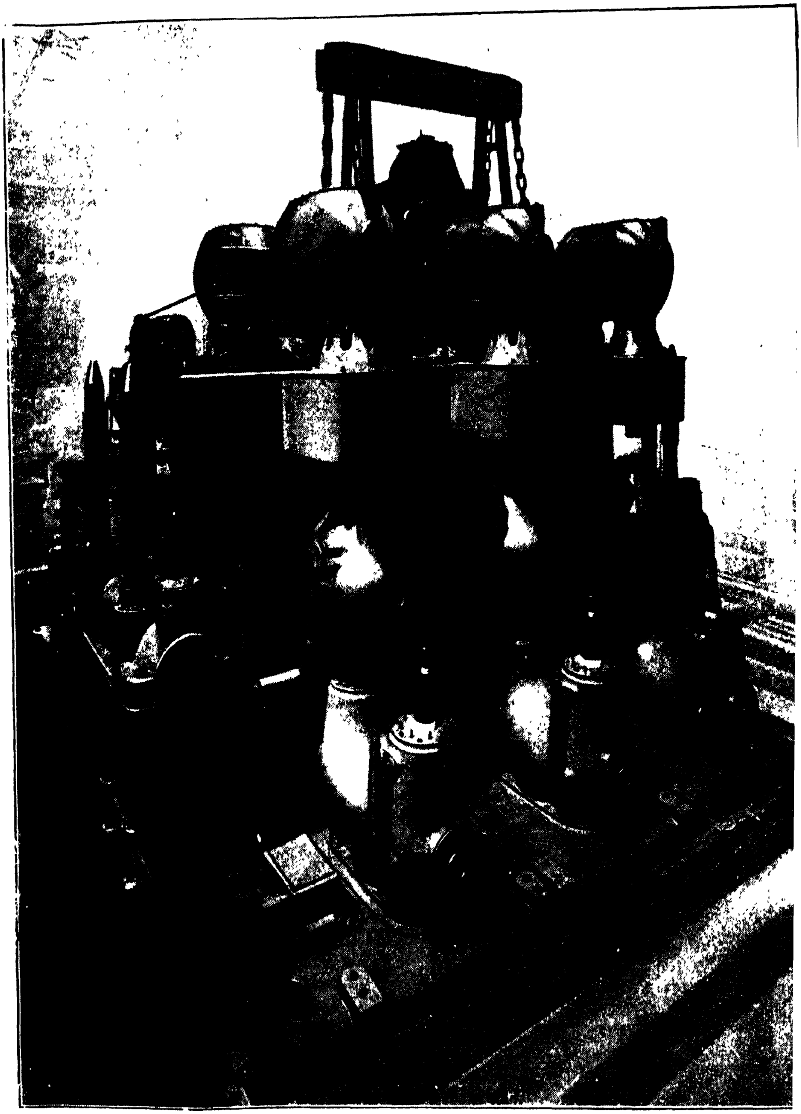

[*Metropolitan-Vick*

FIG. 110.

[*To face page*

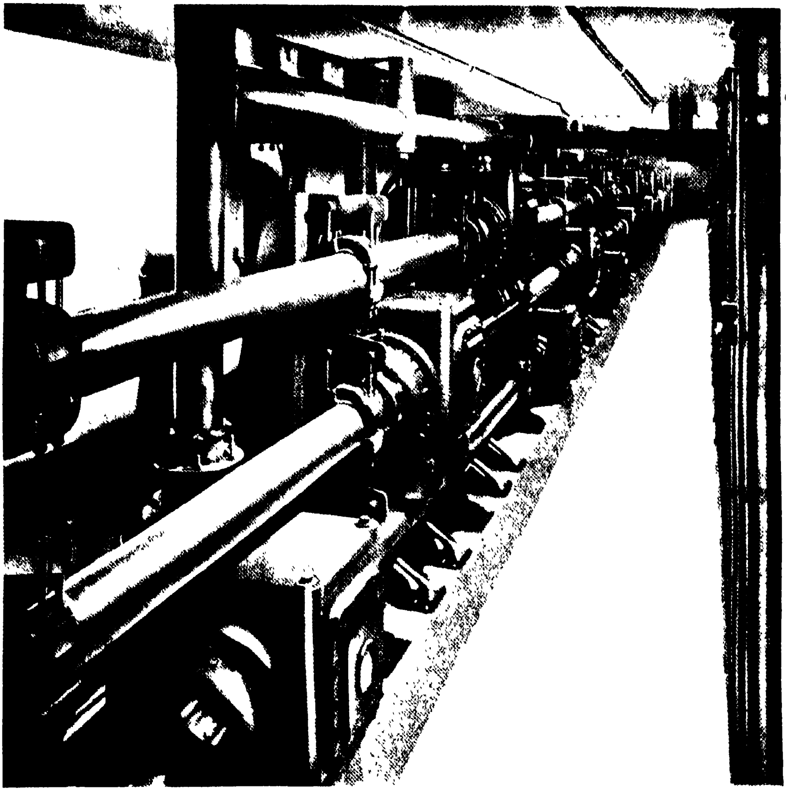

[*Metropolitan-Vickers.*

FIG. 111.

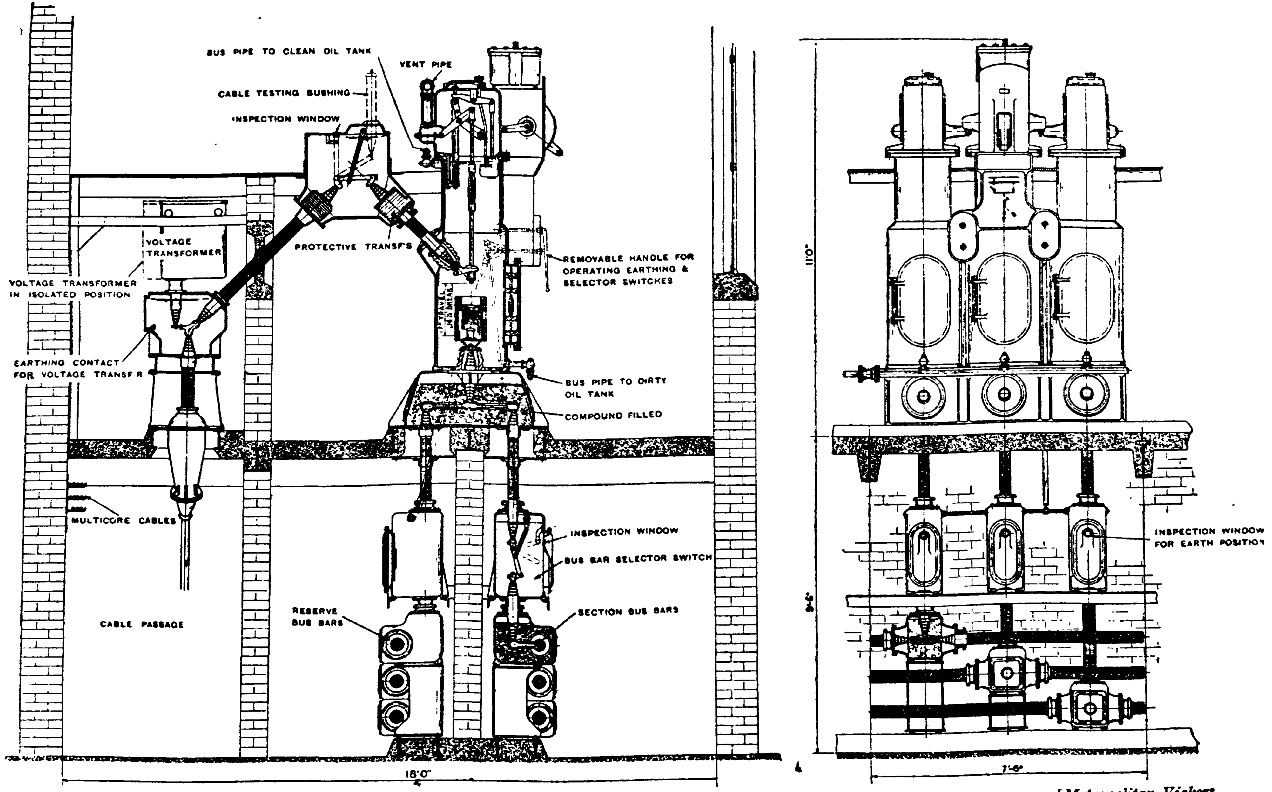

Dimensions are

[*Metropolitan-Vickers*

will be seen that the duplicate busbars which are of the condenser type are, together with their selector switches, separated by a fireproof wall, and the circuit breaker itself is similarly segregated from the feeder cable and voltage transformer compartment. Each voltage transformer tank is provided with rollers, enabling the tank to be moved to the isolated position when the high voltage terminal is connected to the earthing contact, as shewn in the diagram. Provision for current transformers is made on the bushing between the circuit breaker and the cable isolating switch, the current transformers being accommodated over an earthed metal sheath on the bushing. A permanent bus-pipe for draining the circuit breaker tanks, and another for refilling are connected to corresponding storage tanks. By lifting a hinged cover on the top of the cable isolating switch compartment, a cable testing bushing can be inserted. This makes contact with the isolating switch blade when the latter is disconnected from the circuit breaker. Thus cable testing with high voltage direct current can be carried out by this means.

Fig. 113 shews a further example of 1,500-MVA metal-clad gear, and Fig. 114 shews a section through one unit. The gear is designed primarily for single busbar working and is of the horizontal draw-out type. With these exceptions and other variations in design which will be obvious from a comparison, the description relating to Fig. 112 will apply generally to this latter gear. It will be seen from Fig. 114 that the cable entry is at the bottom right-hand side, and above the cable box is located the current transformer chamber. Over the latter are the busbar chambers. The voltage transformer is at the bottom left-hand side. It will be noticed that inspection doors are provided which give direct access to the self-compensated explosion pot and contacts. These doors can be seen in Fig. 113.

Fig. 115 shews an example of metal-clad gear for 66 kV and 1,500 MVA breaking capacity which embodies some unusual features. In this gear, as in that of Fig. 112, the circuit breakers are not physically removable and thus isolators are necessary. The scheme, however, has an important advantage over the draw-out type since the number of insulators can be reduced to a minimum due to the possibility of making the current path through the gear into a straight line. A reference to the diagram shews that this simplification has been adopted.

[B.T.-H.

FIG. 113.

[To face page 176.

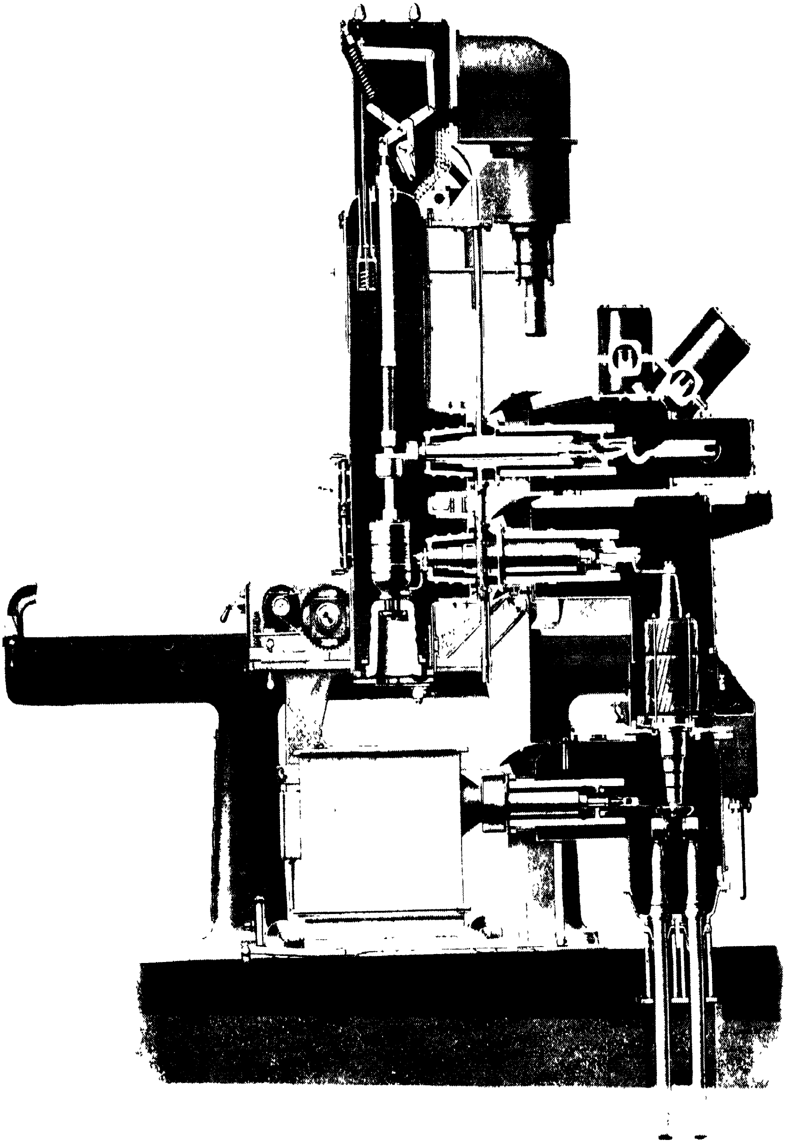

[B.T.-II.

Fig. 114.

The circuit breaker is opened and closed by what is termed "pneumo-oil" operation. The three moving contact rods are

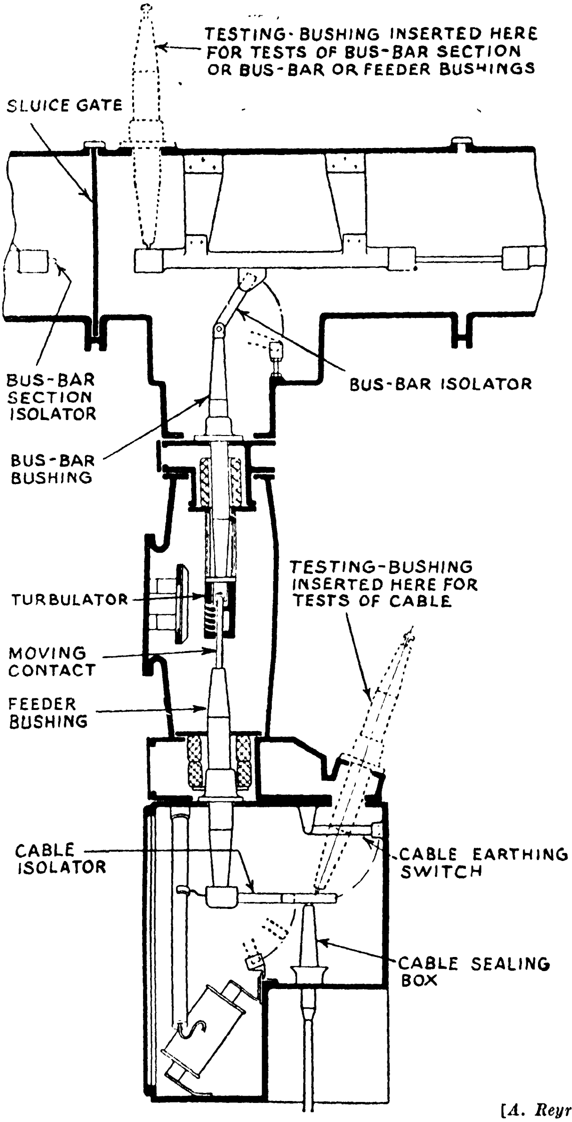

[*A. Reyrolle and Co.*

FIG. 115.

fitted with pistons (Fig. 116), housed in the feeder bushings, and these are operated by columns of oil which in turn are actuated by pneumatically operated pistons. Thus it will be seen that the only moving part is the metal rod whose function it is to connect the upper and lower fixed contacts. Due to the low inertia, very high operating speeds are achieved, with the result that the arc duration is of the order of 0·5 to 2·5 cycles. The voltage transformer is shewn in the bottom left-hand of the diagram. A means for the insertion of testing bushings is provided, both for the busbars and for the cable. Access to the arc control device (turbulator) is obtained by removing the cover in front of it. Current transformers are accommodated on both feeder and busbar bushings.

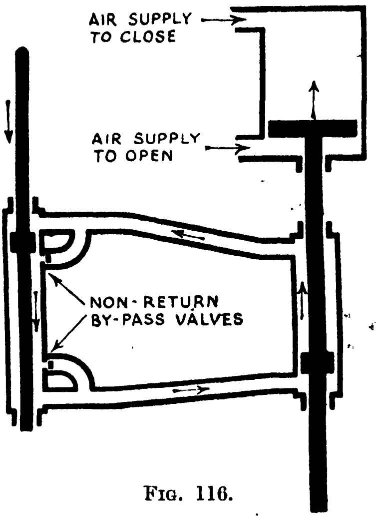

Fig. 116.

[*A. Reyrolle and Co.*

It will be seen from Fig. 115 that isolators are provided for the purpose of isolating the busbar sections. When a busbar section has been isolated, oil-tight sluice gates are dropped, when the oil can be drained from the busbar enclosure and the latter can then be physically removed for maintenance. Thus every section of the busbars can be separately pressure tested and, if found defective, can be removed and replaced without de-energizing or disturbing the remainder of the switchgear installation. The scheme therefore provides for maximum flexibility. Fig. 117 shews a photograph of the gear, and the references thereon will enable the various components to be identified with those in the cross-section of Fig. 115.

While the 66-kV gear is completely oil-filled, the 33-kV switchgear of this type employs compressed incombustible gas for insulation purposes, oil being used only in the circuit-breaker enclosure, in the circuit-breaker and voltage transformer orifices, and for the pneumo-oil operating system.

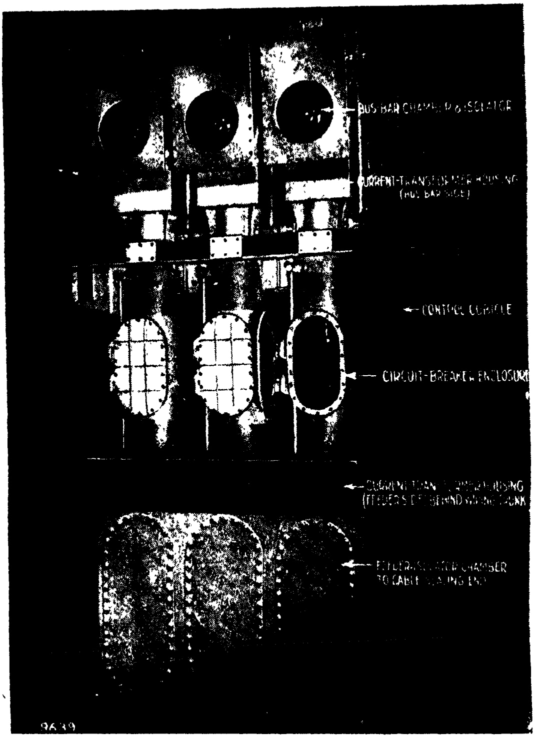

[*A. Reyrolle & Co.*

FIG. 117.

[*To face page* 178.

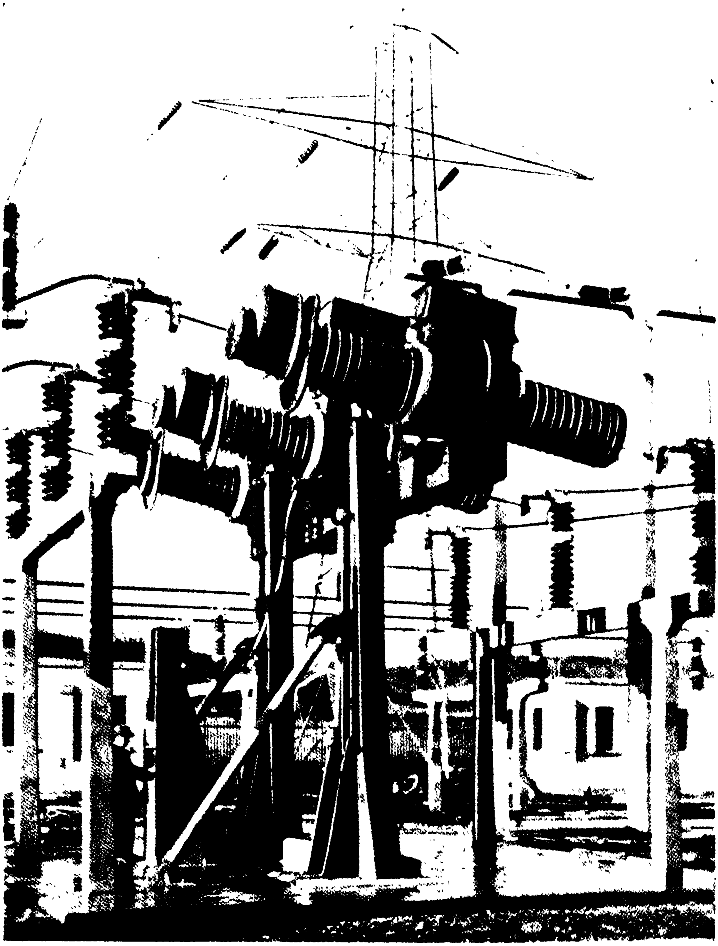

[*Metropolitan-Vickers.*

FIG. 120.

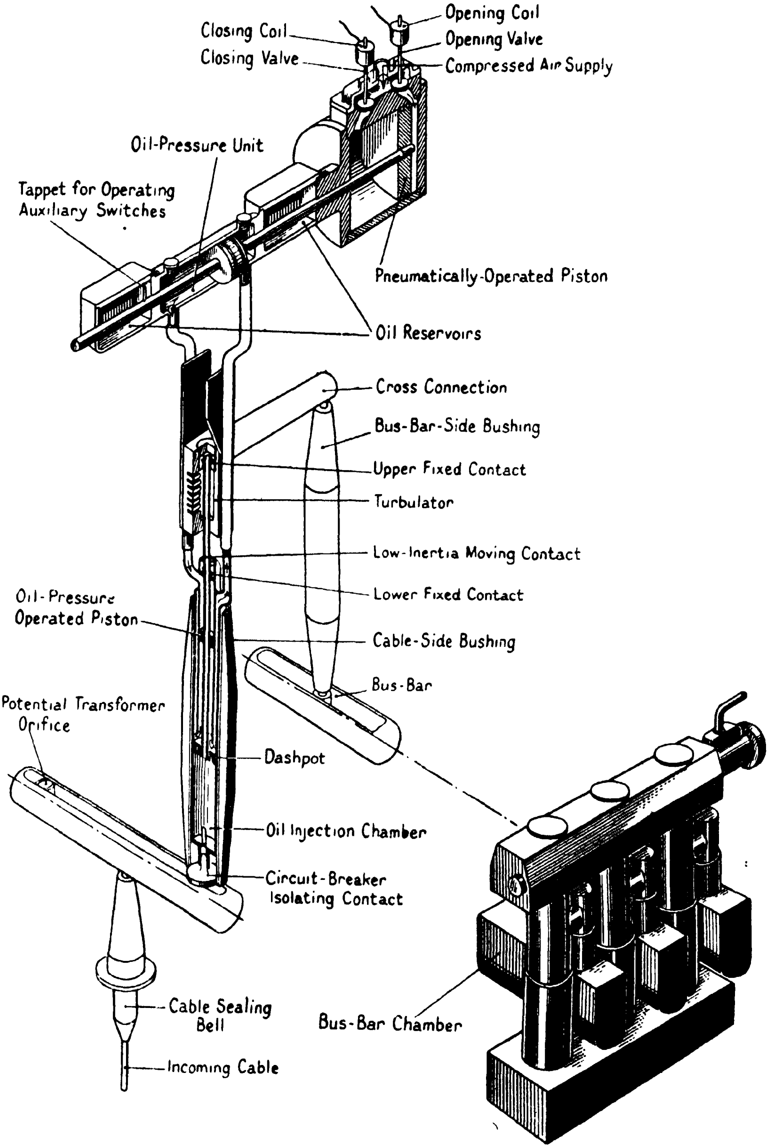

Arrangement of Three-Phase Oil Circuit-Breaker

[*Journal I.E.E.*

FIG. 118.

Thus the oil volume is reduced to a minimum, a 1,500-MVA breaker requiring only 90 gallons.

Fig. 118 shews a further design (A. Reyrolle and Co.) for the same voltage and breaking capacity, and embodying the same principles. As in the case of the examples above described, each phase is completely separate, there being three single-break circuit breakers assembled as a three-phase unit with a common operating mechanism. A cellular chamber forms the bedplate for each three-phase unit and this is divided into six compartments, the circuit isolating contacts being housed in alternate compartments. The busbar chambers are separate oil-filled trunks supported transversely on the bedplate as shewn in the figure, which also shews clearly the complete scheme of the pneumo-oil operating system. Complete isolation of the circuit breakers is achieved by raising the three-phase unit vertically by oil pressure.

Impulse Circuit Breaker.—In this type of circuit breaker the movement of oil is achieved by external power and the claim to insert new oil between the gaps is more logical. Unlike the devices previously described in which the degree of oil movement, and therefore the speed of interruption depends upon the current, the operating time, by reason of the impulse feature, is virtually constant. Fig. 119 shews a cross-section of one unit of a three-phase breaker installed at a station on the Grid system. These breakers are rated at 1,500 MVA at 132 kV. Referring to Fig. 119, it will be seen that each phase is contained within two large oil-filled shedded insulators fitted into either side of an earthed central housing which contains the operating mechanism and serves to support the breaker unit which is mounted at a slight inclination to the horizontal. The right-hand casing encloses a bakelite tube, one end of which terminates in the closing cylinder 18 and the other end in the cross-jet assembly. The moving contact 19 is a rod which slides through a guide tube surrounded by a condenser bushing, one end of which projects into the bakelite tube which forms the arcing chamber 31. The two terminals are at the outer ends of the two porcelain bushings. The main fixed contact 20 is spring mounted and of the butt type and is located opposite a side vent in the cross-jet assembly. A flexible lead conducts the current from the main fixed contact to a further contact 27 which butts against the spring loaded fixed contact 28. These contacts are located opposite a further by another set of cooling plates located at the upper end of the vent pipe.

The fixed contact is located at the base of the chute between two insulating blocks and consists of a number of silver-surfaced spring-loaded copper fingers, the arcing portion being surfaced with a silver-tungsten alloy. The moving contact consists of a flat copper silver-surfaced blade, the arcing tip being also of silver-tungsten alloy.

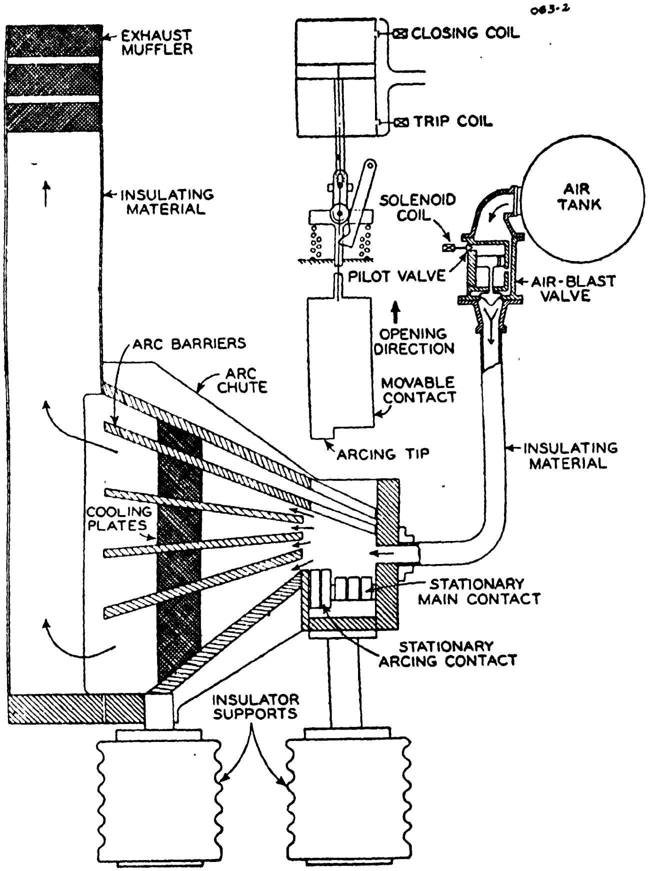

[*Trans. Amer. I.E.E.*

FIG. 143.

The air-blast valve is of the differential type which facilitates high speed operation. The valve body is of bronze and comprises a piston operated main valve and a solenoid-operated pilot valve. Both valves are spring loaded. When the blast valve is closed, the whole valve body is filled with compressed air from the air tank, the volume above the piston being filled *via* a small bleed hole in the piston head. When the solenoid coil is energized, the spring-loaded pilot valve is unbalanced, thereby allowing compressed air to escape from the upper side of the piston at a greater rate than it can be supplied through the bleed hole. Consequently the unbalanced pressure on the two faces of the piston lifts the latter and opens the main valve, admitting compressed air into the interrupting chamber. Directly the main blast valve begins to open, the air escaping past its seating adds its pressure to that on the upper side of

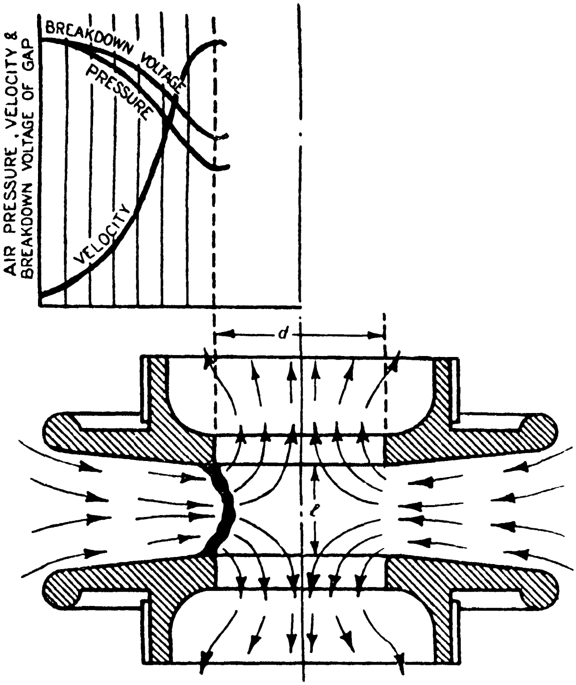

[*Journal I.E.E.*

FIG. 144.

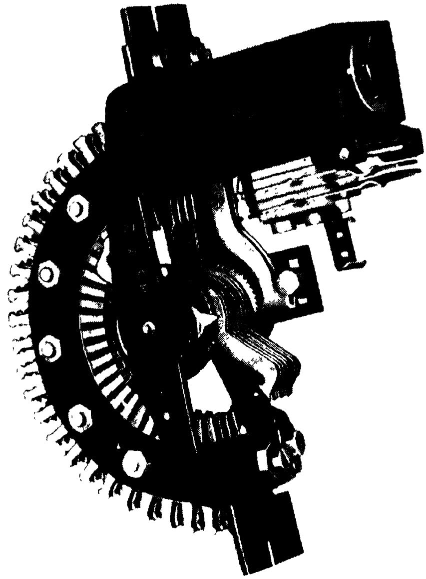

(A) 50-Point Uniselector.

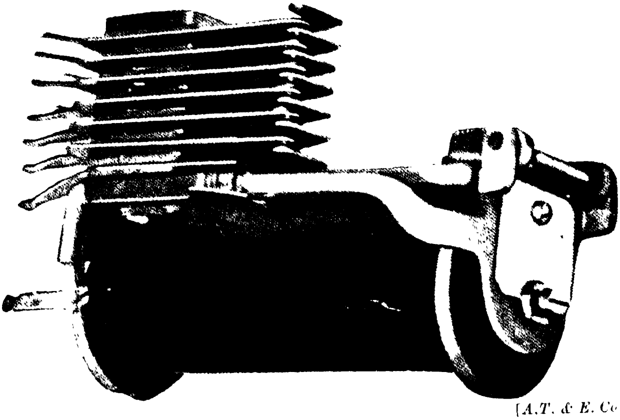

[A.T. & E. Co.

(B) Fast Relay.

Fig. 234.

[To face page 332.

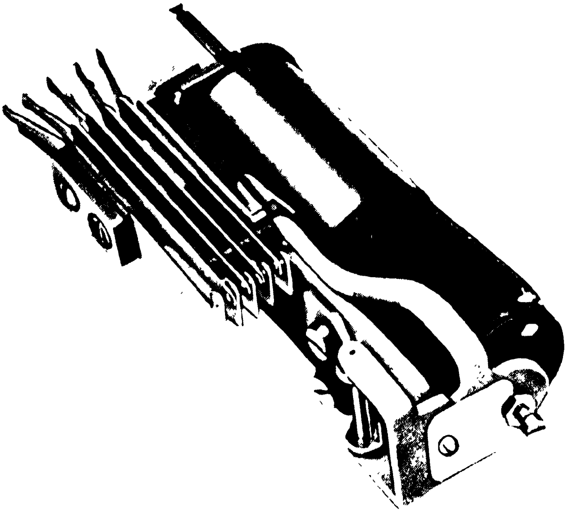

(C) Slow Release Relay.

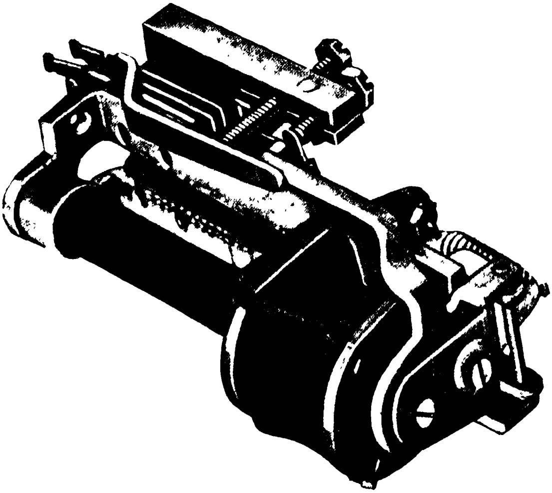

[A.T. & E. Co.

(D) Polarised Relay.

FIG. 234.

the piston so that the valve opens very quickly. The movement of the pilot valve is utilized to open the operating valve, thereby allowing compressed air to flow from the tank to the lower side of the piston controlling the moving contact, which then retracts upwards. The high velocity air forces the arc against the arc barriers where it is divided into sections. At a current zero, the arc products are removed, leaving clean air across the arc path, thereby facilitating arc extinction. It will thus be evident that the functions of the arc chute resemble those of the cross-jet explosion pot in an oil circuit breaker. To close the breaker, compressed air is admitted to the upper face of the operating piston controlling the moving contact. After both opening and closing operations, the air supply is cut off by mechanically operated switches which break the control coil circuits.

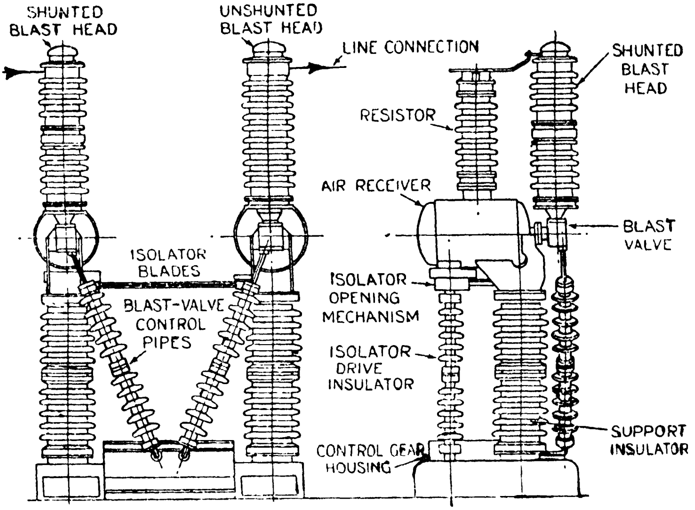

[*Journal I.E.E.*

FIG. 145.

The Radial-blast Breaker.—The form of nozzle employed in a radial-blast breaker of British manufacture is shewn in Fig. 144, from which it will be seen that air flows radially into the nozzles and therefore attacks the body and roots of the arc. It will be noticed that the contact surfaces bounding the lateral air passages are cambered, so that as the air approaches the nozzle orifices, its velocity increases owing to a corresponding reduction of cross-section of its path. This increase in air velocity is, of course, accompanied by a reduction in air pressure, resulting in a reduction of its dielectric strength as shewn by the graphs. With certain values of gap length and nozzle diameter, the minimum value of dielectric strength will occur at the orifices so that the arc will always restrike across this path, as shewn.

Fig. 145 shews two views of one pole of the breaker and Fig. 146 is a photograph of the complete three-phase breaker. There are two blast heads per pole, each mounted on its own blast valve and air receiver. The blast valves are operated by means of control valves, located in the container at the base, through the blast valve control pipes. The latter are also used as supply pipes from the air compressors to the receivers. One blast head is permanently shunted by a wire-wound non-inductive resistor. The blast heads are connected by the isolator, which consists of two blades horizontally rotated in opposite directions by torsion insulators, pneumatically driven by a mechanism also housed in the base container. Each isolator blade spans half the gap (see the photograph) and since they rotate in opposite directions the gap is opened at double the speed of each blade.

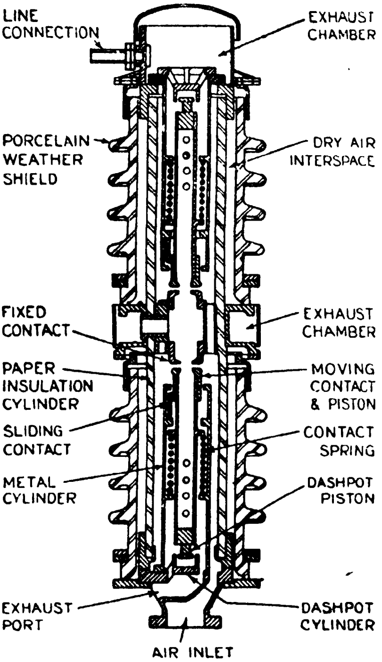

[*Journal I.E.E.*

FIG. 147.

Fig. 147 gives the arrangement of the shunted blast head. The central fixed contact assembly integral with the exhaust chamber, and the two moving contacts with their spring-loaded operating pistons and sliding contacts, are contained

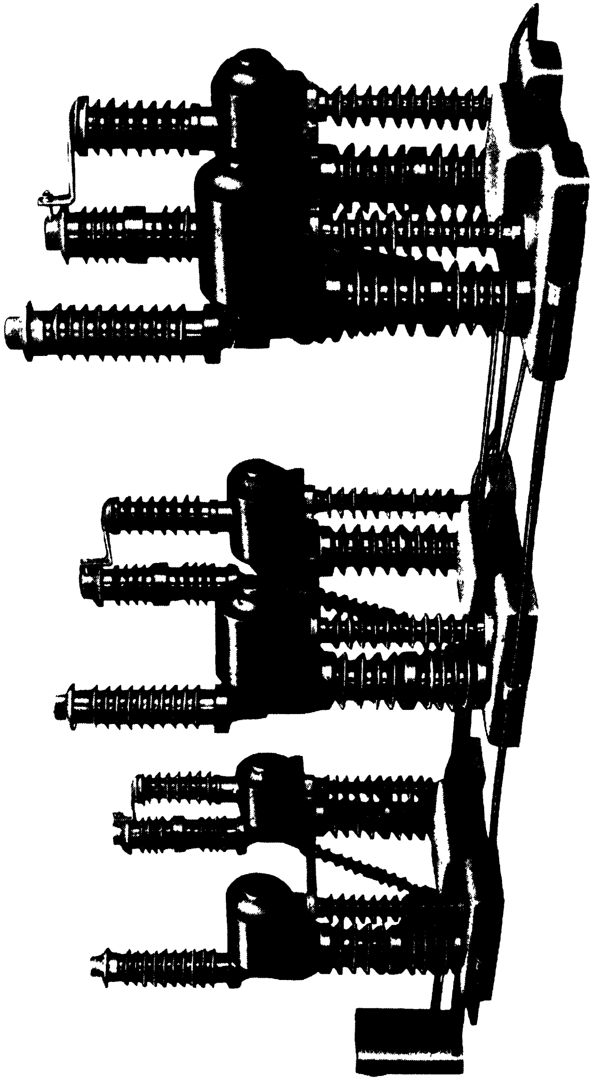

[B.T.-H.

Fig. 146.

[*To face page* 216.

within a paper-insulated cylinder and finally enclosed by porcelain insulators. The interspace is continuously supplied with dry air at a pressure slightly exceeding atmospheric. Both the fixed and moving contact surfaces are silver-faced. Both blast heads are similar, but the unshunted head is longer, the nozzle diameter is smaller and the contact gap is shorter. The reasons for these variations will be referred to subsequently.

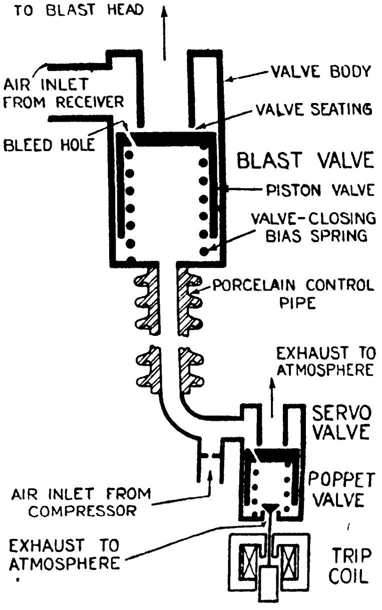

[*Journal I.E.E.*

Fig. 148.

Fig. 148 shews the arrangement of the blast and control valves, located respectively at the upper and lower ends of the control pipe. Both valves are of the differentially balanced type and co-operate in a manner similar to that already described in connexion with Fig. 143.

The operation of the breaker can be followed by the aid of Figs. 147 and 149. When the trip coil operates the valves, air is admitted into both blast heads simultaneously and the moving contacts of each break are retracted by the compressed air against the spring force. When the gaps are bridged by arcs, the air stream is injected into the body and roots of the arcs which are extinguished at a current zero. The restriking voltage transient by-passes the shunted gap *via* the resistor and occurs only across the gaps in the unshunted blast head. This gap breaks down and current flows through the resistor which is in parallel with the inductance L and the capacitance C. Since the resistor is now in series with the unshunted blast head, the latter has the comparatively easy task of breaking the resistor current. Finally the isolators open and the air supply to the blast heads is cut off, thereby allowing the retractable contacts to be reclosed by the contact springs.

It will be evident that the function of the shunted blast head is restricted to breaking the short-circuit current. For this purpose, a larger quantity of compressed air is made available. Thus it is provided with larger diameter nozzles and the length of break is correspondingly increased so as to avoid restricting the air flow. While the unshunted blast head has only to break a reduced current, it is evidently required to withstand successfully the restriking transient and to limit overvoltages to a safe value. To satisfy these require-

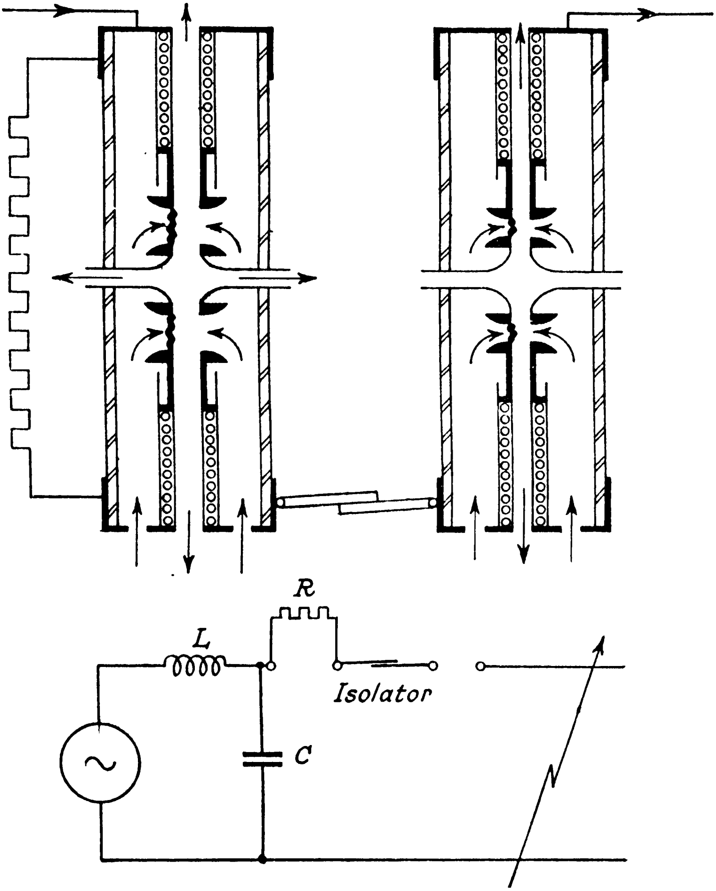

FIG. 149.

ments, the nozzle diameter and length of break are kept smaller. Thus an important feature of this design is the proportioning of each blast head to suit its particular function.

The breaker above described is rated at 2,500 MVA at 132 kV. For breakers of lower ratings at 132 kV and 66 kV, a shunted blast head only, together with the series isolator, is employed. In such cases, instead of using a wire-wound resistor, which requires a separate blast head to interrupt the resistor current, a non-linear resistor is employed and the resistor current is interrupted on the isolator contact in free air.

The non-linear resistor consists of a stack of special carborundum disks which has a very high resistance when the voltage across it is low, but this resistance rapidly decreases as the voltage increases. Thus after arc extinction has occurred, if the voltage applied to such a resistor is sinusoidal, the resulting current obviously cannot be sinusoidal but remains almost zero until the voltage approaches its maximum value, when a momentary pulse of current occurs. The long zero current pause will evidently facilitate de-ionization and thus enable the resistor current to be easily interrupted in free air on the isolator contacts, thereby rendering a separate blast head unnecessary.

Since the resistance is high when the voltage is low, the natural frequency, and therefore the rate of rise of the restriking voltage transient, is not appreciably reduced, but on the other hand, since the resistance falls as the voltage across it is increased, the *peak* value of the restriking voltage (or other voltage oscillation) is reduced. This will be evident from the transients of Fig. 135.

Compressed-air Equipment.—Since air-blast breakers depend for their operation upon the supply of compressed air, it is obviously imperative that the high-pressure air equipment should be thoroughly reliable. Fig. 150 shews a typical scheme. The air is taken through an air filter F into the electrically driven air compressor AC and is then taken through a cooler C into the main receiver MR. When entering the receiver, the compressed air is projected on to a plate, and at the same time, its pressure is reduced suddenly to that in the air receiver, with the result that the moisture in the air condenses on the plate. The water collects in the bottom of the chamber and can be removed by means of the drain D. The receiver is also equipped with a pressure gauge and relief valve. A pressure switch, associated with the gauge, is arranged to start up the compressor motor if the air pressure falls below a certain value. This switch is also utilized to give an alarm. After leaving the main receiver, the air passes next through the pressure reducing valve RV, also fitted with a drain, to the receivers BR which directly operate the air-blast breakers. The air is stored at a higher pressure in the main receiver (up to 500 lbs. per square inch) than that in the breaker receivers, since owing to the higher pressure, a greater amount of air can be stored, and also because when the pressure in a local receiver falls, owing to the operation of a breaker, it can be restored in a shorter time. The air capacity and pressure for which the main receiver is designed depends upon the breaking capacity and the number of breakers to be supplied and also, of course, upon the frequency of their operation. Isolator valves I are installed in the pipe work, as shewn, in order that any pipe section or apparatus can be isolated for maintenance. A slight incline in the pipe work facilitates drainage. The duplication of the compressor equipment is clearly a necessary precaution.

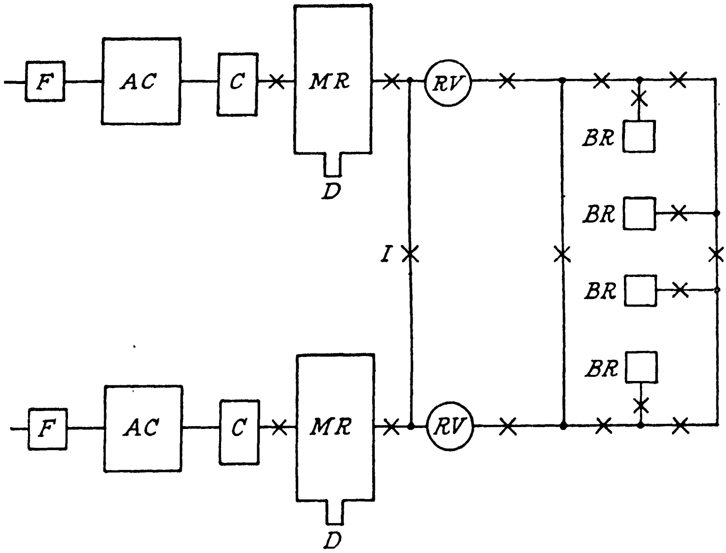

Fig. 150.

Each air receiver associated with a breaker is equipped with a pressure gauge and with over pressure and non-return valves, the latter being to prevent a feed-back if a fall of pressure in the main system occurs. A pressure switch (see Fig. 136) is associated with the gauge, and arranged to give an alarm when the air pressure falls below a predetermined minimum value. This switch has a short time delay so as to prevent its operation when a momentary pressure fall occurs, due to air consumption when the breaker is operated.

The pipes feeding the breaker receivers are shewn as a closed ring. Other methods of duplicating the air supply will be obvious.

Testing of Air-blast Breakers.—The tests required by the British Standards Institution to prove the breaking capacity of oil circuit breakers are insufficient for air-blast breakers, since it is necessary, in addition, to prove that the latter type of breaker does not give rise to voltage transients of excessive magnitudes under operating conditions. The most convenient type of voltage transient to produce, under test conditions, is that due to current chopping in an inductive circuit, the transient being, of course, recorded by a cathode-ray oscillograph.

For air-blast breakers having a breaking capacity exceeding the output of the circuit-breaker testing plant, two-part testing may be employed (see p. 193), but while this method of testing may be considered suited to oil circuit breakers, where the volume of gas generated increases with the MVA actually broken, it is not so satisfactory for an air-blast breaker. In the latter case, the volume of air is always that related to the *maximum* breaking capacity, and thus the air-blast breaker would obviously be able to break the reduced MVA corresponding to the two tests, i.e., rated current at reduced voltage and reduced current at full voltage, but there is evidently no guarantee to be obtained from these tests that it is capable of breaking its rated MVA. It has been suggested that the reduced MVA could be offset by reducing the air pressure and therefore the volume of air, but this expedient is not practicable because the required reduction in air pressure corresponding to the reduction in voltage is a matter of conjecture.

When air-blast breakers employing a number of breaks per phase are to be tested, each break can be separately tested at a correspondingly reduced voltage. Consider, for example, the double-break circuit breaker shewn in Fig. 140. The upper break would be short-circuited and the lower break would be tested with the full breaking current but at half rated voltage. During the test, both breaks must be allowed to operate so that the normal air flow is not interfered with. The upper break would then be tested in a like manner. This method has been termed " unit testing ".

When unit testing is employed, precautions must be taken in order to ensure that the restriking voltage transient, which appears across the break being tested, is of the same shape and magnitude as it would be if all the breaks were being tested in series under the full voltage. This can be ensured by incorporating condensers or resistors in the breaker, connected across the various series breaks and of such values that their impedances will be low in comparison with the surge impedance of the test plant which controls the shape and characteristics of the restriking transient. If, for example, the impedance connected across the breaks was of the order of (say) one-tenth of the circuit surge impedance, the restriking voltage transient would evidently be dominated by the breaker shunt impedances, and each break would take its proper share of the restriking transient.

In practice, the required capacitance values of condensers are such as to render their use impracticable. If, however, resistance switching is employed, the resistor itself may be used for the purpose of unit testing the breaker. Referring to Fig. 149, imagine the resistor to be tapped at its mid-point, and this tapping to be connected to the stationary contact, then the lower break may be tested with the upper break short-circuited and *vice versa*, and the restriking transient across each break would be the same as if they were tested in series at double voltage.

Chapter VIII

POWER STATION SWITCHGEAR ARRANGEMENTS AND SHORT-CIRCUIT CALCULATION

Switchgear Arrangement.—The physical arrangement of the switchgear in a power station should receive as much attention as its design, since a sound reliable scheme can only emerge if careful attention is paid to each component part. The arrangement chosen should bear a direct relationship to the characteristics of the load. For example, an elaborate and complex switchgear scheme might easily be justified in the case of a base load station supplying energy to the National Grid or to an important industrial area in which the suspension of the supply would be disastrous, but such a scheme could not be justified in the case of a station supplying energy to consumers of a less important character. The importance of a power station switchgear scheme must, however, be assessed in relation to the whole system. For instance, the switchgear in a medium-sized station supplying energy to the National Grid might, in addition to its duty of dealing with the output of this station, form a connecting link amongst various sections of the grid. In such a case, the switchgear must continue to function even if all the generators become disconnected, since it evidently does not belong exclusively to the station in which it is installed, and for this reason an elaborate scheme could be justified. On the other hand, if a station containing 50 MVA of generating plant were interconnected with a system of 750 MVA capacity, it might be difficult to justify anything more than the simplest switchgear layout. Again, in the case of a large generator, transformer or an important trunk feeder, duplicate circuit breakers may be justified since the failure of the service breaker might result in the temporary loss to the system of the generator, transformer or feeder at a time when such is urgently required. Finally, a risk in emergency might be taken in the case of a station supplying a load having a low load factor, while a corresponding risk could not be taken in the case of a station giving a supply at a high load factor to the National Grid.

Having regard to the importance of the switchgear, it is evidently most essential that this vital link in the power system shall be free from immobilization. Circuit breakers and components which are adequate for the most onerous conditions must be installed. In addition to the breakers, the cables and other connexions including all current transformers must be designed to carry safely the maximum short-circuit current and to withstand the resulting electromagnetic stresses. The curves in Fig. 151 give the relationship between

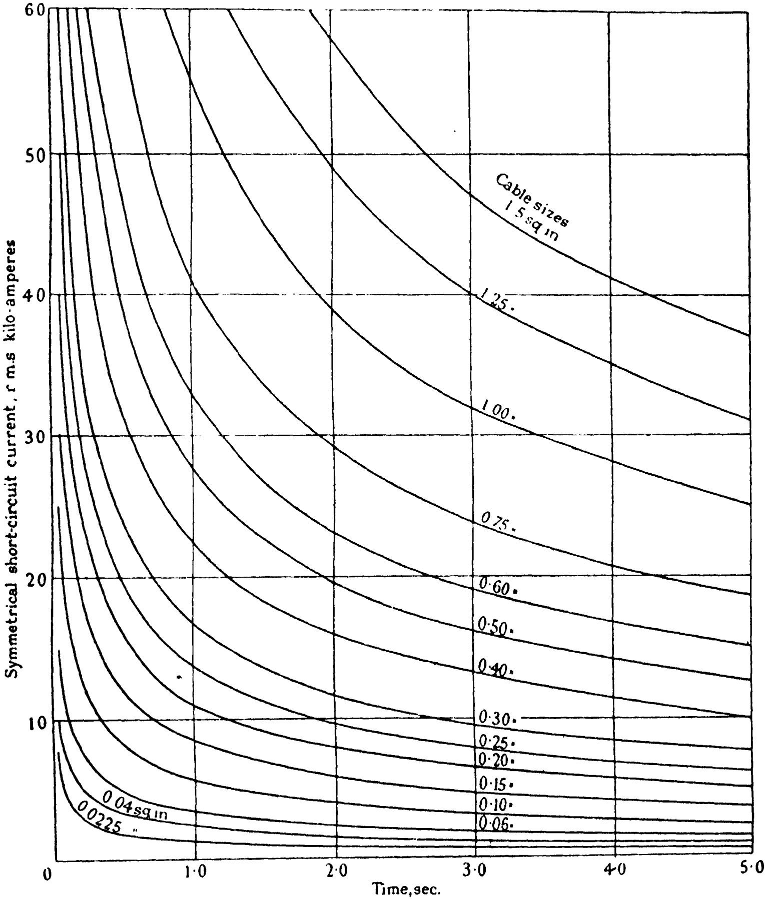

[*Journal I.E.E.*

FIG. 151.

the short-circuit current and the time from its inception for different cross-sectional areas of paper-insulated lead-covered single-core cables. It will be evident that fast-acting protective gear and circuit breakers will tend to reduce the size of the cables and connexions and the curves emphasize this aspect of system design since the same considerations, of course, will impose a limit on the minimum cross-section of the transmission cables.

The subject of fire protection is also one of great importance, due to the serious dislocation that results from fire or explosion of even the reduced quantities of oil employed in modern circuit breakers. This matter will be referred to later.

Generators.—The modern tendency is to provide a small number of generators of large kW capacity, since this tends to reduce both the cost and complexity of the switchgear. As switchgear operates better for a given MVA at high voltages, i.e., with low current, the tendency is to adopt a high switching voltage. This increases the cost per circuit and hence it becomes necessary to reduce the number of circuits.

For base-load stations, generating units of about 50,000 to 75,000 kW appear to represent standard practice, while for smaller stations, 30,000-kW sets are usually employed. There does not appear to be any gain, as far as the generators themselves are concerned, in employing sets larger than 30,000 kW, but in the case of very large stations it becomes an economic necessity to do so in order to keep down the total number of generators. The generating voltage depends to some extent upon the switching voltage. If it is decided to operate the busbars at a voltage not exceeding 33 kV, the generators may be designed to give this voltage, thus obviating the necessity for transformers between the machines and the busbars. When, however, a higher busbar voltage is required and transformers have to be used in any case, a lower generating voltage than 33 kV is to be preferred, and for a given generator the optimum voltage corresponding to the design is adopted, the voltage ratio of the step-up transformer being adjusted accordingly. There is very little reason at the present time to develop generators at 66 kV, as the cost of a generator at this voltage would be no less, and the efficiency no higher, than those of a lower voltage generator together with a step-up transformer, while the latter has the advantage that the high voltage windings are oil insulated. Direct generation at the switching voltage generally means that the reactance between the generators and the switchgear will be low, and thus the cost of the switchgear scheme will be increased since cost is very dependent upon the breaking capacity. An advantage of eliminating the generator transformer is that the risk of an oil fire occurring is reduced; moreover, while the cost of transformers is relatively small, their housing in accordance with fire protection standards is an expensive matter.

The busbars of a large power station are invariably sectionalized for reasons of short-circuit protection. The Electricity Commissioners have recommended * that major switchgear installations shall be divided into sections and that each section shall be housed in a separate switchhouse, or alternatively, each section shall be placed in a separate switch room with fireproof walls between rooms. Further recommendations are that a capacity not greater than 60 MVA of generating plant, or if the generators are larger than this, not more than one generator, shall be connected to a busbar section, and that the maximum current carried by each busbar or circuit breaker shall not exceed 2,000 amperes. Taking 60 MVA and the maximum current of 2,000 amperes, it will be evident that the corresponding busbar voltage will be of the order of 20 kV, and probably 33 kV would be regarded as a suitable voltage for these conditions.

Switchgear Scheme Components.—The component parts of a switchgear control scheme for a power station may be classified as follows:

(*a*) The busbars,
(*b*) The circuit breakers,
(*c*) The circuit connexions including instrument transformers,
(*d*) The disconnecting and selector switches.

All these four components are necessary in any scheme, of however modest dimensions, and it is a basic principle in switchgear design that the scheme should be as simple as possible. Commencing with the fundamental scheme comprising one set of busbars and a single circuit breaker per circuit connected to the busbars, together with the necessary instruments and connexions, every additional piece of apparatus and switch must make a definite contribution to the flexibility and ease of control and operation, or alternatively it must

---

* Fire Risks in Generating Stations, 1938. H.M. Stationery Office.

increase the immunity from breakdown. Any additional apparatus which does not justify itself in the above manner represents idle capital and an additional potential source of breakdown.

Power Station Busbars.—The purpose of the power station busbars is to provide the means for connecting together the generators, feeders, etc., to enable power to be transmitted to the load centres having regard to continuity of service. Bearing in mind the necessity for working occasionally on the busbars during extension or for cleaning, testing or replacing insulators whilst still maintaining continuity of supply, it is usually essential to install either double busbars or a sectionalized single busbar. To understand clearly the functions of additional busbar systems, the various arrangements will be classified and described.

Single Busbar.—The simplest scheme involves the provision of a single busbar only. This is shewn in Fig. 152, in which G represents a generator or incoming feeder, depending upon whether the busbar is located in a power station or sub-station, and F represents an outgoing feeder. CB denotes the circuit breakers and IS the isolating switches. Such an arrangement might be employed in the case of a small generating station interconnected with a large system. When it becomes necessary to de-energize the busbars for any reason, the whole of the generating capacity of the station is lost, but since this will only constitute a small proportion of the total capacity of the system, this prospect can be faced without appreciable inconvenience. In the case of a more important

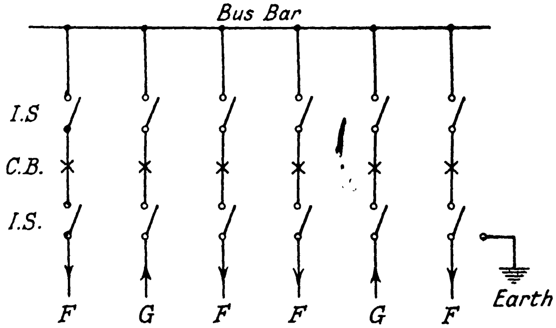

Fig. 152.

station, the busbar might be divided into two sections, the sections being connected together by means of the busbar coupler circuit breaker BC. This scheme is shewn in Fig. 153, and it will be evident that either section busbar can be de-energized, thus immobilizing only one-half of the generating capacity. If, however, the supply to each section of the distribution network is transmitted through duplicate feeders—and this is accepted practice—then these two feeders would be supplied from separate busbar sections and it is thus evident that, during periods of light load, either one of the busbar sections could be de-energized whilst maintaining the normal service.

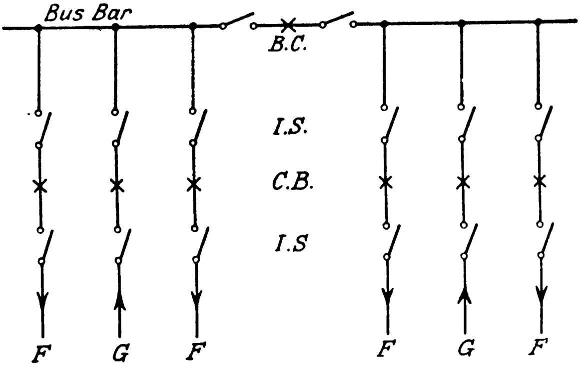

FIG. 153.

Each circuit is provided with isolating switches on both sides of the circuit breaker. This is essential in order that any circuit breaker, together with its associated current transformers, instruments, etc., may be completely de-energized for the purposes of cleaning, inspection and repair. When any isolating switch connecting a feeder, etc., to the circuit breaker is opened, an additional contact on the isolator earths the circuit. This is shewn in the case of one feeder in Fig. 152. This precaution is, of course, essential.

Duplicate Busbars.—The main station busbar may be defined as the busbar which is normally energized, while the reserve busbar generally in all respects is a duplicate of the main busbar. There is, of course, fundamentally no difference whatever between the main and reserve busbars. Fig. 154

shews a scheme which utilizes a reserve busbar, and it will be noticed that all circuits connected to the main busbar can be transferred to the reserve busbar so that the former may be de-energized. Such an arrangement is essential if complete continuity of supply is to be maintained. The generators and also feeders A and E are provided with duplicate circuit breakers, since these are presumed to be too important to take any risks. Feeders B, C and D are not of major importance and are therefore equipped with one circuit breaker only. Two busbar coupling circuit breakers are provided and the closing of either enables all circuits to be transferred from one busbar to the other, but these additional breakers may obviously be redundant when some of the circuits are equipped

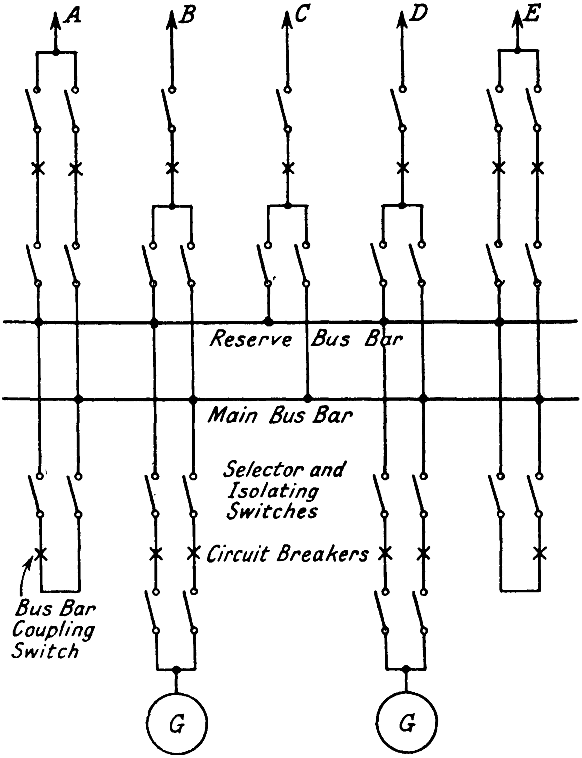

Fig. 154.

with duplicate circuit breakers, as shewn in the diagram. When both busbar coupler switches are closed, the two busbars form a closed ring.

It will be noticed that the generators are not connected to one end of the busbars and the feeders to the other, which would involve transmitting all the energy along the busbars, but the generator and feeder circuit breakers are alternated so that the busbars carry only that portion of the energy which is transferred to a feeder. This enables the cross-sectional area of the busbars to be kept down ; a matter of importance especially when the busbars are operated at the generating voltage. The old idea of the busbar being a long piece of copper which carries the current from the generators to the feeders is now rapidly dying.

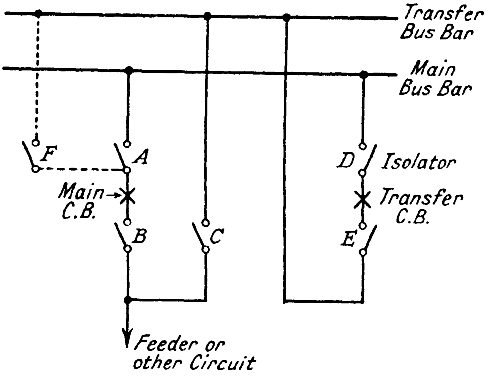

FIG. 155.

Transfer Busbar.—A transfer busbar, together with a transfer circuit breaker (see Fig. 155), provides an alternative to the duplication of the circuit breakers on important circuits and generators. Referring to the diagram, and ignoring the dotted connexion for the moment, the feeder would normally be supplied from the main busbar *via* isolating switches A and B and its circuit breaker. If this circuit breaker is to be de-energized, isolators C, D and E and also the transfer circuit breaker are closed, thereby energizing the transfer busbar. Finally, the main circuit breaker and the isolators A and B are opened and the feeder is now supplied from the main busbar through the transfer circuit breaker and the transfer busbar.

The function of this busbar must be thoroughly understood; it simply provides the means for by-passing any main circuit breaker and its associated equipment through the transfer circuit breaker, and does not in any sense represent a reserve busbar.

Unfortunately, due to the fact that an extra selector switch per circuit, C, is required, the scheme evidently cannot be applied to contemporary design of metal-clad switchgear. It is, however, obviously suited to cubicle-type gear, but the latter is not usually employed for major switchgear in this country.

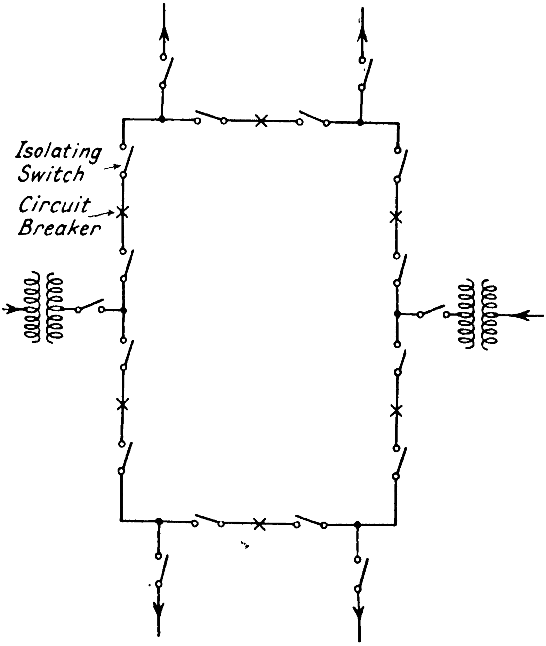

FIG. 156.

Combined Reserve and Transfer Busbar.—If, in Fig. 155, the connexion shewn dotted at the left of the diagram be added, the auxiliary busbar can separately function either as a reserve or a transfer busbar, but it cannot combine these two functions simultaneously. By closing isolators B and F and also the feeder circuit breaker, and opening isolators

A and C, and repeating this on all circuits connected to the main busbar, the latter will be de-energized. Of course, isolators D and E, together with the transfer circuit breaker, will be kept open.

The Mesh Busbar.—In cases where the number of circuits is small, the scheme shewn in Fig. 156 can advantageously be employed in which the circuit breakers in the feeders and sources of supply are omitted, and circuit breakers are used simply to sectionalize the ring busbar. Every circuit is connected to a separate busbar section, and faults on the system must be cleared by the tripping of the two appropriate circuit breakers. This scheme has been employed in connexion with substation switchgear schemes, but it will evidently complicate the protective gear arrangements. Its advantage is that while the total number of circuit breakers does not exceed the number of circuits, any breaker can be isolated without interrupting the service or losing the use of any circuit, thereby obviating the necessity for a spare circuit breaker. This saving is obviously of importance in the case of high voltage switchgear. It will be seen that the busbars take the form of connexions between circuit breakers.

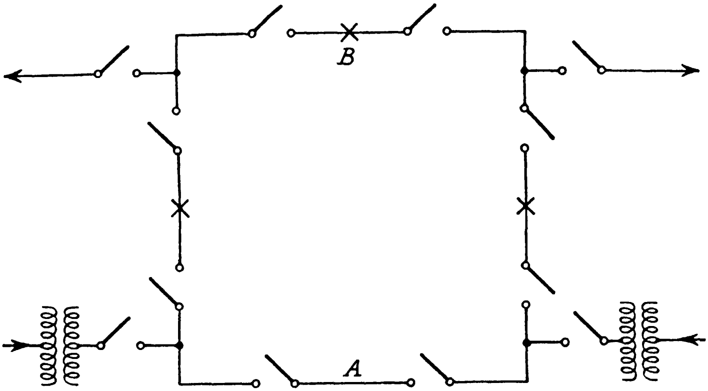

FIG. 157.

Normally all circuit breakers are closed and the ring formation maintained. A circuit is isolated by means of its air-break isolating switch.

In the case of a high-voltage substation controlling two transformers and two outgoing feeders, the number of circuit breakers can be reduced to three: This case, involving the duplication of feeders and transformers, will evidently occur frequently and thus is of considerable importance. Referring to Fig. 157, which shews the scheme, it will be clear that when the two isolating switches in the by-pass circuit, A, are closed, any one of the three circuit breakers may be isolated whilst maintaining connexion amongst both feeders and both transformers. If, however, a fault occurs on either feeder, the protective gear must be arranged to open the busbar section circuit breaker B, in addition to the appropriate breaker adjacent to the faulty feeder.

The two isolators in the by-pass circuit are provided in order that the contacts on all the isolating switches in the substation may be de-energized in turn during periods of light load, for the purpose of maintenance.

Arrangement of Busbars with Reactors.—If a reserve busbar is to be provided so that the main busbar may be de-energized without interrupting the supply, there are two main schemes of connecting busbars containing reactors. The " star " or " synchronizing " busbar design is shewn in Fig. 158.

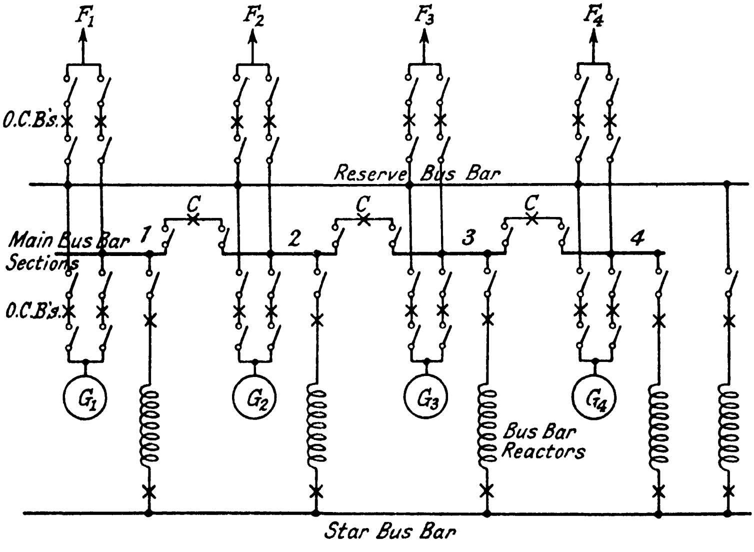

FIG. 158.

There are four main busbar sections shewn in the diagram and one generator and one feeder per busbar section. It will be understood that there may be any number of feeders and also more than one generator per busbar section. Each main busbar is connected to the star busbar through a reactor, the busbar coupler circuit breakers marked C being normally open. If it was decided to shut down (say) generator G_2, and to give feeder F_2's load from generator G_1, then the circuit breaker which connects the main busbar section No. 1 to the star busbar through the reactor would be opened and the circuit breaker C, interconnecting main busbar sections 1 and 2, closed. It will be clear that although the term " star " busbar has been employed to denote the common or star point to which all reactors are connected, this common connexion is not a busbar in the ordinary accepted sense of the term.

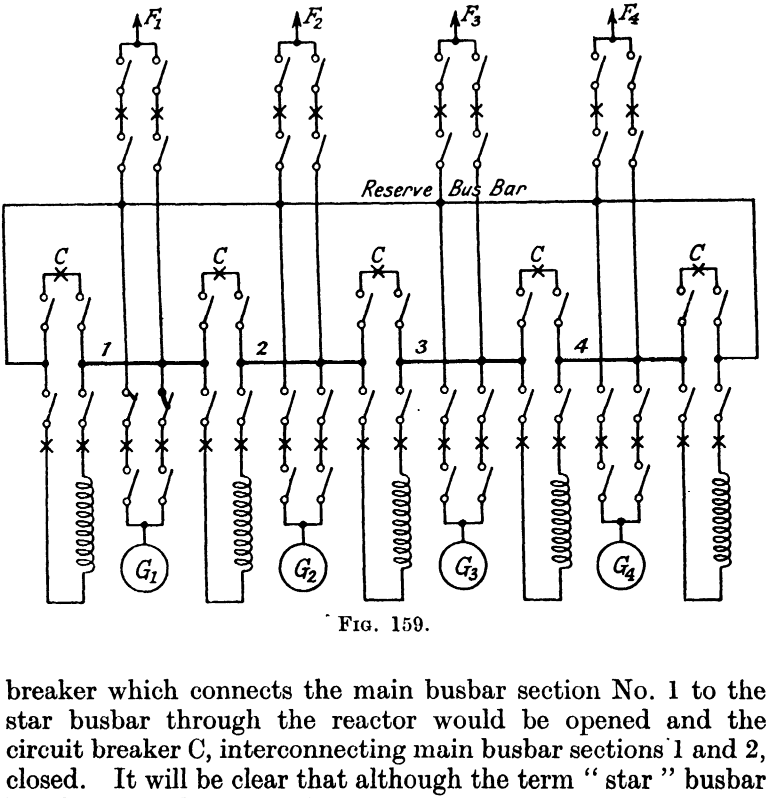

FIG. 159.

The " ring " busbar design is given in Fig. 159. As in the case of the star design, the diagram shews four main busbar sections, but in the ring design each section is tied to its neighbouring sections through reactors, which are inserted by closing the appropriate circuit breakers. The main disadvantage of the ring design is, however, that if one main busbar section is to be de-energized, the ring formation evidently cannot be maintained. For example, imagine that main busbar section No. 2 is receiving energy from busbar sections 1 and 3 and busbar section No. 3 is to be de-energized, generator No. 3 and the corresponding feeders having been transferred to the reserve busbar. Under this condition, busbar section No. 2 can only receive energy from section No. 1 *via* the reactor interconnecting them, and thus the voltage drop on this reactor is doubled. It is thus evident that if the busbar system is designed for the correct value of reactance when the ring is closed, then when the ring formation is broken, the voltage drop on the end sections of the broken ring will be excessive if these are receiving energy from neighbouring busbar sections.

It will be evident that in both the star and ring designs, three circuit breakers per section are required, but whereas in the case of the ring design all three circuit breakers must connect directly to the busbars and will therefore be located in close proximity to each other, this condition is not necessary in the star design. In the latter case, the circuit breaker between the reactor and the star busbar may evidently be located in a position remote from the main switchgear, thus affording an important economy of space with respect to the latter. Thus when considerations of space for the main switchgear are important, as would probably be the case when additions are to be made to an existing installation, the star design is preferable.

Interconnecting Busbar Sections at the Load.—Instead of connecting the main busbar sections through reactors to the star busbar, as in Fig. 158, they may be connected by means of the high-voltage feeders and step-down transformers to the low-voltage network. This scheme is shewn in Fig. 160 and it will be seen therefrom that the low-voltage network forms the medium of interconnexion for the four main busbar sections. The generators connected to each busbar section are thus synchronized with the others only through the low-voltage network. This scheme, without introducing artificial reactance, clearly gives high values of reactance between busbar sections as compared with the reactance values obtained by interconnecting the busbar sections at the power station. Suppose, for example, a short-circuit occurs on feeder A near the busbars. Generator No. 1 supplies the short-circuit kVA direct to the fault, while generator No. 2 contributes its share *via* two paths in parallel; through feeder B, low-voltage network and feeder A and also through feeder D, low-voltage network and feeder C. If Z is the impedance between each section busbar and the low-voltage network, and the impedance of the low-voltage network itself can be neglected, then the

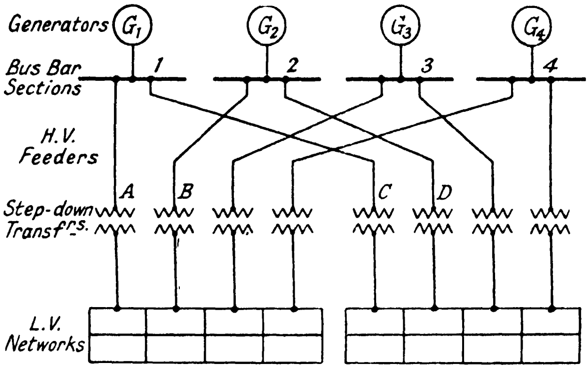

FIG. 160.

impedance between one section busbar and the three others is evidently $\frac{1}{2}\left(Z + \frac{Z}{3}\right)$, or in general, $\frac{1}{2}\left(Z + \frac{Z}{N-1}\right)$, where N is the number of sections. This method has been adopted for the 27-kV system of the Consolidated Edison Co., New York.

Sectioning of Switchgear for Fire Protection.—The physical layout of the switchgear must be such that should an oil fire be initiated, it will not involve adjacent switchgear in a general conflagration. To satisfy this requirement, the switchgear controlling a major power station should be housed in a separate building, the building being further sectionalized into compartments with fireproof barriers between compartments. It is accepted practice to limit the number of circuit breakers housed in each component to a maximum of eight. The general principles of fire sectioning, applicable both to power stations and substations, are shewn in Fig. 161. In Fig. 161(*a*) a scheme involving a single sectionalized busbar is shewn, and it will be seen that a busbar sectioning circuit breaker is installed in each compartment; if, therefore, a fire breaking out in one compartment involves the corresponding section circuit breaker, the section circuit breaker associated with the unaffected compartment can be opened, thereby affording absolute isolation. Fig. 161(*b*) shews a duplicate busbar scheme with one circuit breaker per circuit. It will be noticed in this case that the busbar section breakers are not duplicated. This would obviously be unnecessary, since if a fire occurred in (say) the left-hand compartment, both busbar section circuit breakers would be opened and the feeders in the right-hand compartment operated on the upper busbar. Fig. 162 gives a scheme utilizing duplicate circuit breakers per circuit and duplicate busbars, the latter being housed in separate compartments. It may be pointed out

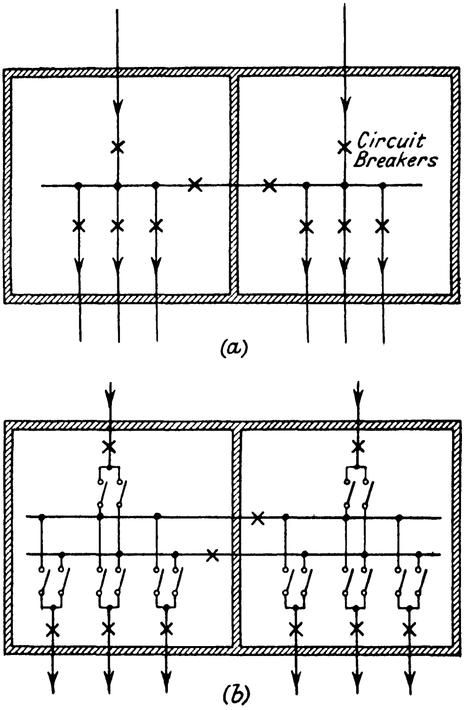

(*a*)

(*b*)

FIG. 161.

that this arrangement provides a *true* double busbar layout. The provision of duplicate busbars adjacent to one another may now be regarded as obsolete in the case of first-class gear since the most likely cause of breakdown is probably heat due to fire and arcing, which usually involves both busbars so that the provision of duplicates without fire segregation is an example of bad design. It will be noticed that the circuit cables and isolating switches are segregated from the remainder of the gear and also from each other. The cable trench should be filled in with pebbles to prevent neighbouring cables from being affected by the occurrence of arcing in a faulty one.

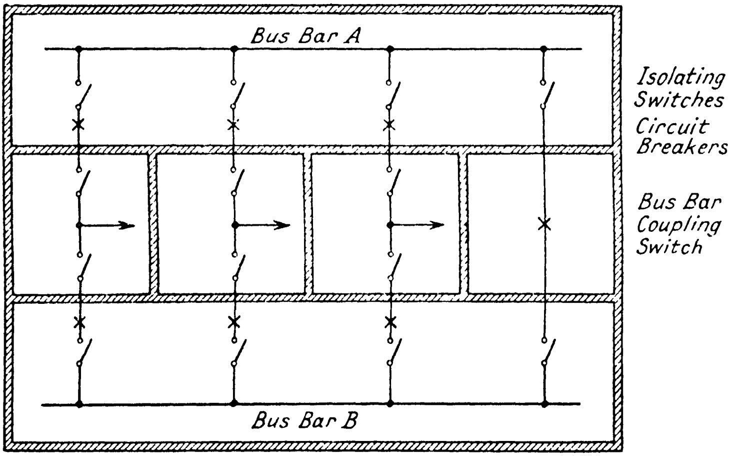

FIG. 162.

Cables for control purposes should preferably be segregated from the power cables, and all cables should be individually covered with fire-resisting material. A high capacity oil-drainage pipe system should be installed under the floor with headers rising to a position immediately beneath each circuit breaker for the purpose of rapidly removing the oil to the outside of the switchhouse. The maintenance of a constant temperature in the switchhouse is a matter of importance in order to prevent condensation, and for this purpose heaters should be installed.

Transformers and Reactors.—With regard to segregation for the purpose of fire risk, the principles already discussed can be applied to transformers and reactors, but in view of the larger quantities of oil involved special precautions are necessary. In the first place it is desirable to install each transformer in a separate compartment and the method generally adopted is to place the transformers and reactors in a position adjacent to the outer wall of the power station building and open to the outside. In the second place it is desirable to install apparatus for the detection of incipient faults of all kinds before arcing, which may initiate an oil fire, is likely to occur. The Buchholz protective device is being increasingly employed for this purpose. This apparatus is illustrated in Fig. 163 and the principle of operation is based upon the fact that every type of fault in a transformer (or in an oil-immersed reactor) causes the generation of vapour

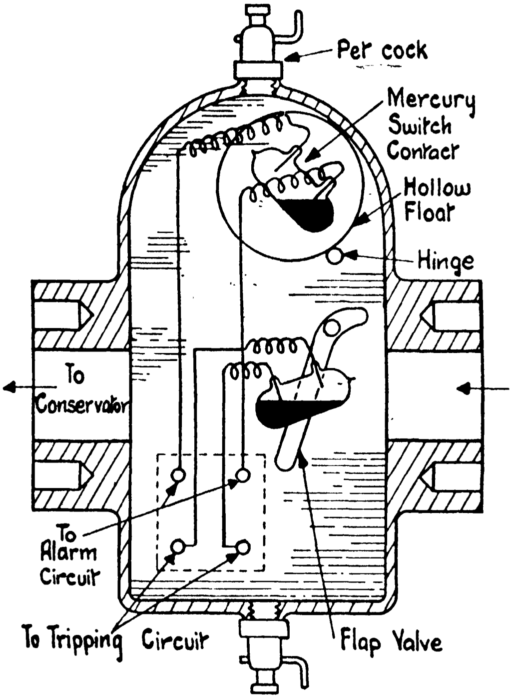

[*Metropolitan-Vickers.*

Fig. 163.

from the oil. The device is connected by means of pipes between the top of the tank and the conservator and is, therefore, under normal conditions of operation, full of oil. The device consists of a cast housing containing a hinged hollow float, inside of which is a mercury switch, the float being located in the upper part, and a hinged flap valve to which is attached a similar mercury switch, located directly in the path of the oil between the tank and conservator. If an incipient fault occurs, bubbles of gas are evolved by the heat generated and rise up to the tank surface and thence into the housing of the device where their through passage is prevented by the flap valve. The bubbles pass to the top of the housing, causing the oil level to fall, whereupon the hollow float follows, and when the switch contacts are short-circuited by the mercury, an alarm device is operated. If a serious fault occurs, the volume of gas thereby generated is considerable, and in moving through the device causes the gas surge flap valve to be deflected, thereby closing the mercury contact switch and energizing the trip coils of the circuit breakers. It will be evident that the device will also respond should the oil level fall due to leakage from the tank. The connecting pipe between the tank and conservator should be as straight as possible and should slope upwards towards the conservator at a small angle from the horizontal.

Fire Sectioning of Switchgear in Base Load Stations.—In the case of the largest stations, separate buildings for each section of the switchgear may be provided, each switchhouse containing the gear relating to the generator, feeders and reactor belonging to one busbar section. Fig. 164 shews a scheme suitable for such a station utilizing metal-clad switchgear. Referring to section 1 switchhouse, the generator supplying this section is direct-connected to the step-up transformer, the latter being located in the cubicle TC. The high voltage winding of the transformer is connected either to the main or reserve busbar through the appropriate circuit breaker. Feeders F are also connected in a similar manner. Each main busbar section is connected to the star busbar through a reactor, the latter being housed in the cubicle RC. It will be seen that the star busbar is duplicated, either A or B being used by means of the selector switches. The star busbars can conveniently be run over the cubicles RC and TC. A separate building is provided for the reserve reactor and the latter can be connected to the reserve busbar in any section switchhouse. Two sections are shewn, but further sections are added, as the station is extended, by connecting exactly similar switchhouse units to sections 1 and 2 to the points LMN.

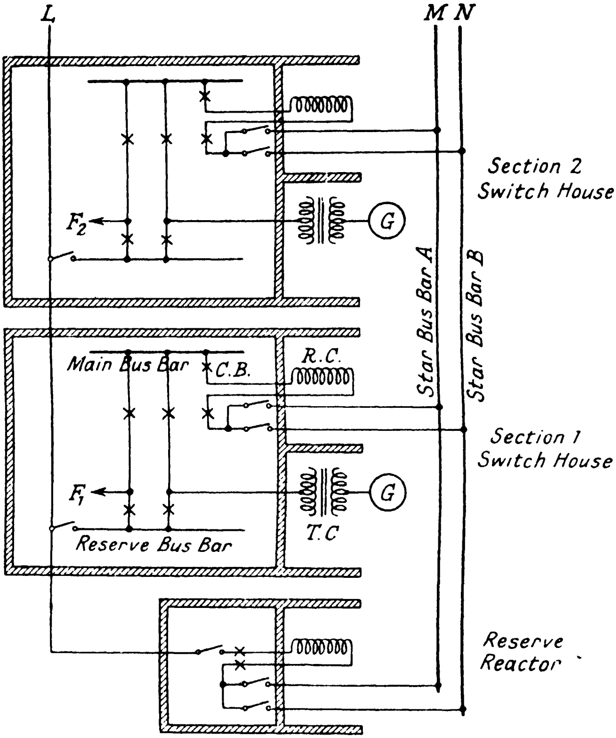

FIG. 164.

Power Supply for Auxiliary Purposes.—The considerations affecting the design of the circuits supplying power for the auxiliaries of a power station are similar to those governing the switchgear layout. If the station is supplying a base load and continuity of supply is of paramount importance, an elaborate scheme is justified, but for a smaller station simplicity of design would be the dominant consideration. In any scheme, however, the auxiliary supply must be completely reliable and must be available even when the main system is immobilized, so that the station may be quickly re-started after a complete shut down; it should therefore be as far as possible insulated from system disturbances.

Steam-driven auxiliaries are quite efficient if the exhaust steam can be put into the feed heat system. They are also well adapted to variable speed requirements. Their disadvantages are the high maintenance involved and the fact that in modern main turbines all the feed heat required is obtained from bled steam, so that the exhaust steam from the auxiliaries cannot be used unless the bleeding in the main turbines is restricted. For these reasons, modern practice favours motor-driven auxiliaries.

Constant-voltage direct-current auxiliaries are generally considered to be obsolete since D.C. motors are less robust, more complicated and more expensive; more sensitive to water, dirt and high temperatures, whilst direct-current starters require frequent maintenance. For these reasons, three-phase squirrel-cage motors which are switched directly on to the supply, even in sizes up to 600 b.h.p., are preferred. Direct-current supply offers certain considerable advantages for auxiliary drives where variable speeds are required such as motors driving automatic stokers and forced- and induced-draught fans, and for such special cases has recently been revived in the form of Ward-Leonard control which facilitates the speeding-up and down of all boiler auxiliaries together.

Sources of Supply.—Three sources of power for supply to auxiliary motors are employed in practice:

(*a*) Station service transformers.
(*b*) Unit transformers.
(*c*) Auxiliary A.C. generator.

An additional alternative is a separate steam-driven house generator, but this is uneconomical for continuous operation due to its low efficiency. Such sets are, however, usually installed purely for emergency purposes, although they are hardly ever run.

Referring to Fig. 165, which shews the usual arrangements for (*a*), MT is the main step-up transformer connecting the generator G to the main busbars, ST is the station service transformer fed direct from the main busbar, and H is the separate house generator for emergency service. A and B are station service feeders. In the case of a large station there would be a duplicate station service transformer fed from a different main busbar section. The motors driving the feed pumps and circulating water pumps may be supplied at a higher voltage than the generator auxiliaries on account of their large size, and in this case the station auxiliary busbar would be energized at a voltage of the order of 6,600. The feeders F_1 to F_4 supplying the generator auxiliaries would therefore be supplied from a sub-busbar energized at (say) 400 volts, as shewn in the diagram. All the sub-busbars would be arranged so that they may be connected in parallel, thus in the case of a failure of the main feeder A or its transformer, supply could be received by an alternative route. The disadvantage of this scheme is evidently that any disturbance on the main system, such as a dip in the main busbar voltage, affects the auxiliary motors, and if the latter were equipped with low-voltage releases, they may be shut down, thereby causing a dislocation of the supply. For this reason, low-voltage releases should be omitted, at least on the more important auxiliary motors, so that when the busbar voltage rises after the fault

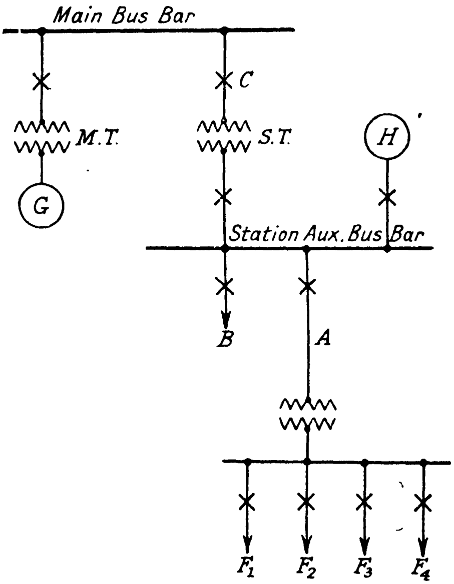

FIG. 165.

on the main system has been cleared, they will continue to operate.

Fig. 166 shews the arrangements usually adopted for a unit transformer UT. The latter is generally connected up solidly to the terminals of the main generator G, but an isolating switch may be provided, as shewn in the diagram. A comparison between Figs. 165 and 166 will shew that both systems are really the same in principle, the only difference being that the primary winding of the service transformer is fed at a lower voltage so that the unit transformer is really a device to enable a major circuit breaker C (Fig. 165) to be saved. Moreover, the unit transformer is included within the generator zone of protection since the generator and its step-up transformer would, of course, be protected as one unit, so that extra protective gear for the unit transformer will be saved. It will be evident that a breakdown of the generator or its connexions will also involve the loss of the supply from the unit transformer. This could be obviated by installing an

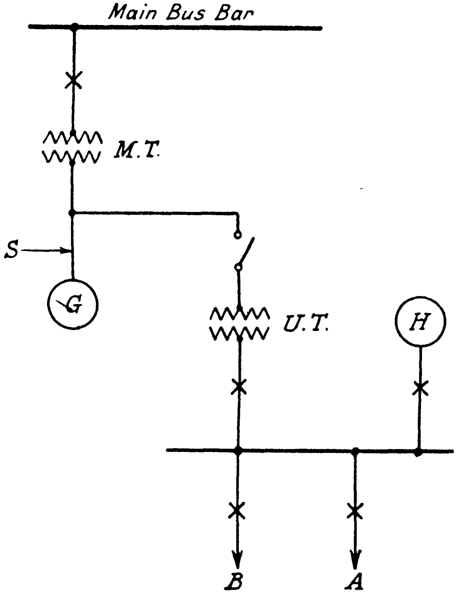

FIG. 166.

isolating switch at S, thereby enabling the unit transformer to be fed from the main busbars *via* the main transformer. The usual practice is, however, to install station service transformers to feed the boiler house and general auxiliaries and unit transformers for the generator auxiliaries, and thus the loss of the unit transformer, which occurs on the failure of the generator, is not material.

Scheme (*c*), which provides for an auxiliary A.C. generator mounted on the same shaft as the main generator, may be considered as an alternative to the unit transformer. It has the important advantage of being completely insulated from faults on the main system. The addition of this generator to the main set, however, has the effect of making a very long generating set, which adds seriously to the cost of the turbine house. Moreover, the auxiliary generator, owing to its greater complication, cannot be as reliable as a unit transformer.

Fire Precautions of Auxiliary System.—Since the auxiliaries are so important that any breakdown may involve the whole station output, fire precautions should receive the most careful consideration, especially as the relatively small size makes the cost permissible. Thus low-voltage metal-enclosed air-break switchgear is now used in ratings up to 50 MVA at 400 volts. Auxiliary transformers are being made in oilless designs either air insulated or with non-inflammable fillings such as pyranol. Auxiliary supplies are commonly operated with unearthed neutrals, so that an earth fault does not cause an immediate trip but only lights an indicating lamp.

Calculation of Short-circuit Currents.—The selection of circuit breakers for an electric power system obviously renders it necessary to obtain a reasonably accurate estimate of the short-circuit current which it will have to interrupt. It will be necessary for this purpose first to calculate the instantaneous symmetrical short-circuit current from the reactance (or impedance) of the circuit and then, using this value, to calculate the asymmetrical short-circuit current at the time at which the circuit breaker opens. The methods of calculation usually adopted for this purpose will now be considered in detail.

Calculation of Instantaneous Symmetrical Short-circuit KVA at Section Busbars—Star Design.—Assume the system to be a symmetrical one, i.e., both the generators connected to each busbar section and the busbar reactors have the same percentage reactance and kVA rating. This system is shewn in Fig. 167, in which the relevant portions of Fig. 158 have been extracted. Let A and B represent the percentage generator and busbar reactance respectively, and let K represent the rated kVA per busbar section, on which both A and B are based. Imagine, now, a short-circuit to occur on feeder F_1 near the busbars, then the instantaneous short-circuit kVA fed from G_1 to the short-circuit will be $\frac{100K}{A}$. If the circuit breakers connecting the busbar sections directly together, thereby short-circuiting the busbar reactors, be closed, then the short-circuit kVA will be $\frac{100K}{A} \times 4$. With N busbar sections, the short-circuit kVA will evidently be $\frac{100KN}{A}$. If, now, the busbar section switches are opened, thereby making effective the busbar reactors, the reactance available amongst generators 2, 3 and 4 and the star busbar is clearly $\frac{A+B}{3}$ since they are in parallel, or in the case of N busbar sections, $\frac{A+B}{N-1}$. The combined reactance of N sections to busbar section No. 1 will therefore be

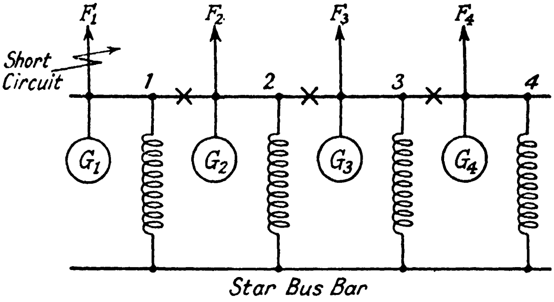

FIG. 167.

$$B + \frac{A+B}{N-1} = \frac{BN+A}{N-1}.$$

In parallel with this reactance is that of G_1, so that the resultant reactance to busbar section No. 1 will be :

$$= \frac{A\left[\frac{BN + A}{N - 1}\right]}{A + \frac{BN + A}{N - 1}} = \frac{A.\frac{BN + A}{N - 1}}{N.\frac{A + B}{N - 1}} = \frac{A}{N}.\frac{BN + A}{A + B}$$

Therefore the total short-circuit kVA of the system is

$$= \frac{100K}{\frac{A}{N}.\frac{BN + A}{A + B}} = \frac{100K(A + B)}{BN + A}.\frac{N}{A}$$

The ratio : $\dfrac{\text{Short-circuit kVA with busbar reactance}}{\text{Short-circuit kVA without busbar reactance}} = f$

where f is termed the short-circuit factor of the system, thus :

$$f = \frac{\frac{100K(A + B)N}{(BN + A)A}}{\frac{100KN}{A}} = \frac{A + B}{A + NB}.$$

Imagine, now, that a power station is initially equipped with (say) three busbar sections, and it is intended to extend it by adding additional sections. Let K_1 represent the short-circuit kVA per section, then

$$f = \frac{\text{short-circuit kVA with busbar reactance}}{NK_1} = \frac{A + B}{A + NB},$$

thus the short-circuit kVA with busbar reactance and N sections

$$= K_N = NK_1.\frac{A + B}{A + NB}$$

$$= K_1(A + B).\frac{N}{A + NB}$$

$$= K_1.\frac{A + B}{A}.\frac{N}{1 + N\frac{B}{A}}$$

If N is increased to (say) 8 or more sections, then $\dfrac{N}{1 + N}$ approaches a value of unity so that

$$K_N = \frac{K_1(A + B)}{A}.\frac{A}{B} = K_1\left[\frac{A + B}{B}\right].$$

If the ratio $\frac{A}{B} = 2$, then $\frac{A + B}{B} = 3$ and $K_N = 3K_1$. Thus it will be obvious that in the case of the star busbar design, the maximum value of the short-circuit kVA can be forecast and is independent of the magnitude of extensions. This is evidently a matter of considerable importance, since circuit breakers for the final breaking capacity can be installed initially, thus avoiding the necessity for replacements and reorganization as the station is extended. Fig. 168 shews the ratio of busbar reactance to generator reactance plotted against the short-circuit factor f as base with the number of sections as a parameter for the curves. The short-circuit kVA which would be liberated at the section busbars if the busbar reactors were short-circuited is regarded as 100 per cent and represented by unity on the abscissa, so that the curves shew how much the short-circuit kVA is reduced as the busbar reactance B is increased. For example, in the case of a system having

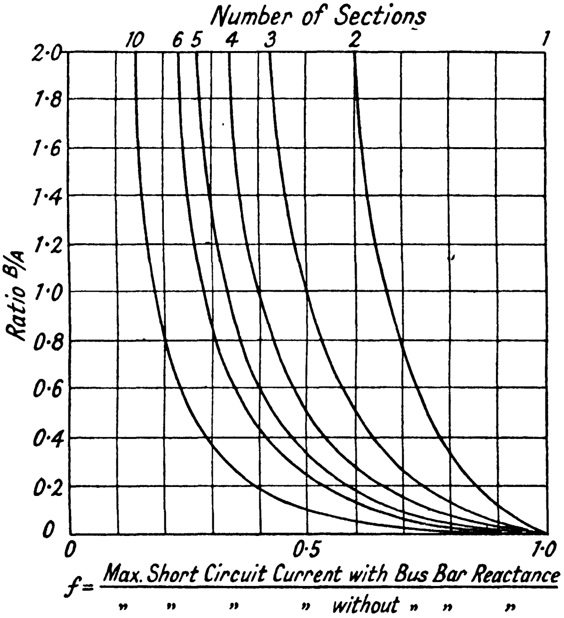

[*Journal I.E.E.*

FIG. 168.

four busbar sections and star-connected reactors, each equal to half the generator reactance, i.e., ratio $\frac{B}{A} = 0{\cdot}5$, the short-circuit kVA would be reduced to half. It will be evident from the curves that the introduction of small values of busbar reactance is very effective in reducing the short-circuit kVA, but as the busbar reactance is further increased, the slope of the curves increases so that there will clearly be an economic limit for a given number of busbar sections beyond which it will not be advisable to go. It will also be seen that as the number of sections is increased, the effectiveness of busbar reactance increases more than proportionately. Thus with 10 sections and a ratio $\frac{B}{A} = 0{\cdot}5$, the short-circuit kVA is reduced to one-quarter. The reason for this will be clear since it has been shewn above that, in the case of the star design, when a station is extended by adding to the number of sections, the value of the short-circuit kVA does not increase in the same proportion as the increase in rated kVA.

Ring Design.—Fig. 169 gives a similar set of curves for

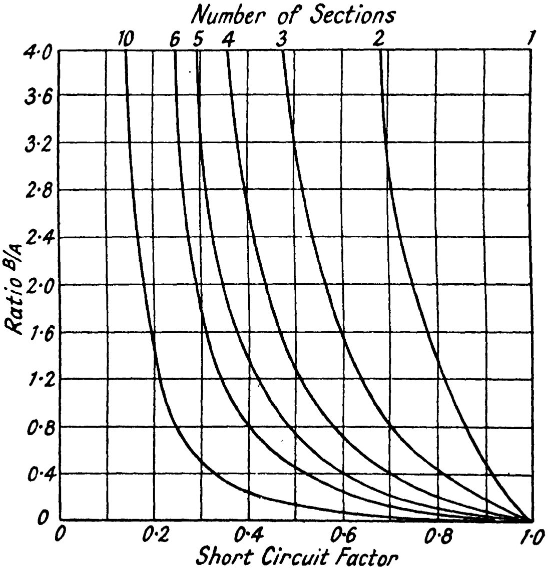

[*Journal I.E.E.*

FIG. 169.

the ring design, but it will be remembered that, in this case, the kVA is fed to a receiving busbar section from both sides of the ring, i.e., through two reactors in parallel, so that the ohmic value of each reactor must be approximately doubled to afford the same degree of protection as in the case of the star design. Consequently, the ordinate scale has been doubled. With this difference, the two sets of curves are very similar. The cost of reactors for the ring design will thus be greater than for the star scheme.

Complex Systems.—When the generators and busbar reactors have different kVA ratings and reactances, the problem may become very complicated. For instance, if the percentage reactances of the machines differ and they are running at (say) full-load, their generated voltages will be different and this must be taken into account in an exact analysis of the effects of a short-circuit. But these differences of the generated voltages only produce second order effects and these may, for practical purposes, be neglected. In solving such problems it is necessary to reduce all percentage reactance values to a common kVA base in order that the reactances may be added arithmetically. The resistance of the short-circuit path can safely be ignored except where such is comparable with the reactance. For example, if the resistance is one-third of the reactance or less, the error incurred by ignoring the former will be 5 per cent. or less. All synchronous machines, such as motors and convertors, connected to the system will feed into the short-circuit for a short period and consequently these machines should be treated as generators. The required data are the number, kVA, resistance, reactance, arrangement and voltage of the generators, transformers, cables and other system connexions.

Straight Busbar.—Fig. 170 shews a system with one

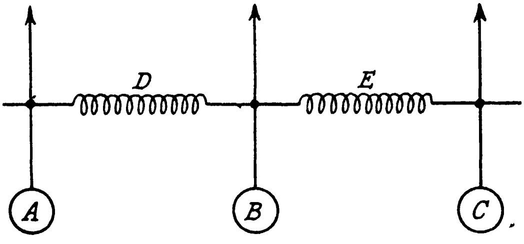

FIG. 170.

generator per busbar section, the sections being separated by busbar reactors. The ratings and reactances of the generators and busbar reactors are as follows :

	MVA Rating.	Per Cent Reactance at Rated MVA.	Per Cent Reactance at 100 MVA.
Generator A	30	10	33·3
Generator B	50	15	30
Generator C	75	20	26·67
Busbar Reactor D . . .	50	7·5	15
Busbar Reactor E . . .	75	7·5	10

Choosing 100 MVA as the base for the purpose of calculation, the reactances are converted thereto by multiplying the percentage reactance at the rated MVA by the ratio $\frac{100 \text{ MVA}}{\text{rated MVA}}$, and these values are given in the final column.

Imagine first that the busbar reactors are short-circuited, so that the generator reactances are directly paralleled. The resultant reactance will be found from :

$$\frac{1}{X} = \frac{1}{X_a} + \frac{1}{X_b} + \frac{1}{X_c}$$

$$= \frac{1}{33 \cdot 3} + \frac{1}{30} + \frac{1}{26 \cdot 67}$$

$$= 0 \cdot 03 + 0 \cdot 033 + 0 \cdot 037$$
$$= 0 \cdot 1.$$

Thus the reactance is 10 per cent and the instantaneous symmetrical short-circuit MVA will be $\frac{100}{10} \times 100 = 1{,}000$ MVA.

If, now, the reactors D and E are included, it will be convenient to prepare a set of reactance diagrams for the conditions of short-circuits occurring on busbar sections A, B and C respectively. This has been done in Fig. 171. Since the generator neutrals are all at the same potential, they may be assumed to be connected together. Imagine first a short-circuit to occur on busbar section A; the resultant reactance between the neutral and busbar B is evidently

$$\frac{30 \times 36{\cdot}65}{30 + 36{\cdot}65} = 16{\cdot}5 \text{ per cent,}$$

and between the neutral and busbar A

$$= \frac{(16{\cdot}5 + 15) \times 33{\cdot}3}{16{\cdot}5 + 15 + 33{\cdot}3} = 16{\cdot}2 \text{ per cent.}$$

The instantaneous symmetrical short-circuit MVA will be $100 \times \frac{100}{16{\cdot}2} = 618$, and if the busbar voltage is 33 kV, the instantaneous short-circuit current

$$= \frac{618 \times 1{,}000}{\sqrt{3} \times 33} = 10{,}800 \text{ R.M.S. amperes.}$$

Turning now to the case of a short-circuit occurring on section busbar B, it will be evident from Fig. 171 that there are three paralleled groups of reactances. Thus the resultant reactance will be found from:

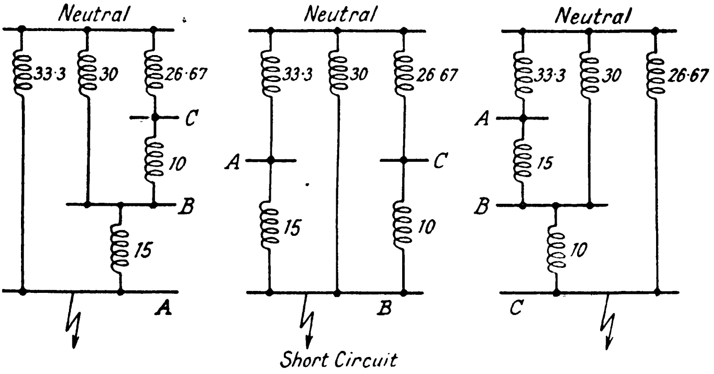

FIG. 171.

$$\frac{1}{X} = \frac{1}{48{\cdot}3} + \frac{1}{30} + \frac{1}{36{\cdot}67}$$

$$= 0{\cdot}0207 + 0{\cdot}0333 + 0{\cdot}0273 = 0{\cdot}0813$$

and $$X = \frac{1}{0{\cdot}0813} \text{ or } 12{\cdot}3 \text{ per cent.}$$

The results are given below:

Short-circuit on Busbar Section.	Reactance at 100 MVA.	Instantaneous Symmetrical Short-circuit, MVA.
A	16·2	618
B	12·3	814
C	13·8	725
With no busbar reactance	10	1,000

It will be noticed that the smallest MVA is liberated at A, since A is the smallest generator and B is the largest busbar reactor. Despite the fact that C is the largest generator, the largest MVA is liberated at B. This is because in the case of a short-circuit on section B, the busbar reactors operate more in parallel than in series.

Star Busbar.—Fig. 172 shews the generators of Fig. 170 feeding into a star-connected busbar system. The busbar reactors A, B and C have the same MVA ratings as their respective generators, their reactance values all being 7·5 per cent. Taking 100 MVA as base, therefore, the busbar reactances are 25, 15 and 10 per cent respectively. The equivalent circuits for short-circuits respectively on busbar sections A, B and C are given in Fig. 173. Taking the case of a short-circuit occurring on busbar section A, the reactance groups between the neutral and the star busbar reduce to $\frac{45 \times 36·65}{45 + 36·65} = 20·2$ per cent, and in series with this is the 25 per cent reactor between the star busbar and busbar section A. Thus the

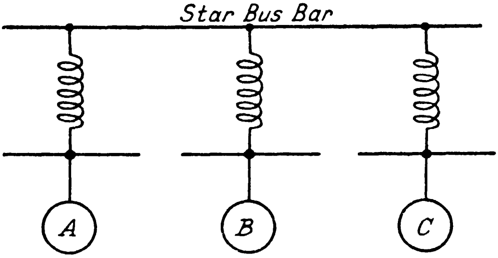

Fig. 172.

reactance between the neutral and busbar section A will be

$$\frac{33{\cdot}3 \times (20{\cdot}2 + 25)}{33{\cdot}3 + 20{\cdot}2 + 25} = 19{\cdot}2 \text{ per cent,}$$

and the instantaneous symmetrical short-circuit MVA

$$= \frac{100 \times 100}{19{\cdot}2} = 520,$$

and the corresponding short-circuit current, assuming a voltage of 33 kV

$$= \frac{520 \times 1{,}000}{\sqrt{3} \times 33} = 9{,}100 \text{ R.M.S. amperes.}$$

Similar calculations for short-circuits on busbar sections B and C give 600 and 339 MVA and 10,500 and 5,930 R.M.S. amperes respectively, corresponding to reactances of 16·65 per cent and 29·5 per cent.

A comparison of the equivalent reactance diagrams of Figs. 171 and 173 will shew that in cases A and C the diagrams are very similar, but in Fig. 173 the extra reactance is inserted in series with generator B. In the case of a short-circuit on busbar section B, it will be evident the star design affords better protection.

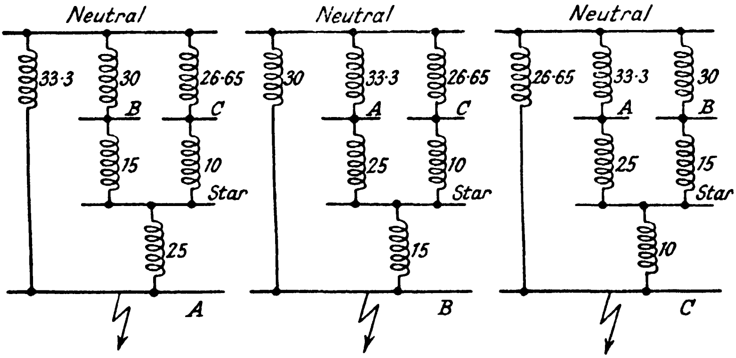

FIG. 173.

Closed Ring Busbar.—Fig. 174 shews four generators, each connected to separate busbar sections, the latter forming a closed ring. The data relating to this scheme are as follows :

Generator.	MVA Rating.	Reactor.	MVA Rating.
A	30	E	20
B	40	F	20
C	50	G	40
D	60	H	40

The generators and busbar reactances are 20 per cent and 15 per cent respectively, based in all cases upon their MVA ratings. Choosing a common base of 100 MVA, their reactances become :

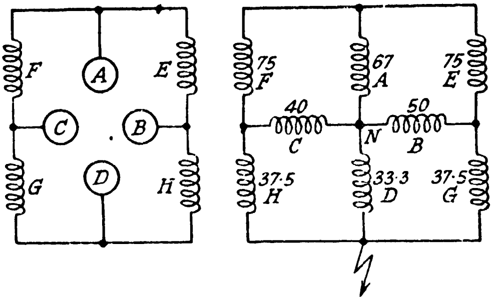

Fig. 174.

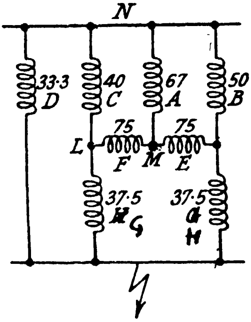

Fig. 175.

Generator.	Per Cent Reactance.	Busbar.	Per Cent. Reactance.
A	67	E	75
B	50	F	75
C	40	G	37·5
D	33·3	H	37·5

Imagine a short-circuit to occur on the busbar section to which generator D is connected, then the equivalent reactance diagram is as given in Fig. 175, in which N represents the neutral point of the generators. It will be evident that the reactances F, A and C form a delta connexion, and in order to solve it will be convenient to reduce this part of the network to an equivalent star connexion. Referring to Fig. 176, which shews the delta connexion FAC extracted from Fig. 175, let PQR represent the equivalent star connexion in which the measured reactances between any pair of terminals must be

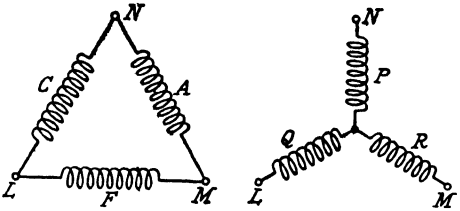

FIG. 176.

the same as between corresponding terminals of the delta. Taking the terminals LN, since C is in parallel with A + F, then

$$\frac{C(A + F)}{F + A + C} = P + Q.$$

Similarly,
$$\frac{F(A + C)}{F + A + C} = Q + R$$

and
$$\frac{A(C + F)}{F + A + C} = P + R.$$

Now
$$2P = (P + Q) + (P + R) - (Q + R)$$
$$= \frac{2AC}{F + A + C}$$

therefore
$$P = \frac{AC}{F + A + C}.$$

Similarly
$$Q = \frac{FC}{F + A + C}$$

and
$$R = \frac{AF}{F + A + C}.$$

Since
$$A = 67$$
$$C = 40$$
$$F = 75$$

$$P = \frac{67 \times 40}{182} = 14{\cdot}7$$

$$Q = \frac{75 \times 40}{182} = 16{\cdot}4$$

$$R = \frac{67 \times 75}{182} = 27{\cdot}6.$$

The star group PQR is now substituted for the delta group

CAF and the impedance diagram of Fig. 175 now becomes as Fig. 177, the right-hand diagram being a further and obvious simplification. It will be evident that a further delta-star conversion is now necessary. Again making use of Fig. 176,

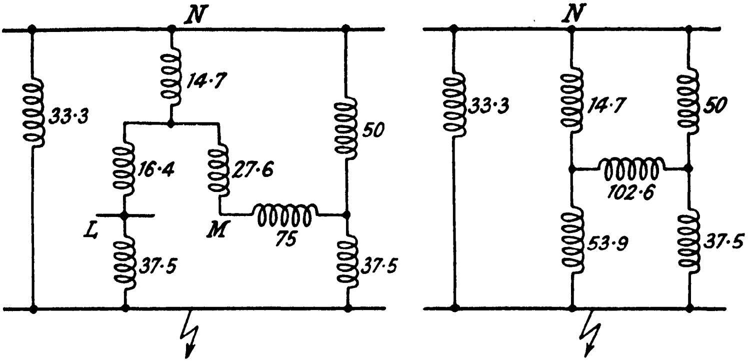

FIG. 177.

$$C = 14{\cdot}7,\ A = 50 \text{ and } F = 102{\cdot}6,$$

$$\text{then } P = \frac{50 \times 14{\cdot}7}{167{\cdot}3} = 4{\cdot}4$$

$$Q = \frac{102{\cdot}6 \times 14{\cdot}7}{167{\cdot}3} = 9{\cdot}0$$

$$\text{and } R = \frac{50 \times 102{\cdot}6}{167{\cdot}3} = 30{\cdot}6.$$

Inserting these values, Fig. 177 now becomes as Fig. 178,

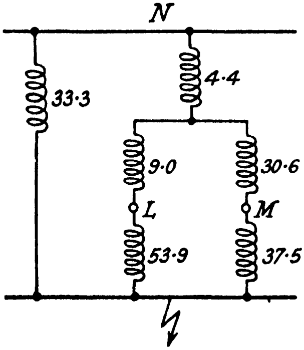

FIG. 178.

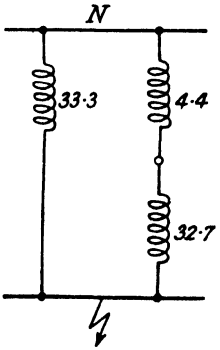

FIG. 179.

while solving for the two parallel circuits gives Fig. 179. Finally, the reactance up to the short-circuit is

$$\frac{33{\cdot}3 \times (4{\cdot}4 + 32{\cdot}7)}{33{\cdot}3 + 4{\cdot}4 + 32{\cdot}7} = 17{\cdot}5 \text{ per cent.}$$

The method of calculation, although here applied to the solution of a ring busbar system, will obviously also be suitable for the solution of network problems where resistance can be ignored. When such is not the case, complex algebra must be employed.

Protection of Switchgear by Reactors.—When a generating station of moderate size is interconnected with a large system, a short-circuit occurring on one of its feeders or other apparatus will be correspondingly more severe so that the switchgear, not having been designed for the more onerous duty, may be deemed incapable of operating under this condition. The usual solution is to interconnect the two systems through a reactor, as shewn in Fig. 180.

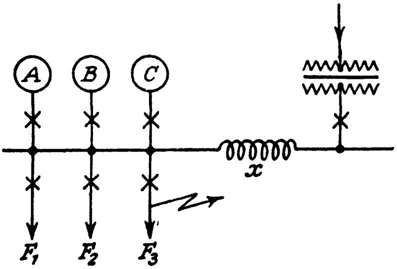

Fig. 180.

As an example, suppose the switchgear connected to the busbars of the generating station is rated at 500 MVA, the reactor x has to be dimensioned for this condition. Particulars of the plant are given below :

	Rated M.VA.	Per cent Reactance on Rated MVA.
Generator A	5	5
Generator B	7·5	7·5
Generator C	10	10
Interconnector transformer .	20	5

Choosing a base of 10 MVA, all the generator reactances become 10 per cent and the transformer reactance 2·5 per cent. The resultant reactance of the generating plant is therefore

$\frac{10}{3} = 3{\cdot}33$ per cent, and the instantaneous symmetrical short-circuit MVA before interconnexion $= \frac{100}{3{\cdot}33} \times 10 \overset{\checkmark}{=} 300$ MVA, which is below the rating of the circuit breakers. The interconnecting transformer will supply a short-circuit MVA of $\frac{100}{2{\cdot}5} \times 10 = 400$ MVA, so that without the reactor x, the total short-circuit MVA would be $400 + 300 = 700$. To keep the MVA down to 500, it is evident that the MVA supplied by the transformer must not exceed 200, so that its total reactance will have to be $\frac{10}{200} \times 100 = 5$ per cent. Since the transformer has an inherent reactance of 2·5 per cent, the coil x will also have a reactance of 2·5 per cent, as x is in series with the transformer.

If the busbar voltage is 6,600, the reactance of the coil x, in ohms, will be

$$= \frac{2{\cdot}5 \times 6{,}600}{\mathrm{I} \times \sqrt{3} \times 100}$$

where I is the current corresponding to 10 MVA and

$$= \frac{10 \times 10^3}{\sqrt{3} \times 6{\cdot}6} = 875 \text{ A.}$$

$$\therefore \text{ reactance} \quad = \frac{2{\cdot}5 \times 6{,}600}{875 \times \sqrt{3} \times 100} = 0{\cdot}109\ \Omega$$

and the inductance at 50 frequency

$$= \frac{109}{314} = 0{\cdot}347 \text{ millihenry.}$$

Symmetrical Three-phase Short-circuits.—In all the examples, symmetrical three-phase short-circuits have been assumed, since this represents the most severe condition upon which, of course, the selection of circuit breakers must be based. Resistance has been ignored in order to facilitate ease of calculation, and this is permissible since its neglect gives MVA values which are on the high, and therefore on the safe side.

Experimental Determination of Short-circuit MVA.—It will clearly be necessary to estimate the short-circuit MVA liberated at any point in an interconnected network in order to confirm whether an existing breaker is adequate for its duty, particularly after network changes or extensions, or in order to decide upon the correct rating for a new breaker. Due to the size and complexity of modern networks, such calculations are very involved and onerous, especially when they have to be made frequently, and accordingly experimental methods have been developed which rapidly give approximate solutions. Having regard to all the factors entering into short-circuit calculations, it will be evident that an approximate solution will be adequate for the purpose of circuit breaker selection.

The apparatus usually employed consists of a number of variable resistors which by interconnexion can be made to simulate in magnitude and arrangement the actual A.C. network. The resistance value of each resistor can be made to correspond to the reactance of each member of the network, or if the ratio of reactance to resistance is approximately equal in all the network branches, it will be more accurate to simulate impedances. D.C. voltages are impressed on the miniature network at all points where synchronous machines are installed. Since symmetrical three-phase short-circuits alone are to be considered, a single set of resistors is required to simulate a phase to neutral system, and the solution for this single-phase system is identical for all three phases.

When a set-up corresponding to a particular network has been completed, a short-circuit is made at the position of the circuit breaker which the investigation concerns. When the D.C. voltage is impressed on the network model, the short-circuit current can be obtained from instrument readings, and then converted, by means of appropriate proportionality constants, into the actual A.C. short-circuit current.

It is possible to employ the calculator for other problems by setting up in turn the positive, negative and, if necessary, zero phase sequence circuits, and finally compounding them.*

---

* It will be evident from a study of Fig. 39(c), in which positive and negative phase sequence components are compounded, that the resultant is always a closed triangle, the sides of which are A, B and C. If, however, an earth fault occurs on a system having an earthed star point, a fourth electrical path is thereby created, and the sum of the currents no longer equates to zero and these cannot therefore be represented by a closed triangle. The residual current through the earth fault is known as the " zero phase sequence component of the current," and the impedance of its path is termed the " zero phase sequence impedance." Similarly, the impedance of the path of the negative phase sequence current is termed the " negative phase sequence impedance."

While this simplest form of calculator is useful for the purpose of short-circuit calculations, the degree of accuracy obtainable is, naturally, not very high. More accurate calculators have been constructed in America consisting of resistances, inductances and capacitances and fed by alternating voltages, usually at a high frequency in order to keep down the sizes of the circuit components.

Determination of Asymmetrical Short-circuit Current.—It has been shewn previously that the short-circuit current decreases with respect to time, the value at a given instant depending upon the decrement of the symmetrical current and upon the power factor of the current path. After the symmetrical short-circuit current has been calculated by the methods already considered, the corresponding value at a given time from the inception of the short-circuit may be obtained from curves prepared by the British Standards Institution * and from which the data given in the following table have been extracted :

	Ratio $\frac{\text{Asymmetrical Current}}{\text{Symmetrical Current on First Half Cycle}}$							
	Up to 500 MVA.				Exceeding 500 MVA.			
	Power Factor.				Power Factor.			
Time in Seconds.	0·05	0·1	0·15	0·3 and above.	0·05	0·1	0·15	0·3 and above.
0·02	1·44	1·28	1·15	1·00	1·42	1·24	1·06	0·96
0·03	1·34	1·14	1·05	1·00	1·30	1·10	1·00	0·95
0·04	1·27	1·08	1·01	1·00	1·22	1·04	0·97	0·94
0·05	1·20	1·03	1·00	1·00	1·15	0·99	0·95	0·93
0·06	1·15	1·01	1·00	1·00	1·09	0·96	0·93	0·93
0·07	1·10	1·00	1·00	1·00	1·05	0·93	0·93	0·92
0·08	1·08	1·00	1·00	1·00	1·01	0·92	0·92	0·91
0·09	1·05	1·00	1·00	1·00	0·97	0·91	0·91	0·91
0·10	1·02	1·00	1·00	1·00	0·95	0·90	0·90	0·90
0·11	1·01	1·00	1·00	1·00	0·93	0·90	0·90	0·90
0·12	1·00	1·00	1·00	1·00	0·92	0·90	0·90	0·90
0·13	—	—	—	—	0·91	0·90	0·90	0·90
0·14	—	—	—	—	0·90	0·90	0·90	0·90
0·15	—	—	—	—	0·90	0·90	0·90	0·90
0·20	—	—	—	—	0·88	0·88	0·88	0·88

---

* See footnote on p. 190.

For circuit breakers with ratings not exceeding 500 MVA it is assumed that decrement of the symmetrical component of the short-circuit current can be neglected owing to the large MVA capacity of generators resulting from system interconnexion, and the high value of recovery voltage. For circuit breakers with ratings exceeding 500 MVA it is assumed that the symmetrical component of the short-circuit current falls to 90 per cent of its initial value in 0·1 second.

Taking the case of the straight busbar and a short-circuit occurring on busbar section A (see Fig. 171), it was found that the instantaneous short-circuit current was 10,800 R.M.S. amperes. Assuming the power factor to be 0·1, and a time of 0·1 second to elapse before the breaker opens, the asymmetrical short-circuit current will be $10{,}800 \times 0{\cdot}9 = 9{,}720$ R.M.S. amperes.

CHAPTER IX

INTERCONNEXION OF POWER STATIONS

Automatic Load Sharing.—If a number of power stations are interconnected, the manner in which they will share the network load amongst them will depend purely upon the governor settings and characteristics, since all stations must operate at the same electrical speed. The method of calculation of load sharing is precisely the same as in the case of a number of A.C. generators operating in parallel in the same station. Imagine two stations A and B to be connected in parallel. The generating plant connected to the busbars is 25,000 kW and 10,000 kW for A and B respectively. Let an additional load of 3,500 kW be connected to the combined system. Assume that both stations are adjusted to have the same no-load speed and that the speed-load characteristics are rectilinear. If, now, both stations have 3 per cent governor regulation, i.e., drop in speed between no-load and full-load, the division of this extra load will be directly proportional to their kW capacities. Let a and b respectively be the proportions of the 3,500 kW taken by A and B, then :

$$\frac{a}{b} = \frac{25{,}000}{10{,}000} = 2{\cdot}5$$

$$\therefore\ a = 2{\cdot}5\ b$$

$$a + b = 3{,}500$$

whence

$$a = 2{,}500 \text{ kW}$$

$$b = 1{,}000 \text{ kW.}$$

The above conditions are shewn in Fig. 181, and it will be evident that the drop in speed of the combined system due to the load will be 0·3 per cent.

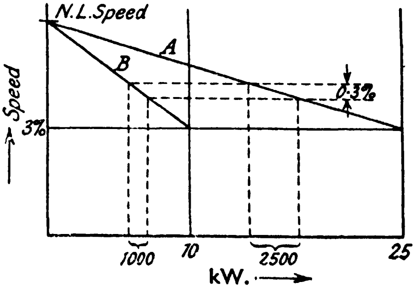

FIG. 181.

Now imagine the same conditions as before, but stations A and B to have governor regulations of 2 per cent and 4 per cent respectively. Since the stations will share the extra load in inverse proportion to their governor regulations, then

$$\frac{a}{b} = \frac{25{,}000}{10{,}000} \times \frac{4}{2} = 5$$

whence $a = 2{,}917$ kW

and $b = 583$ kW.

If, now, A and B have governor regulations of 4 per cent and 2 per cent respectively, then

$$a = 1{,}944 \text{ kW}$$
$$b = 1{,}556 \text{ kW}.$$

It will be evident from the above simple calculations that the stations could be made to share the combined load in any desired proportions by adjusting the governor settings. The second case represents a large station with fine governing in parallel with a small station with coarse governing, and it will be clear that the bulk of the load variations will be taken by the larger station. If the interconnector is of small kW capacity, i.e., designed to transmit a fraction only of station B's load, it may be difficult to keep the interconnector load within permissible limits, so that station governing must be considered in relation to the loading conditions of both stations and also to the interconnector capacity. It will obviously be unsatisfactory for station A to be compelled to take over the major portion of B's peak loads and the latter station would have to adopt finer governing.

In practice it is difficult to alter the setting of a governor. Too close governing may cause hunting. Governors are usually set to have 4 per cent drop (permanent) between no-load and full-load. This is probably a legacy from the time when the frequency was taken little notice of but had to comply with the Electricity Commissioners' stated tolerance of $\pm 2\frac{1}{2}$ per cent. The idea was that if the frequency was correct at half-load, the load could be varied between zero and full-load without exceeding the legal limits of frequency variation. This idea is now obsolete, as the frequency is continually supervised and controlled by hand adjustment and does not therefore vary appreciably with the system load. The adjustment is made by continually resetting the no-load speed so as to maintain the correct speed at all loads (i.e., the natural governor drop must be entirely compensated by hand), and to secure the desired division of load amongst the generators. For the same reason, different governor characteristics are also of little importance unless the load is of a violently fluctuating nature, i.e., fluctuations are of such a magnitude as to cause disproportionate loading of serious degree, and this condition is not a normal characteristic of a large interconnected system.

If the load conditions become abnormal, for example, if the load increases considerably beyond the anticipated value, the system operator may be unable to maintain constant frequency due to shortage of generating plant, or even because of the inability of the communication system to pass commands to remote power stations with sufficient rapidity. When this occurs, the system reverts to natural governor regulation and the static characteristics of the various governors obviously become of first-class importance, since they now determine the distribution of load.

It should be borne in mind that a demand for extra electrical load implies also a demand for extra steam supply from the boilers, and this must be reflected in an increase in the rate of firing. Thus the first result of an unexpected increase of load is the dropping of the boiler pressure, since the stoker regulates the firing with a view to maintaining constant pressure. In this respect, the boiler pressure is to the stoker what frequency is to the control engineer. Each indicates by its variation a change in load demand.

A consequence of the interdependence of boiler pressure and load is that operating conditions are liable to become chaotic if abnormal load increases occur. For this reason, attention has for some years been directed towards the development of automatic devices for the control both of the frequency and the boiler firing. So far the problem of automatic frequency control has not been satisfactorily solved, although examples of such equipment are now in service abroad. In this country, the interconnected system of the Central Electricity Board has hitherto been regulated entirely by hand in such a way as to maintain as nearly as possible correct synchronous time, utilizing a system which will now be described, and which has gone some way towards ensuring constant frequency. This system, however, must be regarded as merely a step towards the complete solution of the problem.

Controlled Frequency.—The method of operation now generally adopted in an interconnected system is that one station only at a time must be responsible for controlling the frequency throughout the area of supply, while the other stations adjust the generator governors so as to control the load in accordance with instructions received from the control engineer. It is evidently an important operating advantage to adopt a method of control which will ensure that the frequency is maintained at a dead accurate value throughout the system. A further advantage is that it becomes possible to give an electric time service of a high degree of accuracy to consumers, the device employed being a clock driven by a synchronous motor. Thus the mean frequency of supply must be exact, and this is effected by comparing the " electrical time " with standard time at frequent intervals. While the frequency *at any instant* cannot, of course, be maintained at a perfectly constant value, due to load variations, governor insensitivity and other causes, it is an easy matter to maintain constant the mean frequency, since the latter can be measured with reference to time to an accuracy of a few parts in one hundred thousand.

One method of frequency control utilizes an improved form of clock which is not loaded and is therefore more accurate. The clock is provided with two sets of hands, one driven at system frequency and the other by a master clock. The difference in time is kept within a few seconds by the operator. This method has been adopted in many control rooms of the Central Electricity Board as well as in most important power stations, and is shewn in Fig. 182. A " Warren " type synchronous motor energized from the supply drives the centre disc B, on which is marked a red line, through a gear and a long hollow spindle, the ratio of the gear being arranged so that the disc makes one revolution in three minutes when the frequency is exactly correct. The synchronous motor also drives the longer black pointer which is connected to a slipping clutch by means of a rod running freely inside the hollow spindle. The friction clutch carries a star wheel with twelve V-shaped depressions. The red line marked on the rotating disc gives a measure of the actual system frequency to a scale of time while the black pointer gives an indication of standard time, the mechanism being as follows. At each swing of the standard invar pendulum, the gathering pawl moves the gathering wheel forward by one tooth. When the gathering wheel has made one complete revolution, which it does in 30 seconds, the projecting metal finger moves the latch, thereby

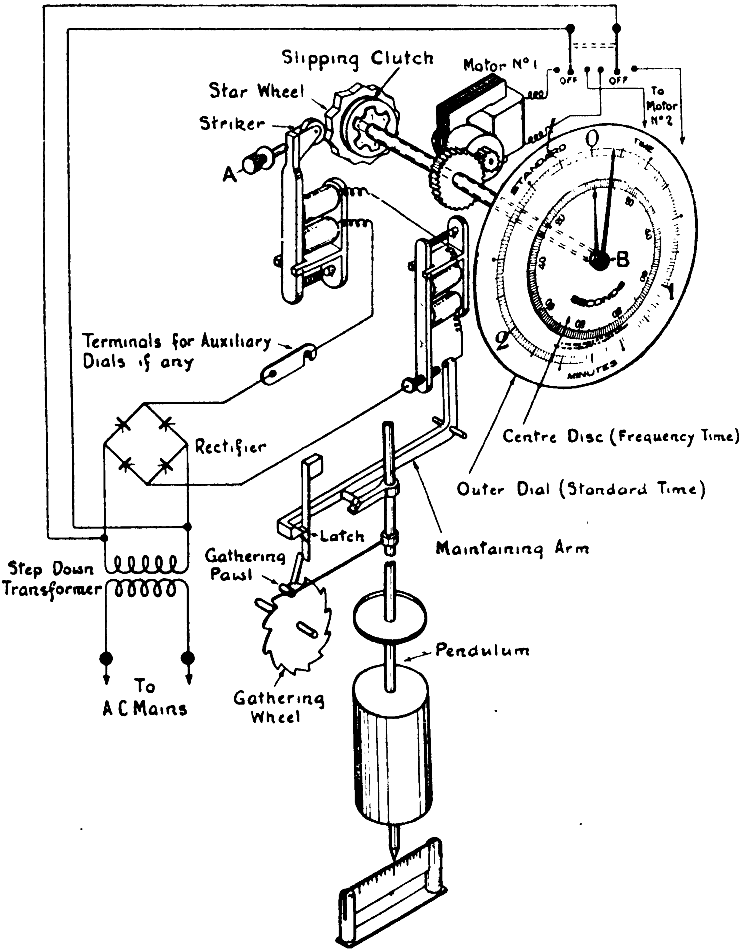

FIG. 182.

[*Everett Edgcumbe.*

permitting the maintaining arm to fall and by means of the pin on the latter which runs down the sloping face of the metal arm fixed to the pendulum rod, a mechanical impulse is imparted to the pendulum, sufficient to make up for the energy loss during the preceding 30 seconds. The maintaining arm is pivoted at its right-angle end and thus, in falling, closes the contact in the circuit of the two electromagnets. The armatures of both electromagnets are attracted and the front one lifts the maintaining arm up on the latch while the striker A of the rear electromagnet forces the roller into the depressions of the star wheel. If the frequency has been exactly correct during the preceding 30 seconds, the apex of the depression will be exactly opposite to the roller and the striker impulse will not deflect the black pointer. If, however, the frequency during this period has been too high or too low, the roller will strike one side or the other of the V-shaped depression, and forcibly bring the apex to the position opposite the striker by causing the clutch to slip. Of course, the black pointer is suddenly deflected by this movement and thus gives an indication of the deviation of the frequency time from standard time. The generator governors are, of course, adjusted to keep the two pointers as nearly as possible coincident.

Synchronizing Power of an Interconnector.—It has been shewn in the case of A.C. generators (see Chapter I) running in parallel, that when the operating conditions are disturbed, corresponding changes in the generator phase angles occur, and in these circumstances synchronizing currents act between the machines so as to keep them in step. Similarly, if two stations are interconnected, the interconnector must evidently be capable of carrying a sufficient value of synchronizing power to maintain the two stations in step when the operating conditions are disturbed. The actual value of synchronizing power required will depend upon the desynchronizing forces, which latter depend upon the magnitude and severity of the load fluctuations and also upon the moments of inertia of the rotating masses in both stations. While these variables are not, of course, determinable from mathematical calculations (since load changes cannot be expressed in terms of simple mathematical functions), a general guide as to the required value of synchronizing power is that the latter must not be less than the total capacity of the plant in the smaller station. Tests carried out both in England and in America confirm this figure. It is therefore necessary to develop a formula connecting synchronizing power per unit angle of phase displacement with the interconnector (including transformers) constants.

Calculation of Synchronizing Power.*—Referring to the vector diagram given in Fig. 183, which is drawn for the condition of station A transmitting a current of I amperes at a power factor $\cos \phi_b$ to station B, the synchronizing power of an interconnector may be defined as follows :

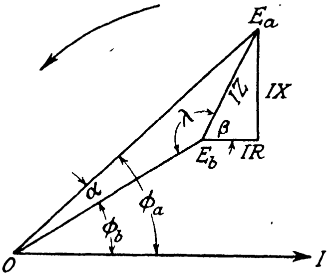

FIG. 183.

> "The amount of additional power which will flow through the line when the phase angle between the station voltages is displaced by a definite angle θ from the stable angle α necessary to transmit the energy forced through the line by the prime movers driving the generators."

Let P_s be the power in watts delivered to the sending end.
P_r ,, ,, ,, ,, ,, ,, ,, receiving end.
E_a ,, ,, phase voltage at the sending end.
E_b ,, ,, ,, ,, ,, receiving end.
α ,, ,, ,, angle between E_a and E_b.
X ,, ,, reactance in ohms per conductor ⎫
Z ,, ,, impedance ,, ,, ,, ⎬ in the interconnector, transformers included.
R ,, ,, resistance ,, ,, ,, ⎭
I ,, ,, interconnector current.
$\cos \phi_a$,, ,, power factor at the sending end.
$\cos \phi_b$,, ,, ,, ,, ,, receiving end.

$$P_r = 3E_bI \cos \phi_b = \frac{3E_b}{Z}.IZ \cos \phi_b$$

since
$$IZ = E_a.\frac{\sin \alpha}{\sin \lambda},$$

$$P_r = \frac{3E_bE_a}{Z}.\frac{\sin \alpha}{\sin \lambda} \cos \phi_b.$$

Now
$$\phi_b = \beta - (180^\circ - \lambda)$$
and
$$\begin{aligned} \cos \phi_b &= \cos [\beta - (180^\circ - \lambda)] \\ &= \sin \beta \sin \lambda - \cos \beta \cos \lambda \end{aligned}$$

---

* See Bibliography Reference No. 55.

Substituting, $$\mathrm{P}_r = \frac{3\mathrm{E}_a\mathrm{E}_b}{\mathrm{Z}}\cdot\frac{\sin\alpha}{\sin\lambda}[\sin\beta\sin\lambda - \cos\beta\cos\lambda]$$

$$= \frac{3\mathrm{E}_a\mathrm{E}_b}{\mathrm{Z}}.\sin\alpha[\sin\beta - \cos\beta\,\mathrm{cotan}\,\lambda]$$

But $$\mathrm{cotan}\,\lambda = \frac{\mathrm{E}_b - \mathrm{E}_a\cos\alpha}{\mathrm{E}_a\sin\alpha}$$

$$\sin\beta = \frac{\mathrm{X}}{\mathrm{Z}},\quad \cos\beta = \frac{\mathrm{R}}{\mathrm{Z}}$$

$$\therefore\ \mathrm{P}_r = \frac{3\mathrm{E}_a\mathrm{E}_b}{\mathrm{Z}}\sin\alpha\left[\frac{\mathrm{X}}{\mathrm{Z}} - \frac{\mathrm{R}}{\mathrm{Z}}\cdot\frac{\mathrm{E}_b - \mathrm{E}_a\cos\alpha}{\mathrm{E}_a\sin\alpha}\right]$$

$$= \frac{3\mathrm{E}_a\mathrm{E}_b}{\mathrm{Z}^2}\left[\mathrm{X}\sin\alpha + \mathrm{R}\cos\alpha - \mathrm{R}.\frac{\mathrm{E}_b}{\mathrm{E}_a}\right] \quad . \quad (1)$$

Similarly,

$$\mathrm{P}_s = \frac{3\mathrm{E}_a\mathrm{E}_b}{\mathrm{Z}^2}\left[\mathrm{X}\sin\alpha - \mathrm{R}\cos\alpha + \mathrm{R}.\frac{\mathrm{E}_a}{\mathrm{E}_b}\right] \quad . \quad . \quad . \quad (2)$$

If the phase angle α be increased to $\overline{\alpha + \theta}$ then,

$$\mathrm{P}_r = \frac{3\mathrm{E}_a\mathrm{E}_b}{\mathrm{Z}^2}\left[\mathrm{X}\sin(\alpha+\theta) + \mathrm{R}\cos(\alpha+\theta) - \mathrm{R}.\frac{\mathrm{E}_b}{\mathrm{E}_a}\right]. \quad (3)$$

and $$\mathrm{P}_s = \frac{3\mathrm{E}_a\mathrm{E}_b}{\mathrm{Z}^2}\left[\mathrm{X}\sin(\alpha+\theta) - \mathrm{R}\cos(\alpha+\theta) + \mathrm{R}.\frac{\mathrm{E}_a}{\mathrm{E}_b}\right]. \quad (4)$$

Subtracting (1) from (3) gives the increase of P_r

$$= \frac{3\mathrm{E}_a\mathrm{E}_b}{\mathrm{Z}^2}[\mathrm{X}\sin(\alpha+\theta) + \mathrm{R}\cos(\alpha+\theta) - \mathrm{X}\sin\alpha - \mathrm{R}\cos\alpha]$$

Subtracting (2) from (4) gives the increase of P_s

$$= \frac{3\mathrm{E}_a\mathrm{E}_b}{\mathrm{Z}^2}[\mathrm{X}\sin(\alpha+\theta) - \mathrm{R}\cos(\alpha+\theta) - \mathrm{X}\sin\alpha + \mathrm{R}\cos\alpha].$$

Now increase of P_s minus increase of P_r gives the increase of line losses.

$$= 6\mathrm{R}.\frac{\mathrm{E}_a\mathrm{E}_b}{\mathrm{Z}^2}[\cos\alpha - \cos(\alpha+\theta)].$$

The increase of P_s after deducting half the increase of line losses gives the synchronizing power W_s available at the centre point of the line.

$$\mathrm{W}_s = \frac{3\mathrm{X}}{\mathrm{Z}^2}\mathrm{E}_a\mathrm{E}_b[\sin\overline{\alpha+\theta} - \sin\alpha] \text{ watts}$$

for a three-phase interconnector.

W_s is, therefore the *extra power* which the line will transmit when the load angle α increases to $\alpha + \theta$. It is clear that when $\theta = 0$ degrees, there is no extra power, hence W_s is zero. The maximum value of W_s (i.e., the limit of stability) is obtained when $\alpha + \theta = 90$ degrees. The vectors E_a and E_b are then at right angles and the power transmitted is $\frac{3X}{Z^2} \cdot E_a E_b$.

The formula refers only to the interconnector, that is, so long as the busbar voltages at the two stations are maintained constant, then for given conditions of load, the synchronizing power which will act between the two stations will depend purely upon the displacement angle θ and the resistance and reactance of the interconnector.

It must clearly be understood that with a *fixed* angular displacement α between the two busbar voltages, there will be no synchronizing power since there is no *variation* of the angular displacement; under this stable condition, power is transferred through the interconnector and thence to the utilization network where it is absorbed in the load. If, now, the demand from the network connected to station B's busbars suddenly increases, the generators operating in this station will fall back in phase thereby increasing the angle α. Due to their moments of inertia, the rotors of these generators will overshoot their correct position corresponding to the new load conditions. Immediately the overshooting begins, additional power is transferred across the interconnector. This additional power is not absorbed by the load connected to station B's busbars and it must therefore flow in the windings of the generators in this station, and will thus arrest the de-celeration of the rotors, tending to swing them back into phase with the rotors of the generators operating in station A. As the rotors of the machines in station B accelerate, overswinging will again occur and thus oscillations of power are carried by the interconnector and these continue until damped out when the generators run steadily at synchronous speed again. These power oscillations represent true synchronizing power and the latter clearly has nothing whatever in common with power transmitted for utilization purposes. If, however, the interconnector were incapable of transmitting sufficient synchronizing power, the stations could not be operated in parallel unless the load conditions were very steady.

It will be evident from the formula for synchronizing power that if the reactance of the interconnector was zero, the synchronizing power would be zero and it would not be possible to operate the two stations in parallel. Reactance in this connexion serves the same purpose as elasticity in a mechanical coupling, it being well known that power can only be transmitted from one machine to another by virtue of the elasticity of the coupling between the two.

Effect of Voltage upon Load Transference.—There are obviously three conditions of voltage under which load may be transferred between two stations along an interconnector; the station voltages may be constant and either equal or unequal or the station voltages may be varied with the load, either by alteration of the busbar voltages or by the introduction of an independent voltage boost into the interconnector. It will be necessary to examine these three conditions in some detail since they have an important influence upon system operation.

Voltages Constant and Equal.—In Fig. 184 let OI represent the current transmitted from station A to station B. Referring first to the dotted portion of the diagram, let E_a' and E_b' be the voltages at the interconnector sending and receiving ends respectively. E_a' leads E_b' by the angle α, so that their difference, $E_a' - E_b'$ is the voltage tending to drive current from A to B. This difference must be IZ, made up of its two components IR and IX, directed as indicated. It

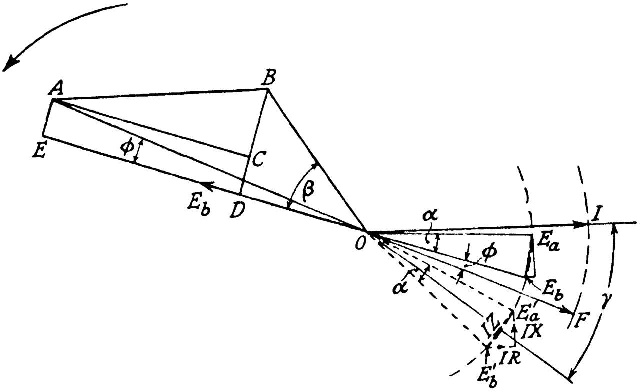

FIG. 184.

will be evident that the voltage IR must be parallel to the current OI and a little consideration will shew that since E_a' and E_b' are equal, the current must lead both voltages unless the resistance of the interconnector is very small compared with its reactance, so that load can only be transmitted at a leading power factor. The power factors at the sending and receiving ends are respectively $\cos \widehat{E_a'OI}$ and $\cos \widehat{E_b'OI}$, and the mean power factor is $\cos \gamma$. It is shewn below that the mean power factor remains constant, and so when the load varies, the sending and receiving end power factors will vary in opposite directions but these variations will be small, sufficient only to lengthen the vector IZ for the accommodation of the change in the current OI. Since the bisector of OE_a' and OE_b' is perpendicular to IZ and IX is perpendicular to OI, the angle between IZ and IX is γ and hence γ, the mean angle of lead, is $\arctan \frac{R}{X}$; thus the mean power factor may be made to approach unity by making the reactance large, as shewn by the impedance triangle associated with the vectors OE_a and OE_b.

It is probable that the receiving station would be unable to accommodate a supply at a leading power factor unless arrangements were available to provide the lagging reactive current. Referring to the left-hand part of Fig. 184, the receiving end voltage, E_b, is shewn in the opposite sense to E_a for the reason that with respect to the interconnector they are in opposition, OA represents in value and phase the total load current supplied to the network feeders connected to the busbars of station B, and OE and EA represent the active and reactive components of OA respectively, so that the power factor of this load is $\cos \phi$. Let $AB(= OI)$ be the current received by the busbars of station B from the interconnector so that the resultant of OA and AB is OB, the current delivered by station B's generators to the busbars. Clearly these generators must supply an active current equal to $OE - AC = OE - DE = OD$ and a reactive current $BD = AE + BC$. The current AE represents the magnetizing current required by B's load and BC the reactive current received from station A. Due to the reduced active current and increased reactive current, the generators in station B will operate at a power factor of $\cos \beta$ which is lower than $\cos \phi$, the load power factor. Unless these generators are provided with ample field ampere-turns and correspondingly large exciters, they may be unable to maintain their rated voltage, while their kW ratings will be reduced and the efficiency will suffer by reason of the higher copper losses. For these reasons no station operating on an interconnected system should be required to carry this excessive reactive kVA. If the leading power factor of the interconnector is increased, then the vector AB can be imagined to rotate in a counter-clockwise sense about the point A, so that the reactive kVA received by station B (i.e., BC) will be increased still further.

Station A will, in general, benefit by transmitting energy to station B at unity or leading power factor since this supply will help to improve the power factor of station A's generators. However, if the load power factor of station B is to remain unchanged at cos ϕ, then energy must be put into the interconnector at station A at a power factor of $\cos \overline{\alpha + \phi}$, i.e., the current will be represented by OF, when station A will be supplying station B with its correct proportions of kilowatts to reactive kilovars.

Transmission with fixed and equal voltages clearly has a restricted sphere of utility ; if means are available at station B, such as sufficiently large generators provided with large and stable exciters, or alternatively static or synchronous condensers, for controlling the reactive kVA represented by BC, the method would be quite satisfactory. If the transmission were required in both directions, that is from A to B and from B to A at will, such means would have to be provided in both stations, and from the viewpoint of energy exchange, such a scheme would be ideal since the flow of energy could be reversed at short notice without disturbing the operating conditions at either station. The phase of the voltage of station A would be advanced and that of station B retarded so that in Fig. 184, the vectors E_a and E_b would change places. A disadvantage to this scheme would be the increase of short-circuit capacity due to the synchronous condenser feeding into the fault and particularly the increased cost.

It is necessary to emphasize that kW is produced by the prime mover and reactive kVA, lagging or leading, by the exciter. As far as the generators in the receiving station are concerned, there is no difficulty in varying the reactive kVA over any range desired, except stator heating and exciter size and stability. If the generators are able to operate under the required conditions, there is no necessity to provide additional plant for dealing with reactive kVA. Usually the problem of providing reactive kVA arises with existing plant which has been designed for too restrictive conditions and will not carry a low enough lagging power factor without overheating or overloading the exciter. The main virtue of the synchronous condenser is that it is specifically designed for the purpose of generating reactive kVA, i.e., it is provided with a large exciter stable over a wide range.

Voltages Constant and Unequal.—Fig. 185 shews this condition in which E_a is greater than E_b, and IZ again is the voltage difference between the two ends of the interconnector. Since the length of IZ is proportional to current and the magnitudes of E_a and E_b are fixed, it follows that as the load varies, the power factor of the transmitted current will vary between wide limits, so that the method is only suitable for transmitting a fixed load in one direction. In many cases the two voltages are fixed by local requirements at certain values and must be maintained at these values. It will be obvious that when the load is reduced to zero, i.e., the angle α is zero, the vector IZ will be the arithmetical difference between E_a and E_b and the current will lag behind E_a by the natural interconnector angle β and lead the voltage at the receiving end (i.e. $-E_b$) by $180° - \beta$. Under this condition, should the interconnector be switched out, thereby separating the two stations, the voltage of the generators in station A, being heavily excited, will tend to rise and the generators in B, having weak excitation, will tend to fall rapidly. Consequently, if the difference between E_a and E_b is large and the ratio of reactance to resistance of the interconnector high, some means of injecting a voltage into the interconnector, such as a series voltage regulator, would be necessary to equalize E_a and E_b

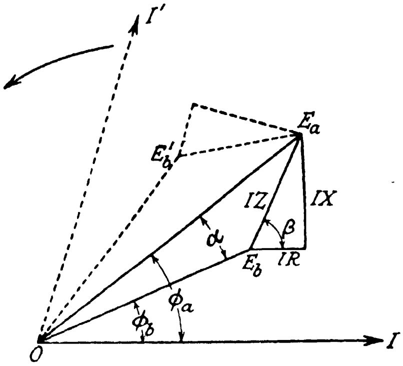

FIG. 185.

and thereby suppress the lagging no-load current so that the interconnector could be switched out without disturbance to the operating conditions. The dotted vectors of Fig. 185 shew the conditions under which a reversal of power could be given. The voltage at the sending end is now E_b' and that at the receiving end E_a and it will be evident that energy can only be supplied in this direction at a leading power factor. The disadvantages of a leading transmission power factor have already been discussed in the preceding paragraph.

Variable Interconnector Voltages.—Referring again to Fig. 185, it will be evident that if E_a, the voltage applied to the sending end of the interconnector, could be varied as the current OI varies, the power factor at the receiving end, $\cos \phi_b$, could be maintained at a constant value independently of the load. Thus the interconnector power factor is controlled by voltage, just as in the case of a generator where the power factor is controlled by the exciter. The sides of the interconnector impedance triangle are all linear functions of current and thus as the load decreases, this triangle will diminish in size and by decreasing the length of E_a, the locus of the latter will move along IZ towards E_b so that the vector IR is fixed in direction. A similar reasoning applies if E_b is varied or if both E_a and E_b are varied appropriately. It will generally be inadmissible to vary the actual busbar voltages and consequently a voltage boost must be introduced into the interconnector, thereby allowing the busbar voltage at both stations to be maintained constant.

Voltage and Size of the Required Booster.—It becomes necessary to calculate the voltage and rating of the booster for the maximum load which the interconnector has to carry; with a given current, both the voltage and the rating will depend upon the interconnector impedance and upon the power factor of transmission.

Let I be the maximum current to be transmitted and R and X the total resistance and reactance of the EHV line and transformers in ohms per conductor, assuming the resistance and reactance of the transformers to be concentrated in their EHV windings. Then $Z = \sqrt{R^2 + X^2}$ = the total equivalent impedance of the interconnector.

A reference to the vector diagram of Fig. 186 will shew that $E_a = [(E_b \cos \phi_b + IR)^2 + E_b \sin \phi_b \pm IX)^2]^{\frac{1}{2}}$ the positive sign between the two quantities in the second term predicating a lagging current and the negative sign a leading current.

Also $$\phi_a = \text{arc}\tan\frac{E_b \sin\phi_b \mp IX}{E_b \cos\phi_b + IR}.$$

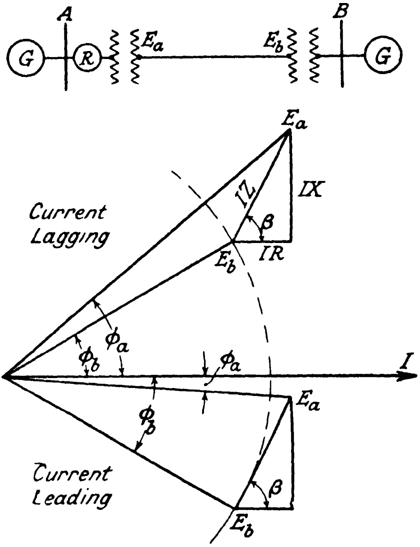

FIG. 186.

The voltage to be added by the booster per phase, referred to the EHV side of the transformer, is evidently $E_a - E_b$ and the kVA capacity is $\frac{3I}{1{,}000}(E_a - E_b)$ or in terms of the line voltages $\sqrt{3}I.\delta V$.

Example of Calculation of Booster Voltage and kVA.—Two three-phase power stations, A and B, are interconnected by means of a cable 16 miles in length having a resistance of 0·247 ohm per conductor per mile, and an inductance of 0·45 millihenry per conductor per mile. The generating pressures are 6,600 volts at 50 frequency and the transmission pressure 33 kV. The transformers at each end of the interconnector are rated at 10 MVA and the copper loss of each at full-load is 110 kW, each transformer having a reactance at full-load of 2 per cent.

It is desired to transmit 7,500 kW at a power factor of 0·7 (lagging) at the receiving end. Calculate the loss on the interconnector as a percentage of the power received and the required voltage and kVA capacity of the booster.

Resistance of cable (per conductor) $= 16 \times 0{\cdot}247 = 3{\cdot}952\ \Omega$.

Transformer current at full-load $= \dfrac{10{,}000}{\sqrt{3} \times 33} = 175$ amperes.

Equivalent resistance per phase of transformer

$$= \frac{110 \times 1{,}000}{3 \times 175^2} = 1{\cdot}198\ \Omega.$$

Total resistance per conductor (in terms of the EHV)

$$= 3{\cdot}952 + (2 \times 1{\cdot}198) = 6{\cdot}348\ \Omega.$$

Reactance of cable (per conductor)

$$= \frac{2\pi 50 \times 16 \times 0{\cdot}45}{1{,}000} = 2{\cdot}26\ \Omega.$$

Reactance of transformer per phase

$$\text{Per cent reactance} = 2 = 100\ \text{IX}\frac{\sqrt{3}}{\text{V}}$$

where $\text{I} = \text{kVA per phase} \times 1{,}000 \times \dfrac{\sqrt{3}}{\text{V}}$

$$\therefore\ \text{X (ohms)} = \frac{2\text{V}^2}{100 \times \sqrt{3} \times \text{kVA per phase} \times 1{,}000 \times \sqrt{3}}$$

$$= \frac{2\text{V}^2}{3 \times 10^5 \times \text{kVA per phase}}$$

$$= \frac{2\text{V}^2}{10^5 \times \text{transformer kVA}}$$

$$= \frac{2 \times 33{,}000^2}{10{,}000 \times 10^5} = \frac{2 \times 33^2}{1{,}000} = 2{\cdot}18\ \Omega.$$

Total reactance per conductor (in terms of the EHV)

$$= 2{\cdot}26 + (2 \times 2{\cdot}18) = 6{\cdot}62\ \Omega.$$

Line current $= \dfrac{7{,}500}{\sqrt{3} \times 33 \times 0{\cdot}7} = 187$ amperes.

Whence IR $= 187 \times 6{\cdot}348 = 1{,}190$ volts

IX $= 187 \times 6{\cdot}62 = 1{,}240$ volts.

Voltage to neutral at station B $= \dfrac{33{,}000}{\sqrt{3}} = 19{,}052.$

Phase voltage at station A

$$= [(19{,}052 \times 0{\cdot}7 + 1{,}190)^2 + (19{,}052 \times 0{\cdot}714 + 1{,}240)^2]^{\frac{1}{2}}$$
$$= [14{,}526^2 + 14{,}840^2]^{\frac{1}{2}}$$
$$= 20{,}770.$$

Booster volts between lines $= \sqrt{3}\ (20{,}770 - 19{,}052)$

$= \sqrt{3} \times 1{,}718$

$= 2{,}975$ volts (in terms of the EHV)

Booster capacity in kVA $= \dfrac{3I(E_a - E_b)}{1{,}000}$

$$= \frac{3 \times 187 \times 1{,}718}{1{,}000} = 964.$$

Power factor at the sending end $= \cos \phi_a$.

$$\phi_a = \text{arc tan } \frac{(19{,}052 \times 0{\cdot}714) + 1{,}240}{(19{,}052 \times 0{\cdot}7) + 1{,}190}$$
$$= \text{arc tan } \frac{14{,}840}{14{,}526}$$
$$= \text{arc tan } 1{\cdot}022 = 45^\circ 37'$$
$$\cos \phi_a = 0{\cdot}6995$$

kVA at the sending end $= 3 \times 187 \times 20{,}770 \times 10^{-3} = 11{,}650$

kW at the sending end $= 11{,}650 \times 0{\cdot}6995 = 8{,}151$

kW at the receiving end $= 7{,}500$

$\therefore$ Loss $= 651$ kW

$$\text{Per cent loss} = \frac{651}{7{,}500} \times 100$$
$$= 8{\cdot}66 \text{ per cent.}$$

Two Interconnectors in Parallel.—Special consideration must be given to the case of two stations paralleled by means of two or more interconnectors, since paralleled interconnectors will generally have different impedance voltages at full-load and different ratios of reactance to resistance. In the case of different impedances, the interconnectors will share the total load in inverse proportion to their impedance values in ohms. Let the impedances of the two interconnectors operating in parallel be Z_1 and Z_2. Let the load currents be I_1 and I_2 and the total load current I. Since the interconnectors are paralleled at both ends, their impedance voltages must be equal. This will be obvious from a glance at Fig. 185.

$$\therefore \; I_1Z_1 = I_2Z_2 = IZ$$

where Z is the resultant of Z_1 and Z_2

$$\therefore Z = \frac{Z_1Z_2}{Z_1 + Z_2}$$

$$\text{thus } I_1 = I\frac{Z}{Z_1} = I\frac{Z_2}{Z_1 + Z_2} \; *$$

$$\text{and } I_2 = I\frac{Z}{Z_2} = I\frac{Z_1}{Z_1 + Z_2}$$

$$\text{Let } Z_1 = 2Z_2 \text{ then since } I_1Z_1 = I_2Z_2$$

$$I_1 = \tfrac{1}{2}I_2.$$

Thus if two cables, each having the same cross-sectional area, but one being twice the length of the other were paralleled, the longer feeder could only carry one-half of its rated current, without the shorter feeder being overloaded. If, however, the two cables have the same length but have cross-sections in the ratio 2 : 1, then they will share the current between them in proportion to their cross-sections and they will thus operate satisfactorily in parallel if they both have the same ratios of reactance to resistance. If the ratios of reactance to resistance are different, then there will be a phase angle between the interconnector currents. For example, suppose a cable is directly connected between the busbars of two stations, the busbar voltages being 6,600, and owing to extensions, a further interconnector is installed. This consists of a 33-kV cable of the same cross-sectional area as the original cable but step-up transformers must, of course, be utilized. Due to the latter, the ratio of reactance to resistance of the new interconnector is greater than that of the original. The vector diagram relating to this case is shewn in Fig. 187. OA and OB represent the voltages at the sending and receiving ends respectively and are displaced by the load angle α. AC represents the voltage injected into both interconnectors, BCD is the impedance triangle of the 6·6-kV cable and BCE

---

* Of course Z_1Z_2 is the vector product of Z_1 and Z_2 and $Z_1 + Z_2$ is their vector sum.

of the 33-kV cable. Since the feeder currents must lie parallel to the resistance voltages BD and BE, these are represented by I_1 and I_2 respectively, and it will be seen that there is a phase difference of $\beta_2 - \beta_1$ between the feeder currents where

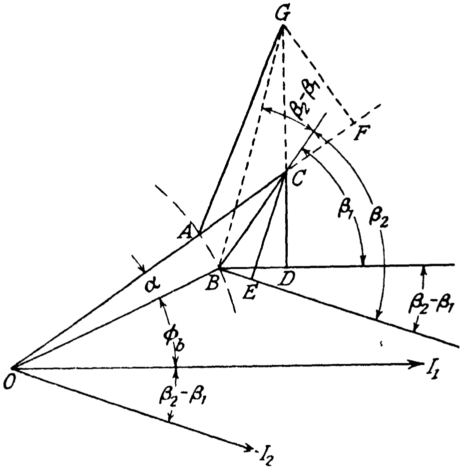

FIG. 187.

β_1 and β_2 are the natural impedance angles of the two interconnectors. Since (neglecting the resistance of the transformers in the case of the 33-kV interconnector) the effective resistances of both interconnectors are equal, their currents will be proportional respectively to BD and BE. The impedance voltage vector BC is, of course, common to both interconnectors, and since the angles β_1 and β_2 are fixed, it follows that BE must be shorter than BD. It will thus be evident that it is impossible fully to load the higher voltage cable. If a separate booster is installed in series with the 33-kV cable, the boost voltage could be increased until this cable was fully loaded, but this would increase still further the phase angle between the two currents, thereby necessitating an increase in the total cross-section as compared with that necessary were the two currents in phase with each other. To achieve this desideratum, the boost voltage injected into the 33-kV interconnector must lead the boost voltage AC, now supposed to be injected into the 6·6-kV cable only, by the angle $\beta_2 - \beta_1$. This could be achieved by means of two boosters in the 33-kV interconnector, one giving a boost voltage AF in phase with the busbar voltage, and the other a boost voltage FG in quadrature therewith. Separate control of these two voltages gives the most flexible operation, but the arrangement would be both expensive and complex. A more acceptable solution would be to add artificial reactance to the 6·6-kV cable until the angle β_1 approaches β_2, provided the series booster could compensate for the extra voltage drop.

Control of Current in a Ring Main.—In the case of three or more stations feeding into a number of interconnectors forming a closed loop, it becomes essential to have control of the phase of the boost voltage in order that the currents may be controlled. Referring to Fig. 188(*a*), let A, B and C represent three power stations interconnected with each other as shewn, but imagine for the moment that the loop is broken at D, so that the three feeders AB, BC and CL are simply in series. Fig. 188(*b*) shews the vector diagram relating to this condition ; OA, OB, OC and OL represent the busbar voltages and the voltage at the load L, all assumed to be equal. Considering first the feeder CL ; in order to transmit a current I_3 lagging behind OL by the angle $\widehat{LOI_3}$, the voltage OC must lead OL by the angle α_3 and the booster at the sending end of CL must inject a voltage CM into the feeder in phase with OC. The impedance voltage of this feeder is ML. To maintain similar conditions in the feeders BC and AB, the load angles α_2 and α_1 and the boost voltages BN and AP are required. Thus the potential difference across the isolator at D is

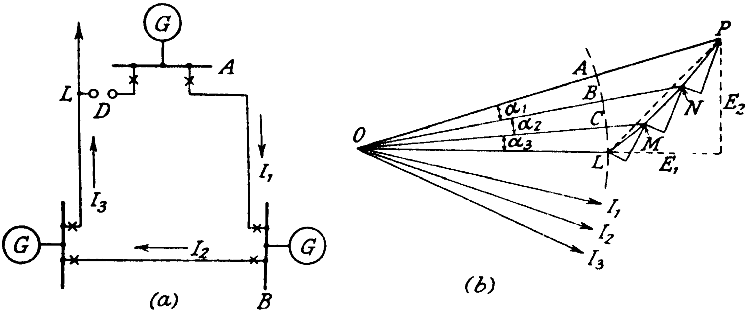

FIG. 188.

$LP = I_3Z_3 + I_2Z_2 + I_1Z_1$,* and if this isolator were closed, a corresponding current would circulate around the ring lagging behind LP by an angle δ where $\arc\tan\delta = \dfrac{\text{reactance of the ring.}}{\text{resistance of the ring}}$ This circulating current

$$I_c = \frac{LP}{Z_1 + Z_2 + Z_3}$$

while the feeder currents are

$$\begin{gathered} I_1 + I_c \\ I_2 + I_c \\ I_3 + I_c \end{gathered}$$

and it will be evident that the current flow cannot be controlled. If, however, in-phase and quadrature boosting plant is available at L, giving voltages E_1 in phase with OL and E_2 in quadrature with OL, then since $OL + E_1 + E_2 = OP$, the isolator at D can be closed without modifying the current conditions and complete control is thereby regained. In most practical cases the reactance predominates and thus the quadrature boost E_2 is then of more importance than the in-phase boost E_1. The in-phase boost is, however, that which is the more readily provided now that most large transformers in feeders are provided with boosting turns and tappings.

In-phase boosters are thus evidently required in each section of the network forming a closed loop, and in addition in-phase and quadrature voltage boosts must be injected into the ring at one point. In general, if complete control of the currents in a closed ring interconnecting N power stations is essential, then if the power station voltages are to be maintained constant, $N + 1$ in-phase boosters and one quadrature booster are required. If E_1 and E_2 (Fig. 188(*b*)) can both be varied independently, any desired modification of current distribution round the ring can be obtained.

Imagine, for example, that power station C in Fig. 188 is to receive 30 MW at 0·8 power factor lagging. Station A is to supply 25 MW as follows: 15 MW through B and thence to C and 10 MW direct to C, while station B is to supply the remaining 5 MW at 0·9 power factor lagging measured at station C. These conditions are shewn in Fig. 189. Referring now to the corresponding vector diagram given in Fig. 190,

---

* Voltages, currents and impedances are, of course, vector quantities.

in which OA, OB and OC represent the busbar voltages at stations A, B and C respectively. *Cb* represents the impedance voltage of interconnector BC, and I_2 the corresponding current lagging behind OC by arc cos 0·8. *Cd* likewise is the impedance voltage of the interconnector AC and I_3 is the current, lagging behind OC, of course, also by arc cos 0·8. I is the current corresponding to the 5 MW supplied from station B lagging behind OC by arc cos 0·9, and thus the current in inter-

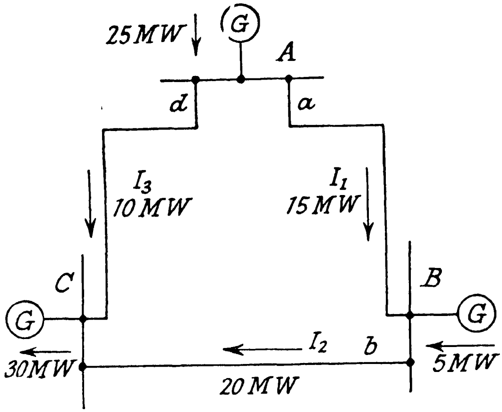

Fig. 189.

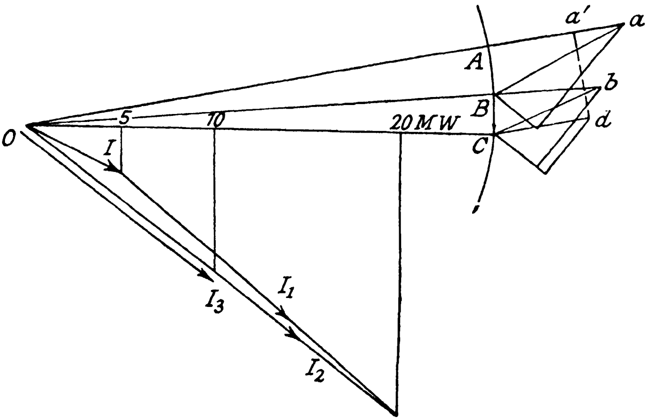

Fig. 190.

connector AB is I_1 and this must lag behind OC by the angle arc cos 0·77. The total current from station A is thus $I_1 + I_3$ and the power factor of this current, with reference to OC, is evidently lower than 0·8 since the power factor of station B's contribution is 0·9. B*a* is the impedance voltage of interconnector AB corresponding to the current I_1. Thus in-phase boosts are necessary at *a* and *b* of magnitudes A*a* and B*b* respectively, while at *d* both in-phase and quadrature boosts, of magnitude A*a′* and *a′d* respectively, are required to maintain this current distribution.

A case of considerable practical importance arises when an electric power system which operates a number of stations in parallel is connected to the National Electricity Scheme's system. Consider, for example, the system shewn in Fig. 191 having three power stations, A, B and C, each with generation and distribution at 11 kV, and (apart from other interconnexion in the distribution system) having two main interconnectors between stations A and B and between A and C. It will be possible to send power along the interconnectors by control of the turbine stop valves, while in-phase boosters *x* will provide complete power factor control.

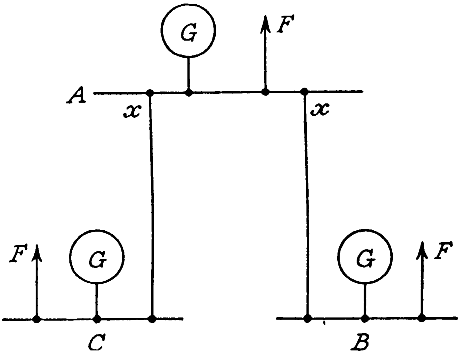

Fig. 191.

Suppose, now, that this self-contained system is interconnected with other power stations *via* the Central Electricity Board's 132-kV system. This connexion is shewn in Fig. 192, in which station D represents a further power station and *a*, *b*, *c* and *d* represent Grid substation busbars operating at 132 kV, and *t* the step-up Grid transformers. The Grid substation busbars are interconnected and the 132-kV feeders *f* are main connexions with the Grid. These interconnexions will result in the loss of control of the original system since the Central Electricity Board will now control the loading on all the stations, and thus the phase positions of the generators in these stations will also be controlled by the Board. The authority operating the original stations A, B and C will therefore be unable to control the interchange of energy amongst these stations *via* its own 11-kV connexions. If, however, quadrature boosters, in addition to in-phase boosters, are installed at *y*, complete control of the flow of power and reactive volt-amperes in the 11-kV lines is evidently regained. Thus the power exported to the Grid is controlled by angular rotor displacements amongst the three stations, while kilovars

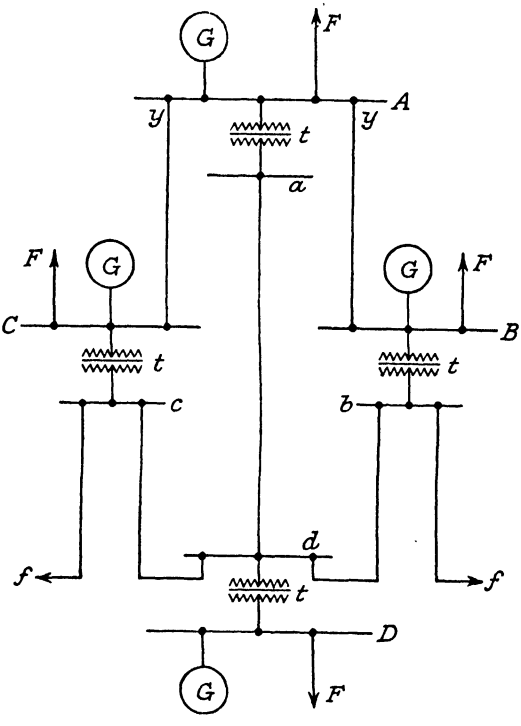

FIG. 192.

export to the Grid could be controlled either by generator excitation or by Grid in-phase boosters. The in-phase and quadrature boosters in the 11-kV system will, of course, require adjustment every time the export conditions (kW and kVAR) to the Grid are changed.

The boosters installed at *y* are thus for local control. Their function is to provide an independent means for sending power at a selected power factor along a particular interconnector without, at the same time, disturbing the angular rotor positions of several stations.

CHAPTER X

APPARATUS FOR INTERCONNECTOR CONTROL

Introduction.—It has been shewn in the previous chapter that voltage variation and adjustment are necessary in order to control the power factor at which power is transmitted along interconnectors and ring mains. Without some means of voltage control, the station busbar voltages can only be maintained at constant values if uncontrolled reactive currents are allowed to circulate in the interconnectors. It is therefore necessary to install additional apparatus for the appropriate variation of voltage since it is impracticable to vary the busbar voltage over a sufficiently large range. Various types of apparatus are available for this purpose and each type has advantages for a given set of conditions.

Types of Booster.—The voltage can be varied by means of tappings on the main transformer, by means of separate static boosting transformer equipments or by means of induction regulators. All three methods have been employed, but the first mentioned is now the most widely used in this country. This is due to the fact that the placing of the tappings in the main transformer involves the minimum amount of apparatus and is therefore the least expensive and most efficient method. It also requires the least floor space and enables the number of external connexions to be minimized and the cabling simplified. On-load tap changing gear has been developed which is thoroughly reliable and can readily be adapted for remote control.

Tappings in the Main Transformer.—The usual arrangement is shewn in Fig. 193 in which the tapped portion of the winding is GE, and A and B are transfer oil switches. C is a centre-tapped reactor, the middle point being connected to the non-tapped half of the main transformer winding CD, P and Q represent the selector switches which, in the position shewn in the diagram, give the maximum turns in circuit. In this position, the load current must divide equally between the two halves of the reactor, since under this condition no flux is set up in the reactor iron, and thus its impedance is a minimum. If, now, it is desired to reduce the boost voltage, the procedure is as follows: transfer oil switch B is opened so that momentarily the total current must pass through the other half of the reactor. The selector switch Q is then moved to the next contact and transfer oil switch B closed. The

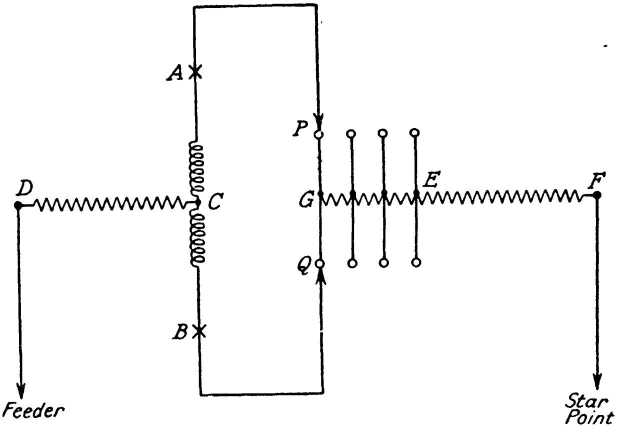

Fig. 193.

reactor now bridges the tapped section so that a circulating current now flows through this section and the reactor, and this current is superimposed upon the load current which will clearly flow in opposite directions in the two halves of the reactor. Transfer oil switch A now opens when again the load current flows through one-half of the reactor winding, the circulating current path being, of course, broken. Selector switch P is then moved to the next tapping and the transfer oil switch A is closed, when the operation is complete.

The complete sequence of one tap change is shewn in Fig. 194 and it will be seen therefrom that six switch movements are necessary for one tap change. Referring to Fig. 194(*c*), it will be evident that the centre point of the reactor is substantially at the same potential as a point midway between tappings 1 and 2. If, therefore, the reactor is appropriately rated, it may be left in service in the position (*c*) and thus the number of steps in the voltage range is nearly doubled by this expedient. For example, four boosting sections are shewn in the diagrams of Fig. 194 and these, if the reactor is utilized as above, will give the total voltage boost in seven steps.

Thus if N tappings are made in the transformer winding, the total number of steps is 2N − 1. This is clearly an advantage since the expedient allows a relatively fine voltage variation without at the same time rendering it necessary to provide a large number of tappings but, of course, the reactor losses reduce the transformer efficiency and in practice the method is not widely used.

Variation of Voltage during Tap Changing.—The variation of the voltage due to a tap change is non-uniform and this is due to the sequence in which the reactor is employed as shewn in Fig. 194. Referring to positions (*b*) and (*e*) of the diagrams, it will be evident that in both cases the transformer load current flowing through half the reactor winding will cause e.m.f's to be induced in the latter lagging 90 degrees behind the current. It would clearly be advantageous to keep

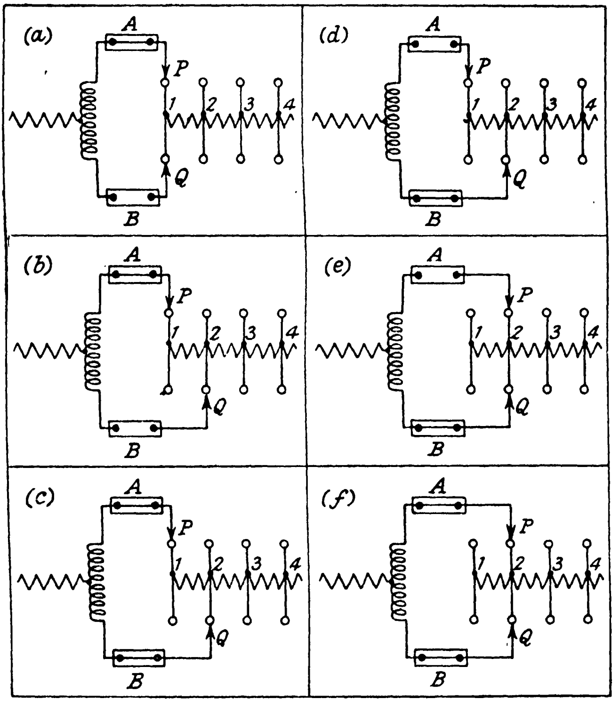

FIG. 194.

the inductance of the coil halves low, but on the other hand, when the reactor is connected across a transformer boosting section (Fig. 194(c)) it is advisable for the inductance of the reactor to be high in order to limit the circulating current taken by the coil. This is specially important, of course, if connexion (c) is utilized as an operating position. Thus the requirements are conflicting, a high inductance being required in position (c) and a low inductance in positions (a), (b), (d) and (e). A usual compromise is to design the reactor so that about 50 per cent of full-load current circulates through it when the full tapping voltage is applied across it as in (c). The voltage change corresponding to a tap change is shewn in Fig. 195 for the condition of 0·75 power factor lagging. Let OM represent the line voltage and NM the voltage between a pair of tappings (NM is, of course, greatly exaggerated for clarity). The point c is midway between M and N, and Oc evidently represents approximately the voltage corresponding to the position (c) in Fig. 194, the small resistance drop through the two halves of the reactor in parallel being neglected. In positions (a) and (b) of this figure, the load current is being carried by the upper half of the reactor and thus an e.m.f. equal to Ma is induced therein, lagging substantially 90 degrees behind the current; consequently the line voltage is now represented by Oa. In positions (d) and (e) of Fig. 194, the lower half of the reactor only carries the load current and an e.m.f. equal to Nd = Ma is induced therein. The line voltage corresponding to this condition is evidently the resultant of ON and Nd or Od, while the line voltage corresponding to position (f) is ON, which is greater than Nd.

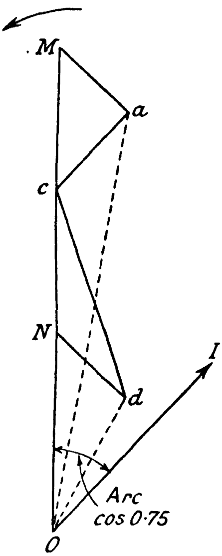

FIG. 195.

The voltage variation OM, Oa, Od, ON can be changed to the sequence OM, Oc, ON by providing an oil switch directly across the reactor. This switch is closed whenever either of the transfer oil switches are open, but it must be opened in advance of, and closed in arrears of, position (c) in Fig. 194 to avoid the short-circuiting of a boosting section. For example, consider Fig. 194(*b*) and imagine the reactor to be short-circuited, when it will be evident that the load current can now divide equally between the two reactor halves. When the voltage tapping steps are reasonably small, however, this additional switch is not provided owing to the extra complication of the switching sequence apparatus.

In the case of the larger equipments, the selector switches are of the contactor type and are operated, together with the transfer oil switches, by motor-driven cams which operate the gear in the proper sequence simultaneously on the three phases.

Current Limiting during Tap Change by Resistance.—It will be obvious that in the method of tap changing, a current-limiting device must be employed during the transition time (Fig. 194(*c*)). Instead of a centre-tapped reactor, a resistor can be used and this scheme is shewn in Fig. 196. The switching sequence for changing from tapping 1 to 2 is as follows: transfer circuit breaker B opens, Q moves from 1 to 2, B closes, A opens, P moves from 1 to 2, A closes. When B opens, the line voltage is equal to the voltage of the higher tapping less the voltage drop in the resistor. When B closes again, the line voltage is that relating to tapping 2. It will be obvious, therefore, that the present scheme is superior to the reactor method from the viewpoint of the voltage change during a tapping change. Other advantages are, since the circuit which has to be broken is non-inductive, the sparking at the switch contacts and therefore the maintenance are reduced, and there are no losses in the working position. On the other hand, the reactor method requires fewer tappings on the transformer if the transition position is utilized.

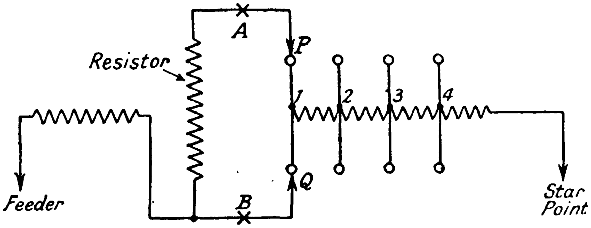

FIG. 196.

The resistor cannot, for economic reasons, be continuously rated. Take for instance the case of a 10-MVA transformer provided with $1\frac{1}{2}$ per cent tappings. Let r be the percentage voltage drop when full-load current flows. Let R be the resistance of the resistor in ohms and V the line voltage,

then
$$r = \mathrm{IR} \times \frac{\sqrt{3}}{\mathrm{V}} \times 100$$
$$= \frac{\mathrm{I}^2\mathrm{R} \times \sqrt{3}}{\mathrm{VI}} \times 100$$
$$\therefore \mathrm{I}^2\mathrm{R} = \frac{\mathrm{VI}r}{\sqrt{3} \times 100} = \frac{10{,}000}{\sqrt{3} \times 100} \times 1\cdot5 = 87 \text{ kW}.$$

It is thus seen that the resistor would have to dissipate 87 kW, which would be quite impracticable.

A normal tap change occupies about one second only, but if the operation were not completed, say due to an auxiliary power failure, the resistor would be left in circuit. For this reason, stored energy is employed as the motive power for the purpose of making a tap change. One method is to couple a servo-motor to a flywheel. When the motor speed has reached a certain value, a centrifugally operated device couples the flywheel to the tap changer shaft and the motor is disconnected. The energy stored in the flywheel is amply sufficient to turn the tap changer shaft by an amount corresponding to one tap change before the flywheel is uncoupled. With this scheme, the risk of an incomplete tap change is very remote. The bridging switch referred to above is almost always used with resistance stepping since the saving in resistor rating is considerable.

Fast-operating Gear utilizing Resistors.—The gear shewn in Fig. 197 is known as the "Jansen" type, which has been largely used on the Continent. The total resistance

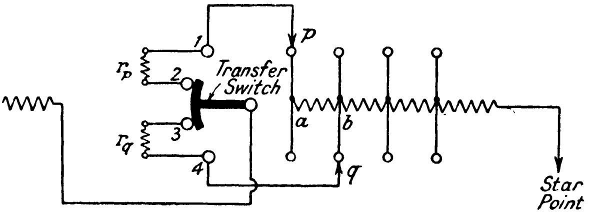

FIG. 197.

employed during the transition period is divided into two halves, the ends of each half terminating in contacts ; the two operating positions being 1 and 2, and 3 and 4 respectively. The diagram shews the transfer switch in the transition position. The operation is as follows : imagine all the boosting sections of the transformer to be in service, i.e., selector switches *p* and *q* are both connected to *a* and the transfer switch short-circuits contacts 1 and 2. The transfer switch first moves into the position shewn in the diagram when r_p and r_q each carries half the load current, then selector *q* moves to *b*. The transfer switch now moves to its final position on contacts 3 and 4, after which selector switch *p* moves to *b* in readiness for the next tap change.

With respect to the total load current, the resistors r_p and r_q are in parallel, while with respect to the circulating current they are in series. This is a decided advantage since the resistance may be reduced to a low ohmic value without giving rise to a large circulating current. Also the transfer switch moves at a high speed, " wiping " rapidly over the contacts so that the resistors are under load only for about 0·05 second and can thus be made very small for this reason. Due to the short time occupied by the tap change, the corresponding voltage fluctuations are of no practical importance. This gear has been successfully employed on three-phase transformers up to 100 MVA and 100 kV. The rapid switch action is produced by means of stored energy afforded by a spring which is wound up ready for service by a servo-motor. After the tap change has been completed, the servo-motor re-winds the spring in readiness for the next operation.

Location of Tappings in Transformer Winding.—From the viewpoint of potentials the most convenient location of the tapped section of the transformer winding is at the star point in the case of star-connected windings, and at the middle point of the winding in the case of delta-connected transformers, since at these points the power frequency voltage to earth is least. There are two important advantages to be gained by locating the tappings in the middle of the winding. Referring to Fig. 198, the low- and high-pressure windings of the transformer LT and HT are shewn in section and the HT winding is tapped at the end. As the boosting turns are cut out of service, it will be evident that the length of the leakage flux path becomes progressively shorter ; conse-

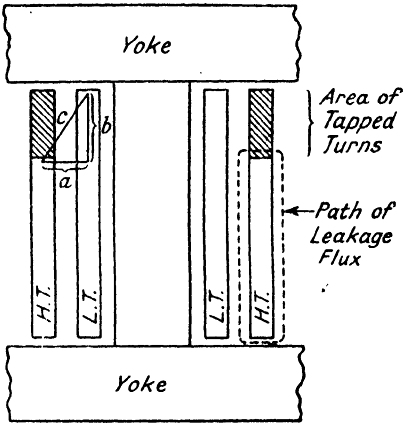

FIG. 198.

quently the leakage flux and reactance both increase, so that the latter varies every time a tap change is made. Again, when all the tappings are cut out, the short-circuit stresses are increased due to the electromagnetic balance of the primary and secondary windings being disturbed. Referring again to the diagram and remembering that the stresses are proportional to the product of the ampere-turns of the primary and secondary windings, let the stress be represented by *c*. This stress can be resolved into two components, *a*, the radial component which is not of major importance since it can generally be successfully resisted by the strength of the copper, and *b*, the axial component. The latter tends to move both windings unless their magnetic centres coincide when, of course, this component vanishes. Thus lack of mag-

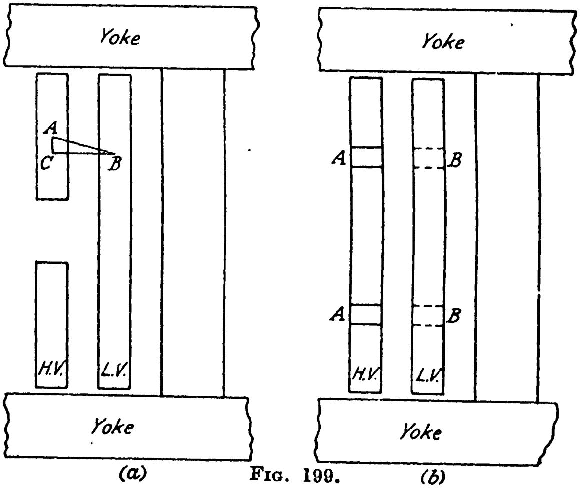

(a) FIG. 199. (b)

netic symmetry may result in both the deformation of the windings and damage to the insulation.

If the tapping range is large, of the order of (say) 20 per cent, the magnetic symmetry of the windings is disturbed when the boosting turns are cut out even if the tappings are located in the middle of the winding. Referring to Fig. 199(*a*), let A be the centre of half the high voltage winding and B the centre of half the low voltage winding, then AB represents the total stress and AC the axial component thereof. In such a case, the whole winding should be divided into halves with a tapping section in each half as shewn in Fig. 199(*b*), in which A represents the two tapped sections of the high voltage winding. A further reduction in the windings asymmetry is secured by facing the tapped sections with blank spaces, B, in the low-voltage winding.

Tappings on Primary *versus* Tappings on Secondary.—When the tappings are inserted in the primary winding and the primary applied voltage is maintained constant, the voltage per turn both of the primary and the secondary increase with the boost, since for maximum boost the primary turns are a minimum.

$$\text{The voltage per turn} = \frac{V}{T} = 4{\cdot}44\, faB\, 10^{-8}$$

where f = frequency
a = core section
B = flux density.

Since f and a will be constant,

$$\frac{V}{T} = kB.$$

Since $\frac{V}{T}$ is proportional to B, then at minimum boost, which corresponds to maximum primary turns, B will have a minimum value, and if a large voltage variation is required, then B will have an unduly low value and the core cross-section will be unduly large for this condition, resulting in a low utilization of material. From the viewpoint of maintaining constant flux density in the core, the tappings should be located in the windings in which the voltage varies. If the primary voltage is constant and it is desired to boost the secondary voltage, the tappings should be in the secondary. This condition is usually associated with step-up transformers in power stations.

On the other hand, if the tappings are required to compensate for a varying primary voltage, i.e., the secondary voltage is to be maintained at a constant value, then the tappings should be inserted in the primary. This condition is usually associated with transformers located at the receiving ends of feeders.

For convenience in manufacture and for flexibility, the tappings should usually be in the high voltage winding, whether this is the primary or the secondary. On low voltage windings the current may be very large and the provision of several tappings close together is objectionable mechanically; also one turn may represent an appreciable portion of the total voltage and for these reasons tappings in the low voltage winding are often impracticable. Low voltage windings are usually located next to the core for reasons of insulation safety and tappings have to be brought out through the oil duct between the two windings and then across the face of the high voltage winding, and this feature is obviously very undesirable. While tappings on very high voltage windings are not desirable for reasons of insulation, the difficulties can usually be overcome without excessive cost.

Arrangement of the Booster System to Match the Switchgear.—The switchgear associated with the tap-changing gear is obviously of the greatest importance. Its design must be such that it is capable of almost continuous operation under full-load condition. Such onerous service will evidently suggest the advisability of allowing the switch-gear to work at the current and voltage to which it is most suited. In the arrangements previously referred to, the gear is constrained to work under the conditions associated with the main

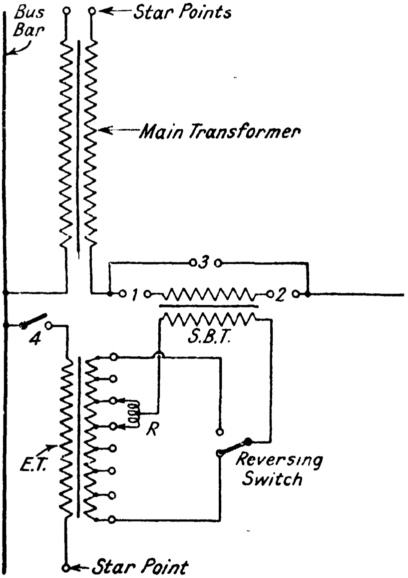

FIG. 200.

transformer. If, however, the scheme of Fig. 200 is adopted, control of the switchgear voltage and current is secured. Referring to the diagram, ET represents the exciting transformer, the primary winding of which is connected to the supply and the secondary, tapped as shewn, feeds the primary of the series boosting transformer SBT. The operating voltage and current are fixed by the turns ratios of the exciting and series boosting transformers respectively. The tap changes are made by the aid of the centre tapped reactor R, and the operation is similar to that employed for the schemes of Fig. 193 or Fig. 196, if a resistor is employed instead of the reactor. If a reversing switch is provided, as shewn in the diagram, the voltage applied to the primary of the series boosting transformer can be reversed, thus providing both positive and negative boosts at will. For example, with eight boosting sections on the exciting transformer, 15 positive and 15 negative boost voltages are available if the reactor is continuously rated, thus allowing the transition position to be utilized as a boosting position. During the operation of the reversing switch, the primary winding of the series boosting transformer must be short-circuited, otherwise the load current in the secondary, being unopposed, is free to magnetize the core, and the resulting voltage induced in the primary may be high enough to damage the insulation.

It will be evident that in this scheme the main transformer is in its simplest form, having no tappings and therefore a minimum number of connexions brought out of the tank, but the scheme clearly requires more apparatus than that of Fig. 193, and for this reason its sphere of application is restricted to the case when it is desired to regulate the voltage at a point where no main transformer exists or, alternatively, where a main transformer without tappings is installed. A further advantage of this arrangement is that complete isolation of the boosting gear can readily be provided. Referring again to Fig. 200, the boost voltage is reduced to zero and switch 3 closed. Switches 1, 2 and 4 are now opened and the whole of the boosting apparatus is isolated, thus allowing for the modification of the boost voltage steps or the amount of regulation available to be changed without interfering with the main transformer.

Electrical Tap Position Indicator.—When the tap-changing gear is electrically operated from a distant point, it is convenient to have an indicator at the control position which shews the position of the tap-changing switch. A scheme for this purpose (Metropolitan-Vickers Electrical Co.) is shewn in Fig. 201, which will be recognized as an adaptation

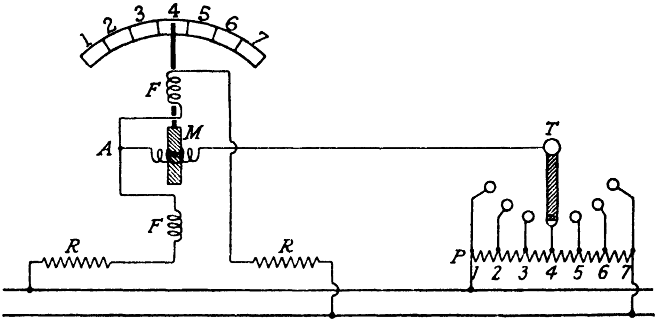

FIG. 201.

of the Wheatstone Bridge. On the indicating instrument, two resistors RR of equal ohmic value are connected in series with the field coils FF, this circuit being connected across the auxiliary supply. A potentiometer P is connected across the same supply, and this is tapped at equal intervals along its length as shewn, the number of tappings thereon corresponding to the number of tappings on the transformer. The transmitting switch T and the potentiometer are both mounted in the housing of the tap-changing gear adjacent to the transformer and the transmitting switch is mechanically coupled to, and therefore moves with, the tap-changing switch. The movement of the indicating instrument consists of a coil M and an iron core attached to a pointer. One end of the moving coil is connected to the middle point A of the field circuit and the other end to the transmitting switch. The current is fed through the coil by means of two ligaments since there are no control springs. When the transmitting switch is in the position shewn in the diagram, it will be evident that the points T and A will be equipotential and thus there will be no current in M. Under these conditions the coils FF will provide a directive field which will keep the moving iron, and therefore the pointer, vertical, indicating that tapping 4 is in service. Suppose, now, the tap-changing gear is operated, then the transmitting switch will move with the tap-changing gear to, say, contact 3 on the potentiometer, when the points A and T will no longer be equipotential. A current will therefore flow through M and the ampere-turns of this coil will provide a field which, in conjunction with that due to FF, will deflect the pointer to 3 on the scale. If, on the other hand, the transmitting switch moves to position 5 on the potentiometer, it will be evident that the current through M will be reversed and the pointer will move to 5 on the scale. For other positions of the transmitting switch, such as 2 or 6, the ampere-turns of M will be further increased, thus moving the pointer to the appropriate position. The ampere-turns of both coils, FF and M, are equally affected by any change in the auxiliary supply voltage, and thus the indications of the instrument will be unaffected by voltage fluctuations.

Induction Regulators.—The induction regulator possesses some important advantages as compared with the boosting transformer such as smoothness and fineness of voltage variation. Also, no switching either of high voltage or high current circuits is necessary, and this fact will evidently reduce the maintenance costs. On the other hand, tappings located in the main transformer provide a means of varying the voltage which is both simpler and more efficient than can be secured with induction regulators. There are three types of induction regulator available, namely, the single-phase regulator, the double three-phase regulator and the single three-phase regulator. The first two types possess the advantage that the boost voltage is always in phase with the circuit voltage, while it is a characteristic of the single polyphase regulator that it introduces a phase shift into the circuit voltage.

In construction, the induction regulator resembles the induction motor, but the primary windings are generally located on the rotor and connected across the circuit voltage which it is desired to vary. The secondary windings are placed in the stator slots and these windings connected in series with the circuit. The rotor can be rotated through an angle of about 180 degrees at will through slow-motion gearing, the operation being usually achieved by means of a servo-motor.

The Single-phase Induction Regulator.—The single-phase regulator is essentially a variable ratio transformer and the working principle will be understood by the aid of

Fig. 202. For clarity, the secondary winding S is shewn as a ring, instead of a drum, winding and the primary winding P has been shewn in section. The arrangement is for two poles, but multipolar regulators may, of course, be employed. When the rotor is in the position shewn, the ampere-turns of the primary set up a flux in a vertical axis and this flux links with the secondary winding and induces a voltage therein which adds to the circuit voltage. In this position the magnetic coupling is a maximum. Imagine, now, the rotor to be rotated through 90 degrees, so that the axis of the flux set up by the primary ampere-turns is horizontal. In this position the voltage induced in the portions of the secondary winding AA′ and BB′ are equal but in opposition, so that the resultant voltage across the ends is zero. As the rotor is rotated, therefore, from the starting position, the voltage induced in the secondary is gradually reduced from a maximum to zero. If, now, the rotor is moved through a further 90 degrees, viz., from 90 to 180 degrees, the voltage induced in the secondary will increase from zero to a negative maximum at 180 degrees so that the boost range is equal to twice the maximum voltage induced in the secondary. This is shewn in the vector diagram of Fig. 202.

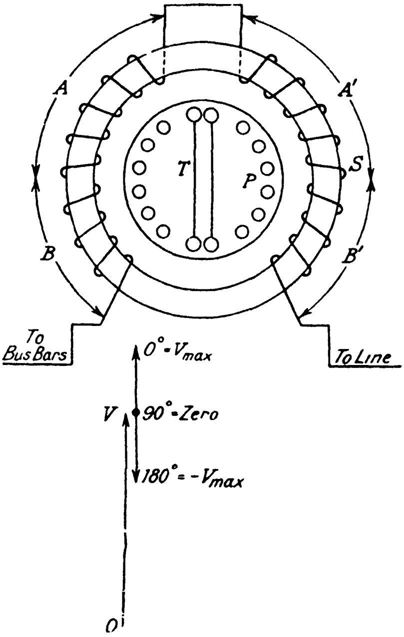

FIG. 202.

In addition to the primary, the rotor carries a tertiary winding T, which is in space quadrature with respect to the primary and consists of a few short-circuited turns of large cross-section. The object of the tertiary winding is to reduce the reactance of the secondary at or near the position of zero boost. Imagine the line to be loaded and the primary to be rotated through 90 degrees from the position of maximum boost so that the axis of the flux is horizontal. Under this condition, the primary winding will be carrying only the no-load current, since there is no output from the secondary. The load current traversing the latter winding, however, will produce a flux whose axis is vertical, and since this flux links with the secondary winding it will generate a reactive voltage therein. However, this flux will also link with the tertiary winding and this, being short-circuited, generates a flux which opposes that due to the ampere-turns of the secondary, thereby rendering the latter sensibly non-inductive. The action of the secondary and tertiary windings are, therefore, precisely similar to that of the windings of a transformer with the secondary short-circuited. At maximum positive or negative boost positions, the tertiary winding is inactive since it is not inductively related to the secondary and therefore carries no current. The same applies if the load current is zero, whatever the position of the rotor may be. If, however, the secondary winding carries a load current and the rotor occupies any position other than those corresponding to maximum or zero boosts, then both the primary and tertiary windings are inductively related to the secondary to a greater or less extent respectively. Under this condition, the secondary ampere-turns are neutralized partly by the primary and partly by the tertiary ampere-turns. Thus the reactance of the secondary winding is rendered sensibly constant independently of the rotor position.

Arrangement of Single-phase Induction Regulators in a Three-phase Circuit.—The rotors of three single-phase induction regulators are coupled together and operated as one unit when working on a three-phase feeder. The primary windings are connected in star and the secondaries in series with the lines as shewn in Fig. 203. Referring to the vector diagram, let the triangle ABC represent the unboosted line voltages, then OA, OB and OC represent the voltages applied to the primary windings. The positive boost voltages induced in the secondary windings are AA″, BB″ and CC″, and the corresponding negative boost voltages are AA′, BB′ and CC′. It will be noticed that the boosted line voltage triangles A″B″C″ and A′B′C′ always lie parallel to the unboosted triangle ABC. Thus it will be evident that this scheme does not introduce any phase angle into the feeder if the primaries

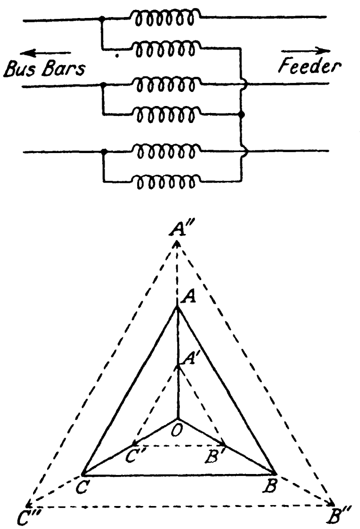

FIG. 203.

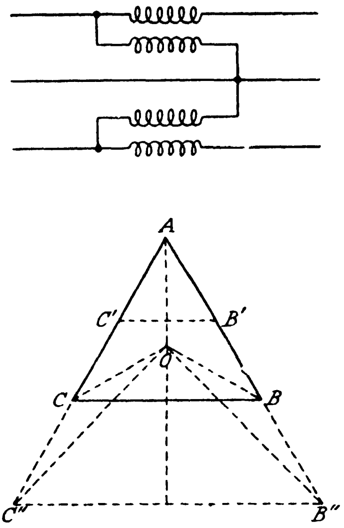

FIG. 205.

are excited from the phase voltages. If, however, the primaries were connected in delta, a considerable phase shift would

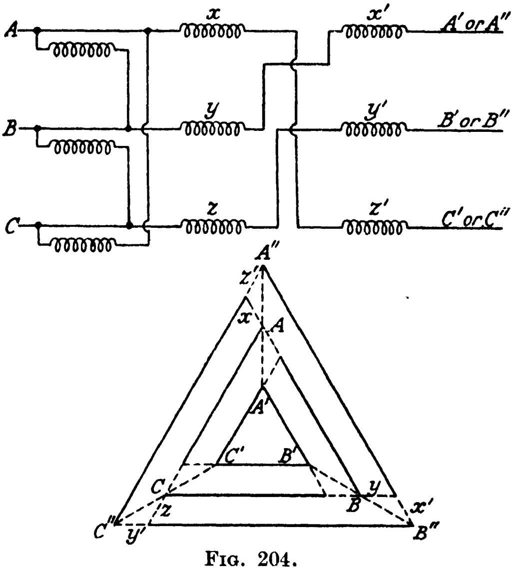

FIG. 204.

occur, this shift being a maximum at maximum boost, both positive and negative. If the primaries must be connected in delta and phase shift in the boosted triangle of line voltages is not permissible, the secondaries must each be divided into two halves and connected zigzag. The connexions and appropriate vector diagram are shewn in Fig. 204.

The line voltages of a three-phase system may be boosted by two single-phase induction regulators (or two single-phase boosting transformers) by connecting them in open delta, as shewn in Fig. 205, at the expense of some unbalance in respect to the neutral. Referring to the vectors, BB″ and CC″ represent the positive boost voltages induced in the secondary windings so that the corresponding line voltage triangle is AB″C″. The negative boost voltages are BB′ and CC′ and the corresponding line voltage triangle AB′C′. A disadvantage of this scheme is that if the neutral point O be earthed, the line potentials OB″ and OC″ rise with the boost and in the case of long high-voltage transmission systems, the capacitive currents drawn from the supply are seriously unbalanced and the dielectric losses (which are proportional to the square of the potential) largely increase. These considerations will especially refer to cable feeders.

The Single-type Polyphase Induction Regulator.—The polyphase regulator resembles a three-phase slip-ring induction motor. The three rotor windings are connected in star, the ends of these windings being fed from the three-phase supply. The stator windings are connected in series with the lines, the connexions being as shewn in Fig. 203. When the voltages are applied to the rotor, the ampere-turns thereof give rise to a rotating magnetic field. This field rotates at constant angular velocity as long as the frequency is constant, and is of constant magnitude. Thus a *constant value* of voltage is induced in each of the secondary windings, and evidently the magnitude of these voltages cannot be changed by rotating the rotor, but such action will change the *phase* of the secondary voltages. In Fig. 206, let OA be the phase value of the supply voltage and let the rotor be adjusted so that the axes of the primary and secondary windings coincide. Then the secondary induced voltage AB_1 will be in phase with the primary voltage and the boosted voltage will be OB_1. If the rotating magnetic field is in a counter-clockwise direction and the rotor is moved through 45 degrees in a clockwise direction, then the phase of the secondary induced voltage will be advanced by 45 degrees and will be represented by AB_2. The corresponding value of the boosted voltage will be OB_2. Similarly, AB_3, AB_4 and AB_5, and OB_3, OB_4 and OB_5 refer to the secondary induced voltages and boosted voltages respectively for a movement of the rotor through 90, 135 and 180 degrees in the same direction as before. Thus the locus of the secondary voltage is a circle and a movement of the rotor through one pole-pitch changes the voltage from OB_1 to OB_5.

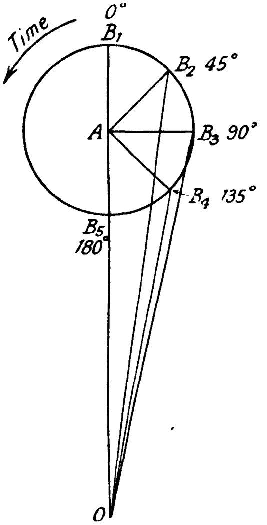

Fig. 206.

Since this represents the maximum movement necessary, the supply can be fed into the rotor by means of flexible leads, and brushgear and slip-rings dispensed with. It will be clear that except at maximum boost, both positive and negative, there is a phase displacement between the supply voltage and the boosted voltage. The vector diagram relating to the three phases is given in Fig. 207, ABC is the unboosted voltage triangle and A′B′C′ the boosted voltage triangle, while OA, OB and OC are the voltages applied to the primary windings.

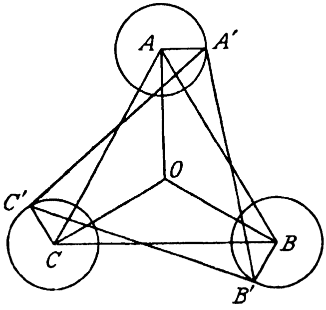

Fig. 207.

Double-type Polyphase Induction Regulator.—Imagine two power stations to be interconnected and a single-type three-phase induction regulator is inserted in the interconnector. Referring to the vector diagram of Fig. 208, which shews the transmission of a current OI from station A to station B at a power factor of cos ϕ. OE_a and OE_b represent the busbar voltages separated by the load angle α. The single-type polyphase regulator is adjusted so that the secondary induced voltage is E_aE_s, in phase with OE_a. Suppose now the regulator to be moved through the angle γ so

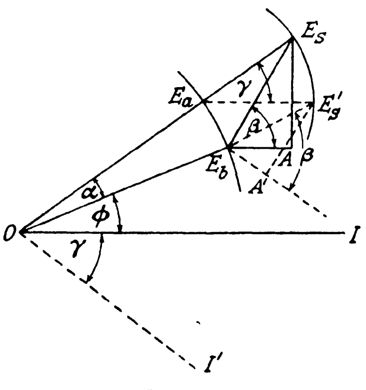

FIG. 208.

that the boost voltage is E_aE_s'. Since the natural interconnector angle $\beta = \text{arc tan}\,\frac{X}{R}$, where X and R are the reactance and resistance, this angle is constant, and therefore the impedance triangle E_bAE_s becomes $E_bA'E_s'$ and the current transmitted rotates clockwise through the angle γ. Thus every movement of the regulator is accompanied by a corresponding change in power factor and it will be evident that this method of control is not permissible. To overcome this difficulty, two single-type polyphase regulators, each of half the required total kVA capacity, are employed. The rotors are mechanically coupled so that the two regulators are operated as one unit. The scheme is shewn diagrammatically in Fig. 209, from which it will be seen that the secondaries of the two regulators A and B are connected in series. The primary windings of both regulators are connected in parallel, but in the case of regulator B, two primary leads are interchanged, so that the magnetic field produced

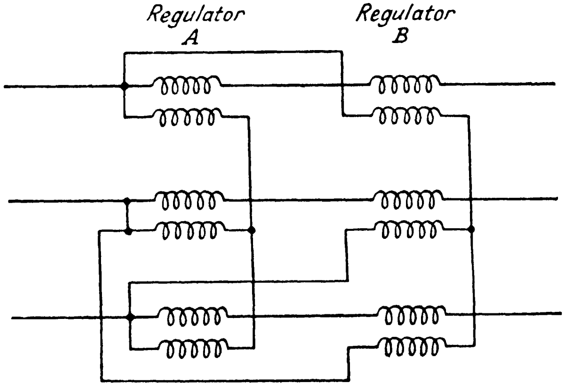

FIG. 209.

by the primary windings rotates in the opposite direction to that of regulator A. Thus when both rotors are turned in the *same* direction, if the phase of the secondary voltage of A is advanced by an angle γ, then the phase of the secondary voltage of B will be retarded by the same angle. Both sets of primary windings must, of course, be connected to constant voltage points, as shewn.

The voltage vector diagram is given in Fig. 210. OV represents the supply voltage and VA and AB the secondary voltages of the two regulators. The voltages VA and AB have been rotated in clockwise and counter-clockwise directions respectively, through the angle γ, from the position of maximum boost. The maximum boost is VC = VA + AB, the arithmetic sum of the two secondary voltages, while the maximum negative boost similarly is VD, giving a resultant voltage OD. In the vector diagram, the actual boost is the resultant of VA and AB or VB, and it will be clear that the phase shift of one regulator is neutralized by the phase shift of the other, so that the resultant boost is always in phase with the circuit voltage. When the phase shift γ is 90 degrees, it will be evident that the resultant of VA and AB is zero so that the total secondary windings on each phase may be short-circuited, as shewn in Fig. 200, and the primaries disconnected from the supply, thus saving the losses while the regulator is not required. This advantage is shared with the scheme employing three single-phase induction regulators. The single-type polyphase regulator cannot be taken out of service in this manner since the secondary voltage cannot be reduced to zero. Single-phase regulators are not usually employed in three-phase .high-voltage systems since, due to the small size of each unit and the losses in the tertiary winding, the cost is higher and the efficiency lower than in the case of the polyphase regulator.

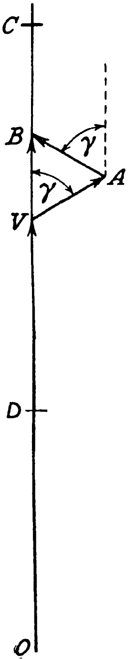

Fig. 210.

The Moving-coil Voltage Regulator.—The moving-coil regulator consists essentially of a laminated core with two fixed coils (see Fig. 211), one, *ar*, placed at the top of the limb, and the other, *b*, at the bottom. A moving coil, *s*, short-circuited upon itself, also surrounds the same limb but is free to move and to occupy any position between *ar* and *b*. When the coil *s* is midway between the two fixed coils, as shewn in the diagram, it has no effect upon either of the fixed coils. Under this condition, if a voltage of 100 is applied to the terminals A and B, there will be a potential difference of 50 volts across coils *a* and *b* respectively, and the flux paths will clearly be as indicated by the dotted lines, since *a* and *b* are wound in opposition. In fact, these two coils may be regarded as two exactly equal impedances.

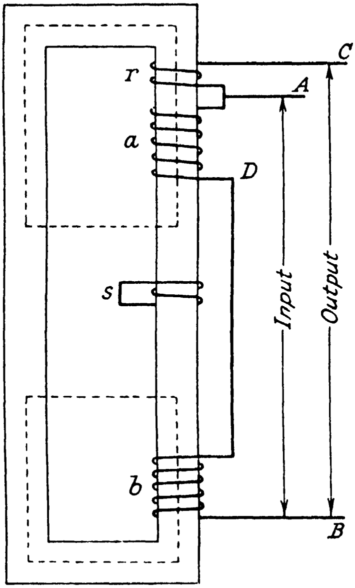

FIG. 211.

Now imagine the moving coil *s* to occupy a position immediately beneath coil *a*. Coils *a* and *s* will then behave as the primary and secondary of a short-circuited transformer, with the result that the flux linking with coil *a* will be reduced to a low value. Consequently, the impedance of this coil will also be reduced, and now the greater part of the terminal voltage will be absorbed by coil *b*. Conversely, if coil *s* be moved until it occupies a position immediately above coil *b*, the greater part of the terminal voltage will now appear across coil *a*. Hence it will be evident that as the coil *s* is progressively moved towards either of the fixed coils, the impedance of the fixed coil concerned will be progressively reduced and the voltage across the fixed coil remote from *s* will be correspondingly increased. The coil *s* may therefore be likened to a gate which prevents the penetration of magnetic lines of force through it.

Referring again to Fig. 211, it will be seen that coil *r* is added to coil *a*, and the voltage induced in *r* will bear a definite relationship to the voltage applied across coil *a*. Coils *a* and *r* together comprise a step-up auto-transformer, the input and output terminals being respectively DA and DC. Suppose, for example, that coils *a* and *b* each have 50 turns and coil *r* has 5 turns,* then when *s* is midway between *a* and *b*, the voltage between terminals BC will be $50 + 50 + 5 = 105$ volts.

If, now, coil *s* is adjacent to coil *a*, and under this condition the flux linking with *a* and *r* is so reduced that the voltage across coil *a* is 5 volts, then the voltage across BC will be $95 + 5 + 0{\cdot}5 = 100{\cdot}5$ volts.

Conversely, when coil *s* is adjacent to coil *b*, and assuming in this case that the voltage across this coil is also reduced to 5 volts, then the voltage across BC will be $5 + 95 + 9{\cdot}5 = 109{\cdot}5$ volts. The two latter conditions are shewn diagrammatically in Fig. 212. Hence it will be evident that by moving coil *s* from the top to the bottom of the limb, the voltage across the output terminals BC will increase smoothly from 100·5 to 109·5 volts, and the amount of voltage variation obtainable can be increased by increasing the number of turns of coil *r*.

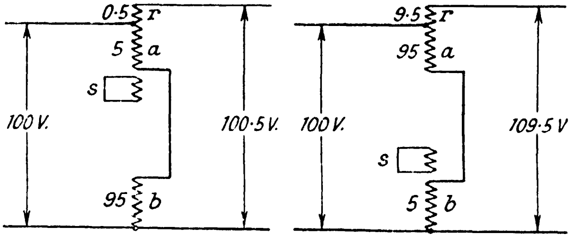

FIG. 212.

By reversing the connexions of coil *r*, its voltage would be subtracted from the input voltage, and the output voltage would then vary from $95 + 5 - 0{\cdot}5 = 99{\cdot}5$ when *s* is adjacent to *a*, to $5 + 95 - 9{\cdot}5 = 90{\cdot}5$ when *s* is adjacent to *b*. If both positive and negative boosts are required, a further fixed coil *t*, similar to *r*, is provided adjacent to coil *b*, so that coils *b* and *t* together form another auto-transformer. The arrangement is shewn in Fig. 213. If coil *t* also has 5 turns and its connexions reversed, as shewn in the diagram, then when the moving coil *s* is adjacent to *a*, the output voltage will be $95 - 9{\cdot}5 + 5 + 0{\cdot}5 = 91$ volts, and when *s* is adjacent to *b*,

---

* The number of turns on coil *s* is immaterial, since its function is to provide opposing ampere-turns.

the output voltage is $5 - 0{\cdot}5 + 95 + 9{\cdot}5 = 109$ volts. By the choice of suitable numbers of turns for coils r and t, any desired voltage variation can be obtained.

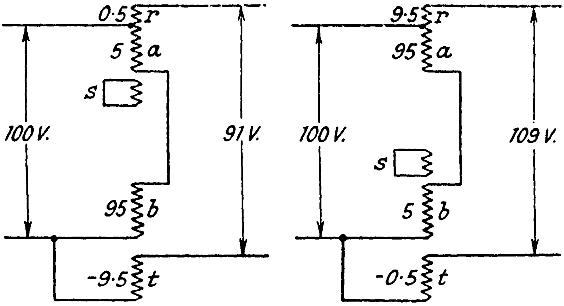

FIG. 213.

The moving-coil regulator possesses the same advantages of infinite voltage variation, without switching, as the induction regulator, and can be adapted to remote or automatic operation by similar means to those employed in connexion with the induction regulator.

Position of the Booster.—In the case of an interconnector between two power stations, the booster should preferably be located at the sending end of the line. Fig. 214 shews the booster located at the receiving end and the line NP represents the voltage gradient along the interconnector, while PR is the voltage boost necessary to compensate for the voltage drop

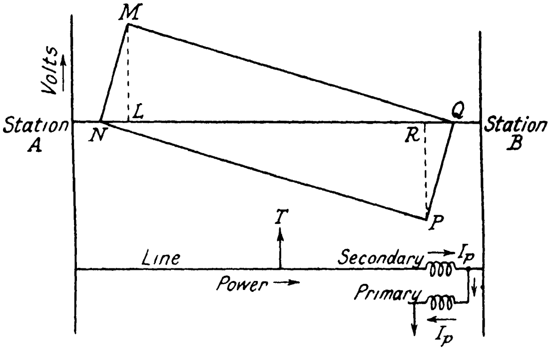

FIG. 214.

in the line. If, on the other hand, the booster was located at the sending end, it will be evident that the boost voltage ML will result in a higher average voltage along the interconnector, MQ being the gradient in this case. This higher average voltage means a smaller current to be transmitted for a given received kVA, and due to this the booster size can be reduced, while the transmission losses will also be reduced. Finally, it has been shewn in the previous chapter that the synchronizing power of an interconnector is proportional to the product of the voltages at the sending and receiving ends, i.e., proportional to the square of the mean voltage, so that the synchronizing power will be increased if the booster is located at the sending end. If the line supplies power at an intermediate point such as T, it will clearly be necessary to install some voltage-regulating apparatus at this position.

If the booster, located at the receiving end, takes the form of an induction regulator as shewn in the diagram, the primary current must obviously pass through the secondary winding because the primary must be connected to the busbar side of the secondary in order that a constant voltage may be impressed on it. Consequently the cross-section of the secondary turns must be correspondingly increased, thus again increasing the size of the regulator.

Quadrature Voltage Boosters.—It has been shewn in the preceding chapter that, in order to control the distribution of current in a ring main into which three or more power

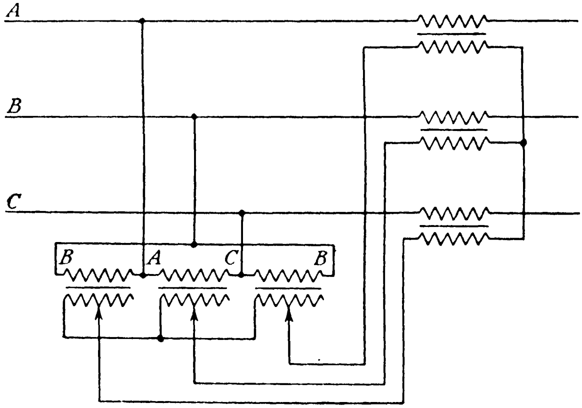

Fig. 215.

stations are feeding, a booster which provides a variable quadrature voltage component is necessary for each closed loop. It will be clear, from considerations of economy, that this booster should preferably be connected in the feeder which carries the smallest load.

A scheme for providing quadrature boost is shewn in Fig. 215. An exciting transformer has its primary windings connected in delta across lines A, B and C. The secondary windings, equipped with tap-changing gear, are connected in star and supply the primary windings of the quadrature boosting transformer, the latter also being connected in star. Referring now to the vector diagram given in Fig. 216(*a*), it will be seen that the voltages induced in the secondaries of the exciting transformer are AB, BC and CA, and these voltages are applied to the primary windings of the boosting transformer. From Fig. 215 it will be clear that AB is applied to line C; BC is applied to line A and CA to line B. These voltages are shewn as C′, A′ and B′ in Fig. 216(*b*), and the

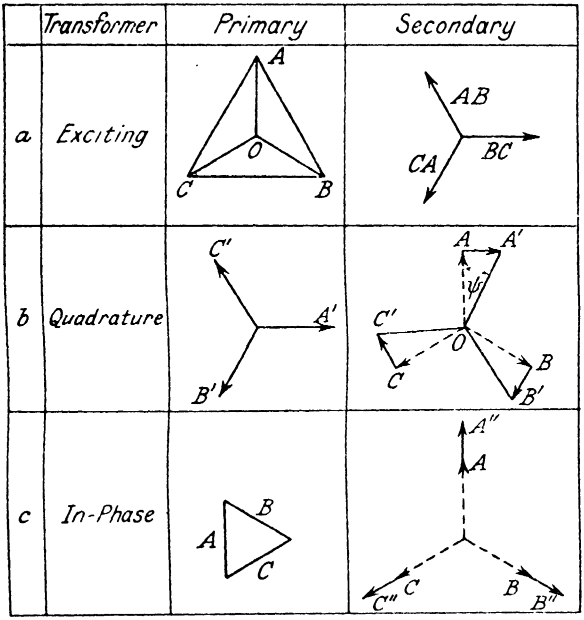

FIG. 216.

corresponding secondary voltages are evidently CC′, AA′ and BB′, in quadrature with the phase voltages OC, OA and OB. It will be evident that a quadrature voltage equal to 10 per cent of the phase voltage, e.g., AA′ = 10 per cent of OA, will cause a phase shift of approximately 6 degrees since $\frac{AA'}{OA} = \tan\psi = 0{\cdot}1$ and $\psi = 6$ degrees. Similarly 20 per cent quadrature voltage will shift the phase about 11 degrees and 36 per cent will be necessary for a phase shift of 20 degrees.

Fig. 217 shews a scheme for the production both of in-phase and quadrature voltage boosts into a ring main. In this case, the secondary windings of the exciting transformer have two independent sets of tappings, one set for the quadrature boost and the other for the in-phase boost. It will be clear that the primary windings of the in-phase boosting transformer must be connected in delta, in order that the secondary induced voltages shall be in phase with the circuit voltages. The vectors for the in-phase boosting transformer are given in Fig. 216(*c*) and for the quadrature booster in Fig. 216(*b*).

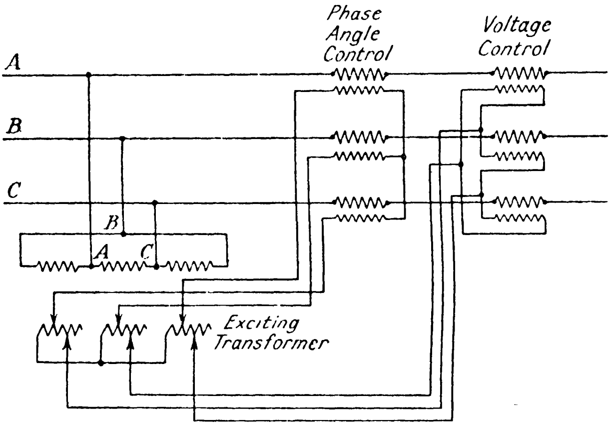

FIG. 217.

This scheme is, of course, perfectly flexible since the in-phase and quadrature boosts are independently controlled, but, however, it requires a relatively large amount of apparatus, including two sets of motor-driven tap-changing equipments. In practice, an approximation to the desired conditions can be made by varying both the in-phase and quadrature boosts simultaneously, and if this is permissible the apparatus can be simplified. The scheme is to inject a boost displaced by 60 degrees from the phase voltage, as shewn in Fig. 218. OA, OB and OC are the circuit voltages and – C, – A and – B are the boost voltages. As the latter are varied, it will be

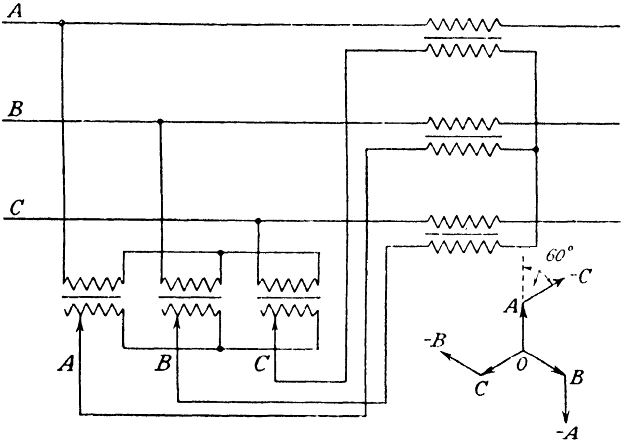

FIG. 218.

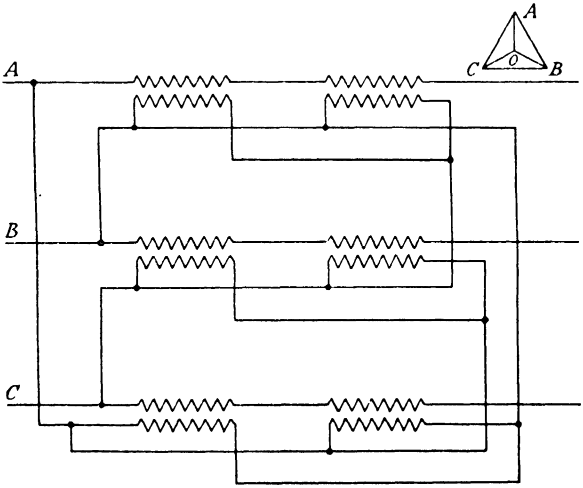

FIG. 219.

evident that both the magnitude and phase angle of the resultant voltages are varied.

A quadrature voltage may also be provided by the double-polyphase induction regulator. The primary windings must be connected in delta and a study of the diagram given in Fig. 219 will shew that the voltage BC is injected into line A, voltage CA is injected into line B and voltage AB is injected into line C. Since the rotating magnetic fields are arranged to rotate in opposite directions, the resultant boost voltage VB (Fig. 220) is always in quadrature with the circuit voltage OV.

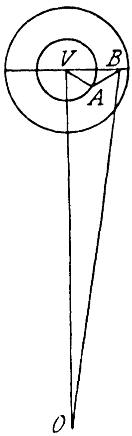

FIG. 220.

Automatic Operation.—When the operation of voltage regulating apparatus occurs at frequent intervals, it is evidently essential that the control should be automatic. The principle of automatic control, and the auxiliary apparatus employed for this purpose, are applicable both to induction regulators and to transformer tap-changing equipment. In the latter case, however, the automatic gear is required to carry out a precise and definite operation ; once the signal for a tap change has been received, the operation must be carried through all its successive stages with absolute certainty. It is also obviously desirable that the gear shall not operate for momentary voltage fluctuations, thereby largely increasing the wear and tear on the switchgear, and the gear must be designed so as to meet with the latter requirement. The induction regulator is, however, evidently free from the restrictions above referred to, and in this case, the gear will therefore be simpler.

Automatically Operated Induction Regulator.—Suppose the voltage has to be maintained constant at a point where the induction regulator is installed. Such a position might be at a substation at the receiving end of a line or at a load point tapped *en route.* Referring to Fig. 221, one line is shewn together with one phase of the regulator, IR. The control gear is fed through a potential transformer PT, the secondary winding of which is connected to the operating coil OC of the voltage regulating relay. This relay is shewn as a balanced beam type, and when the voltage is at its correct value, the counterpoise W balances the pull due to the ampere-turns of the operating coil and maintains the lever in the horizontal position. Thus both contacts L and R are open. If, now, the voltage of the feeder falls, the ampere-turns of the coil OC will be decreased, and the iron core will sink and cause the "raise" contact R to close. The raise contactor coil RC will thus be energized and this coil will close the contactor switch R, thereby connecting the servo-motor SM to the three-phase auxiliary supply. The servo-motor will rotate the regulator rotor, thus increasing the boost voltage. When the feeder voltage is again normal, the ampere-turns of the coil OC will be sufficient to break the contact R and thus the supply to the contactor coil RC. The contactor switch will then open, thereby allowing the spring S to apply the brake to the servo-motor, and the latter comes immediately to rest.

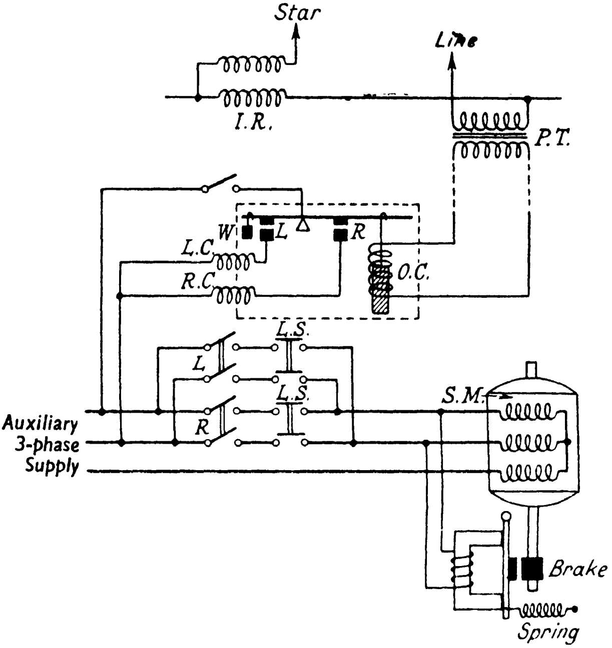

FIG. 221.

Precisely the same sequence occurs if the feeder voltage rises, but in this case the "lower" contacts L of the relay will close, thereby energizing the contactor coil LC and closing the contactor L. In this case the phase sequence of the auxiliary three-phase supply to the servo-motor is reversed and the latter rotates the induction regulator in the opposite direction. The contactor switches L and R are mechanically interlocked so that both cannot be closed at the same time. The limit switches LS are located on the shaft of the servo-motor and disconnect the supply thereto when the induction regulator reaches the positions corresponding to maximum and minimum boost.

If the regulator is located at the sending end of the feeder, and it is required to maintain the voltage constant at the receiving end, a line drop compensator must be employed. This apparatus has already been described in Chapter II (see pp. 45–46). If the line drop compensator shewn in Fig. 20, fed by current transformers as shewn, is inserted in series with the operating coil OC and potential transformer (see Fig. 221), then the voltage across this coil will be a miniature reproduction of the voltage at the receiving end of the feeder. The regulator will therefore operate to maintain constant the receiving end voltage.

Interconnector Power Factor Control by Induction Regulator.—If an induction regulator is employed in an interconnector between two power stations, its function, as shewn in the preceding chapter, is to control the power factor of the transmitted load. A scheme for this purpose is shewn in Fig. 222, from which it will be seen that a balanced beam relay

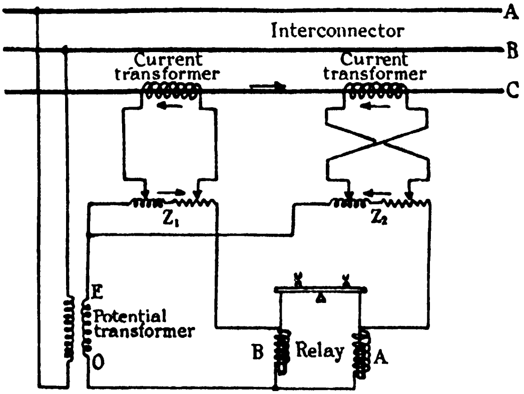

Fig. 222.

[*Journal I.E.E.*

across the relay operating coils will change to OB′ and OA′, so that the lever will rotate clockwise, thereby closing the " raise " contacts of the induction regulator, and reducing the power factor until the relay is in equilibrium. The sensitivity of this scheme diminishes as the interconnector load is reduced, that is, as OQ becomes small compared with OE, but when, as is often the case, the power transmitted does not fall below (say) half full-load value, satisfactory results can be obtained.

Automatic Operation of Induction Regulators in Parallel Feeders.—If two feeders are connected in parallel at both ends, and it is desired to insert a single-type polyphase induction regulator in each feeder, then the rotors should be mechanically coupled so that the same phase angle is introduced in each. If the regulators were not identically adjusted, circulating currents would be established in the feeders. Mechanical coupling of the regulators is not always possible, however, particularly in the case of three or more feeders, and in this case the regulators would be coupled electrically. A scheme for this purpose is shewn in Fig. 224. A potentiometer resistor is mounted on each regulator and the moving contact is geared to the rotor. One induction regulator, termed the "master," is automatically controlled (see Fig. 221), and as this operates, the moving contact travels along the potentiometer. Suppose this moves towards the left, then the potential at the point M becomes higher than that at N, and a current flows from left to right through the polarized relay PR, so that the " raise " contactors of the " trailer " induction regulators are closed. Thus the trailer regulators

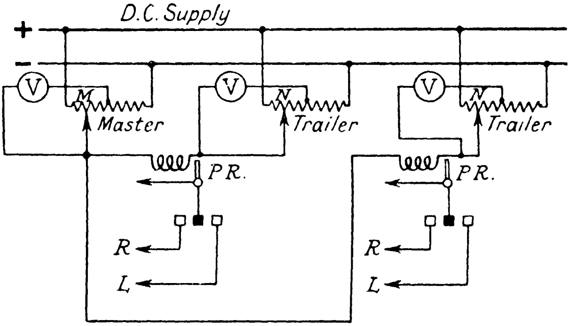

FIG. 224.

follow the master until the moving contacts N reach positions which are equipotential with M when the current through the relay coils vanishes and the relay contacts open. Similarly if the master potentiometer contact M moves from left to right, current flows through the relay coils in the opposite direction, thereby closing the "lower" contactors of the trailer regulators. Voltmeters scaled in degrees of regulator movement are connected between the midpoints of the potentiometer resistors and the moving contacts. These instruments enable any regulator to be brought to the same angular position as the others before the corresponding feeder is switched in.

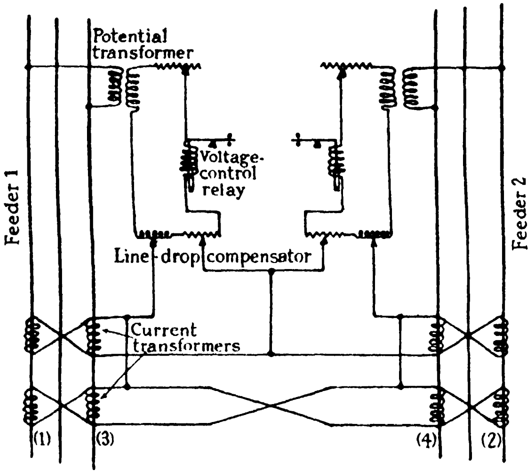

[*Journal I.E.E.*

FIG. 225.

Feeders with single-phase or double-type polyphase induction regulators may also be controlled by the potentiometer method above described, but in this case it is often desired to equalize the currents in the two paralleled feeders irrespective of the regulator position. A scheme for this purpose is shewn in Fig. 225. Two line drop compensator equipments are employed, as shewn, and are supplied from the upper set of current transformers. The lower pairs of current transformers (1) and (3), and (2) and (4) respectively, are connected in series with each other. If the currents in the two feeders are balanced, their secondary currents circulate freely, but if one feeder is more heavily loaded, the excess secondary current shirks the high impedance path of the other current transformer and is constrained to pass through both the line drop compensators, thereby raising the voltage of the lightly loaded feeder and reducing that of the heavily loaded feeder until the currents are equal. The current ratio of these equalizing current transformers can be reduced with advantage, thus increasing the corresponding secondary currents and enhancing the sensitivity of control.

Remote Control of Tap-changing Equipment.—A scheme for the operation of tap-changing gear is shewn in principle in Fig. 226. R and L represent the "raise" and "lower" push-button controls. The raise and lower contactor coils RC and LC are energized by the respective push-button controls by connecting the coils between two lines of

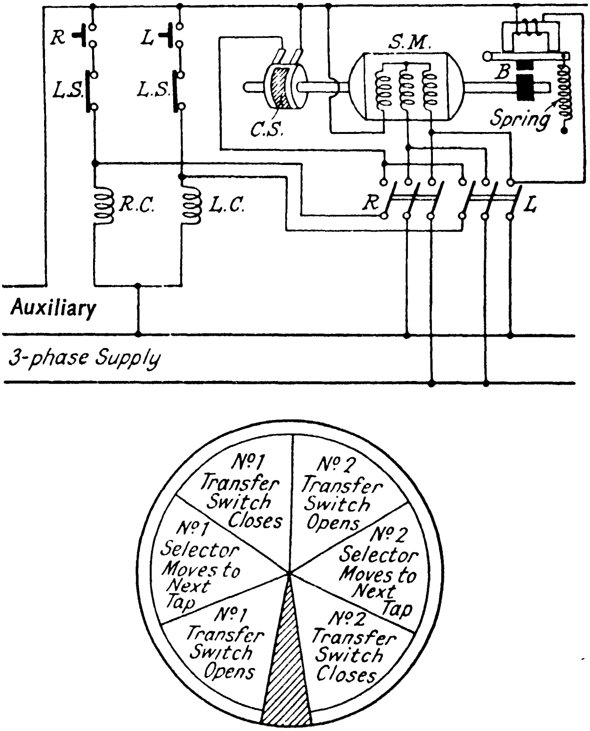

FIG. 226.

the auxiliary low-voltage three-phase supply. Suppose, for example, it is required to raise the voltage ; coil RC is energized, which closes the three-pole contactor switch R, thereby connecting the servo-motor SM to the three-phase supply by means of two contactor switches, one of which also energizes the control coil of the brake B, thereby removing the latter from the motor shaft. The motor accordingly commences to rotate in the direction required to raise the voltage, and drives the main tap-changing shaft. When the motor has moved through a fraction of a revolution, the two brushes are short-circuited by the contact strip CS, which is mounted on an insulated cylinder, but the length of the contact strip is about 340 degrees. The contact strip and brushes collaborate with the third contactor switch to provide a hold-in circuit which ensures that the contactor coil RC is energized while the motor makes one complete revolution.* If the tap change sequence is completed in one revolution, therefore, this operation, once initiated, is carried through with certainty. When the press button R is pressed and then released, the motor will make one revolution, after which the contact strip will de-energize the contactor coil, opening contactor R and allowing the brake B to function. The switching sequence will be clear from the clock diagram, in which clockwise direction is assumed.

In the scheme of Fig. 226 it will evidently be necessary to keep the contact switch R or L closed if the tap-changing gear is required to make more than one tap change. It would obviously be convenient to have a preselector form of control for this purpose which would enable the operator to select the desired tap and to leave the push-button control switch with the knowledge that the gear will move to the selected tap and then stop. A scheme for this purpose is shewn in Fig. 227, from which it will be seen that two potentiometer resistors are connected across a low-voltage auxiliary supply. The left-hand resistor is located at the control point and the moving contact of the other is geared to the tap-changer mechanism. The two movable contacts are connected to each other through a polarized relay, the contacts LL and RR thereof being connected respectively across the push-button control contacts L and R shewn in Fig. 226, so that the scheme of Fig. 227 is

---

* A duplicate to CS can be employed to connect a signal lamp across two lines, thereby giving a visual indication that a tap change is in progress.

added to that of Fig. 226. It will be evident that when the potentiometer contacts are in the same relative position, no current will flow through the relay coil, and the relay contacts will remain open. This condition prevails when the tap-changing gear is not operating. Suppose, now, it is desired that the tap-changer gear shall function until tap number 2 is in service. The control switch PS_1 is moved to contact number 2 when a current will flow through the relay coils, thereby tilting the relay switch (say) counter-clockwise and closing the " lower " contacts LL. A reference to Fig. 226 will shew that while the switch L remains closed, the tap-changing gear will continue to operate, at the same time turning the potentiometer switch PS_2 until it also reaches contact stud number 2, when the relay current will fall to zero and the relay contacts will open. If the control switch PS_1 is turned in the opposite direction, the " raise " contacts RR of the relay will be closed and the switch PS_2 will be turned to the right in a similar manner.

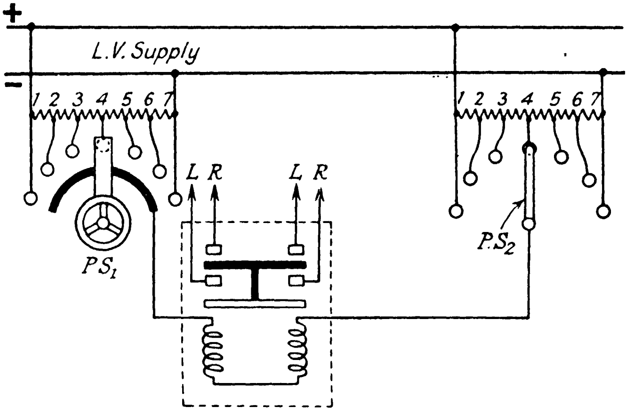

FIG. 227.

Automatic Control of Tap-changing Gear.—The gear can be arranged to maintain a constant voltage by using a voltage-regulating relay. This is shewn in Fig. 228, in which the operating coil of the relay OC is supplied from the voltage to be regulated through a potential transformer, as in the scheme shewn in Fig. 221. The operating coil closes either the " lower " or " raise " contacts L or R, thereby energizing the corresponding time delay relay TR_1 or TR_2. The latter are usually of the induction type in which the time delay is readily adjustable. After a pre-determined lapse of time, the appropriate relay contact TRC_1 or TRC_2 is closed, and since these contacts replace the push-button control switches L and R respectively, shewn in Fig. 226, the gear then operates as previously described. In this case also, therefore, the circuit in Fig. 228 is added to the nucleus scheme given in Fig. 226. The function of the time delay relays is to prevent the gear from responding to momentary voltage fluctuations, which are obviously undesirable from the operating viewpoint. The longer the time delay, the coarser is the voltage regulation, and *vice versâ*.

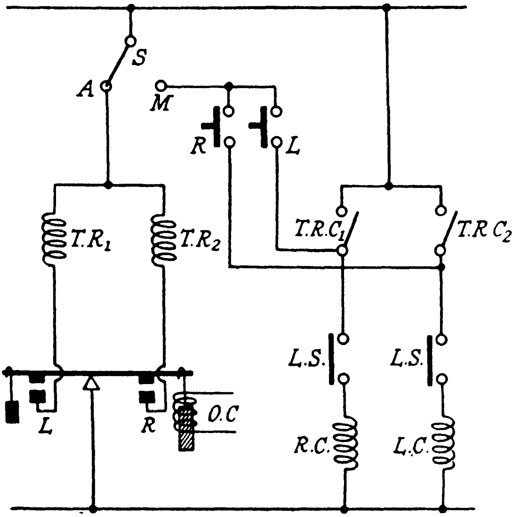

Fig. 228.

The voltage may be maintained constant at the receiving end of a feeder, when the tap-changing gear is located at the sending end, by including a line drop compensator in the circuit, connected as shewn in Fig. 20, the mode of operation of the tap-changing gear then being precisely similar to that of the induction regulator, when so controlled.

The two-way switch *s* (Fig. 228) provides a convenient means for changing over from automatic to manual control.

To change to the latter, contact M is used and puts in circuit the press-button contacts R and L.

Historical Development of the Art of Voltage Regulation.—The obvious method of introducing a voltage boost into a feeder is simply to connect therein a step-up auto-transformer provided with boosting tappings, and this simple scheme represents all that would ever be necessary if it were not for the difficulty of the booster contacts, which is accentuated when the current is large and when the voltage is high. The induction regulator was first developed as a means of eliminating the contact difficulty. The next advance is represented by the series boosting transformer working in conjunction with an exciting transformer (see Fig. 200); this obviated the necessity for high voltage insulation of the tap changer by allowing the latter to work at low voltages. Finally, the problem was completely solved by the installation of boosting tappings on the main transformer (see Fig. 193), and the development of on-load tap-changing gear. Previously the problem almost invariably involved the provision of some boost to an existing transformer, so that the series boosting transformer naturally had a certain vogue which, however, quickly became obsolete as far as new transformers were concerned once the on-load tap changer really became established and could be mounted on the main transformer itself, instead of being a separate item of plant as it was for many years.

The induction regulator and the moving-coil regulator fulfil largely the same purpose and may therefore be regarded as alternatives. They are employed for the introduction of a subsidiary boost into a feeder not provided with separate means of voltage adjustment.

CHAPTER XI

PRINCIPLES OF AUTOMATIC SUPERVISORY CONTROL

Introductory.—In recent years, the tendency of large electric supply undertakings has been to centralize the control of their systems. The adoption of centralized control in this country has become inevitable ; due to the interconnexion of stations it is necessary to operate each area of the National Electricity Scheme as an entity, since a switching operation at any station naturally reacts upon the other stations and the resultant effect cannot be judged unless these reactions can be visualized. Initially it was considered that this problem could be solved by a telephone communication system connecting the control point and the various stations involved, but difficulties were encountered due to delays in the reception of important data which frequently resulted in incorrect switching operations being performed. At the same time, great advances were being made in the art of automatic telephony and it was realized that the same principles could be applied to the remote supervision and control of electric power equipment and, moreover, the apparatus employed in automatic telephony could be adapted to control power systems almost without modification. Thus the art of supervisory control forms a point of contact between power and communication engineering, and in order to obtain a clear understanding of the problems involved, it is necessary to consider them from both viewpoints.

Supervisory control may be defined as the control of electrical apparatus from a position other than that at which it is installed, and in the case of interconnected power systems it has important advantages over manual control. It enables the control engineer to be physically isolated, thereby permitting him to view and to consider the technical operation of the system as a whole, while in times of system disturbance, being removed from the scene of confusion, he can think and act calmly. A further, and probably the most important, reason is financial, since the adoption of supervisory control enables the personnel at important substations and switching stations to be released for other duties.

Typical Apparatus to be Remote Controlled.—In general, any apparatus which can be adapted to electrical operation may be arranged for supervisory control. The following list represents the more usual facilities which are in demand in the case of a power system :

(1) Open and close circuit breakers and isolators.
(2) Transformer tap-changing.
(3) Meter readings.
(4) Starting-up and shutting-down of rotary converters.
(5) Switching of mercury-arc rectifiers.
(6) Telephone communication.

Centralized indicating equipment is almost invariably associated with each supervisory control system for the purpose of informing the control engineer at all times of the positions of distant circuit breakers, etc., and to give a special alarm signal immediately any change occurs, either due to automatic tripping or as a result of a deliberate remote control selection and operation by the control engineer.

A further and interesting application is to utilize the gear for indicating the weather conditions in different parts of the supply area, thereby enabling the control engineer to forecast the lighting demand. This may be achieved by means of light-sensitive cells installed at strategic points, the corresponding readings of the lumen meters associated with the cells being transmitted to the control room by the supervisory gear.

Signalling Channels.—Remote control of apparatus from a distant point in the same building is a matter which presents little difficulty ; owing to the short distances involved, the cost of the necessary control cables, which do not have to be buried, is not a serious matter. In the case of supervisory control, apparatus located at a point many miles distant from the control point has to be operated, so that the cost of the pilot wires becomes a matter of importance.

All the apparatus in a station can be remote controlled by means of only two pilot wires linking the station with the control room. If, however, additional pilots can be provided, the amount and complexity of the apparatus required for supervisory control may be reduced and it will therefore be evident that a correct decision for the number of pilots requires a knowledge of the actual system. In the case of a station located not more than half a mile from the control room, a separate channel for each piece of apparatus controlled might be justified, but where a station is located at a considerable distance from the control room, the cost of installing even one pair of pilot wires may be prohibitive. In such a case, a channel is sometimes rented from the Telephone Administration, but this has the inherent disadvantage that the continuity and maintenance of the lines are not controlled by the supply authority. An alternative is to employ carrier currents superimposed on the power lines, this system possessing the advantage that the power lines have, of course, a high factor of safety.

Simple Schemes for Automatic Control.—Fig. 229 shews a scheme for the case in which the distance between the station and control room is so short that the provision of the pilot

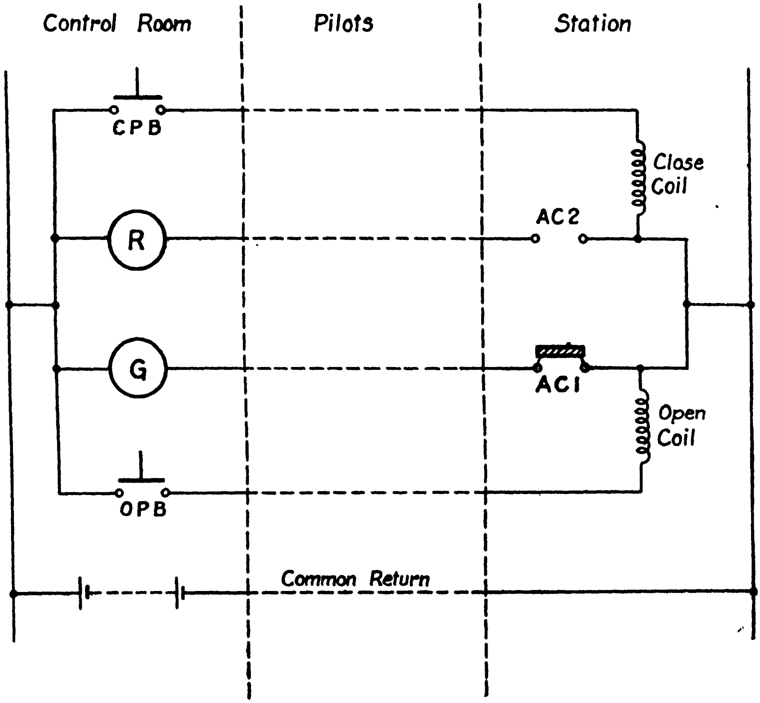

FIG. 229.

wires becomes a matter of small consequence. The method involves four wires for each remote controlled switch and a common return wire for all switches. The diagram shews the condition where the circuit breaker is open and the green lamp G is alight. If the " close " push-button control CPB is depressed, the close coil of the circuit breaker is energized. The contacts AC1 and AC2 are located on the circuit breaker mechanism and when the circuit breaker is closed, the contacts AC1 are opened and AC2 are closed, thereby extinguishing the green lamp and illuminating the red lamp R in the control room. It will therefore be evident that the scheme not only enables the circuit breaker to be operated from the control room, but gives a signal to the operation engineer that the breaker has actually operated. Moreover, the indicating lamps, forming part of the system circuit diagram, shew the positions of all circuit breakers at a glance.

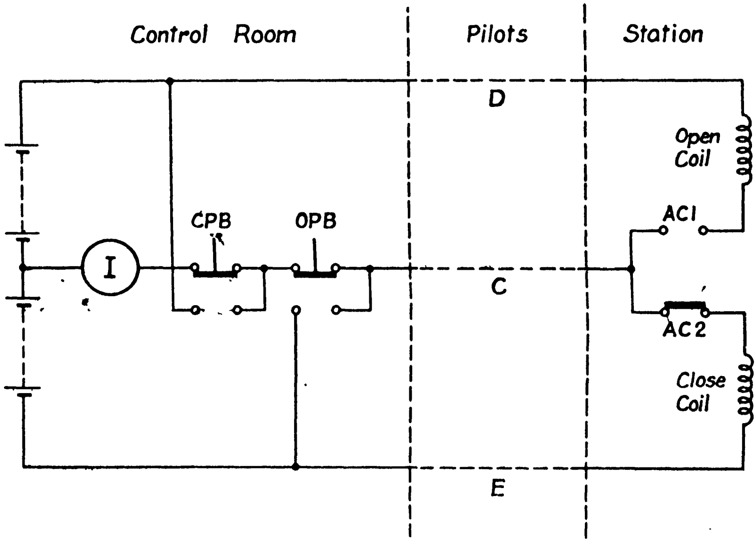

Fig. 230.

A system, developed by Bertram Thomas, Ltd., utilizes one pilot only per circuit breaker in addition to two battery pilots which are common to all the control circuits. The arrangement is shewn in Fig. 230, the condition shewn being for the open position of the circuit breaker, in which case a current passes through the indicator I (a centre-zero, moving-coil voltmeter) from left to right. Pilots D and E are the common battery pilots, while pilot C is the circuit breaker pilot and this latter is connected to the midpoint of the battery. If the circuit breaker is to be closed, push-button CPB is depressed when the total battery voltage is applied across the circuit breaker " close " coil. Consequently the circuit breaker closes and contacts AC2 are opened and AC1 closed. When control button CPB is released, current passes through the indicator I from right to left, thus I shews that the circuit breaker has actually operated and provides a visual indication of the conditions. Additional control gear for further circuits is connected in parallel with the gear shewn in the diagram.

Single Channel Systems.—It will be obvious that in the case of the simple systems above described, the apparatus required at the control point and at the station is very simple. If, however, the distance between these two points is considerable, it becomes impracticable to provide a large number of pilots, as previously mentioned, but the provision of two pilots and additional apparatus at the terminal points becomes possible. It will therefore be necessary first to describe the components employed before considering the complete scheme.

The Uniselector Switch.—Fig. 231 shews diagrammatically a type of rotary selector switch used both in automatic telephony and in remote supervisory control systems. The shaft S carries one or more wipers, W1, W2, rigidly fixed to it, and is rotated by means of a ratchet wheel RW driven by a feed pawl FP, the latter being pivoted at the end of a bell crank BC which is itself pivoted at x. The bell crank carries an armature A which is attracted towards the driving magnet DM each time its operating coil is energized. When the armature is attracted, the feed pawl FP moves idly over one tooth of the ratchet wheel RW, and during the stroke of A the flat spring LS is deflected and the insulated stud B fixed at its lower end separates the interrupter contact springs. When the driving magnet coil is de-energized, the flat spring LS brings the bell crank BC back to its normal position, and at the same time the feed pawl FP pulls the ratchet wheel in a clockwise direction through the space of one tooth, and with it the shaft and wipers. If the driving magnet DM is made to carry a train of current impulses, the wipers make contact step by step with a number of contacts C fixed radially as shewn between insulating strips clamped between metal end plates F. The wipers are fed through connexions *b*1 and *b*2. It will be seen that the wipers are double-ended and their contacts come into operation alternately after each half-revolution. At the end of the shaft, an arm ONA is rigidly attached, and when the selector switch is in the "home" position this arm closes contacts 1 and 2 of the two-way switch ONS. Directly the selector switch moves off the home position contacts 1 and 2 are broken and contacts 2 and 3 are made. It will be evident that the wiper arms actually move forward one step when the driving magnet winding is de-energized. It will therefore be observed that the uni-selector operates on what is called the "reversed drive" principle, and that the wiper assembly is stepped in one direction only. Since the interrupter springs *is* open their contacts when the armature is attracted, a little consideration will make it evident that if these contacts are connected in series with the driving magnet winding, the selector switch will step the wipers over the contacts continuously until the

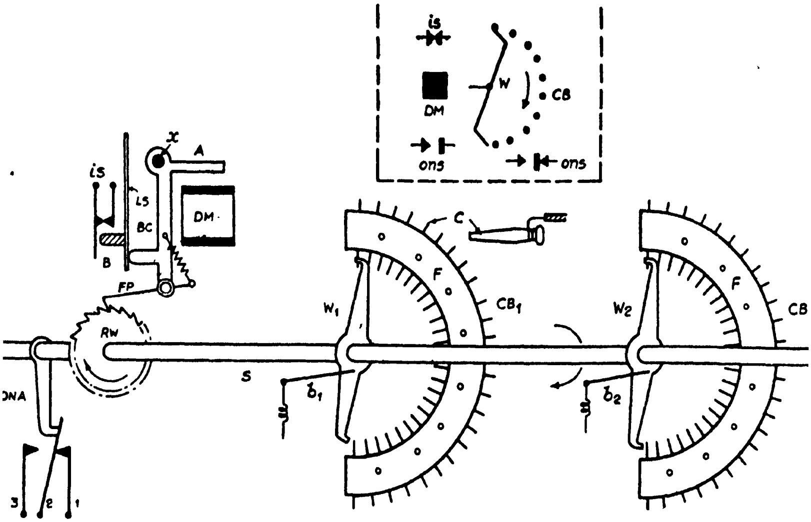

FIG. 231.

[*Journal I.E.E.*

circuit is broken. This is termed the "self-driven action." The interrupter contacts are adjusted to open just as the pawl carries over the tip of the next tooth of the ratchet wheel. When connected in this manner the wipers step at about 65 steps per second. The self-driven action is normally employed for returning the wipers to the "home" or start position when an operation has been completed. Usually, however, the uniselector is operated in conjunction with a relay, the contacts of which directly control the circuit of the driving magnet. With this form of drive, the wipers can be stepped at the rate of approximately 10 steps per second.

Relays.—The general type of relay employed in supervisory control circuits is shewn in Fig. 232(*a*). The armature A is pivoted from an L-shaped iron bar B which also supports the core C surrounded by the operating coil. A bent arm D extended from the armature carries an insulated knob, which, when A is attracted, closes the pair of contacts mounted on springs, the latter being supported between layers of insulating material. A further pair of contacts F may also be closed by means of the insulated buffer G, the length of which determines the time interval between the closing of E and F. Additional pairs of contacts can obviously be employed in the same manner if desired. Fig. 232(*b*) shews how such a relay is usually represented in diagrams.

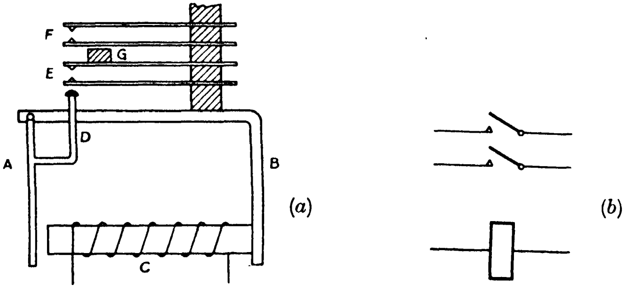

[*A.T. & E. Co.*

FIG. 232.

Fig. 233(*a*) shews the mechanism of a similar type of relay, but with the addition of a solid copper ring S surrounding the core at the armature end. When the relay operating winding is energized, the growing flux generates eddy currents in the ring which, of course, delays the rate of rise of the flux.

When the winding is de-energized, the rate of decrease of the flux is also delayed. Consequently the relay both closes and opens slowly and is thus termed a " slow operating " relay. Fig. 233(*b*) shews the usual diagrammatic representation of this relay.

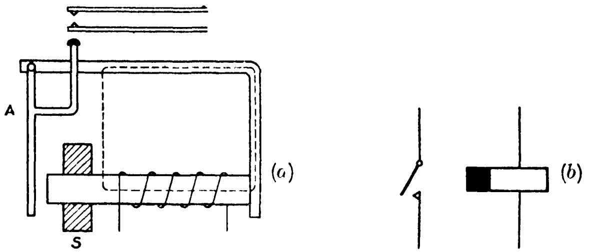

[*A.T. & E. Co.*

FIG. 233.

Referring back to Fig. 232(*a*), if the core C is of cobalt steel and permanently magnetized, the relay will operate when the current in the operating coil is in a direction so as to increase the residual flux, but will not operate when the current is reversed. Thus the relay is polarized.

Photographs of the uniselector switch and of the relays above described are given in Fig. 234.

Diagrams.—The circuit diagrams depicting supervisory control systems are usually drawn on the " detached contact " principle. In power circuit diagrams the " attached contact " principle is employed in which all the contacts of a relay and its operating coil would be shewn together. In the detached contact principle, the various relay contacts may be separated from each other and also from the operating coil. For example, referring to Fig. 235, the relays N and R have their operating coils in series with the pilots. Each relay has three contacts and the latter are shewn in convenient positions, which are not necessarily close together or near the operating coils. It will be obvious that this method, which is widely employed in telephone circuits, greatly simplifies the diagrams. It will also be seen that batteries are not shewn, but their terminals are marked positive and negative. All points so marked are connected to the positive and negative terminals of the battery respectively. All operating windings are located adjacent to the negative terminals.

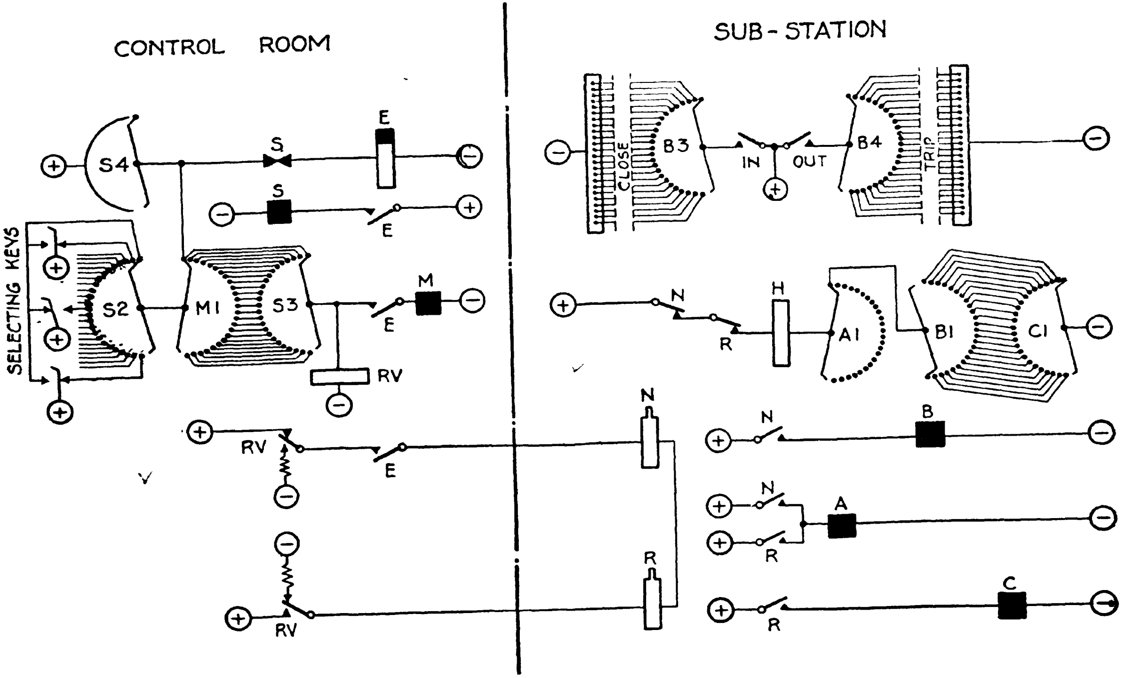

SELECTION

Fig. 235.

[A.T. & E. Co

Operation of Supervisory Control Systems.—The components above described are used in all single-channel systems of supervisory control, but the various circuit arrangements are very different. The scheme to be described may, however, be regarded as typical and will thus serve to illustrate the method of controlling circuit breakers. For this purpose, the gear is required first of all to select the circuit breaker to be operated when the appropriate signal is transmitted from the control room ; following this, a signal must be sent from the station shewing to the control room that the correct selection has been made and that the circuit breaker is now ready for operation ; after this, operation follows and finally the supervisory gear must send back an indication to this effect.

Selection of the Circuit Breaker.—The diagram (see Fig. 235) gives the schematic arrangements for selecting a circuit breaker for operation in the substation. S2, S3 and S4 are three contact banks of uniselector S, the wipers of which are mounted on a common shaft and are operated by the driving magnet S. The interruptor springs, also marked S, are shewn immediately above the driving magnet. An additional uniselector M comprising three contact banks (one only being shewn in the present diagram) is also provided, but in the case of this bank, the interruptor contact springs are not utilized. In the substation, a uniselector comprising four contact banks, B1, B2, B3, B4, is provided (contact bank B2 not being shewn in the present diagram), together with two further single contact bank uniselectors, A1 and C1.

All contact banks have 25 contacts, one being used for the "home" or starting position, the remainder being available for the control of circuit breakers or other devices.

It should be realized that by using single-ended wipers, as described in the previous section on uniselectors, and suitably connecting the banks of contacts, the capacity of the system would be increased to enable up to a total of 49 circuit breakers or other devices to be controlled. In fact, there is no limit to the number of circuit breakers and other devices that can be controlled and/or indicated on the same general principle.

Referring to contact bank S2, each contact stud is connected to a two-way selecting key, but in the diagram only three keys are shewn for convenience. Each selecting key corresponds to a particular circuit breaker at the substation.

Suppose, now, number 12 key is thrown to the operating position as shewn. A circuit is now established from the battery positive through the key to the first contact of S2, wipers of S2 and M1, first contact of M1, interruptor springs S, coil of slow operating relay E to battery negative. Thus the relay contacts close, thereby completing the circuit through the operating magnet S and separating the associated interruptor springs. Relay E accordingly releases and de-energizes the operating magnet so that the wipers S2, S3 and S4 take one step. All contacts of S4 are commonized so that a circuit is now established from battery positive, S4, interruptor springs and relay coil E to battery negative, and therefore uniselector S will continue to step over the 25 contacts (cf. Fig. 231), causing a train of 25 impulses to be transmitted to the substation by means of another contact of relay E. When the selecting key is thrown, a circuit is also established to relay RV *via* first contact of S2, wipers, first contact of M1 and S3, and when a further contact of relay E closes, this circuit is extended to the operating magnet M. Consequently uniselector M1 steps in synchronism with uniselector S.

The relay RV determines the polarity of the impulses transmitted to the substation. When the coil of this relay is energized, the two contacts RV are in the position shewn and the impulse polarity is " normal " and causes the polarized relay N at the substation to operate. When relay RV is de-energized, the direction of the transmitted impulses is reversed, since the contacts change the polarity of the battery, and the relay R at the substation is operated. It will be evident that when the wiper of S2 makes contact on the stud connected to the thrown selecting key, the circuits both to operating magnet coil M and relay RV are broken. Consequently the wiper of M1 stops on this contact and this uniselector is not again energized and all the remaining impulses transmitted to the substation are of reversed polarity.

Turning now to the substation, the polarized relays N and R each have three contacts, all of which are operated (i.e., either closed or opened) by each received impulse of the appropriate polarity. It will be evident that the first 12 impulses received operate relay N and complete circuits for uniselector operating magnet coils A and B. Consequently these uniselectors take 12 steps. Uniselector B comprises four banks of contacts, B1, B2, B3 and B4, but bank B2 is not shewn in this diagram. Since subsequent impulses are of

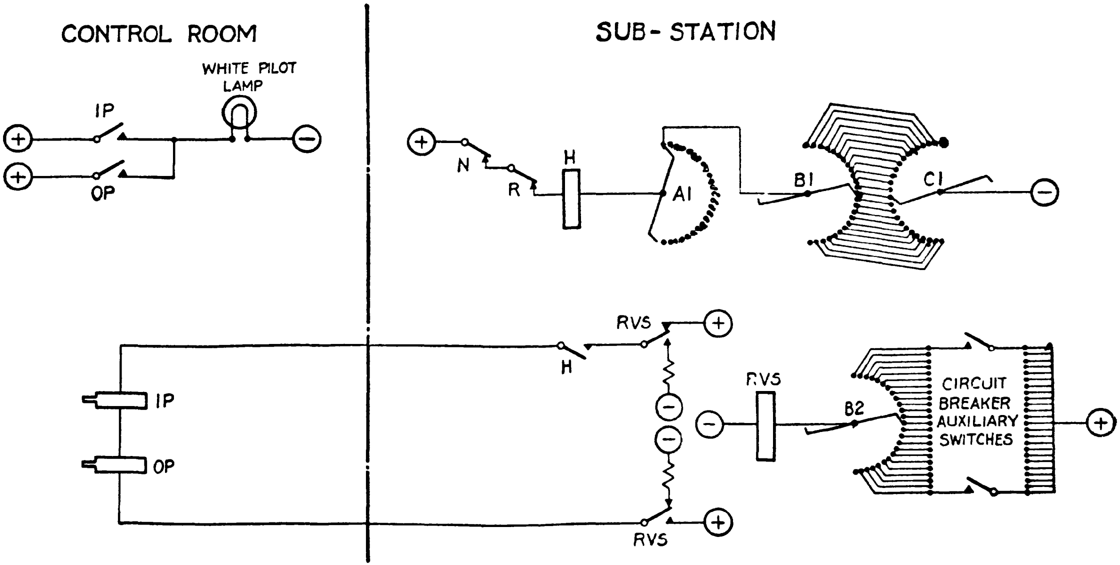

PROVING THE SELECTION

FIG. 236.

[A.T. & E. Co.

reversed polarity, uniselector B then stops and uniselector C becomes operative and takes 13 steps. Uniselector A which is, of course, operated both by normal and reverse impulses, continues to step over all contacts, and at the end of the cycle the wiper returns to contact 1, while contact 13 of uniselector B1 is cross-connected with contact 14 of uniselector C1. Since relay contacts N and R, in series with relay coil H, are closed, a circuit is established for this relay.

Proving the Selection of the Circuit Breaker.—Referring now to Fig. 236, the last movement of the uniselectors, both in the substation and in the control room, is utilized to change the terminal apparatus of the pilots as shewn, the battery now being connected at the substation end and the two polarized relays IP and OP being connected in series with each other and the pilots at the control room. When the contacts of relay H close, a current is sent through relay coils IP and OP. One of these relays operates, depending upon the direction of the current, thereby closing the circuit of the white pilot lamp and indicating that the selection has been correctly made. It will be evident that this indication cannot occur unless uniselector A1 has pulsed over the complete cycle of contacts and uniselectors B1 and C1 have responded to the correct numbers of normal and reversed impulses respectively, as shewn in the diagram.

The direction of the current transmitted from the substation to the control room, determining whether relay IP or OP operates, depends upon whether the coil of the reversing relay RVS is energized or not. It will be remembered that uniselector B2 has previously selected the circuit breaker to be operated. If this circuit breaker is open, the auxiliary switch, which is operated by the circuit breaker mechanism, is also open. Consequently the relay coil RVS is not energized and relay IP operates. Conversely, if the circuit breaker was closed, then the corresponding auxiliary switch would also be closed and in this event relay RVS would be energized, thereby reversing the direction of current through the pilots and operating relay OP. In either case, the white pilot lamp lights. The necessity for arranging for the reversal of current will be apparent later.

Circuit Breaker Operation.—Fig. 237 shews the wipers of uniselectors B3 and B4 on the contacts corresponding to the selected circuit breaker. It will be remembered that these

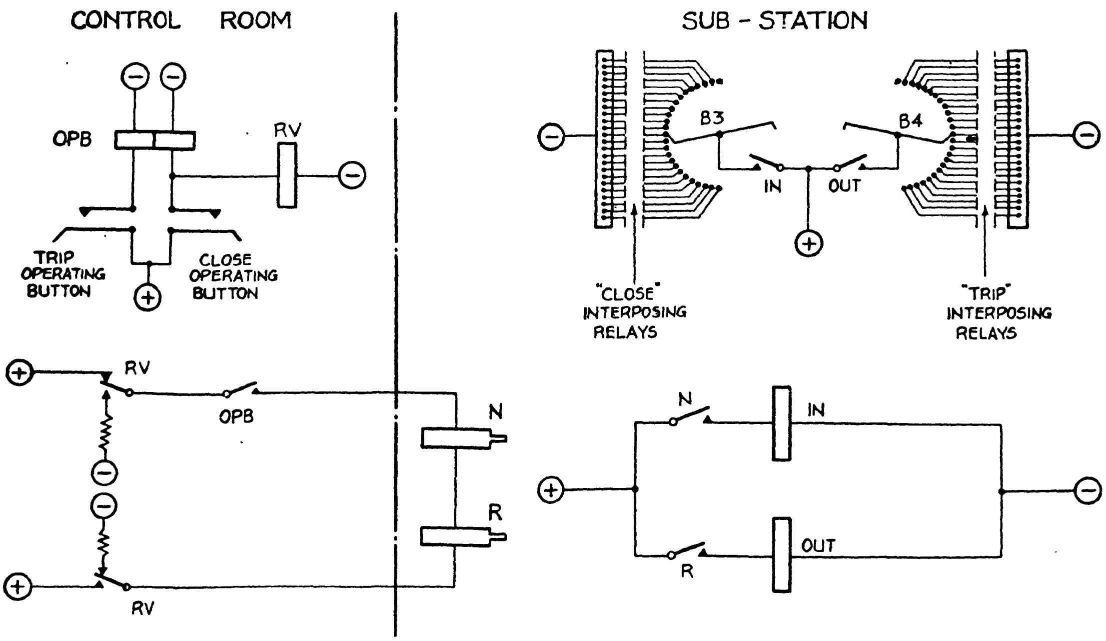

OPERATION

[A.T. & E. Co.

FIG. 237.

uniselectors were pulsed to this position during the circuit breaker selection (see Fig. 235). The action of depressing either operating button is utilized, by the aid of relays not shewn, to restore the battery connexions to the pilots at the control room end, and to connect another pair of polarized relays N and R in series with the pilots at the substation end. Suppose first of all that the circuit breaker is to be closed; the " close " operating button is depressed, thus completing the circuit for the " close " relay coil OPB and also for relay RV, the closing of the latter contacts causing the current through the pilots to be of normal polarity. Consequently relay N operates, completing a circuit through the coil of the relay marked " IN." The contacts of this relay therefore close, completing a circuit through the " close " interposing relay, and when the latter contacts close, the circuit breaker mechanism is actuated.

If the circuit breaker is to be opened, then the " trip " operating button is depressed and the " open " relay coil OPB is energized, but in this case the relay RV is not. Consequently a current of reversed polarity is sent through the pilots, thereby causing the polarized relay R to operate and complete the circuit through the " OUT " relay coil. The " trip " interposing relay will now be energized thereby opening the circuit breaker.

Indication of Circuit Breaker Position.—When the operate push-button is released, the line reverts to the condition shewn in Fig. 236; but, as the circuit breaker will now have changed position, the holding current from the substation will have been reversed, due to the action of relay RVS, which is under the control of the circuit breaker auxiliary contacts. Use is made of this feature to correct immediately the indication of the particular circuit breaker under control.

Automatic Indication of Change of Position of Circuit Breaker.—Immediately a circuit breaker automatically changes position, the terminal apparatus at the ends of the pilots is changed, irrespective of other conditions, to that shewn in Fig. 238, and the relay contacts RSR are closed (the coil of this relay is not shewn), thereby establishing a circuit through the slow-acting relay ES. When the double contacts of this relay close, a circuit through the driving magnet winding of uniselector D is completed and broken when the interruptor contact springs separate, and the contact-wipers of uniselector

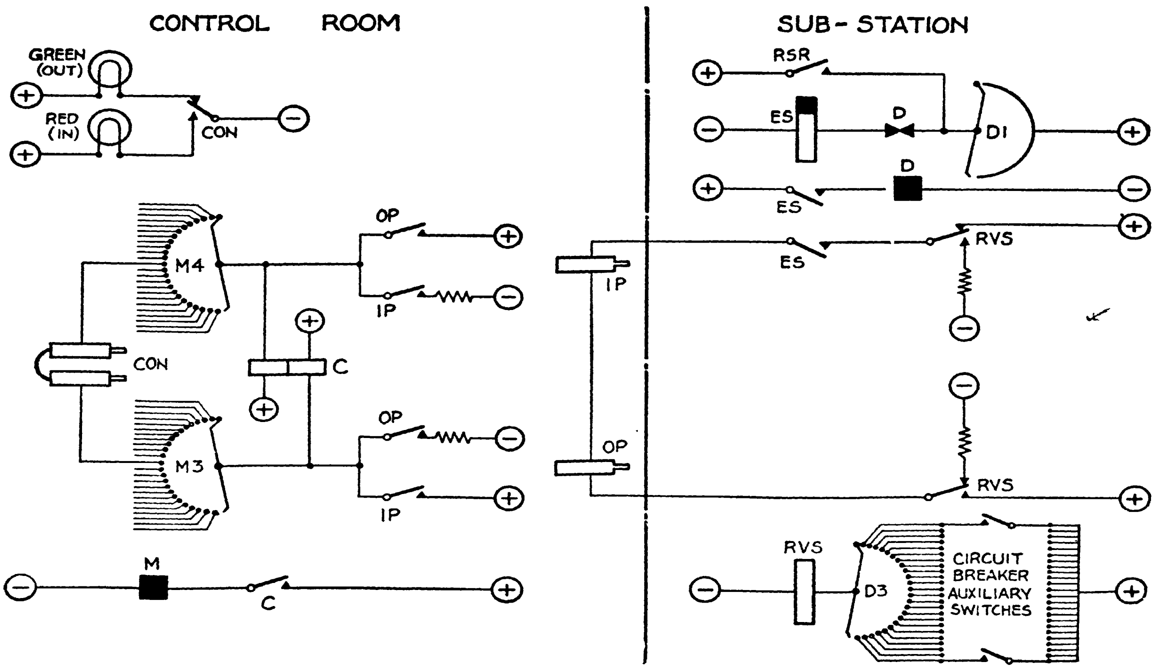

INDICATION

Fig. 238.

[A.T. & E. Co.

D make one step. The circuit breaker auxiliary switches, to which the contact studs of D3 are connected, are open when the circuit breakers are open, and closed when the circuit breakers are closed. It will be seen that all the contacts of wiper D1 are commonized so that after the first step, uniselector D steps over all the contacts, making a complete cycle. The relay RVS determines the polarity of the current pulse transmitted to the control room. When the circuit breaker auxiliary switch is closed, the pulse is normal and therefore operates relay IP, and when the auxiliary switch is open, RVS is not energized and therefore the pulse is reversed, operating relay OP.

Turning now to the control room, it will be evident from the diagram that relay C operates each time a current impulse is transmitted over the pilots, whether the impulse is normal or reversed, thus energizing the driving magnet coil of the two-bank uniselector M. Consequently M3 and M4 step in synchronism with D1 and D3.

The contacts of relay CON are operated by a current impulse in one direction and released by a current in the reverse direction and thereby control the red and green indication lamps as shewn. Duplicates of this indicating gear, consisting of relay CON and indicating lamps, are provided for each circuit breaker and connected to the appropriate contacts of banks M3 and M4. Thus when the position of any circuit breaker is changed, uniselectors D and M, stepping in unison over the complete cycle of contacts, check, and correct if necessary, the position of every circuit breaker in the station. This constitutes a most important feature of the gear.

Multiple Control.—A largely increased number of circuit breakers can be controlled and indicated, and contact remote meter readings can be obtained, by the adoption of multiple control. For example, it has been shewn (Fig. 235) that for the selection of one circuit breaker, 12 positive and 13 negative current pulses are required to be transmitted from the control room. For another circuit breaker, 7 positive and 18 negative pulses would be employed so that the complete cycle always consists of 25 pulses. The enlarged scheme requires two such sets of positive and negative current pulses. The first set is employed to select one group of controlled circuit breakers (or meters), and the second to select the particular individual device within the selected group.

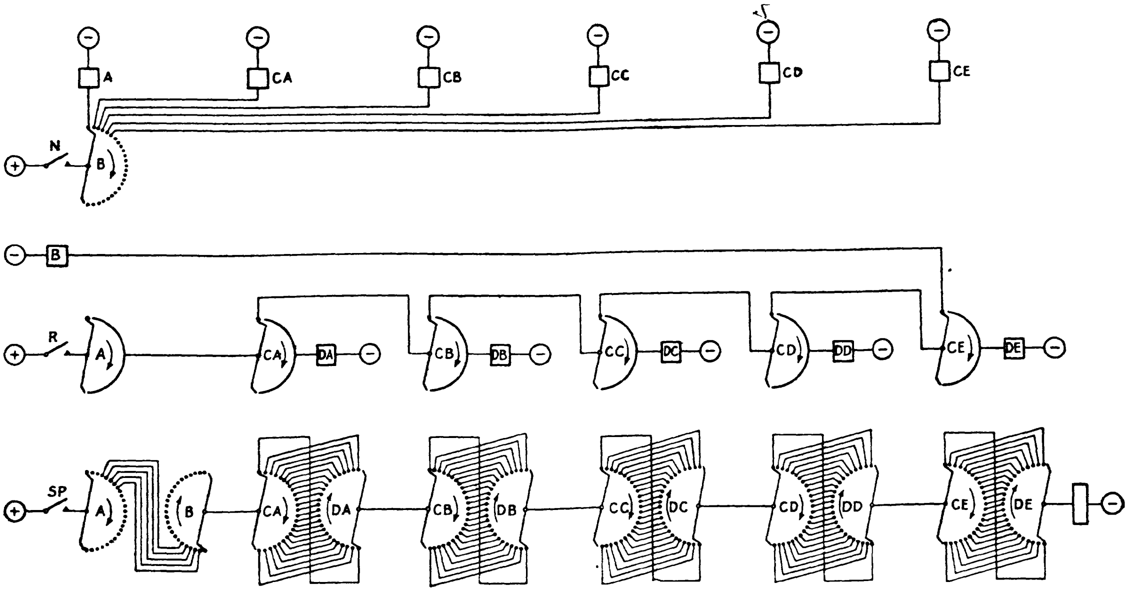

FIG. 239.

[A.T. & E. Co.

Fig. 239 shews the essential features of the scheme arranged for controlling 120 points, e.g., circuit breakers or other apparatus. N and R are the polarized relays located at the substation (cf. Fig. 235), A and B are the group uniselectors and CA to CE and DA to DE represent 5 pairs of apparatus uniselectors for circuit breakers or meters contained within their respective groups. Since all the contact banks comprise 25 contacts, the number of points controlled by this scheme is found by multiplying by 24 the number of contacts on each apparatus uniselector, excluding, of course, the " home " contact. The full development of this scheme would utilize 24 pairs of apparatus uniselectors, thus arranging for the control and indication of 576 points, so that the scheme is not only suitable for controlling electric power systems of the largest sizes, but it also provides ample facilities for extensions as and when these become necessary.

Considering now the system for 120 points, as shewn in Fig. 239, a complete cycle comprises a total of 33 current pulses; for example, a typical selected pulse train would consist of (*a*) for group selection, three positive and five negative pulses, and then (*b*) for individual circuit breaker selection, ten positive and fifteen negative pulses. Imagine now that 3 positive pulses have been received from the control room, thereby operating the contacts of relay N three times (Fig. 239). The wipers of uniselector A would then become positioned on the fourth set of contacts. The five negative current pulses next received from the control room will now operate the contacts of relay R five times thus completing the pulsing circuit of uniselector B, *via* wiper A on its contact arc and the wipers of uniselectors CA to CE on their " home " contacts. The wipers of uniselector B would thus become positioned on the sixth set of contacts, over which the next series of positive pulses from the contact of relay N to the winding of uniselector CE. The wipers of the latter thus become positioned of the eleventh set of contacts. When now the final set of 15 negative pulses are transmitted through the contact of relay R, they are directed to the winding of uniselector DE *via* wiper A on its contact arc, wipers of uniselectors CA to AD on their " home " contacts, and wiper of uniselector CE on its contact arc. The wipers of uniselector DE thus become positioned on the sixteenth set of contacts and thereby complete the following circuit: battery positive, operated contacts SP (these are arranged by the pulsing sequence to close on the completion of the sequence), wiper A on the fourth contact, wiper B on the sixth contact, wipers CA and DA to CD and DD on their " home " contacts, wiper CE on the eleventh contact, wiper DE on the sixteenth contact, winding of the circuit breaker operating relay to battery negative.

Contact Remote Metering.—The components above described and used for circuit breaker operation may also be employed for remote metering, utilizing, of course, the same pair of pilot cables. The system requires the attachment of a transmitter to each instrument from which readings are required to be transmitted to the control room. In the latter, a corresponding mechanical meter is installed, this consisting of a uniselector equipped with dial and pointer.

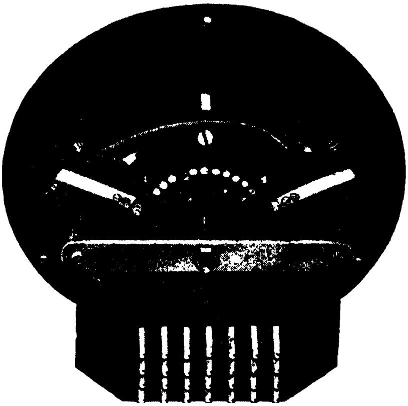

[A.T. & E. Co.

FIG. 240.

The Transmitter.—Details of the transmitter are shewn in Figs. 240 and 241. Referring to the section in Fig. 241, the spindle of the meter is lengthened to accommodate the transmitter. To the spindle is rigidly attached a spring contact arm which carries the bridging contacts as shewn; this arm therefore moves as the spindle rotates and, indeed, it may be regarded as an additional pointer. A circle of contact studs and sector plate (see diagram top right of Fig. 241 and also Fig. 240) is mounted on a bakelite insulating board and each contact corresponds to a particular reading of the instrument. When a reading of the instrument is to be transmitted to the control room, the magnetizing coils of the clamping magnets are energized, thereby causing the bakelite clamping ring to move towards the contact studs, constraining the bridging contacts to connect the particular contact stud with the sector plate, and at the same time to clamp the contact arm in the position corresponding to the reading of the meter.

The factor governing the number of contact studs is the desired accuracy of the meter reading. For example, in the case of a wattmeter reading up to 25,000 kW, twenty-five contact studs would provide readings in steps of 1,000 kW and the maximum error would therefore be 2 per cent. Greater accuracy than this could be secured by providing a greater number of contact studs.

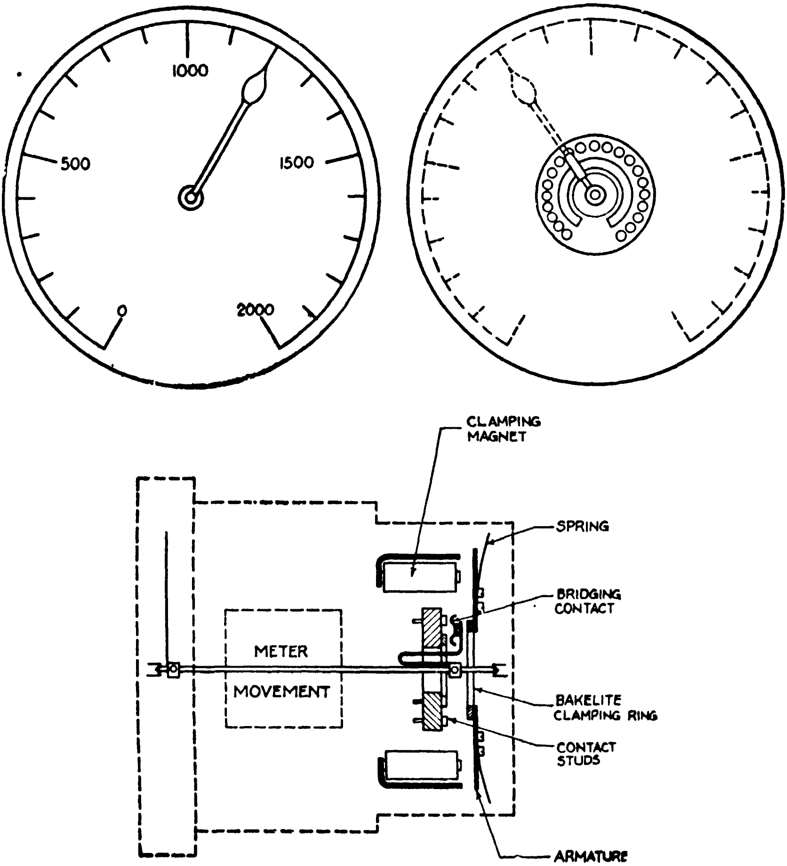

[*A.T. & E. Co.*

Fig. 241.

The Mechanical Meter.—Referring to Fig. 231, which shews diagrammatically a rotary switch uniselector, the action

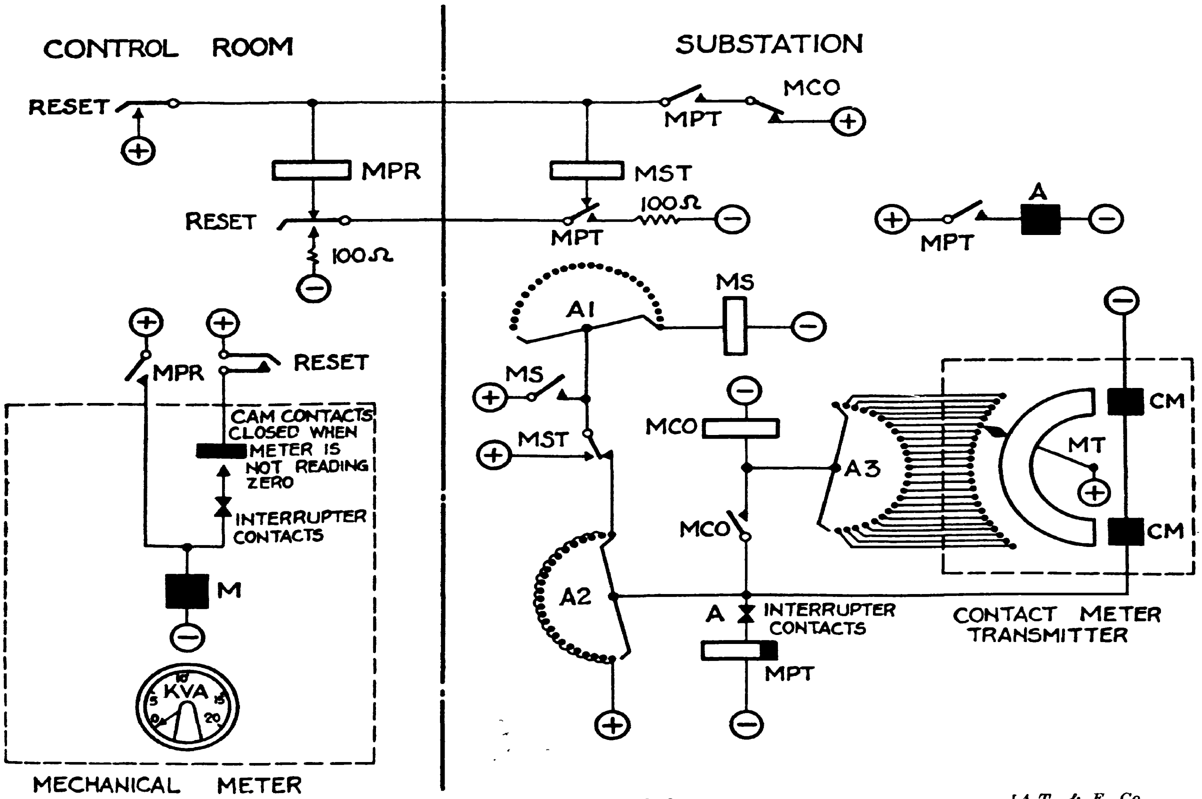

FIG. 242.

[A.T. & E. Co.

of which has previously been described, the mechanical meter consists of the operating mechanism, but the contact sectors are not required and are replaced by a dial. The pointer, which indicates on the dial, replaces the wipers. This arrangement will be clear if Fig. 231 is studied in conjunction with the mechanical meter in Fig. 242. Where meters are naturally associated, for example, the kW and kVAR of a feeder or generator, both of these may be indicated on one mechanical meter equipped with two pointers as shewn in Fig. 243. In such a case, a hollow sleeve would be mounted concentrically over the shaft S (see Fig. 231) and a separate ratchet wheel, operated by an additional mechanism, and pointer would be fixed to the sleeve.

Since it will be obvious that there is no restriction to the length of scale, mechanical meters are usually constructed with 300 degree scales and are, therefore, very easy to read. Small-size meters, fitted with three-inch diameter dials, are used on control desks and larger meters are employed on panel control boards.

Circuit Arrangement and Mode of Transmission.—The circuit diagram given in Fig. 242 shews the method of transmitting one meter reading only. This scheme may, of course, be extended to deal with any number of meters by appropriate multiplication of the equipment.

Referring to the diagram, when a meter reading is required, the reset key is first depressed. Contacts 1 and 2 of the off-normal switch ONS (Fig. 231) are closed since the mechanical meter is indicating the previous reading transmitted. A circuit through the operating magnet coil is therefore established so that the uniselector steps forward to the " home " position when the pointer is on zero and the switch ONS (cam contacts in Fig. 242) breaks the circuit. This operation is completed within a fraction of a second.

At the same time, relay MST at the substation is energized *via* the pilot wires and contacts MPT, which are normally in the position shewn. Relay contacts MST then operate, thereby establishing a circuit through relay coil MS, whose contacts close and remain closed until this circuit is eventually broken by wiper A1 moving off the first contact. Relay MST, however, releases when the " reset " key at the control room is released, thereby establishing a circuit through slow relay MPT *via* the closed contacts of MS, restored contacts of MST, first contact

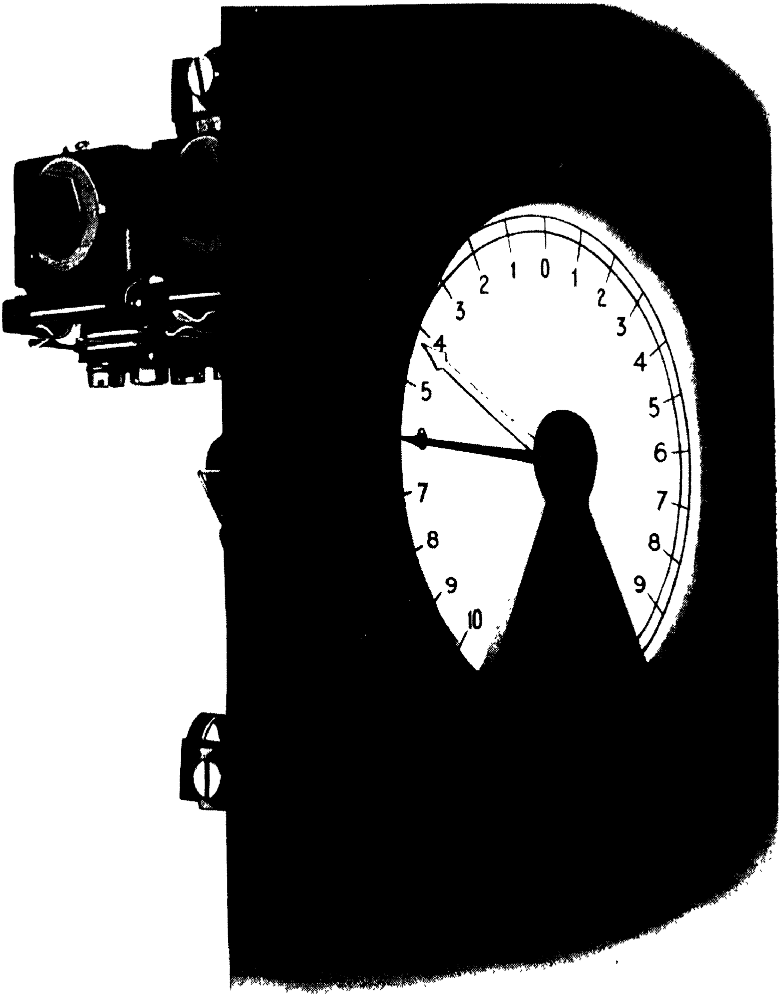

[A.T. & E. Co.

Fig. 243.

[*To face page* 348.

and wiper of contact bank A2 and interruptor contacts of uniselector A. At the same time, the clamping magnets CM of the transmitter associated with the meter being read are energized over the same path.

Relay MPT closes its contacts, thereby energizing the coil of the uniselector operating magnet A and immediately afterwards the interruptor contact springs of this uniselector part. Uniselector A therefore takes one step. Relay MS is now de-energized, but an alternative circuit for relay MPT and clamping magnets CM is established *via* contact bank A2 (whose contacts are commonized with the exception of the first). Thus A1, A2 and A3 step over the complete cycle of contacts, returning to the first contact.

For each step of the uniselector, contacts MPT in the pilots impulse relay MPR and the mechanical meter takes a corresponding step. It will be seen that the contacts of contact bank A3 are connected to corresponding contacts of the transmitter, and when the wiper reaches the contact corresponding to the meter reading, a circuit is established for relay MCO. The contact MCO, shewn under this relay, closes and the other contact in series with the pilot accordingly opens, thereby cutting off further impulses to the mechanical meter, the pointer of which now indicates the reading of the substation meter.

Relay MPT continues to operate, and the circuit through relay MCO is maintained *via* A2 until the wipers return to the first contact, when the circuit through these two relays and through coils CM is broken. All the equipment has now returned to the starting condition with the exception of the mechanical meter which continues to indicate the substation meter reading until a further reading is required. Since the clamping magnet coil CM is de-energized, the substation meter transmitter is now free to follow the fluctuations of the meter pointer.

Photo-telemetering.—The contact system of remote metering is admirably suited to readings required on demand and where a high degree of accuracy together with continuous indications are not necessary. Due, however, to the growth of power systems and interconnexion, it has become necessary in certain cases to provide indications of remotely situated meters continuously at the control room. An important example of this requirement is the case of an interconnector of relatively small kVA capacity in comparison with the loads on the systems connected by it. In such a case, the continuous indication of the load is obviously a matter of vital importance.

This requirement has resulted in the development of the photo-telemetering system which is now employed on the more important inter-area transmission lines of the National System and the method possesses the great advantage that, by utilizing different carrier frequencies it is possible simultaneously to transmit the readings of several meters over one channel, the latter being also used at the same time for telephone communication or for supervisory control purposes. The indication of each meter is transmitted at a given frequency and thus the only limit to the number of meters is the number of frequency bands that can be accommodated within the permissible frequency range. In addition, the method possesses the advantage of a high degree of accuracy and, moreover, the distance over which it can be employed is practically unlimited.

The basic principle of the method is to transmit a series of current impulses, the ratio of the time taken for the actual current impulses to a maximum time being the same as that of the actual instrument reading to the full-scale deflection. For example, suppose that a current of 100 milliamperes is transmitted for the maximum time, then the instrument at the receiving end will read 100 mA, but if this current is only transmitted for 20 per cent of the maximum time, then it will only read 20 mA, and so on.

Fig. 244 shews the mechanics of the transmitter. An opaque semicircular vane A is fitted to the rear end of the spindle of the instrument whose reading is to be transmitted. This vane completely covers the semicircular mirror B when the instrument reads zero and completely uncovers it when the pointer indicates full-scale deflection. A carriage is coupled to a small synchronous motor and this enables the two diametrically opposite lens prisms F to be rotated about the axis of the instrument spindle. Light from the gas-filled lamp D is focused and deflected by the lens prisms so that it is concentrated upon the mirror B and reflected therefrom on to the photoelectric cell G as shewn. If, now, the carriage is rotated by the synchronous motor at a speed of (say) 100 revolutions per minute, and the opaque vane is in the position shewn in the diagram (with about two-thirds of the mirror uncovered), it will be seen that the photo-electric cell is illuminated for about two-thirds of the total time. Thus the ratio of the time of illumination in one revolution to the time of one revolution of the carriage is a measure of the instrument reading.

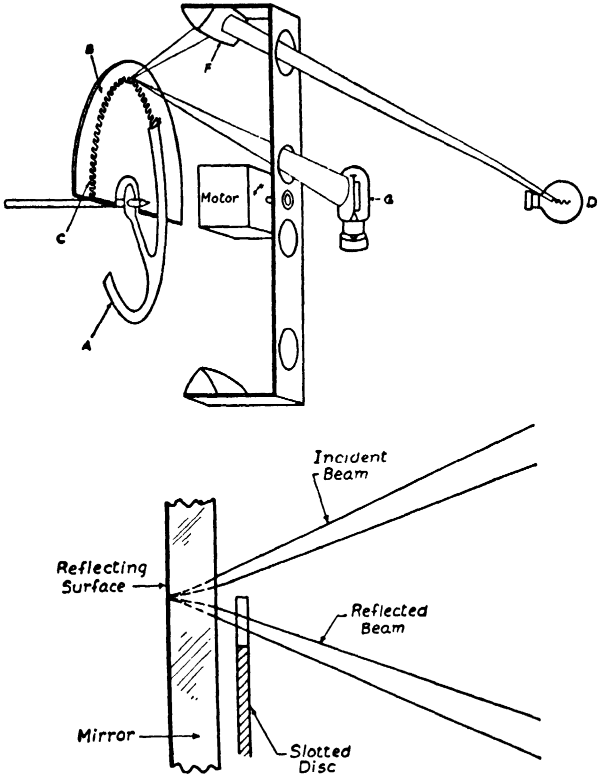

[*A.T. & E. Co.*

FIG. 244.

These optical readings must now be converted into currents of voice frequency in order to facilitate their transmission over commercial telephone channels. One method employed of generating the desired frequency is to interpose an opaque slotted disc C between the mirror and the vane (see Fig. 244), so that the light reflected on to the photo-electric cell is interrupted not only by the vane but also by each individual tooth on the slotted disc. The image formed by the lens is very narrow and can be absorbed completely by one tooth. The pitch of the teeth and the speed of rotation of the carriage are so arranged that the illumination received on the photo-electric cell is interrupted at the required voice frequency. The currents in the photo-electric cell corresponding to three instrument readings are shewn in Fig. 245; when the reading is nearly zero, the opaque vane masks nearly the whole of the scale and slotted disc and consequently only one or two teeth are scanned by the rotating impulse generator. When the instrument gives a maximum deflection, the whole of the slotted disc is scanned continuously.

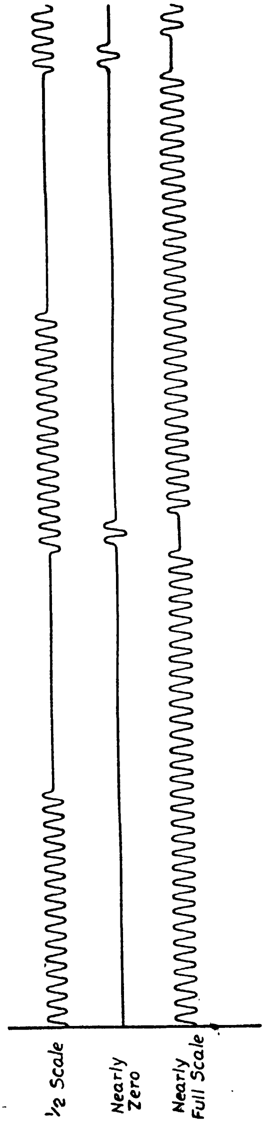

FIG. 245.

[A.T. & E. Co.

The output of the photo-electric cell is then amplified. Fig. 246 shews a typical two-stage transformer-coupled amplifier and it will be seen that the magnitude of the grid impulses received by the power valve AC/2P can be controlled by the 2,000-ohm potentiometer and thus the output can be adjusted to the required level.

An alternative scheme for generating the required frequency is to omit the slotted disc shewn in Fig. 244 and to superimpose the frequency required on the photo-electric cell current by means of a valve oscillator. The circuit for this purpose is given in Fig. 247, from which it will be seen that oscillations are set up by the AC/2P valve due to the condenser and the inductance of the transformer primary, the secondary being connected in the grid circuit. The output from this valve is impressed on to the screen of the screened-grid valve AC/SG. This

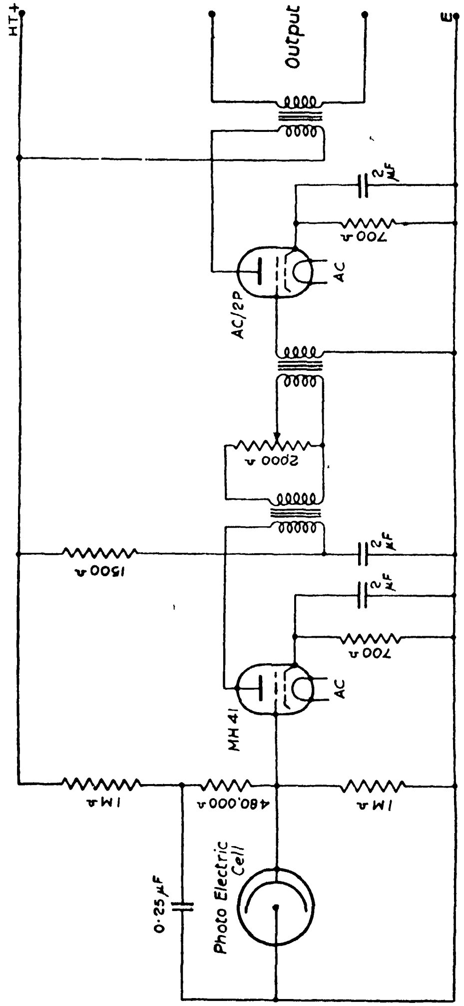

[A.T. & E. Co.

FIG. 246.

valve is biased on its grid so that when the output of the photo-electric cell is zero, there is no current from the anode and the oscillations on its screen thus have no effect. The photo-electric cell is coupled to the control grid so that, when light falls on the cell, the negative bias is reduced to normal,

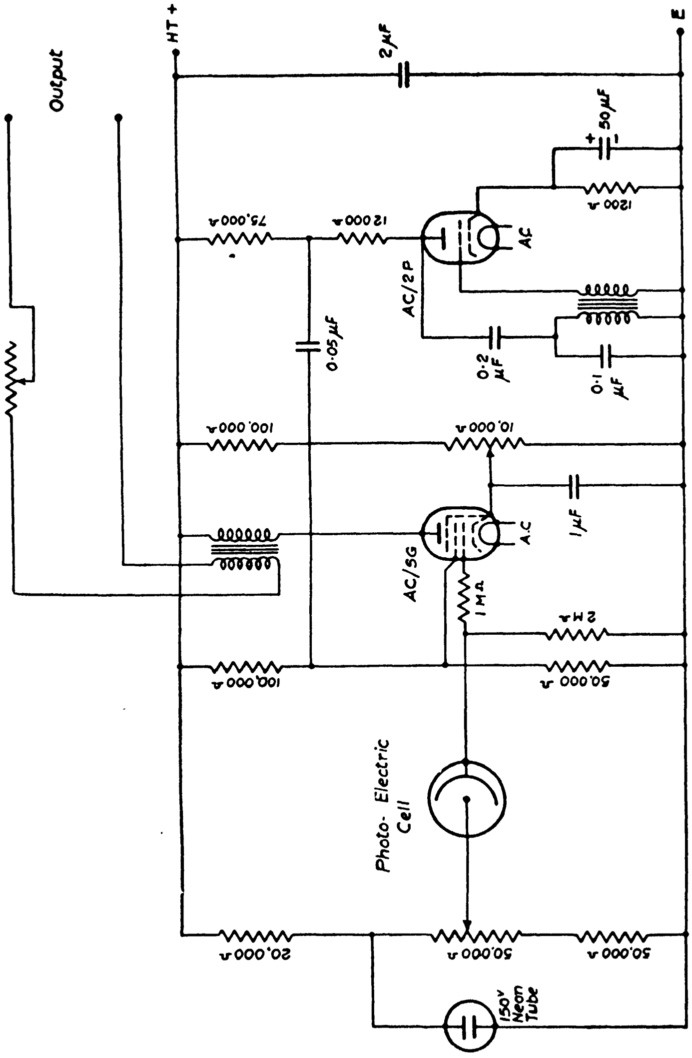

Fig. 247.

[A.T. & E. Co.

thereby establishing the anode current. This current is modulated by the screened grid at the impulse frequency to be employed for transmission, so that the desired output wave-form is obtained. The 150-volt neon tube is employed to stabilize the potential of the photo-electric cell, thus compensating to some extent for variations of the supply voltage.

The receiving circuit is shewn in Fig. 248, which renders the current flowing through the milliammeter dependent upon

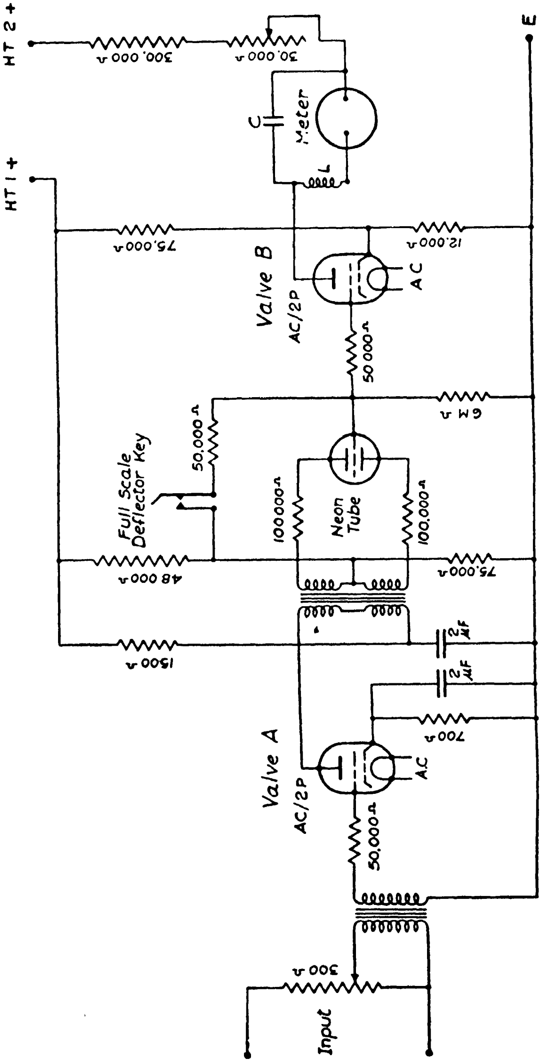

[A.T. & E. Co.

FIG. 248.

the time ratio of the transmitted currents and sensibly independent of the amplitude of these impulses. The transmitted impulses are amplified by the valve A to a level sufficient for the striking of the three-electrode neon tube, the latter being fed from the secondary of a step-up transformer in series with the 100,000-ohm resistors shewn. The grid of amplifying valve B is strongly overbiased, by means of the resistance in its cathode circuit, when the neon tube is not striking. When, however, the latter receives an impulse from the anode of valve A, it strikes and a heavy positive potential is applied to the grid of valve B *via* the transformer and the conducting neon gas. It will be seen that the centre point of the transformer secondary is anchored to a constant potential by means of the potentiometer resistance connected across the H.T. supply. This positive swing, due to the impulses transmitted from the photo-electric cell, permits corresponding amplified current impulses to flow from the anode of valve B into a well-damped moving-coil ammeter. This instrument is provided with a smoothing circuit consisting of an inductance L, in series therewith, and a capacitance C, shunting this combination. Thus the instrument is enabled to indicate the mean current.

A high external resistor is connected in series with the anode circuit of valve B, the ohmic value of this resistance being sufficient to swamp the valve impedance so that any variation of the latter has a negligible effect upon the total impedance of this circuit. Moreover, since the grid of this valve is swung heavily positive by the incoming signal, the valve impedance is itself maintained constant due to saturation. If, now, the H.T. voltage is kept constant, it will be evident that the anode current impulses must also be constant. Hence the amplitude of the incoming current impulses from valve A, whether large or small, are cut to a standard pattern by valve B. The reading of the instrument, therefore, depends solely upon the time ratio of the impulses transmitted from the photo-electric cell, and the accuracy of the reading is thus independent of any current attenuation, due to distributed leakage, in the telephone line.

Adjustment of the moving-coil instrument is made by closing the full-scale deflector key (Fig. 248), which applies the same positive potential to the grid of valve B as would be applied if the neon tube glowed continuously. With this key closed,

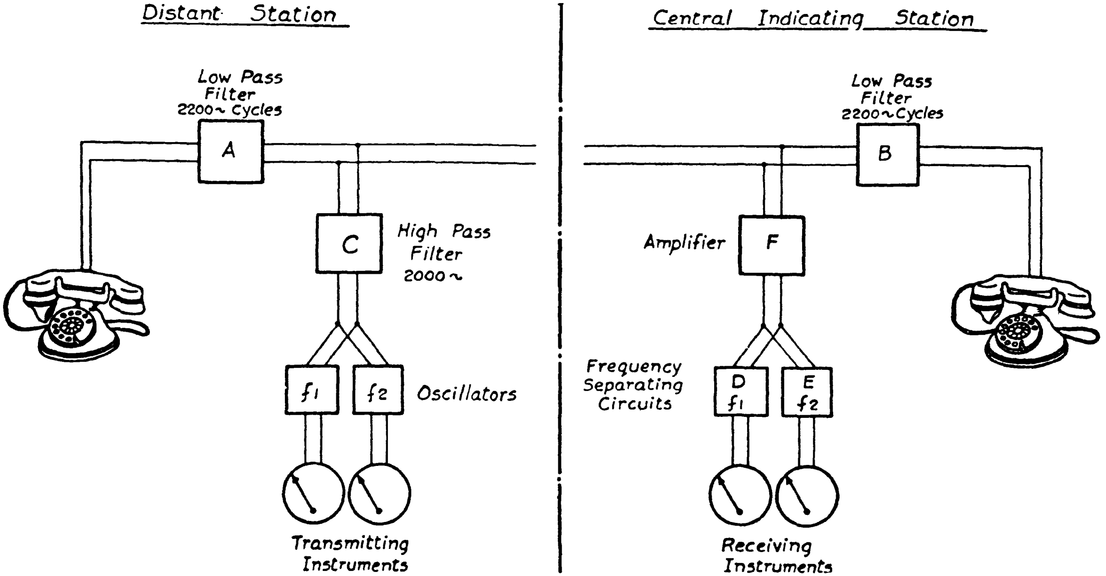

FIG. 249.

[A.T. & E. Co.

the adjustable resistor in the anode circuit of valve B is varied until the instrument gives full-scale deflection.

Fig. 249 shews the arrangement for the transmission of speech and meter readings simultaneously over a single channel. The telemeters operate at frequencies higher than the speech band, the telemetering impulses being rejected from the telephone instruments by means of the low-pass filters A and B. At the transmitting station a high-pass filter rejects speech frequencies and at the receiving station a common amplifier F amplifies all the telemetering impulses which are then passed to their appropriate instruments by means of filters, such as D and E.

Applications.—The systems of supervisory control, indication and metering above described are very largely employed by the Central Electricity Board. In addition to circuit breaker control and indication, this type of equipment is used for many other purposes, but the principles of operation by means of relays and uniselector gear are substantially the same. As an example of the comprehensiveness of the gear, the installation of the Galloway Water Power Co. is of great interest. This system comprises the following hydro-electric power stations :

Power Station.	Number of Generators.	Total Plant Capacity. kW.
Tongland . . .	3	33,000
Glenlee . . .	2	24,000
Kendoon . . .	2	21,000
Earlstoun . . .	2	12,000
Carsfad . . .	2	12,000

The scheme was primarily designed to supply power to the Central Electricity Board's system during periods of peak load, and thus forms an important part of the Southern Scottish Area. All the stations are interconnected and the first three have direct connexions to the Central Electricity Board's transmission system and are attended stations. Earlstoun and Carsfad are unattended and remote controlled from Glenlee.

The facilities and operations performed by the supervisory remote control gear include the following : Remote control and indication of circuit breakers, transformer tap-changing gear and water intake gates. Starting, speed- and excitation-control, synchronizing and shutting down of generators.

Telephone communication. Indications of water levels, meter readings, water intake gate and valve positions, alarm signals of high generator temperatures and lubricating oil flow.

It will be evident that practically every system operation is performed by the supervisory gear.

BIBLIOGRAPHY

The more important references have been marked with as asterisk.

Control of A.C. Generators

(1)*" Exciter Instability." R. E. Doherty, *Trans. Amer. I.E.E.* 1922, Vol. 41, p. 767.

(2) " Excitation Systems—Their Influence on Short Circuits and Maximum Power." R. E. Doherty, *Trans. Amer. I.E.E.*, 1928, Vol. 47, p. 945.

(3)*" Voltage Control of Large Alternators." H. W. Taylor, *Journal I.E.E.*, 1930, Vol. 68, p. 317.

(4) " The Stability Characteristics of Alternators and of Large Interconnected Systems." W. D. Horsley, *Journal I.E.E.*, 1935, Vol. 77, p. 577.

(5) " The Direct-Acting Generator Voltage Regulator." W. K. Boice, S. B. Crary, Gabriel Kron and L. W. Thompson, *Trans. Amer. I.E.E.*, 1940, Vol. 59, p. 149.

(6) " Electronic Regulator for A.C. Generators." F. H. Gulliksen, *Trans. Amer. I.E.E.*, 1934, Vol. 53, p. 877.

(7)*" Applications of the Hot-Cathode Grid-Controlled Rectifier, or Thyratron." A. L. Whiteley, *Journal I.E.E.*, 1936, Vol. 78, p. 516.

(8) " Incremental Loading of Generating Stations." M. J. Steinberg and T. H. Smith, *Electrical Engineering* (*Journal Amer. I.E.E.*), 1933, Vol. 52, p. 674.

(9) " The Theory of Incremental Rates and Their Practical Application to Load Division." M. J. Steinberg and T. H. Smith, *Electrical Engineering* (*Journal Amer. I.E.E.*), 1934, Vol. 53, part 1, p. 432; part 2, p. 571.

(10)*" An Effective Load Dividing Device." H. H. Johnson and M. S. Umberhauer, *Edison Electric Institute Bulletin,* August 1939, p. 385.

(11)*" Load Distribution between Interconnected Power Stations." P. G. Kaufmann, *Journal I.E.E.*, 1943, Vol. 90 (part 2), p. 119.

Control of Power by Reactance

(12) " Calculation of Synchronous Machine Constants." L. A. Kilgore, *Trans. Amer. I.E.E.*, 1931, Vol. 50, p. 1201.

(13) " Standard Decrement Curves." W. C. Hahn and C. F. Wagner, *Trans. Amer. I.E.E.*, 1932, Vol. 51, p. 353.

(14) " Parallel Operation of Power Stations." J. S. Peck, *Journal I.E.E.*, 1917, Vol. 55, p. 61.

(15)*" The Control of Large Amounts of Power." E. B. Wedmore, *Journal I.E.E.*, 1918, Vol. 56, p. 269.

(16) " Synchronized at the Load—A Symposium on New York City 60-Cycle Power System Connexions." A. H. Kehoe, S. B. Griscom, H. R. Searing and G. R. Milne, *Trans. Amer. I.E.E.*, 1929, Vol. 48, p. 1079.

(17) "Three-Winding Transformer Ring-Bus Characteristics." G. W. Bills and C. A. MacArthur, *Trans. Amer. I.E.E.*, 1942, Vol. 61, p. 848.

(18) "Short-Circuit Rating and Testing of Reactors." J. G. Wellings and R. V. Wheeler, *Journal I.E.E.*, 1942, Vol. 89 (part 2), p. 473.

Circuit Breakers and Circuit Interruption

(19) "Circuit-Breaker Recovery Voltages—Magnitudes and Rates of Rise." R. H. Park and W. F. Skeats, *Journal Amer. I.E.E.*, December 1930, p. 1017.

(20) "Restriking Voltage, and its Import in Circuit-breaker Operation." H. Trencham and K. J. R. Wilkinson, *Journal I.E.E.*, 1937, Vol. 80, p. 460.

(21)*"Some Notes on the Rates of Rise of Restriking Voltage Subsequent to Interruption of Alternating-Current Power Circuits." C. H. Flurcheim, *Journal I.E.E.*, 1935, Vol. 76, p. 323.

(22) "A Method for Determining the Restriking Characteristics of Power Networks whilst in Service." C. Dannatt and R. A. Polson, *Journal I.E.E.*, 1941, Vol. 88 (part 2), p. 41.

(23) "Practical Application of Circuit Transient Recovery Voltages." J. A. Adams, W. F. Skeats, R. C. Van Sickle and T. G. A. Sillers, *Trans. Amer. I.E.E.*, 1942, Vol. 61, p. 771.

(24) "Transient Recovery Voltages and Circuit Breaker Performance." R. C. Van Sickle, *Trans. Amer. I.E.E.*, 1942, Vol. 61, p. 804.

(25) "Restriking Voltage as a Factor in the Performance, Rating and Selection of Circuit-Breakers." J. A. Harle and R. W. Wild, *Journal I.E.E.*, 1944, Vol. 91 (part 2), p. 469.

(26) "Tests and Analysis of Circuit-Breaker Performance when Switching Large Capacitor Banks." T. W. Shroeder, E. W. Boehne and J. W. Butler, *Trans. Amer. I.E.E.*, 1942, Vol. 61, p. 821.

(27)*"Switching Overvoltage Hazard Eliminated in High-Voltage Oil Circuit Breakers." L. F. Hunt, E. W. Boehne and H. A. Peterson, *Trans. Amer. I.E.E.*, 1943, Vol. 62, p. 98.

(28) The following papers give the results of researches carried out by The British Electrical and Allied Industries Research Association to investigate characteristics of restriking voltages at various locations in power systems:

Journal I.E.E., 1939, Vol. 84, pp. 269 and 672.
Ibid., 1940, Vol. 86, p. 248.
Ibid., 1940, Vol. 87, p. 163.
Ibid., 1941, Vol. 88, p. 121.

(29) The following papers record recent American progress in the development of oil-less circuit-breakers:

(*a*) Water-breakers.
Trans. Amer. I.E.E., 1940, Vol. 59, p. 111 ("H" breaker adapted to water for rupturing capacities up to 1,500 MVA.)
Trans. Amer. I.E.E., 1941, Vol. 60, p. 85.

(*b*) Air-blast breakers.
Trans. Amer. I.E.E., 1940, Vol. 59, pp. 503, 510 and 522.*
Ibid., 1941, Vol. 60, pp. 193, 197 and 217.
Ibid., 1942, Vol. 61, pp. 235, 859 and 869.

Trans. Amer. I.E.E., 1943, Vol. 62, pp. 188 and 302. *Ibid.*, 1944, Vol. 63, p. 140.

(30) " Apparatus used for High-Power Switchgear Testing." J. S. Cliff, *Journal I.E.E.*, 1937, Vol. 80, p. 593.

(31) " Synthetic Testing of Circuit Breakers." K. J. R. Wilkinson and J. R. Mortlock, *Journal I.E.E.*, 1942, Vol. 89 (part 2), p. 137.

(32) " The Oil-Blast Circuit-Breaker." D. C. Prince and W. F. Skeats, *Trans. Amer. I.E.E.*, 1931, Vol. 50, p. 506.

(33) " Circuit-Breaker Field Tests on Standard and Oil-Blast Explosion-Chamber Oil Circuit-Breakers." R. M. Spurck and H. E. Strang, *Trans. Amer. I.E.E.*, 1931, Vol. 50, p. 513.

(34)*" Extinction of an A.C. Arc." J. Slepian, *Trans. Amer. I.E.E.*, 1928, Vol. 47, p. 1398.

(35) " Some Notes on Oil Circuit-Breaker Design and Performance." H. Pearce and T. T. Evans, *Journal I.E.E.*, 1932, Vol. 71, p. 703.

(36) " Metal-Clad Switchgear, Automatic Protection and Remote Control." H. W. Clothier, *Journal I.E.E.*, 1932, Vol. 71, p. 285.

(37)*" Safeguards against Interruptions of Supply." H. W. Clothier, B. H. Leeson and H. Leyburn, *Journal I.E.E.*, 1938, Vol. 82, p. 445.

(38)*" The Development of the Single-Break Oil Circuit-Breaker for Metal-clad Switchgear." D. R. Davies and C. H. Flurcheim, *Journal I.E.E.*, 1936, Vol. 79, p. 129.

(39)*" The Current-limiting Power Fuse." D. C. Prince and E. A. Williams, *Trans. Amer. I.E.E.*, 1939, Vol. 58, p. 11.

(40) " Voltages Produced by the Current-Limiting Power Fuse." E. A. Williams and C. L. Shuck, *Trans. Amer. I.E.E.*, 1941, Vol. 60, p. 214.

(41) " The High-Rupturing-Capacity Cartridge Fuse, with Special Reference to Short-Circuit Performance." J. W. Gibson, *Journal I.E.E.*, 1941, Vol. 88 (part 2), p. 2.

(42)*" A High-Voltage High-Rupturing-Capacity Cartridge Fuse and its Effect on Protection Technique." K. Dannenberg and W. J. John, *Journal I.E.E.*, 1942, Vol. 89 (part 2), p. 565.

(43) " A New High-Interrupting Capacity Fuse for Voltages Through 138 kV." H. H. Farnoe, *Trans. Amer. I.E.E.*, 1943, Vol. 62, p. 630.

(44) " A New Three-Element Current-Limiting Power Fuse." H. L. Rawlins and H. H. Farnoe, *Trans. Amer. I.E.E.*, 1944, Vol. 63, p. 156.

(45) " Oil-less Metal-clad Switchgear for Medium-voltage Alternating-current Circuits up to 660 volts, 3-phase." H. E. Cox and L. Drucquer, *Journal I.E.E.*, 1940, Vol. 87, p. 461.

(46)*" Air-Blast Circuit Breakers." A. R. Blandford, *Journal I.E.E.*, 1943, Vol. 90 (part 2), p. 411.

(47)*" The Influence of Resistance Switching on the Design of High-Voltage Air-Blast Circuit Breakers." H. E. Cox and T. W. Wilcox, *Journal I.E.E.*, 1944, Vol. 91 (part 2), p. 483.

(48) " High-Speed Oil Circuit-Breakers : Interpretation of ' Single-Loop ' Oscillograms." E. E. I. Pilcher, *Journal I.E.E.*, 1939, Vol. 85, p. 143.

Power Station Switchgear Arrangements

(49)*" Fire Precautions in Major Electrical Stations." F. C. Winfield, *Journal I.E.E.*, 1937, Vol. 81, p. 289.

(50)*" The Efficient Rating and Disposition of Supply Apparatus on High Voltage Urban Systems." J. Eccles, *Journal I.E.E.*, 1937, Vol. 81, p. 229.

(51) " Fulham Base-Load Power-Station : Mechanical and Electrical Considerations." W. C. Parker and H. Clarke, *Journal Inst. C.E.*, 1938, Vol. 9 (Paper No. 5171), p. 17.

(52) " The Design and Operation of Hams Hall Power Station." F. W. Lawton, *Journal I.E.E.*, 1939, Vol. 85, p. 469.

Interconnexion of Power Stations

(53)*" Control of Voltage and Power Factor on Interconnected Systems." O. Howarth, *Journal I.E.E.*, 1935, Vol. 76, p. 353.

(54) " Stability of Large Power Systems." F. H. Clough, *Journal I.E.E.*, 1927, Vol. 65, p. 653.

(55) " Interconnection of Power Stations." L. Romero and J. B. Palmer, *Journal I.E.E.*, 1922, Vol. 60, p. 287.

(56) " Some Problems in the Operation of Power Plants in Parallel." E. C. Stone, *Trans. Amer. I.E.E.*, 1919, Vol. 38, p. 1651.

(57) " Methods of System Control in a Large Interconnection." Earl Wild, *Trans. Amer. I.E.E.*, 1941, Vol. 60, p. 232.

(58) " Control of Tie-Line Power Swings." C. Concordia, H. S. Shott and C. N. Weygandt, *Trans. Amer. I.E.E.*, 1942, Vol. 61, p. 306.

Apparatus for Interconnector Control

(59)*" Applications and Construction of Transformer On-load Tap-changing Gear." H. Diggle, *Journal I.E.E.*, 1937, Vol. 81, p. 330.

(60) " Characteristics of Interconnected Power Systems as Affected by Transformer Ratio Control." L. F. Blume, *Trans. Amer. I.E.E.*, 1927, Vol. 46, p. 590.

(61)*" Controlling Power Flow with Phase Shifting Equipment." W. J. Lyman, *Trans. Amer. I.E.E.*, 1930, Vol. 49, p. 825.

(62) " The Application of Automatic Voltage and Switch Control to Electrical Distribution Systems." W. Kidd and J. L. Carr, *Journal I.E.E.*, 1934, Vol. 74, p. 285.

(63)*" Tap Changing under Load for Voltage and Phase Angle Control." H. B. West, *Trans. Amer. I.E.E.*, 1930, Vol. 49, p. 839.

(64) " Transformers with Load Ratio Control." A. Palme, *Trans. Amer. I.E.E.*, 1931, Vol. 50, p. 172.

(65) " The Moving-Coil Voltage Regulator." E. T. Norris, *Journal I.E.E.*, 1938, Vol. 83, p. 1.

(66)*" The Application of the Induction Voltage Regulator." W. E. M. Ayres, *Journal I.E.E.*, 1931, Vol. 69, p. 1208.

(67) " The Use of Induction Regulators in Feeder Circuits." L. H. A. Carr, *Journal I.E.E.*, 1925, Vol. 63, p. 864.

Principles of Supervisory Control

(68) "Control Rooms and Control Equipment of the Grid System." J. D. Peattie, *Journal I.E.E.*, 1937, Vol. 81, p. 607.

(69)*"Remote Control of Power Networks." G. A. Burns and T. R. Rayner, *Journal I.E.E.*, 1936, Vol. 79, p. 95.

(70) "Some Electrical Methods of Remote Indication." C. Midworth and G. F. Tagg, *Journal I.E.E.*, 1933, Vol. 73, p. 33.

Books

(71) "The Switchgear Handbook."
Vol. 1. Apparatus (1938).
Vol. 2. Application (1940).
Edited by W. A. Coates and H. Pearce.

(72) "Electrical Power Transmission and Interconnection." C. Dannatt and J. W. Dalgleish.

(73) "Symmetrical Components." C. F. Wagner and R. D. Evans.

(74) "Applications of the Method of Symmetrical Components." W. V. Lyon.

(75) "The Calculation of Unsymmetrical Short-Circuits." H. Rissik.

(76)*"Economy Loading of Power Plants." M. J. Steinberg and T. H. Smith.

INDEX